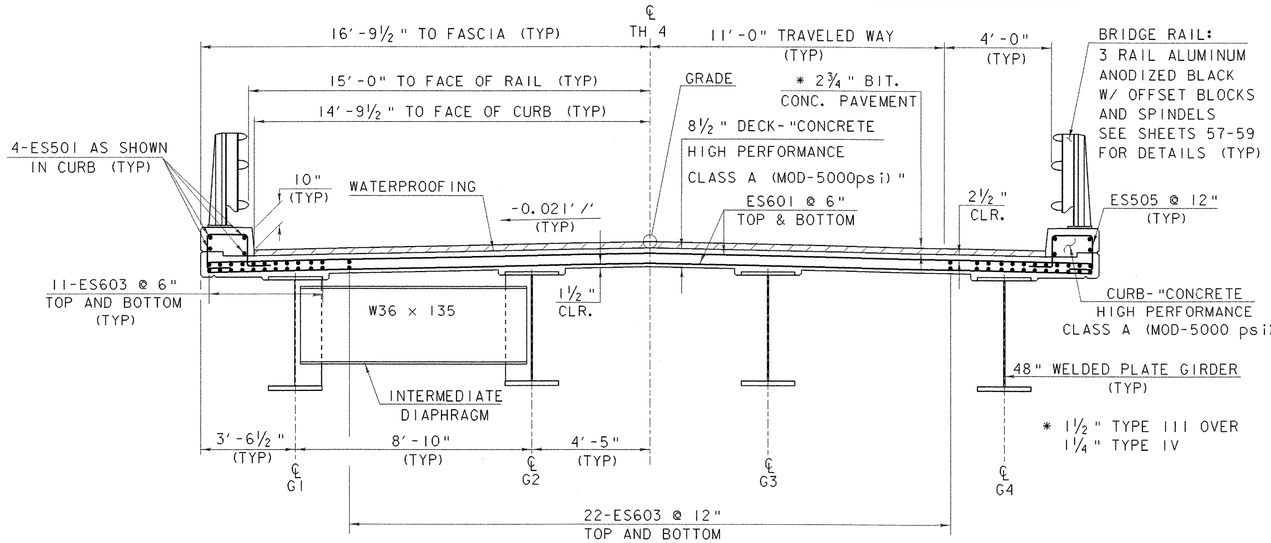

TYPICAL BRIDGE SECTION MAINSPAN (SPAN #2)

SCALE ⅜" = 1'-0

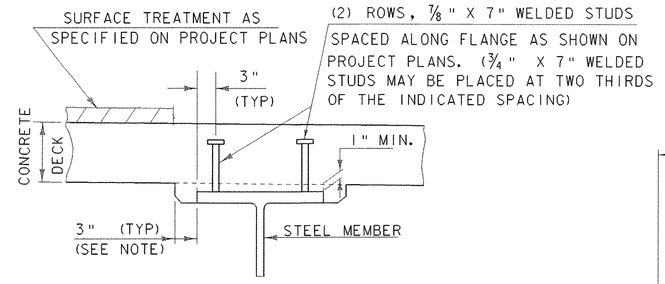

NOTE: THE 3" HORIZONTAL SECTION MAY BE ELIMINATED FOR FORMING SYSTEMS DESIGNED FOR THE CONSTRUCTION OF VERTICAL HAUNCHES. SYSTEMS SHALL BE SUBMITTED FOR APPROVAL TO THE STRUCTURES ENGINEER. ALL VOIDS SHALL BE FILLED WITH MORTAR, TYPE IV OR AN EQUIVALENT PRODUCT FROM THE APPROVED PRODUCTS LIST.

HAUNCH AND SHEAR CONNECTOR DETAILS

NTS

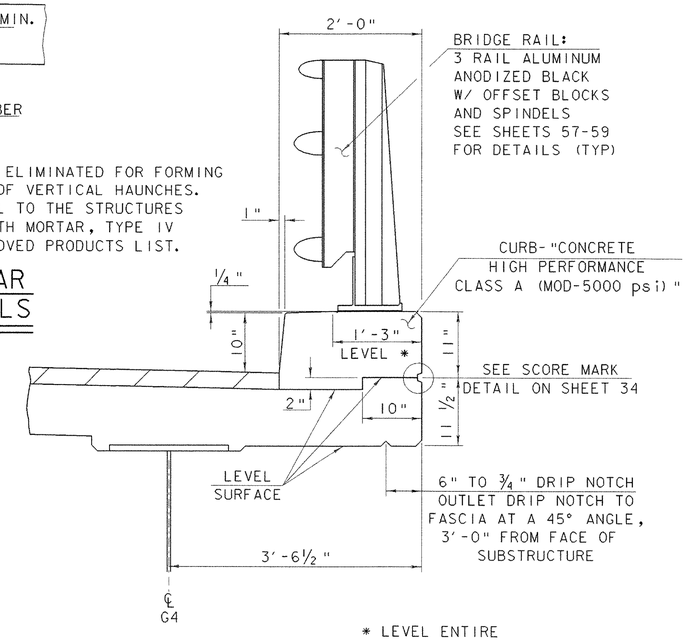

* LEVEL ENTIRE LENGTH OF BRIDGE

CURB DETAIL

SCALE 1" = 1'-0

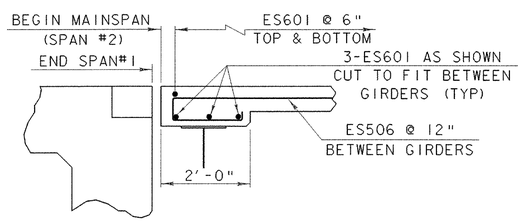

SECTION A-A

NTS

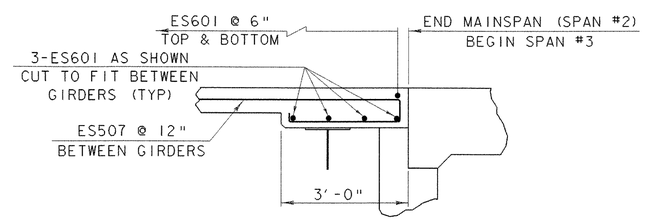

SECTION B-B

NTS

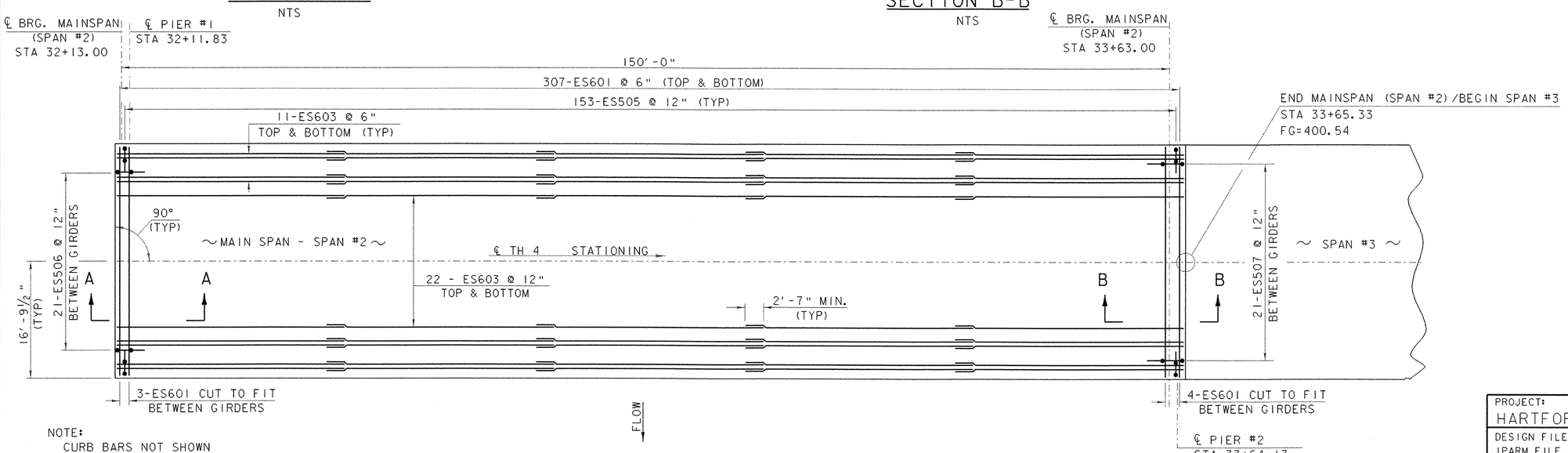

NOTE:
CURB BARS NOT SHOWN (SEE SHEET 55 FOR CURB BAR DETAILS)

MAINSPAN (SPAN #2) REINFORCING PLAN

SCALE ⅛" = 1'-0

SCALE ⅛" = 1'-0
10 2 4 6 8

SCALE ⅜" = 1'-0
1 0 1 2 3 4

SCALE 1" = 1'-0
1 9 6 3 0 1 2

PROJECT: HARTFORD	PROJECT NO.: BRO-BTN 2004 (1)

DESIGN FILE NAME: 89J045/structures/sj045msup.dgn
IPARM FILE NAME: sj045deckplan.i — PLOT DATE: 11-FEB-2005
DESIGNED BY: K. M. HIGGINS — DRAWN BY: T. HUSK
SQUAD LEADER: C. P. WILLIAMS — CHECKED BY: K. M. HIGGINS
SPAN #2 MAINSPAN REINFORCING DETAILS — SHEET: 36 OF 97