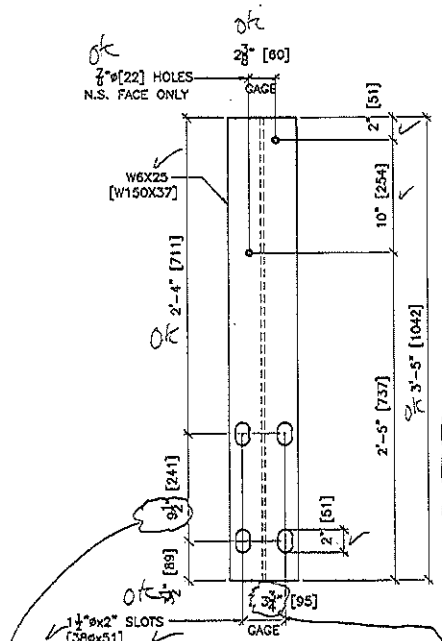

20 REQ'D. RAIL POST MARK "P1"

NOTE:
DIMENSIONS IN BRACKETS [ ] ARE METRIC (mm)

From: Andy White [mailto:andy@ccscraneservice.com]
Sent: Wednesday, March 16, 2011 3:28 PM
To: Mackintosh, Mark
Cc: Chris Chauvin; Hulett, Josh
Subject: FW: Ripton Post

Hi Mark,

Please find a revised shop drawing attached for the Ripton bridge rail posts. We have verified that the vertical spacing between anchors in the field is closer to 9 ½" than it is to 10". Also, the gage of anchors in the field varies somewhat and tends to be slightly larger than 3 5/8". I had the fabricator include both metric (SI) and US Customary units so that people can easily verify dimensions in the field with readily available tape measures, and so that structures can easily compare dimensions to the standard.

Thanks,
Andy

Andrew White, P.E.
CCS Constructors, LLC
138 Munson Ave.
Morrisville, VT 05661
802-888-7701 ext. 217
andy@ccscraneservice.com

RECEIVED
CK'D BY SGF OK'D BY SGF
MAR 18 2011
RESUBMIT _____ APPROVED AS NOTED
BY Shemard G. Jones DATE 3-18-2010

APPROVED AS NOTED PER ANDY'S EMAIL TO MARK MACKINTOSH ON MARCH 16, 2011 @ 3:28 PM
COPY IN CLOUD ABOVE.
Shemard G Jones
3-18-2011

BILL OF MATERIAL

SHIP	SHIP MARK	NO. PCS.	PIECE MARK	DESCRIPTION	LENGTH	REMARKS	MAT'L
	P1	20		W 6 X 25 [W150X37]	3'-5 [1042]	A709, GR. 50W	

FRICTION BOLTS W/NUTS				WASHERS		FINISH
DIAM.	SIZE	LENGTH	TYPE	FLAT	BEV.	

FINISH:
MATERIAL: A709, GR. 50W
HOLES: AS NOTED
ELECTRODES:
WELDS:
SURFACE PREP.:

NO.	DATE	DESCRIPTION	BY
1	3/16/11	POST APPROVAL	JAC

REVISIONS

ARC
ADVANCED RESOURCES & CONST. ENTERPRISES, INCORPORATED
P.O. BOX 120 KINGFIELD, ME 04947
PHONE (207) 265-2849 -- FAX (207) 265-4054

DRAWN JAC
DATE 3/2/11
CHECKED MTP
JOB#

POST DETAILS
RIPTON
CCS CONSTRUCTORS, LLC

PROJECT NO. FM010-1(42)
DWG. NO. 1 OF 1

FM010-1(2)
RIPTON