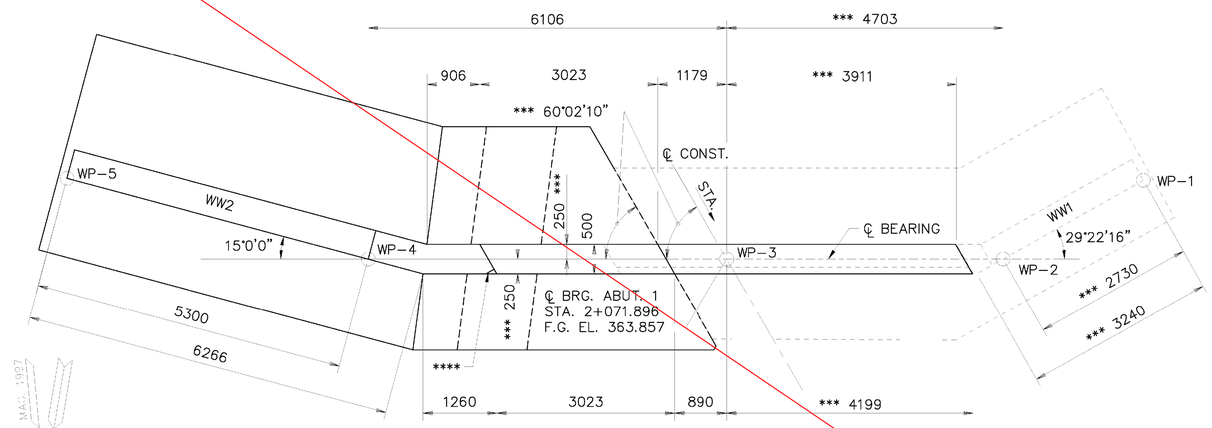

LIMITS OF REMOVAL NOT SHOWN IN PLAN VIEW FOR CLARITY.

PLAN

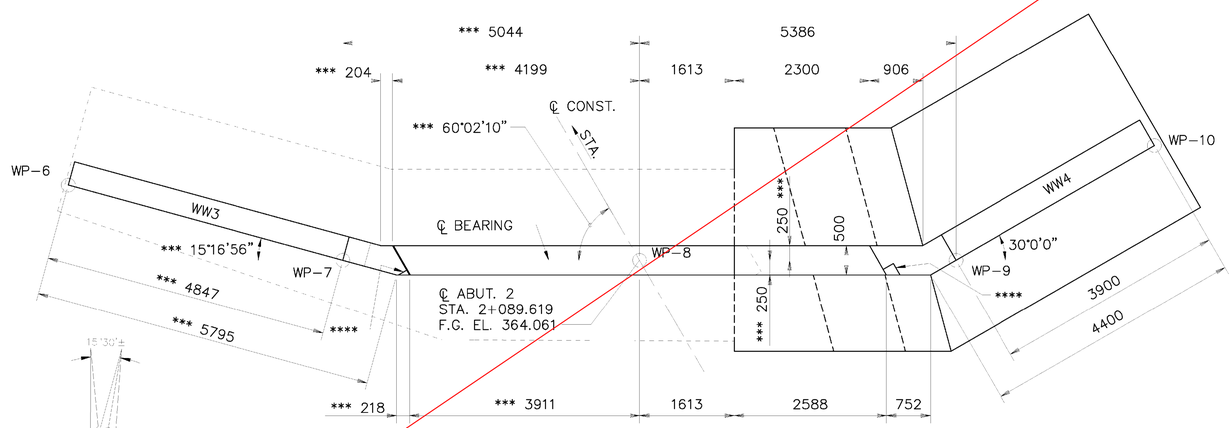

LIMITS OF REMOVAL NOT SHOWN IN PLAN VIEW FOR CLARITY.

PLAN

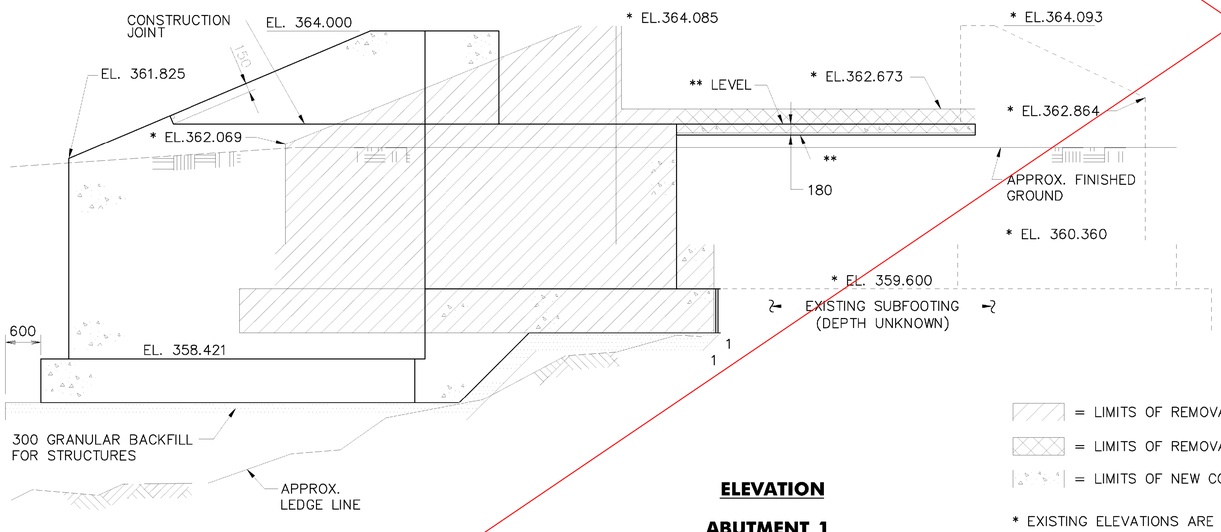

ELEVATION

ABUTMENT 1

SCALE: 1:50

0 1 2 3

SCALE IN METERS

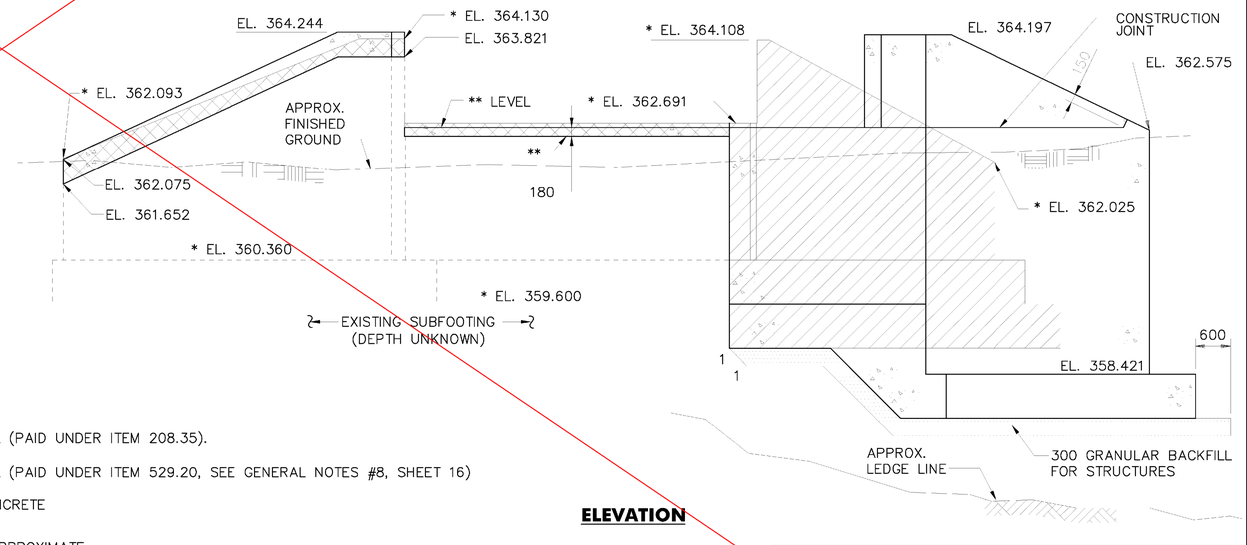

ELEVATION

ABUTMENT 2

SCALE: 1:50

0 1 2 3

SCALE IN METERS

= LIMITS OF REMOVAL (PAID UNDER ITEM 208.35).

= LIMITS OF REMOVAL (PAID UNDER ITEM 529.20, SEE GENERAL NOTES #8, SHEET 16)

= LIMITS OF NEW CONCRETE

* EXISTING ELEVATIONS ARE APPROXIMATE
** SEE GENERAL NOTE #19, SHEET 16.
*** SEE GENERAL NOTE # 3, SHEET 16.
**** BLOCKOUT WINGWALL AS REQUIRED TO ACCOMODATE BRIDGE RAIL POST.

SEE REVISED SHEET

McFarland Johnson

FOREST SERVICE U S DEPARTMENT OF AGRIC. USDA

STATE OF VERMONT
AGENCY OF TRANSPORTATION

Town Of	RIPTON	Bridge No.	BRIDGE #17
		Log Sta.	
Highway No.	TH 18	Surv. Sta.	

TH 18 OVER SOUTH BRANCH MIDDLEBURY RIVER
ABUTMENT MASONRY

Designed By	Y I LIU	Drawn By	W J GAYNOR
Checked By	B P GUZAS	Bridge Design Supervisor	R L JOY
Date	8/09	Date	10/09

PROJECT	RIPTON
PROJECT NO.	FH 010-1(2)
I.G.C. Info.	
Bridge Sheet No.	Sheet 19 of 26