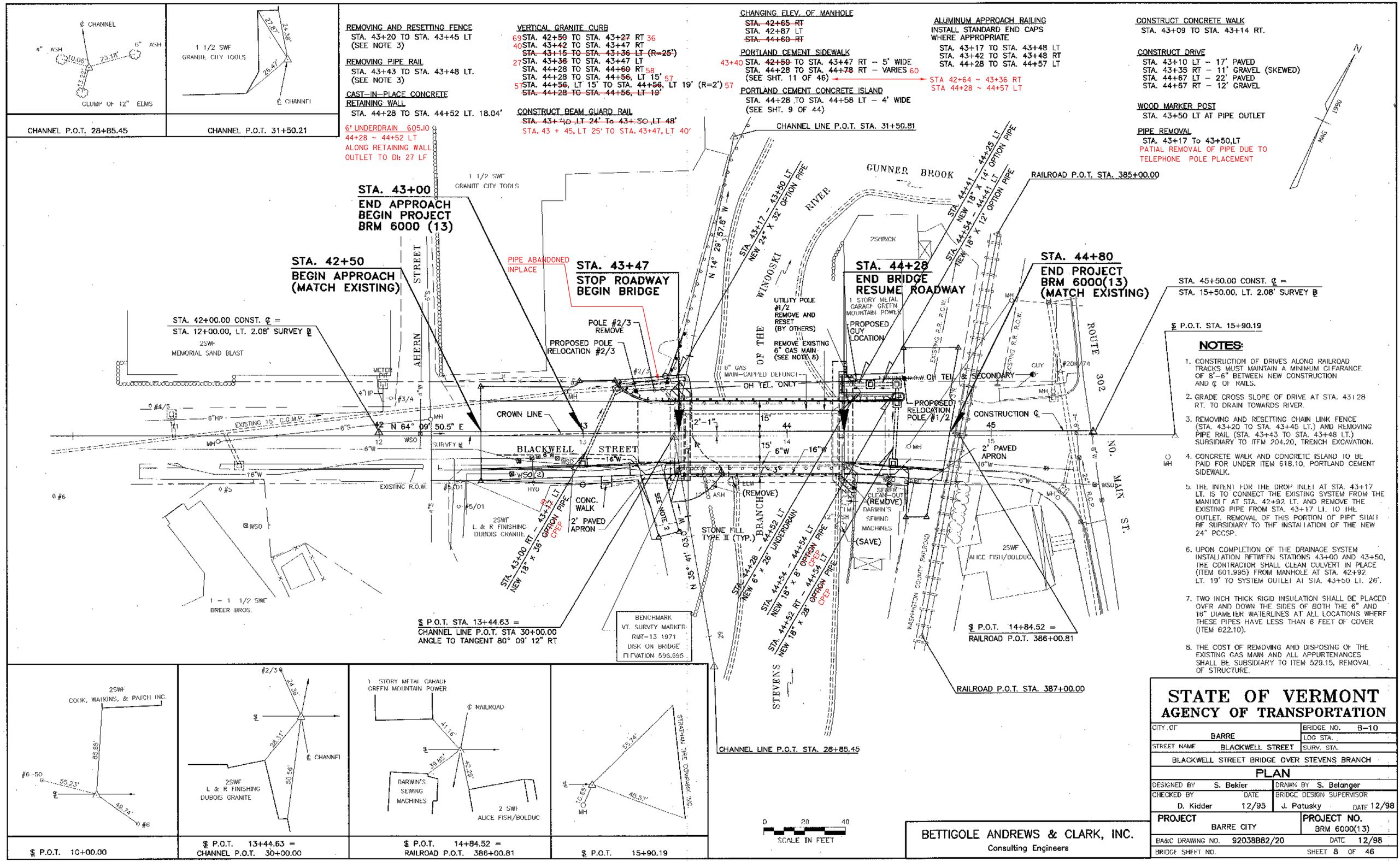

NOTES:

1. CONSTRUCTION OF DRIVES ALONG RAILROAD TRACKS MUST MAINTAIN A MINIMUM CLEARANCE OF 8'-6" BETWEEN NEW CONSTRUCTION AND ℄ OF RAILS.
2. GRADE CROSS SLOPE OF DRIVE AT STA. 43+28 RT. TO DRAIN TOWARDS RIVER.
3. REMOVING AND RESETTING CHAIN LINK FENCE (STA. 43+20 TO STA. 43+45 LT.) AND REMOVING PIPE RAIL (STA. 43+43 TO STA. 43+48 LT.) SUBSIDIARY TO ITEM 204.20, TRENCH EXCAVATION.
4. CONCRETE WALK AND CONCRETE ISLAND TO BE PAID FOR UNDER ITEM 618.10, PORTLAND CEMENT SIDEWALK.
5. THE INTENT FOR THE DROP INLET AT STA. 43+17 LT. IS TO CONNECT THE EXISTING SYSTEM FROM THE MANHOLE AT STA. 42+92 LT. AND REMOVE THE EXISTING PIPE FROM STA. 43+17 LT. TO THE OUTLET. REMOVAL OF THIS PORTION OF PIPE SHALL BE SUBSIDIARY TO THE INSTALLATION OF THE NEW 24" PCCSP.
6. UPON COMPLETION OF THE DRAINAGE SYSTEM INSTALLATION BETWEEN STATIONS 43+00 AND 43+50, THE CONTRACTOR SHALL CLEAN CULVERT IN PLACE (ITEM 601.995) FROM MANHOLE AT STA. 42+92 LT. 19' TO SYSTEM OUTLET AT STA. 43+50 LT. 26'.
7. TWO INCH THICK RIGID INSULATION SHALL BE PLACED OVER AND DOWN THE SIDES OF BOTH THE 6" AND 16" DIAMETER WATERLINES AT ALL LOCATIONS WHERE THESE PIPES HAVE LESS THAN 6 FEET OF COVER (ITEM 622.10).
8. THE COST OF REMOVING AND DISPOSING OF THE EXISTING GAS MAIN AND ALL APPURTENANCES SHALL BE SUBSIDIARY TO ITEM 529.15, REMOVAL OF STRUCTURE.

STATE OF VERMONT
AGENCY OF TRANSPORTATION

CITY OF	BARRE	BRIDGE NO.	B-10
		LOG STA.	
STREET NAME	BLACKWELL STREET	SURV. STA.	
BLACKWELL STREET BRIDGE OVER STEVENS BRANCH			
PLAN			
DESIGNED BY	S. Bekier	DRAWN BY	S. Belanger
CHECKED BY	D. Kidder DATE 12/95	BRIDGE DESIGN SUPERVISOR	J. Patusky DATE 12/98
PROJECT	BARRE CITY	PROJECT NO.	BRM 6000(13)
BA&C DRAWING NO.	92038B82/20	DATE	12/98
BRIDGE SHEET NO.		SHEET 8 OF 46	

BETTIGOLE ANDREWS & CLARK, INC.
Consulting Engineers

TEMPORARY TRAFFIC SIGN SUMMARY SHEET

SIGN NUMBER	SIGN LEGEND	NEW SIGNS: SIGN DIMENSIONS	NEW SIGNS: "A"	NEW SIGN POSTS: NUMBER OF POSTS	FLANGED CHANNEL LB/FT.: 2.5	FLANGED CHANNEL LB/FT.: 3.0	TUBULAR ALUMINUM 3.0"O/	REMARKS	STD. SHEET NUMBER
T1	SIDE ROAD WORK AHEAD	48"x48"	16	2	X				E-100A
T2	SIDE ROAD WORK 500 FT	48"x48"	16	2	X				E-121
T3	SIDE ROAD WORK AHEAD	48"x48"	16	2	X				E-160
T4	SIDE ROAD WORK 500 FT	48"x48"	16	2	X				
T5	END ROAD WORK	48"x24"	8	1	X				
T6	SIDE ROAD WORK LEFT	48"x48"	16	2	X				
T7	SIDE ROAD WORK AHEAD	48"x48"	16	2	X				
T8	END ROAD WORK	48"x24"	8	1	X				
T9	ROAD CLOSED	48"x30"	10	1	X				
T10	ROAD CLOSED	48"x30"	10	1	X				
T11	ROAD WORK 500 FT	36"x36"	9	1	X				
T12	ROAD WORK AHEAD	36"x36"	9	1	X				
T13	ROAD WORK AHEAD	36"x36"	9	1	X				
T14	ROAD WORK 500 FT	36"x36"	9	1	X				
T15	END ROAD WORK	48"x24"	8	1	X				
FINAL POST LENGTHS ARE TO BE DETERMINED IN THE FIELD. POST SIZES ARE COMPUTED BASED ON INFORMATION FURNISHED ON THE STANDARD SHEETS AND THE DESIGN DIVISION'S " SIGN POST DESIGN MANUAL ".		TOTALS	SF. 176		788				

NOTE: TEMPORARY SIGNS & POSTS ARE SUBSIDIARY TO ITEM 635.10

TRAFFIC SIGN SUMMARY SHEET

SIGN NUMBER	SIGN LEGEND	NEW SIGNS: SIGN DIMENSIONS	NEW SIGNS: "A"	NEW SIGN POSTS: NUMBER OF POSTS	FLANGED CHANNEL LB/FT.: 2.5	FLANGED CHANNEL LB/FT.: 3.0	50% STEEL LB/FT. 2.2	REMARKS	STD. SHEET NUMBER
P1	W10-3	30"x30"	6.25			14' X	X	US 302 WEST	E 163
P2	RAILROAD CROSSING	36" DIAMETER	7			14' X	X	45+30 LT	E 190
P3	RAILROAD CROSSING	48"x9"	6			14' X	X	45+10 LT	
P4	W10 3	30"x30"	6.25			14' X	X	US 302 EAST	
P5	RAILROAD CROSSING	48"x9"	6			14' X	X	44+29 RT	
P6	RAILROAD CROSSING	36" DIAMETER	7			14' X	X	43+46 RT	
P7	R7-100 (NO PARKING ANY TIME)	12"x18"	1.5			14' X	X	43+46 RT	
P8	W10-3	30"x30"	6.25			14' X	X	42+40 RT	
FINAL POST LENGTHS ARE TO BE DETERMINED IN THE FIELD. POST SIZES ARE COMPUTED BASED ON INFORMATION FURNISHED ON THE STANDARD SHEETS AND THE DESIGN DIVISION'S " SIGN POST DESIGN MANUAL ".		TOTALS	SF. 46.25			112 LF	112 LF		

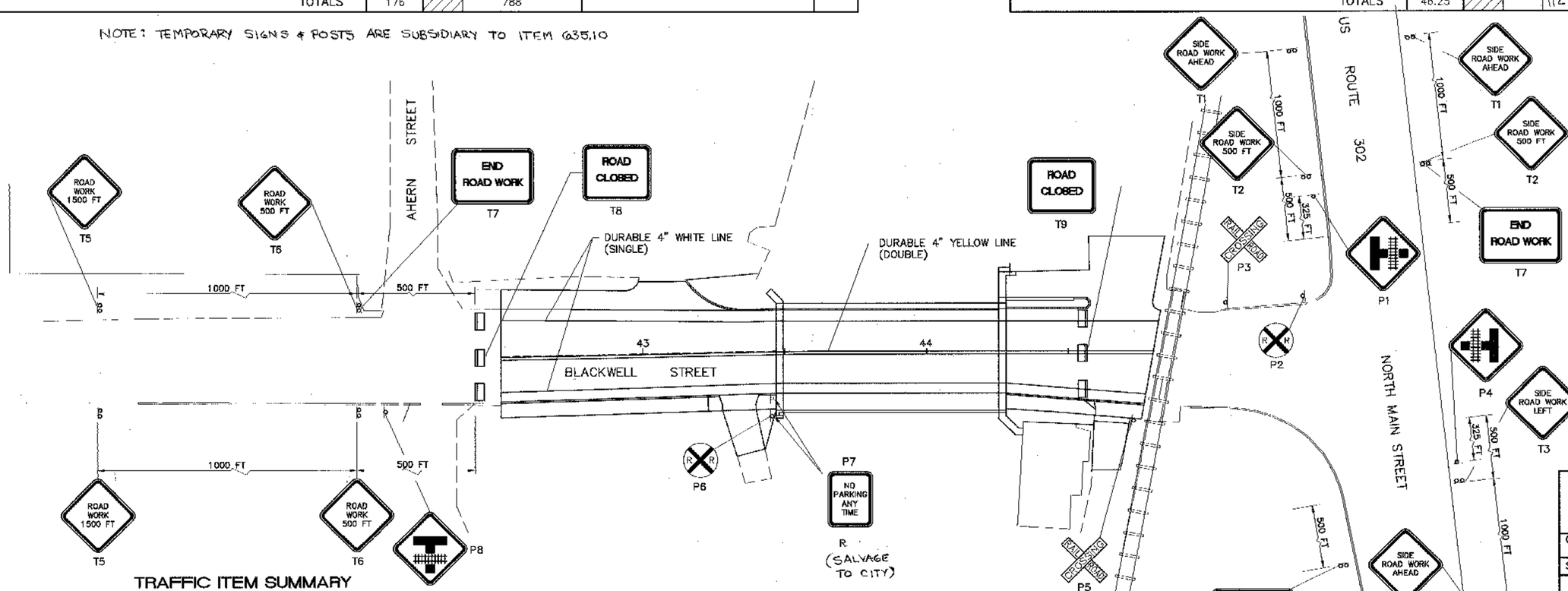

TEMPORARY 4" YELLOW LINE
~~STA. 42+50 TO STA. 44+80 (℄)~~

REMOVE AND REPLACE SIGN
STA. 43+46 (16' RT TO 22' RT)

DURABLE 4" WHITE LINE
STA. 42+50 (11' LT) TO STA. 44+83 (11' LT)
STA. 42+50 (14' RT) TO STA. 43+47 (11' RT)
STA. 43+47 (11' RT) TO STA. 44+28 (11' RT)
STA. 44+28 (11' RT) TO STA. 44+77 (15' RT)

DURABLE 4" YELLOW LINE
STA. 42+50 TO STA. 44+80 (℄) DOUBLE SOLID

LEGEND
R - REMOVE
① - SIGN NUMBER
▯ - TYPE III BARRICADE
ß - SIGN AND POSTS

TRAFFIC ITEM SUMMARY

ITEM NO.	ITEM	UNIT	QUANTITY	ROUNDING	TOTAL
646.40	DURABLE 4" WHITE LINE	LF	460	10	470
646.41	DURABLE 4" YELLOW LINE	LF	460	10	470
675.50	REMOVING SIGNS	EA	1		1
~~[illegible]~~	~~ERECTING SALVAGED SIGNS~~	~~[illegible]~~	~~[illegible]~~		~~[illegible]~~
~~[illegible]~~	~~SETTING SALVAGED POSTS~~	~~[illegible]~~	~~[illegible]~~		~~[illegible]~~

NOTE

1. CONSTRUCTION APPROACH SIGNING DISTANCE NOT TO SCALE.

BETTIGOLE ANDREWS & CLARK, INC.
Consulting Engineers

STATE OF VERMONT
AGENCY OF TRANSPORTATION

CITY OF BARRE	BRIDGE NO. B-10
STREET NAME BLACKWELL STREET	LOG STA. / SURV. STA
BLACKWELL STREET BRIDGE OVER STEVENS BRANCH	
PAVEMENT MARKINGS/TRAFFIC SIGNS	
DESIGNED BY L. Keefe	DRAWN BY R. Clark
CHECKED BY D. Kidder DATE 12/95	BRIDGE DESIGN SUPERVISOR J. Patusky DATE 12/98
PROJECT BARRE CITY	PROJECT NO. BRM 6000(13)
BA&C DRAWING NO. 92038B75/20	DATE 12/98
BRIDGE SHEET NO.	SHEET 10 OF 46

POINT NUMBER	STATION	OFFSET
WP1	43+48.00	23.92' RT.
WP2	43+48.00	0.00'
WP3	43+48.00	19.57' LT.
WP4	43+43.96	20.08' LT.

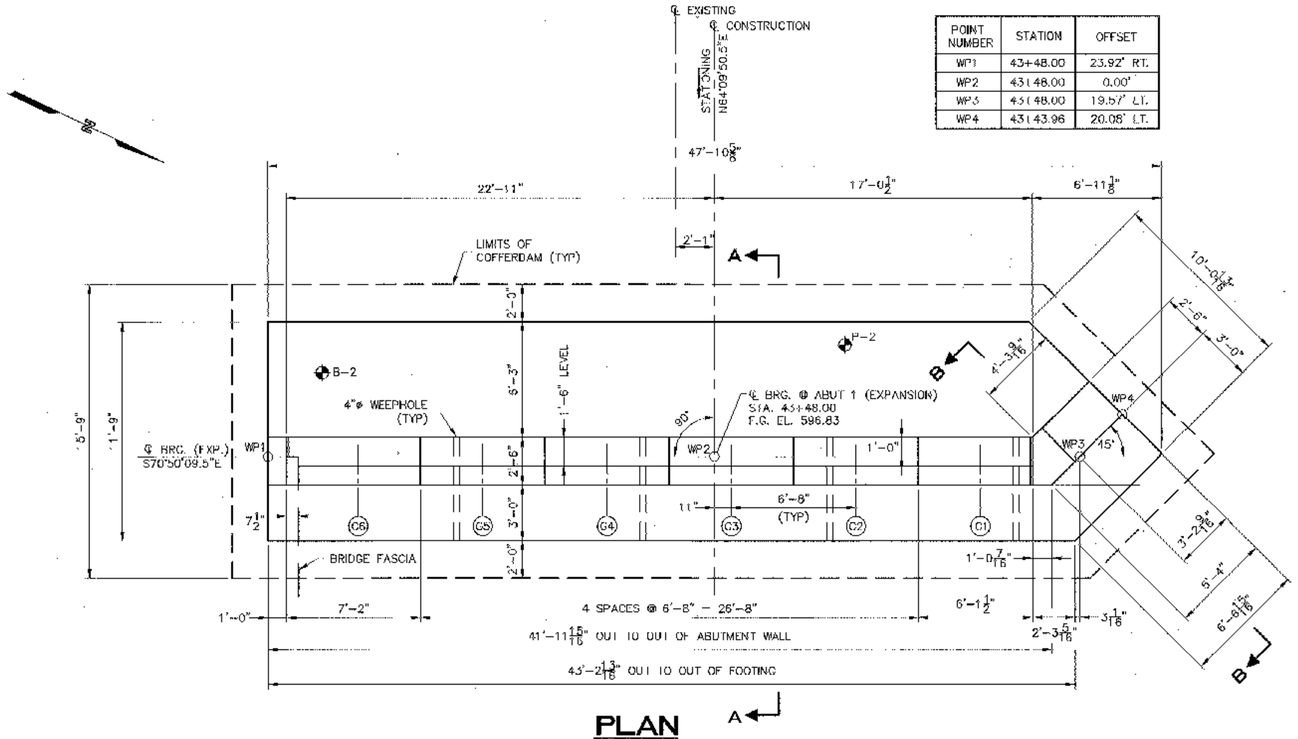

PLAN

SCALE: ¼" = 1'-0"

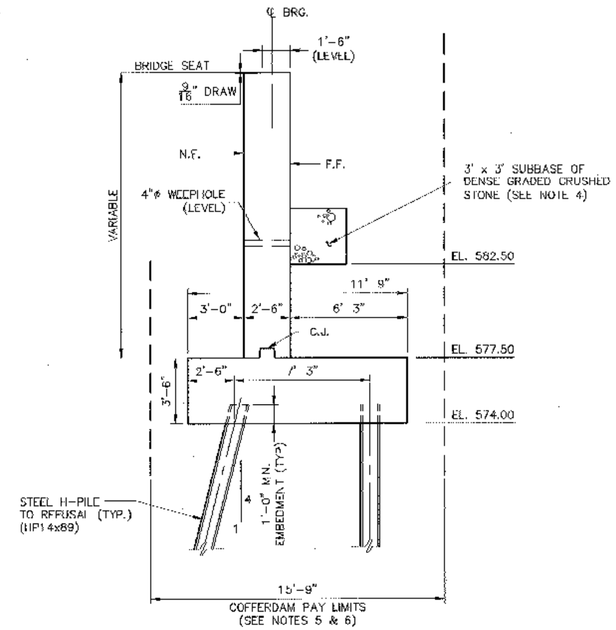

SECTION A-A

SCALE: ¼" = 1'-0"

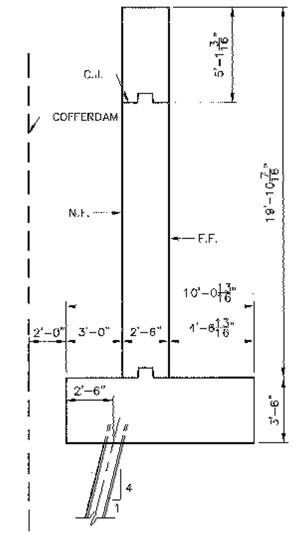

SECTION B-B

SCALE: ¼" = 1'-0"

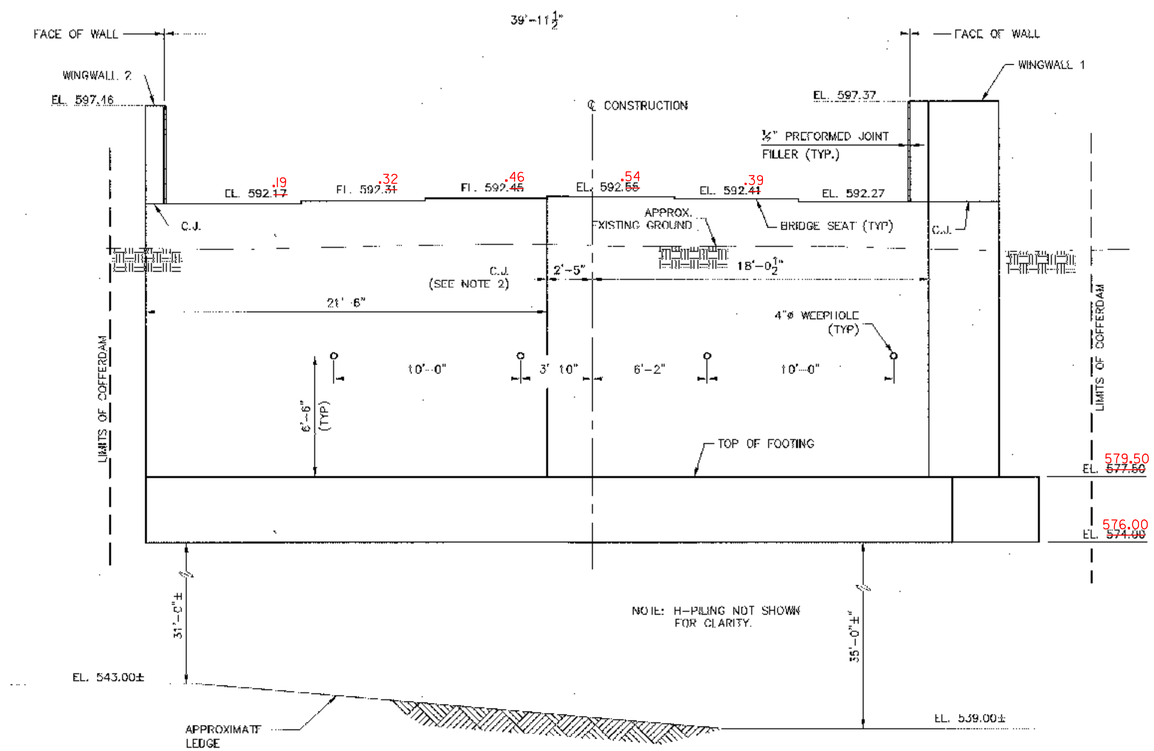

WEST ELEVATION

SCALE: ¼" = 1'-0"

NOTES:

1. FOR ABUTMENT REINFORCING, SEE BRIDGE SHEET BR113.
2. FOR CONSTRUCTION JOINT DETAIL, SEE BRIDGE SHEET BR119.
3. ABUTMENTS AND WINGWALLS SHALL BE CONSTRUCTED OF CLASS "B" CONCRETE (ITEM 501.25).
4. SUBBASE OF DENSE GRADED CRUSHED STONE SHALL BE PLACED FOR THE ENTIRE LENGTH OF BOTH WINGWALLS AND THE ABUTMENTS AND SHALL BE PAID FOR UNDER ITEM 301.35
5. THE DESIGN OF THE COFFERDAM SHALL BE THE RESPONSIBILITY OF THE CONTRACTOR AND SHALL CONFORM TO THE STATE OF VERMONT AGENCY OF TRANSPORTATION STANDARD SPECIFICATIONS FOR CONSTRUCTION 1990 AND IT'S LATEST REVISIONS.
6. COFFERDAMS ADJACENT TO EXISTING STRUCTURES SHALL BE SUFFICIENTLY SIZED AND BRACED TO SUPPORT THE STRUCTURE(S) THROUGHOUT CONSTRUCTION. DAMAGE TO EXISTING STRUCTURES SHALL BE THE RESPONSIBILITY OF THE CONTRACTOR.

LEGEND

N.F.	NEAR FACE
F.F.	FAR FACE
C.J.	CONSTRUCTION JOINT
(G1)	℄ GIRDER W/ NUMBER DESIGNATION

BETTIGOLE ANDREWS & CLARK, INC.
Consulting Engineers

STATE OF VERMONT
AGENCY OF TRANSPORTATION

CITY OF BARRE	BRIDGE NO: B-10
STREET NAME BLACKWELL STREET	LOG STA. / SURV. STA.
BLACKWELL STREET BRIDGE OVER STEVENS BRANCH	
ABUTMENT 1 MASONRY	
DESIGNED BY V. DeAngelo	DRAWN BY S. Belanger
CHECKED BY J. Patusky DATE 12/98	BRIDGE DESIGN SUPERVISOR J. Patusky DATE 12/98
PROJECT BARRE CITY	PROJECT NO. BRM 6000(13)
BA&C DRAWING NO. BLACK03/48	DATE 12/98
BRIDGE SHEET NO. BR112	SHEET 25 OF 46

POINT NUMBER	STATION	OFFSET
WP4	44+27.00	34.05' LT.
WP5	44+27.00	0
WP6	44+27.00	31.35' RT.

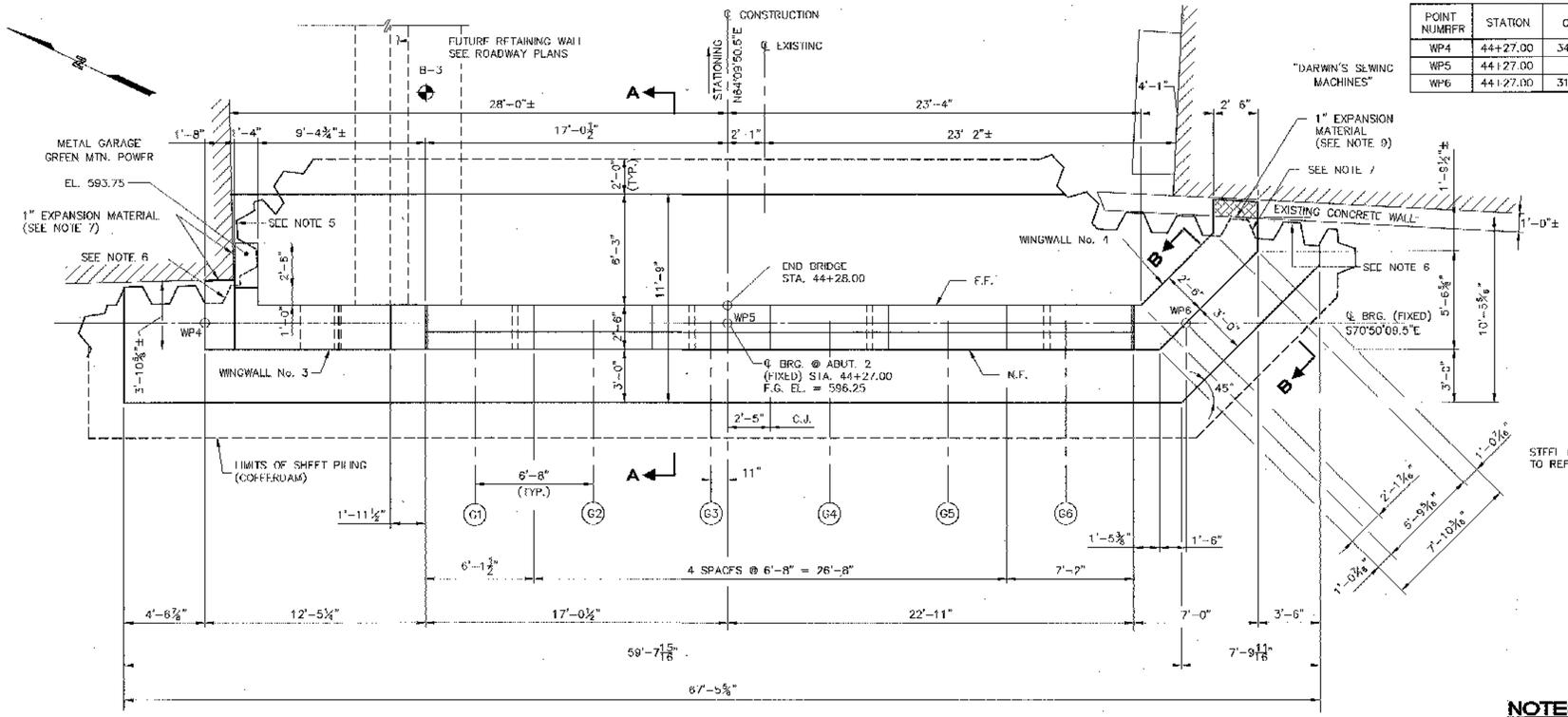

PLAN

SCALE: 1/4" = 1'-0"

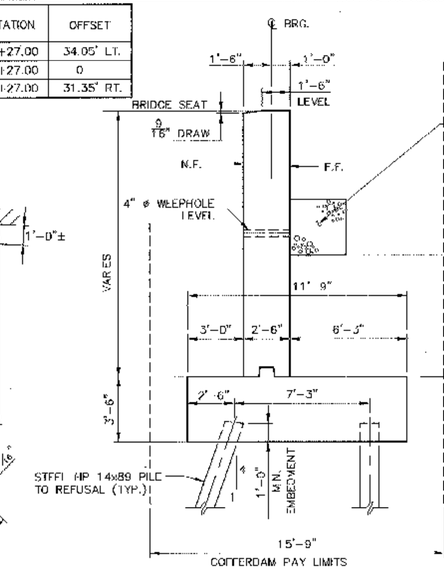

SECTION A-A

SCALE: 1/4" = 1'-0"

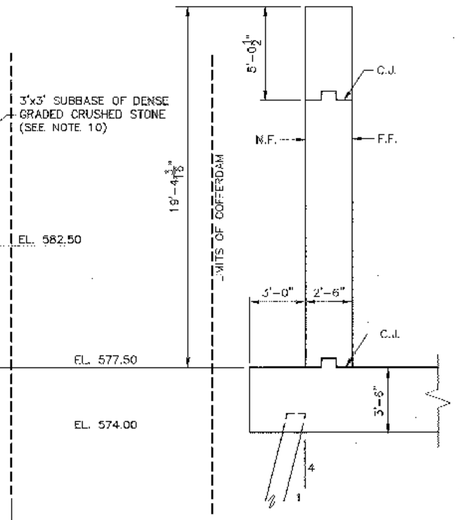

SECTION B-B

SCALE: 1/4" = 1'-0"

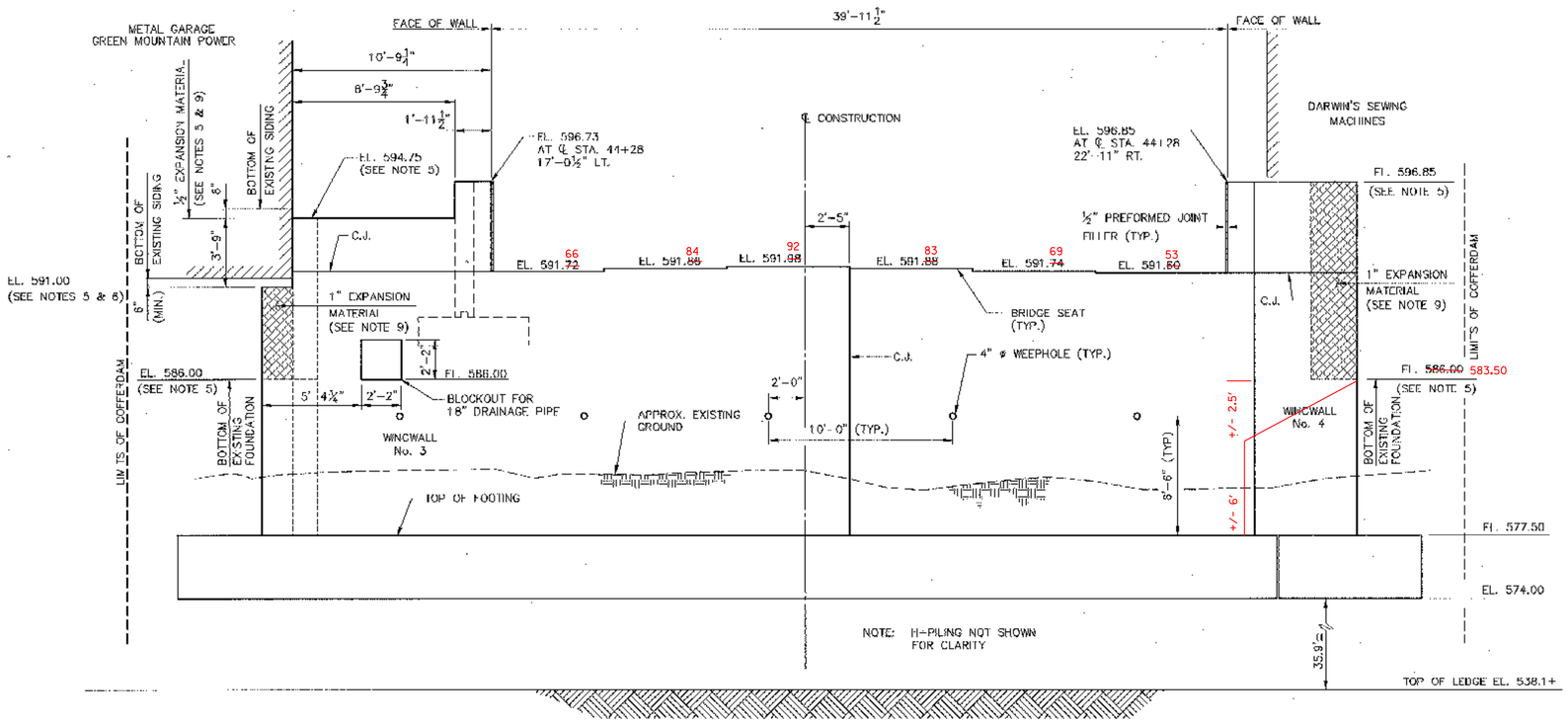

EAST ELEVATION

SCALE: 1/4" = 1'-0"

NOTES:

1. FOR ABUTMENT REINFORCING, SEE BRIDGE SHEET BR115.
2. FOR WINGWALL REINFORCING, SEE BRIDGE SHEET BR116.
3. FOR CONSTRUCTION JOINT DETAIL, SEE BRIDGE SHEET BR119.
4. BRIDGE SEAT ELEVATIONS SHOWN AT ℄ BEARING.
5. THE CONTRACTOR SHALL VERIFY ALL ELEVATIONS AND DIMENSIONS ADJACENT TO EXISTING STRUCTURES PRIOR TO THE INITIATION OF WORK.
6. THE CONTRACTOR SHALL LOCATE SHEET PILING ADJACENT TO EXISTING BUILDINGS, FOUNDATIONS AND/OR RETAINING WALLS AS CLOSE AS POSSIBLE AND OF SUFFICIENT DEPTH AS TO INSURE BUILDING AND COFFERDAM STABILITY THROUGHOUT THE CONSTRUCTION PERIOD. FIELD ADJUSTMENTS TO CONTRACT PLAN DIMENSIONS FOR COFFERDAMS MAY BE MADE ONLY WITH THE APPROVAL OF THE ENGINEER.
7. THE CONTRACTOR SHALL REMOVE SHEET PILING TO THE BOTTOM OF EXISTING BUILDING FOUNDATION AS REQUIRED TO CONSTRUCT CANTILEVERED WALLS ADJACENT TO EXISTING BUILDINGS. PRECAUTIONS SHALL BE TAKEN TO TEMPORARILY SHORE EXISTING STRUCTURES AS DIRECTED BY THE ENGINEER. TEMPORARY SHORING SHALL BE SUBSIDIARY TO ITEM 204.40, COFFERDAM. SEE SOUTHEAST CORNER DETAIL ON BRIDGE SHEET BR117.
8. ANY PORTION OF COFFERDAM REQUIRED TO BE LEFT IN PLACE DURING CONSTRUCTION OF ABUTMENT SHALL BE INCLUDED IN THE UNIT BID PRICE FOR COFFERDAM (ITEM 204.40).
9. PLACE EXPANSION MATERIAL AGAINST EXISTING CONCRETE PRIOR TO PLACEMENT OF CONCRETE FOR NEW WALLS.
10. SUBBASE OF DENSE GRADED CRUSHED STONE SHALL BE PLACED FOR THE ENTIRE LENGTH OF BOTH WINGWALLS AND THE ABUTMENTS AND SHALL BE PAID FOR UNDER ITEM 301.35
11. THE DESIGN OF THE COFFERDAM SHALL BE THE RESPONSIBILITY OF THE CONTRACTOR AND SHALL CONFORM TO THE STATE OF VERMONT AGENCY OF TRANSPORTATION STANDARD SPECIFICATIONS FOR CONSTRUCTION 1990, AND IT'S LATEST REVISIONS.
12. COFFERDAMS ADJACENT TO EXISTING STRUCTURES SHALL BE SUFFICIENTLY SIZED AND BRACED TO SUPPORT THE STRUCTURE THROUGHOUT CONSTRUCTION. DAMAGE TO EXISTING STRUCTURES SHALL BE THE RESPONSIBILITY OF THE CONTRACTOR.

LEGEND

N.F.	NEAR FACE
F.F.	FAR FACE
C.J.	CONSTRUCTION JOINT

BETTIGOLE ANDREWS & CLARK, INC.
Consulting Engineers

STATE OF VERMONT
AGENCY OF TRANSPORTATION

CITY OF BARRE	BRIDGE NO. B-10
STREET NAME BLACKWELL STREET	LOG STA. / SURV. STA.
BLACKWELL STREET BRIDGE OVER STEVENS BRANCH	
ABUTMENT 2 MASONRY	
DESIGNED BY V. DeANGELO	DRAWN BY S. BELANGER
CHECKED BY J. PATUSKY DATE 12/98	BRIDGE DESIGN SUPERVISOR J. PATUSKY DATE 12/98
PROJECT BARRE CITY	PROJECT NO. BRM 5000(13)
BA&C DRAWING NO. BLACK01/48	DATE 12/98
BRIDGE SHEET NO. BR114	SHEET 27 OF 46

ITEM	NO. PIECES	SIZE	LENGTH	MARK	TYPE	A	B	C	D	E	F	G	H	J	K	R	O
1						APPROACH SLABS (epoxy coated)											
✱ 2	43	5	19 - 6	CAS900	STR												
✱ 3	75	9	22 - 0	CAS900	1	1 - 3	19 - 6					0 - 0		1 - 0			
4																	
5						SUPERSTRUCTURE (epoxy coated)											
✱ 6	533	5	21 - 8	ES300	STR												
7	82	5	6 - 3	ES301	55	0 - 10	1 - 6	1 - 7	1 - 11			0 - 10					
8	244	5	7 - 5	ES302	2	0 - 6	6 - 11										
9	164	5	3 - 0	ES303	8	0 - 10	1 - 4					0 - 10					
10	62	5	5 - 4	ES304	16	0 - 10	3 - 7	0 - 8	2 - 3								
11	56	5	9 - 1	ES305	55	0 - 6	3 - 9	0 - 7	3 - 9			0 - 6					
12	36	5	4 - 3	ES306	2	0 - 6	3 - 9										
13	8	5	4 - 10	ES307	STR												
14	18	5	4 - 6	ES308	2	2 - 0	0 - 6					2 - 0					
15	4	5	5 - 9	ES309	13												
16	8	5	14 - 9	ES310	STR												
17	8	5	27 - 0	ES311	STR												
18	48	5	6 - 3	ES312	STR												
19	2	5	3 - 9	ES313	8	1 - 3	1 - 3					1 - 3					
20	6	5	29 - 6	ES314	STR												
21																	
22	162	6	30 - 6	ES900	STR												
✱ 23	163	6	9 - 3	ES901	STR												
24	162	6	29 - 0	ES902	STR												
25	162	6	10 - 6	ES903	STR												
26																	
✱ 27	33	6	2 - 4	FS900	14	1 - 6	0 - 10	0 - 9	0 - 0	0 - 0			0 - 7				0 - 0
28																	
29																	
30																	
31																	
32						ABUTMENT 1											
33	44	5	5 - 7	1A500	2	0 - 10	4 - 9					0 - 0					
✱ 34	45	5	14 - 5	1A501	STR												
35	41	5	6 - 1	1A502	2	2 - 0	2 - 1					2 - 0					
36	16	5	5 - 11	1A503	2	2 - 0	1 - 11					2 - 0					
37	34	5	29 - 6	1A504	STR												
38	34	5	18 - 10	1A505	STR												
39	52	5	7 - 0	1A506	14	5 - 0	2 - 0	0 - 0	0 - 0	0 - 0			1 - 5				0 - 0
40																	
✱ 41	27	5	30 - 0	1A600	STR												
42	26	5	20 - 0	1A601	STR												
43	41	5	6 - 3	1A602	STR												
44	42	5	12 - 6	1A603	STR												
45																	
✱ 46	68	7	11 - 4	1A700	STR												
47	44	7	13 - 0	1A701	1	0 - 10	11 - 4					0 - 10		0 - 7			
48																	
✱ 49	84	8	8 - 9	1A800	2	1 - 3	7 - 6					0 - 0					
50																	
51						WINGWALL 1											
52	6	5	5 - 7	1W500	2	0 - 10	4 - 9					0 - 0					
✱ 53	7	5	19 - 6	1W501	STR												
54	5	5	6 - 1	1W502	2	2 - 0	2 - 1					2 - 0					
55	16	5	13 - 11	1W503	16	4 - 11	2 - 1	4 - 11	2 - 0				1 - 5		1 - 5		
56	5	5	7 - 9	1W504	16	0 - 0	2 - 1	4 - 11	0 - 9				0 6.375		0 6.375		
57	5	5	6 - 1	1W505	19		0 - 0	4 - 0					1 - 6		1 - 6		5 - 6
58																	
✱ 59	23	6	9 - 6	1W600	STR												
60	8	6	17 - 3	1W601	STR												
61	3	6	7 - 6	1W602	STR												
62																	
▲✱ 63	14	7	9 - 6	1W700	STR												
▲ 64	8	7	11 - 2	1W701	1	0 - 1	9 - 6					0 - 10		0 - 7			
65																	
✱ 66	9	8	8 - 9	1W800	2	1 - 3	7 - 6					0 - 0					
67																	
68						WINGWALL 2											
69	6	5	4 - 8	2W550	S10		2 - 1	0 - 8	2 - 1								
70																	
71	6	6	7 - 6	2W600	STR												
72																	
73																	
74																	
75																	
76																	
77																	
78																	
79																	
80																	
81																	

ITEM	NO. PIECES	SIZE	LENGTH	MARK	TYPE	A	B	C	D	E	F	G	H	J	K	R	O
82						ABUTMENT 2											
83	55	5	5 - 7	2A500	2	0 - 10	4 - 9					0 - 0					
84	55	5	13 - 9	2A501	STR												
85	45	5	6 - 1	2A502	2	2 - 0	2 - 1					2 - 0					
86	32	5	21 - 6	2A503	STR												
87	32	5	24 - 3	2A504	STR												
88																	
89	26	6	34 - 0	2A600	STR												
90	26	6	26 - 6	2A601	STR												
✱ 91	54	6	6 - 3	2A602	STR												
92	52	6	11 - 9	2A603	STR												
93																	
▲✱ 94	136	7	11 - 4	2A700	STR												
▲ 95	68	7	13 - 0	2A701	1	0 - 10	11 - 4					0 - 10		0 - 7			
96																	
✱ 97	108	8	8 - 9	2A800	2	1 - 3	7 - 6					0 - 0					
98																	
99																	
100						WINGWALL 3											
101	25	5	6 - 1	3W500	2	2 - 0	2 - 1					2 - 0					
102	15	5	5 - 1	3W501	2	3 - 1	2 - 0										
103	30	5	12 - 0	3W502	STR												
104	16	5	4 - 9	3W503	STR												
✱ 105	15	5	5 - 0	3W504	STR												
106	22	5	8 - 4	3W505	STR												
107	8	5	10 - 4	3W506	STR												
0 - 0 108	10	5	6 - 0	3W507	2	2 - 0	2 - 8					2 - 0					
▲ 109	18	5	6 - 7	3W508	2	1 - 0	5 - 7					0 - 0					
110																	
111	12	6	10 - 6	3W600	STR												
112																	
113																	
114						WINGWALL 4											
115	9	5	5 - 7	4W500	2	0 - 10	4 - 8										
✱ 116	10	5	19 - 0	4W501	STR												
117	30	5	7 - 0	4W502	14	5 - 0	2 - 0	0 - 0	0 - 0	0 - 0			1 - 5				0 - 0
▲ 118	30	5	12 - 6	4W503	14	10 - 0	2 - 6	0 - 0	0 - 0	0 - 0			1 - 9				0 - 0
119	3	5	7 - 6	4W504	STR												
0 - 0 120	10	5	17 - 6	4W505	14	0 - 0	2 - 6	7 - 6	2 - 6				1 - 9				11 - 0
121	11	5	5 - 10	4W506	2	2 - 1	3 - 9										
122	2	5	4 - 1	4W507	2	1 - 0	2 - 1	1 - 0									
123	6	5	6 - 1	4W508	2	2 - 0	2 - 1					2 - 0					
124																	
✱ 125	21	6	17 - 0	4W600	STR												
126	12	6	17 - 0	4W601	STR												
127																	
128	16	7	12 - 0	4W700	STR												
129																	
130	12	8	8 - 9	4W800	2	1 - 3	7 - 6					0 - 0					
131																	
132																	
133	50					RETAINING WALL											
134	~~26~~	5	13 - 0	RW500	STR												
▲ 135	50	5	5 - 6	RW501	STR												
✱ 136	51	5	4 - 10	RW502	2	0 - 10	4 - 0					0 - 0					
▲ 137	50	5	6 - 3	RW503	STR												
138	2	5	23 - 10	RW504	14	2 - 10	21 - 0	0 - 0	0 - 0				20 - 10				
139																	
140																	
141																	
142																	
143																	
144																	
145																	
146																	
147																	
148																	
149																	
150																	
151																	
152																	
153																	
154																	
155																	
156																	
157																	
158																	
159																	
160																	
161																	
162																	

ITEM	NO. PIECES	SIZE	LENGTH	MARK	TYPE	A	B	C	D	E	F	G	H	J	K	R	O
163																	
164																	
165																	
166																	
167																	
168																	
169																	
170																	
171																	
172																	
173																	
174																	
175																	
176																	
177																	
178																	
179																	
180																	
181																	
182																	
183																	

ASTM STANDARD REINFORCING BARS

BAR SIZE DESIGNATION	WEIGHT POUNDS PER FOOT	NOMINAL DIMENSIONS ROUND SECTION		
		DIAMETER INCHES	CROSS SECTIONAL AREA SQ. INCHES	PERIMETER INCHES
#3	0.376	0.375	0.11	1.178
#4	0.668	0.500	0.20	1.571
#5	1.043	0.625	0.31	1.963
#6	1.502	0.750	0.44	2.356
#7	2.044	0.875	0.60	2.749
#8	2.670	1.000	0.79	3.142
#9	3.400	1.128	1.00	3.544
#10	4.303	1.270	1.27	3.990
#11	5.313	1.410	1.56	4.430
#14	7.650	1.693	2.25	5.320
#18	13.60	2.257	4.00	7.090

TYPICAL BAR BENDS

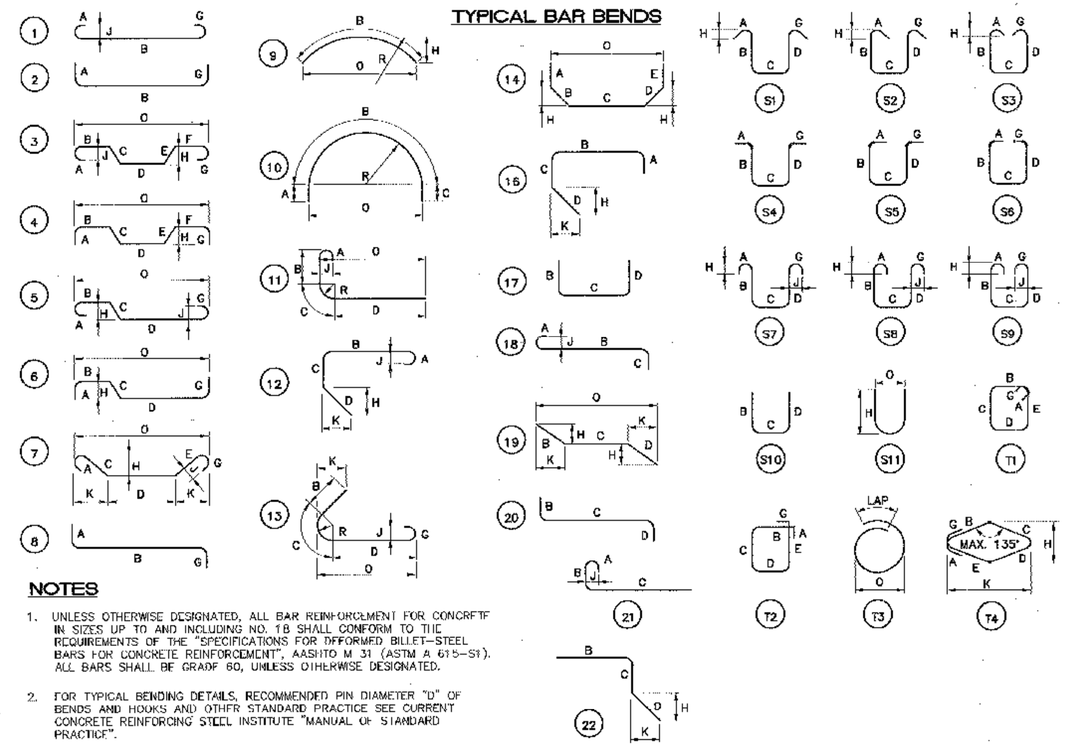

NOTES

1. UNLESS OTHERWISE DESIGNATED, ALL BAR REINFORCEMENT FOR CONCRETE IN SIZES UP TO AND INCLUDING NO. 18 SHALL CONFORM TO THE REQUIREMENTS OF THE "SPECIFICATIONS FOR DEFORMED BILLET-STEEL BARS FOR CONCRETE REINFORCEMENT", AASHTO M 31 (ASTM A 615-91). ALL BARS SHALL BE GRADE 60, UNLESS OTHERWISE DESIGNATED.
2. FOR TYPICAL BENDING DETAILS, RECOMMENDED PIN DIAMETER "D" OF BENDS AND HOOKS AND OTHER STANDARD PRACTICE SEE CURRENT CONCRETE REINFORCING STEEL INSTITUTE "MANUAL OF STANDARD PRACTICE".
3. BARS WHICH REQUIRE MORE ACCURATE BENDING THAN STANDARD PRACTICES SHOULD HAVE LIMITS INDICATED.
4. ALL DIMENSIONS ARE OUT TO OUT OF BAR EXCEPT "A" AND "G" ON STANDARD 180° AND 135° HOOKS.
5. "J" DIMENSION ON 180° HOOKS TO BE SHOWN ONLY WHERE NECESSARY TO RESTRICT HOOK SIZE. OTHERWISE STANDARD HOOKS ARE TO BE USED.
6. "H" DIMENSION ON STIRRUPS TO BE SHOWN ONLY WHEN NECESSARY TO MAINTAIN CLEARANCES.
7. WHERE SLOPE DIFFERS FROM 45° DIMENSIONS "H" AND "K" MUST BE SHOWN.

▲ DENOTES BARS TO BE CUT IN FIELD.
✱ DENOTES ONE EXTRA BAR ADDED FOR TESTING PURPOSES.
△ DENOTES TWO EXTRA BARS ADDED FOR TESTING PURPOSES.

BETTIGOLE ANDREWS & CLARK, INC.
Consulting Engineers

STATE OF VERMONT
AGENCY OF TRANSPORTATION

CITY OF BARRE	BRIDGE NO. B-10
	LOC. STA.
STREET NAME BLACKWELL STREET	SURV. STA.
BLACKWELL STREET OVER STEVENS BRANCH	
REINFORCING STEEL SCHEDULE	
DESIGNED BY V DeAngelo	DRAWN BY S Belanger
CHECKED BY J Patusky DATE 12/98	BRIDGE DESIGN SUPERVISOR J Patusky DATE 12/98
PROJECT BARRE CITY	PROJECT NO. BRM 6000(19)
B&C DRAWING NO. GLKREBAR	DATE 12/98
BRIDGE SHEET NO. BR120	SHEET 33 OF 46