STATE OF VERMONT
AGENCY OF TRANSPORTATION

INDEX OF SHEETS

1. TITLE SHEET
2-3. SURVEY LAYOUT SHEETS
4-5. PROFILE SHEETS
6-7. BRIDGE QUANTITY SHEETS
8-9. R.O.W. SHEETS
10. PIPE DETAIL SHEET
11. GENERAL NOTES
12. INLET HEADWALL DETAILS
13. OUTLET HEADWALL DETAILS
14. REINFORCING STEEL SCHEDULE
15-24. ROADWAY SECTIONS
25-29. CHANNEL SECTIONS

STANDARDS

B-17	03-10-93
E-100	08-09-93
E-101	08-08-93
E-102	08-08-93
E-102a	08-08-93
E-107	08-08-93
E-107a	08-08-93
G-1	06-01-94
G-1d	06-01-94
G-18	06-01-94
T-1	06-01-94
T-2	06-01-94

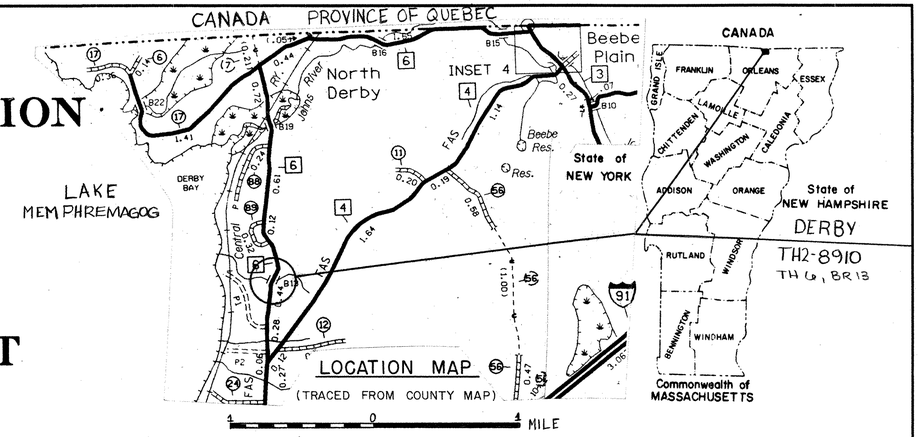

PROPOSED IMPROVEMENT
BRIDGE PROJECT

TOWN OF DERBY
COUNTY OF ORLEANS

ROUTE NO: TH 6, CLASS 2 BRIDGE NO: BR 13

PROJECT LOCATION: BEGINNING AT A POINT ON TH 6, 0.060 MILES NORTH OF THE INTERSECTION WITH TH 4 AND EXTENDING NORTHERLY FOR 0.152 MILES.

PROJECT DESCRIPTION: REPLACE EXISTING PIPE WITH NEW 84"Ø x 82'-0" CAAPP, RECONSTRUCT ROADWAY APPROACHES AND CHANNEL.

LENGTH OF PARTICIPATION ROADWAY:	200.00	FEET
LENGTH OF NON-PARTICIPATION ROADWAY:	600.00	FEET
LENGTH OF PROJECT:	800.00	FEET

GENERAL NOTES

1. ONE-WAY TRAFFIC SHALL BE MAINTAINED FOR DURATION OF PROJECT.

FOR ADDITIONAL GENERAL NOTES SEE SHEET 11 OF 29.

RECORD PLANS

CONTRACTOR: PROJECT COMPLETED BY TOWN
RESIDENT ENGINEER:
CONSTRUCTION BEGAN:
CONSTRUCTION COMPLETE:
RECORD PLANS BY:

I HEREBY CERTIFY THAT ALL THE CONSTRUCTION REQUIRED BY THIS SET OF DRAWINGS HAS BEEN ACCOMPLISHED AS INDICATED HEREIN.

BY _____ RESIDENT ENGINEER

DATE _____

NOTE: Any further information concerning final quantities, amounts or other details relative to this project may be found at Central Files in the electronic archives.

TRAFFIC DATA

1992 ADT	490
1992 DHV	70
2012 ADT	660
2012 DHV	95
% T	2
% D	66

18 Kip EAL (Flexible) = 202,000
total for both directions (1992-2012)

DESIGN SPEED = 30 MPH

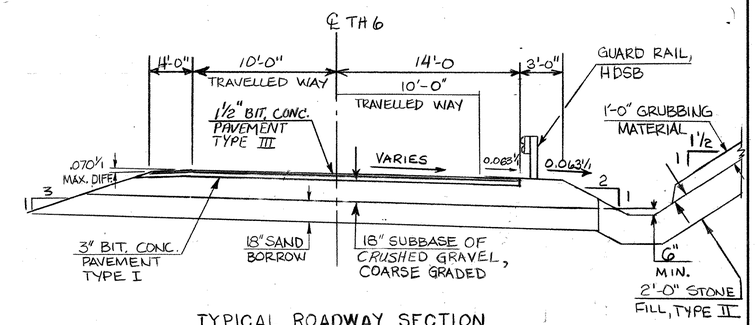

TYPICAL ROADWAY SECTION
SCALE: 1" = 5'-0"

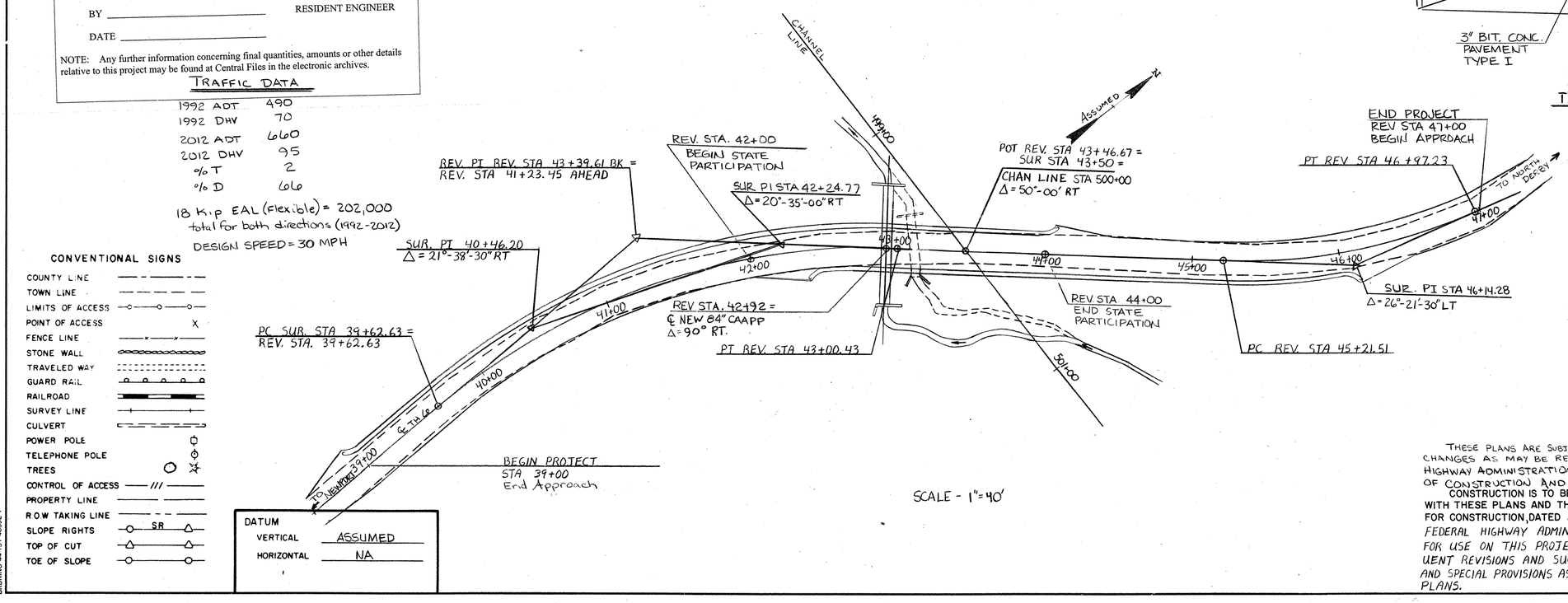

SCALE - 1" = 40'

CONVENTIONAL SIGNS

COUNTY LINE
TOWN LINE
LIMITS OF ACCESS
POINT OF ACCESS
FENCE LINE
STONE WALL
TRAVELED WAY
GUARD RAIL
RAILROAD
SURVEY LINE
CULVERT
POWER POLE
TELEPHONE POLE
TREES
CONTROL OF ACCESS
PROPERTY LINE
R.O.W TAKING LINE
SLOPE RIGHTS
TOP OF CUT
TOE OF SLOPE

DATUM

VERTICAL	ASSUMED
HORIZONTAL	NA

THESE PLANS ARE SUBJECT TO SUCH ENGINEERING CHANGES AS MAY BE REQUIRED BY THE FEDERAL HIGHWAY ADMINISTRATION OR THE DIRECTOR OF CONSTRUCTION AND MAINTENANCE.

CONSTRUCTION IS TO BE CARRIED ON IN ACCORDANCE WITH THESE PLANS AND THE STANDARD SPECIFICATIONS FOR CONSTRUCTION, DATED 1990, AS APPROVED BY THE FEDERAL HIGHWAY ADMINISTRATION ON APRIL 15, 1990 FOR USE ON THIS PROJECT, INCLUDING ALL SUBSEQUENT REVISIONS AND SUCH REVISED SPECIFICATIONS AND SPECIAL PROVISIONS AS ARE INCORPORATED IN THESE PLANS.

SUBMITTED BY ORDER OF THE STATE TRANSPORTATION BOARD

APPROVED [signature] DATE 4-24-96
DIRECTOR OF ENGINEERING

PROJECT	PROJECT NO.
DERBY	TH2-8910

SHEET 1 OF 29 SHEETS

0-10

BRUNING 44-131 40592-1

SJB 7/21/81

REMOVING AND RESETTING FENCE
REV. 38+92 RT. ~ REV. 39+82 RT.
REV. 42+45 RT. ~ REV. 44+48 RT.
REV. 41+86 LT. ~ REV. 44+30 LT.
REV. 46+00 LT. ~ REV. 46+56 LT.

STEEL BEAM GUARD RAIL
REV. 38+88 LT. ~ REV. 44+09 LT.
REV. 41+87 RT. ~ REV. 46+12 RT.

CONSTRUCT FIELD DRIVE (R.O.W. AGREEMENT)
REV. 44+25 LT.

ANCHOR FOR STEEL BEAM RAIL
REV. 41+95 RT.
REV. 46+06 RT.
SURV. 38+95 LT.
REV. 44+03 LT.

CONSTRUCT STONE-LINED DITCH
SURV. 39+00 RT. ~ REV. 42+84 RT.
REV. 44+42 LT. ~ REV. 46+94 LT.

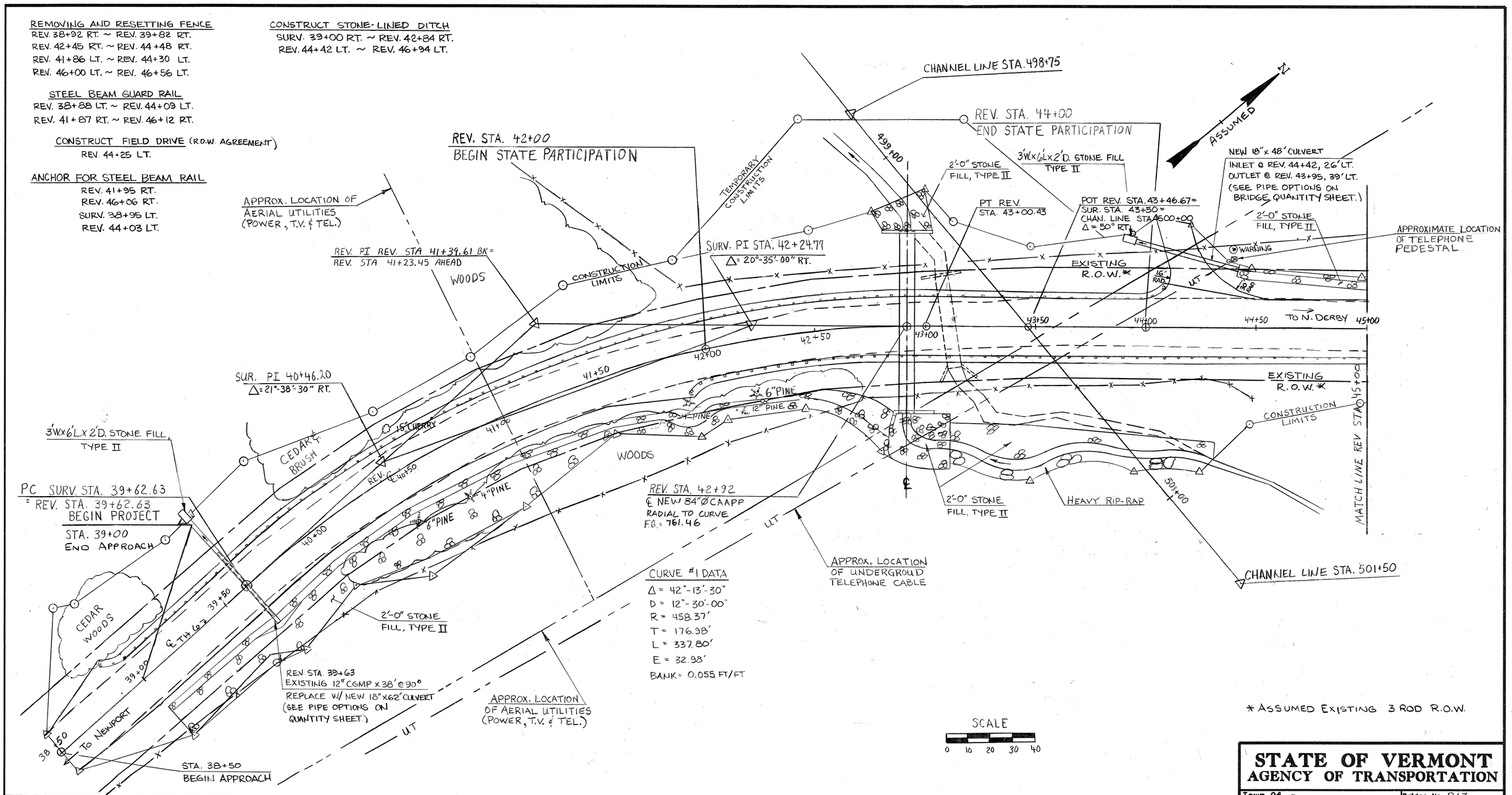

* ASSUMED EXISTING 3 ROD R.O.W.

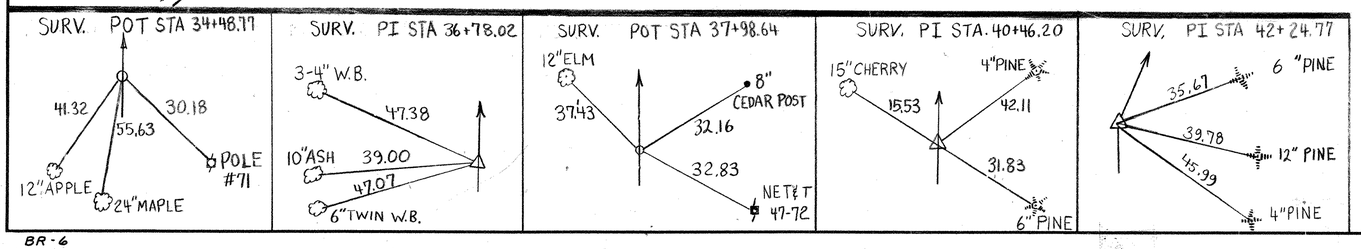

PROJECT BENCHMARK LOCATION

STATION	OFFSET	ELEVATION**	DESCRIPTION
34+21	13' RT.	800.00	POLE # 71
44+00	0'	757.31	℄ NAIL
51+75	15' RT.	812.94	POLE # 47/76

** ASSUMED

STATE OF VERMONT
AGENCY OF TRANSPORTATION

Town Of DERBY	Bridge No. B13
Highway No. TH 6	Log Sta. / Surv. Sta.
TH6, BR13 OVER UNNAMED BROOK	
PLAN VIEW	
Designed By B. DONALD	Drawn By S. FUGERE
Checked By M. EVANS-MONGEON Date 10/92	Bridge Design Supervisor J. WEAVER Date 10/92
PROJECT DERBY	PROJECT NO. TH2 8910
L.C.C. info.	
Bridge Sheet No.	Sheet 2 of 29

BRUNING 44.232 73216

BR-6

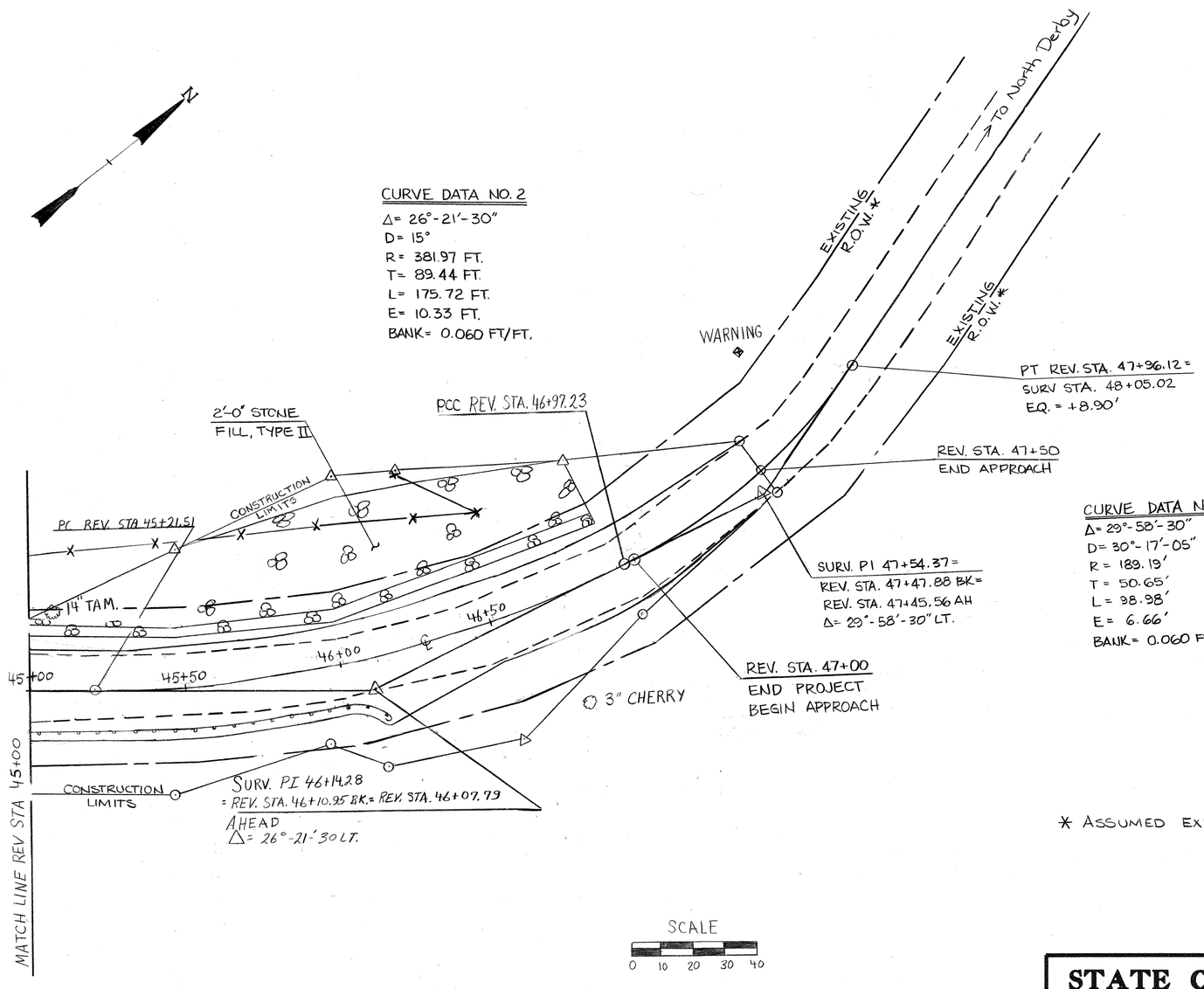

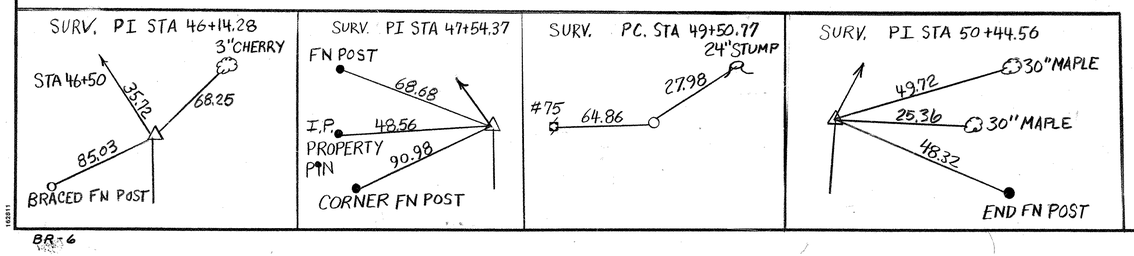

STATE OF VERMONT
AGENCY OF TRANSPORTATION

Town Of DERBY	Bridge No. B13
Highway No. TH6	Log Sta. / Surv. Sta.
TH6, BR13 OVER UNNAMED BROOK	
PLAN VIEW	
Designed By B. DONALD	Drawn By S. FUGERE
Checked By M. EVANS-MONGEON Date 10/92	Bridge Design Supervisor J. WEAVER Date 10/92
PROJECT DERBY	PROJECT NO. TH 2 8910
I.G.C. Info.	
Bridge Sheet No.	Sheet 3 of 29

BR-6

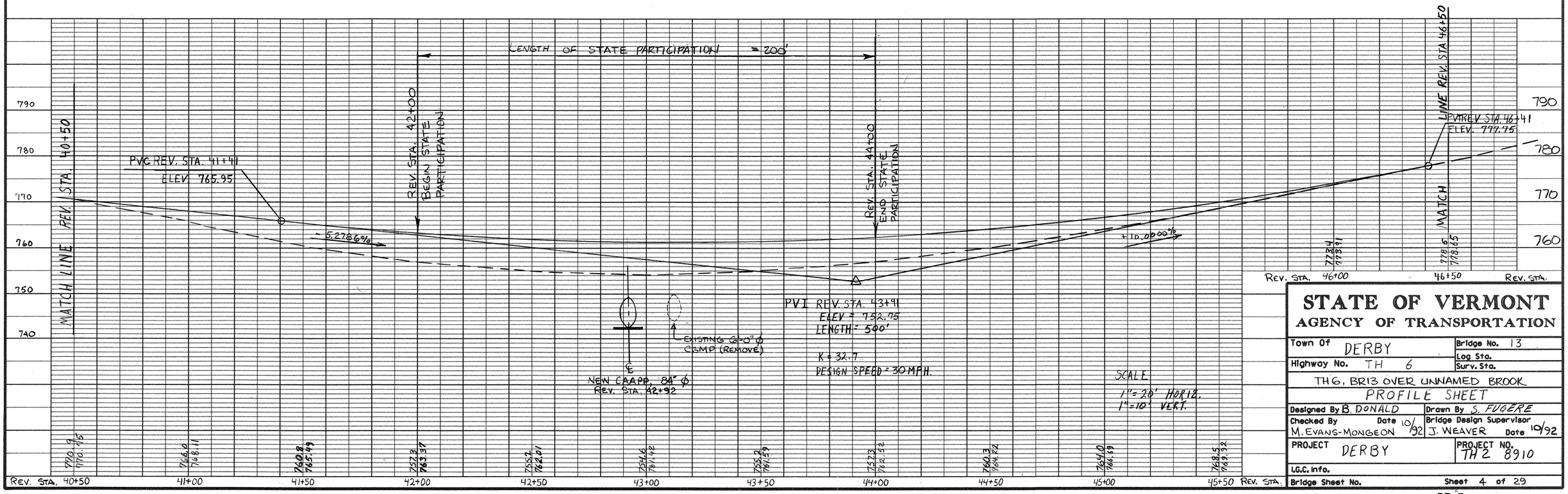

STATE OF VERMONT
AGENCY OF TRANSPORTATION

Town Of DERBY	Bridge No. 13
Highway No. TH 6	Log Sta. / Surv. Sta.
TH6, BR13 OVER UNNAMED BROOK	
PROFILE SHEET	
Designed By B. DONALD	Drawn By S. FUGERE
Checked By M. EVANS-MONGEON Date 10/92	Bridge Design Supervisor J. WEAVER Date 10/92
PROJECT DERBY	PROJECT NO. TH 2 8910
I.G.C. Info.	
Bridge Sheet No.	Sheet 4 of 29

BR-3

BRUNING 44-232 73216

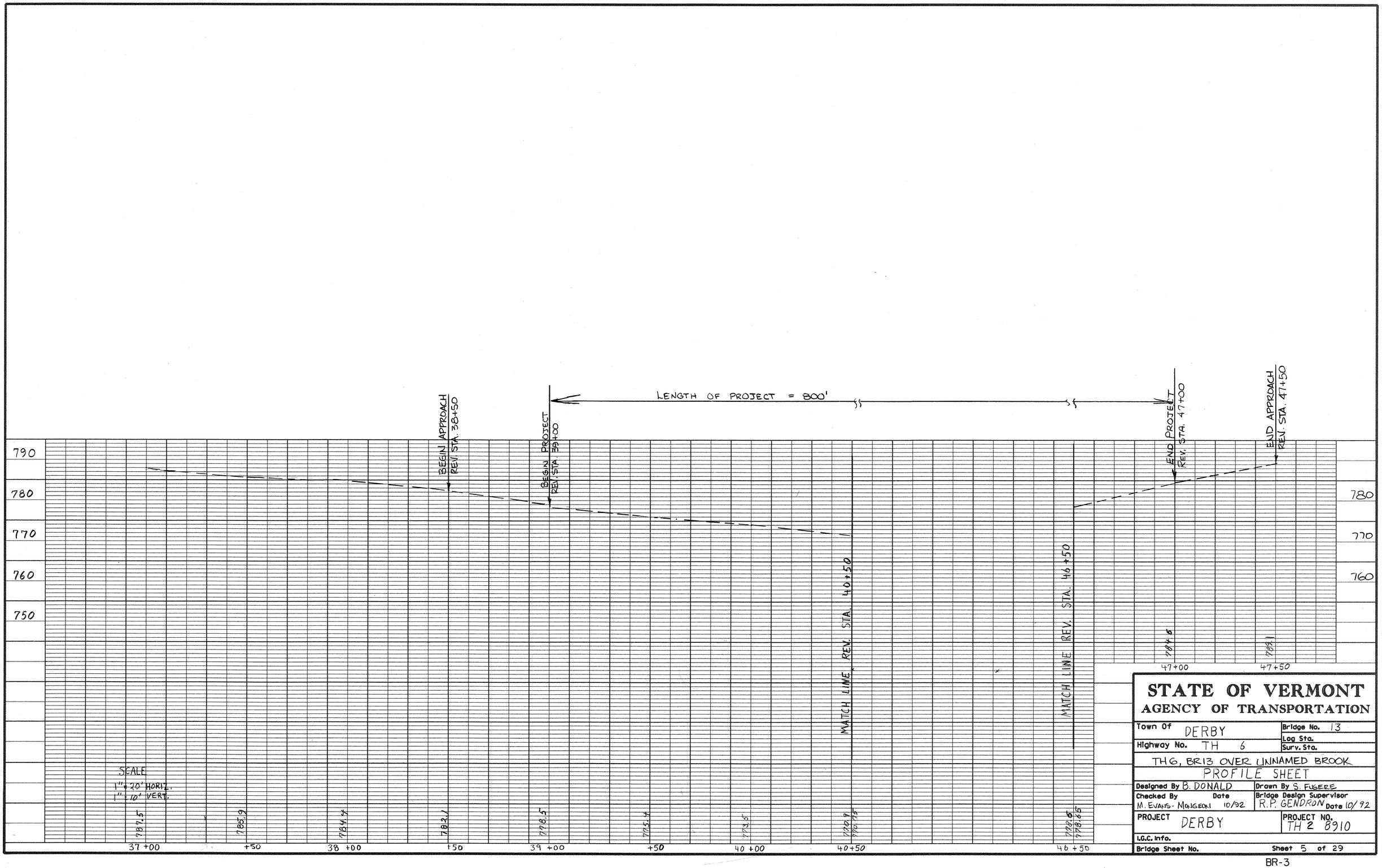

STATE OF VERMONT
AGENCY OF TRANSPORTATION

Town Of DERBY	Bridge No. 13
Highway No. TH 6	Log Sta. / Surv. Sta.
TH6, BR13 OVER UNNAMED BROOK	
PROFILE SHEET	
Designed By B. DONALD	Drawn By S. FUGERE
Checked By M. EVANS-MONGEON Date 10/92	Bridge Design Supervisor R.P. GENDRON Date 10/92
PROJECT DERBY	PROJECT NO. TH 2 8910
L.G.C. Info.	
Bridge Sheet No.	Sheet 5 of 29

BR-3

BRUNING 44-232 73216

EARTHWORK

GRADES

% GDE	VERT CUR	STATION	ELEVATION ON TAN.	ELEVATION ON V.C.	CORR. V.C.	DIST.	AREA	CU.YDS.	AREA	CU.YDS.	AREA	CU.YDS.	AREA	CU. YDS.

EARTHWORK SUMMARY

FILL REQUIRED:	4207 CY
FILL FACTOR:	631 CY
SUBTOTAL:	4838 CY
ROUNDING:	2 CY
TOTAL:	4840 CY

FILL AVAILABLE

SOLID ROCK EXCAVATION:	10 X 1.00	=	10 CY
COMMON EXCAVATION:	4150 X 0.95	=	3943 CY
UNCL. CHAN. EXC.:	480 X 0.60	=	288 CY
TRENCH EXC. OF EARTH:	140 X 0.95	=	133 CY
STRUCTURE EXC.:	490 X 0.60	=	294 CY
SUBTOTAL:			4668 CY
ROUNDING:			2 CY
TOTAL:			4670 CY

FILL REQUIRED:	4840 CY
FILL AVAILABLE:	4670 CY

170 CY EARTH BORROW REQUIRED

TEMPORARY EROSION CONTROL ITEMS

(INCLUDED IN STATE PARTICIPATION EROSION CONTROL QUANTITY)

ITEM	UNIT	QTY
TRENCH EXAVATION OF EARTH	CY	20
SUBBASE OF CRUSHED GRAVEL (C.G.)	CY	80
STONE FILL, TYPE I	CY	10
GEOTEXTILE FOR SILT FENCE	SY	70
HAY BALES FOR EROSION CONTROL	EA	10
SEED - WINTER RYE *	LB	10
EROSION MATTING	SY	30

* 50/50 MIX OF ANNUAL RYEGRASS (LOLIUM MULTIFLORUM) AND CEREAL (WINTER) RYE (SECALE CEREALE)

BRIDGE QUANTITY SHEET

STATE OF VERMONT
AGENCY OF TRANSPORTATION
STRUCTURES DIVISION

QUANTITY BREAKDOWN

ITEM NO.	ITEM	UNIT		STATE PARTICIPATION ROADWAY	PIPE	CHANNEL	EROSION CONTROL			STATE NON-PARTICIPATION ROADWAY	CHANNEL	EROSION CONTROL				TOTAL	FINAL
201.10	CLEARING AND GRUBBING (0.23 ACRES)	LS		1												1	
201.10	CLEARING AND GRUBBING (0.43 ACRES)	LS								1						1	
203.15	COMMON EXCAVATION	CY								4150						4150	
203.16	SOLID ROCK EXCAVATION	CY								10						10	
203.27	UNCLASSIFIED CHANNEL EXCAVATION	CY				440					50					490	
203.30	EARTH BORROW	CY		100						70						170	
203.31	SAND BORROW	CY		490						1340						1830	
203.32	GRANULAR BORROW	CY			910											910	
203.40	FINE GRADING - SUBGRADE	SY		920						2960						3880	
204.20	TRENCH EXCAVATION OF EARTH	CY		100			20			40						160	
204.25	STRUCTURE EXCAVATION	CY			490											490	
204.30	GRANULAR BACKFILL FOR STRUCTURES	CY			80											80	
301.25	SUBBASE OF CRUSHED GRAVEL (COARSE GRADED)	CY		390			80			1160						1630	
404.65	EMULSIFIED ASPHALT	CWT		1						3						4	
406.25	BITUMINOUS CONCRETE PAVEMENT	TON		158						473						631	
501.25	CONCRETE, CLASS B	CY			58											58	
507.15	REINFORCING STEEL	LB			6970											6970	
511.25	CORRUGATED ALUMINUM ALLOY PLATE PIPE (84" DIA. X 82' X 5027#)	EA			1											1	
514.10	WATER REPELLENT	GAL			2											2	
528.10	ONE-WAY TEMPORARY BRIDGE	LS		1												1	
529.15	REMOVAL OF STRUCTURE	EA		1												1	
	* BEGIN PIPE OPTIONS *																
601.0215	18" CAAP .060 (2 - 2/3 X 1/2)	LF								62						62	
601.0415	18" PCCSP .064 (2 - 2/3 X 1/2)	LF								62						62	
601.0915	18" CPEP	LF								62						62	
601.0015	18" CSP .064 (2 - 2/3 X 1/2)	LF								48						48	
601.0915	18" CPEP	LF								48						48	
	* END PIPE OPTIONS *																
608.25	ALL PURPOSE EXCAVATOR RENTAL, TYPE I (N.A.B.I.)	HR					1									1	
609.10	DUST CONTROL WITH WATER	MGAL		50												50	
609.15	DUST & ICE CONTROL W/ CALC. CHLORIDE	TON		.50												.50	
613.10	STONE FILL, TYPE I	CY					10									10	
613.11	STONE FILL, TYPE II	CY		90		210				900	40					1240	
613.15	RIPRAP, HEAVY TYPE	CY				50					20					70	
614.10	TEMPORARY RELOCATION OF STREAM	LS				1										1	
620.50	REMOVING AND RESETTING FENCE	LF		398						292						690	
621.20	STEEL BEAM GUARD RAIL	LF		400						558						958	
621.60	ANCHOR FOR STEEL BEAM GUARD RAIL	EA								4						4	
630.15	FLAGGERS	HR		315												315	
631.10	FIELD OFFICE-ENGINEERS	LS		1												1	
631.16	TESTING EQUIPMENT - CONCRETE	LS			1											1	

BRIDGE AT STATION REV. STA. 42+92
LOCATION T.H. 6 OVER UNNAMED BROOK

PREPARED BY: G. ROY
CHECKED BY: S. FUGERE
SUPERVISOR: J.H. WEAVER

PROJECT: DERBY
PROJECT NO: TH2 - 8910
BR ____ OF ____
SHEET NO: 6 OF 29

EARTHWORK

GRADES

% GDE	VERT CUR	STATION	ELEVATION ON TAN.	ELEVATION ON V.C.	CORR. V.C.	DIST.	AREA	CU.YDS.	AREA	CU.YDS.	AREA	CU.YDS.	AREA	CU. YDS.

BRIDGE QUANTITY SHEET

STATE OF VERMONT
AGENCY OF TRANSPORTATION
STRUCTURES DIVISION

ITEM NO.	ITEM	UNIT	QUANTITY BREAKDOWN													TOTAL	FINAL
				STATE PARTICIPATION ROADWAY	PIPE	CHANNEL	EROSION CONTROL			STATE NON-PARTICIPATION ROADWAY	CHANNEL	EROSION CONTROL					
631.17	TESTING EQUIPMENT - BITUMINOUS	LS		1												1	
631.25	FIELD OFFICE - TELEPHONE (N.A.B.I.)	LS		1												1	
635.10	MOBILIZATION	LS		1												1	
646.21	4" YELLOW LINE	LF		400						1400						1800	
649.31	GEOTEXTILE UNDER STONE FILL	SY				460					1420					1880	
649.51	GEOTEXTILE FOR SILT FENCE	SY					70									70	
651.15	SEED	LB					20					30				50	
651.17	SEED - WINTER RYE	LB					10									10	
651.18	FERTILIZER	LB					120					220				340	
651.20	AGRICULTURAL LIMESTONE	TON					.50					1				1.5	
651.25	HAY MULCH	TON					.50					1				1.5	
651.26	HAY BALES FOR EROSION CONTROL	EA					10									10	
651.35	TOPSOIL	CY					70					140				210	
651.40	GRUBBING MATERIAL	SY					220					950				1170	
654.10	EROSION MATTING	SY					30									30	

BRIDGE AT STATION REV. STA. 42+92
LOCATION T.H. 6 OVER UNNAMED BROOK

PREPARED BY: G. ROY
CHECKED BY: S. FUGERE
SUPERVISOR: J.H. WEAVER

PROJECT: DERBY
PROJECT NO: TH2 - 8910
BR ____ OF ____
SHEET NO: 7 OF 29

REMOVING AND RESETTING FENCE
REV. 38+92 RT. ~ REV. 39+82 RT.
REV. 42+45 RT. ~ REV. 44+48 RT.
REV. 41+86 LT. ~ REV. 44+18 LT.
REV. 46+00 LT. ~ REV. 46+56 LT.

STEEL BEAM GUARD RAIL
REV. 38+88 LT. ~ REV. 44+09 LT.
REV. 41+87 RT. ~ REV. 46+12 RT.

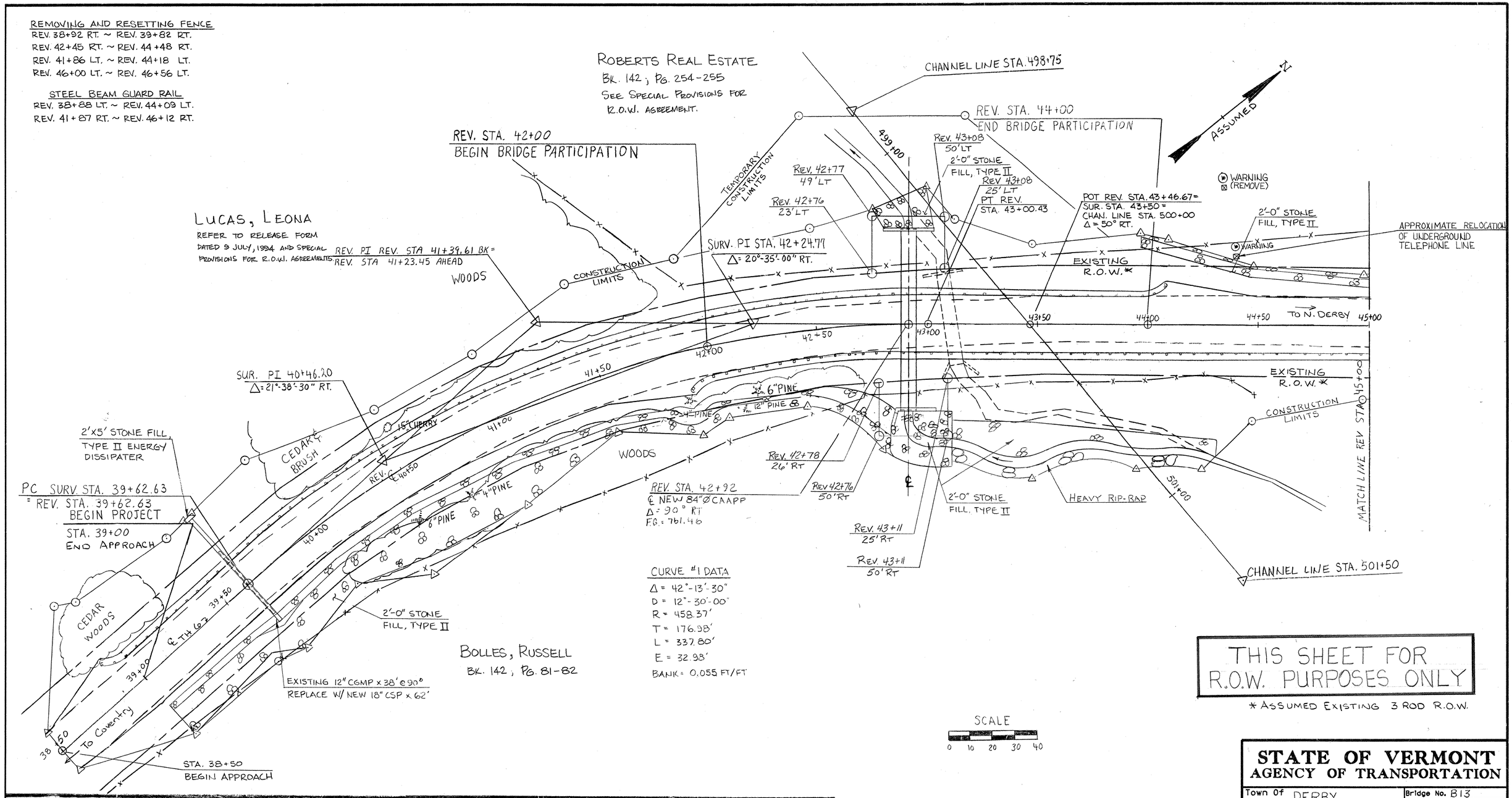

CURVE #1 DATA
Δ = 42°-13'-30"
D = 12°-30'-00"
R = 458.37'
T = 176.98'
L = 337.80'
E = 32.98'
BANK = 0.055 FT/FT

THIS SHEET FOR R.O.W. PURPOSES ONLY

* ASSUMED EXISTING 3 ROD R.O.W.

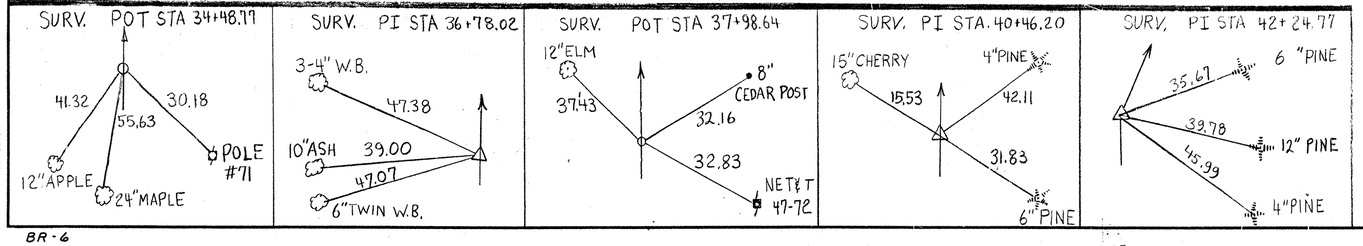

PROJECT BENCHMARK LOCATION

STATION	OFFSET	ELEVATION**	DESCRIPTION
34+21	13' RT.	800.00	POLE # 71
44+00	0'	757.31	℄ NAIL
51+75	15' RT.	812.94	POLE # 47/76

** ASSUMED

STATE OF VERMONT
AGENCY OF TRANSPORTATION

Town Of DERBY	Bridge No. B13
	Log Sta.
Highway No. TH 6	Surv. Sta.
TH6, BR13 OVER UNNAMED BROOK	
PLAN VIEW	
Designed By B. DONALD	Drawn By S. FUGERE
Checked By M. EVANS-MONGEON Date 10/92	Bridge Design Supervisor J. WEAVER Date 10/92
PROJECT DERBY	PROJECT NO. TH2 8910
I.G.C. Info.	
Bridge Sheet No.	Sheet 8 of 29

BRUNING 44-232 73216

BR-6

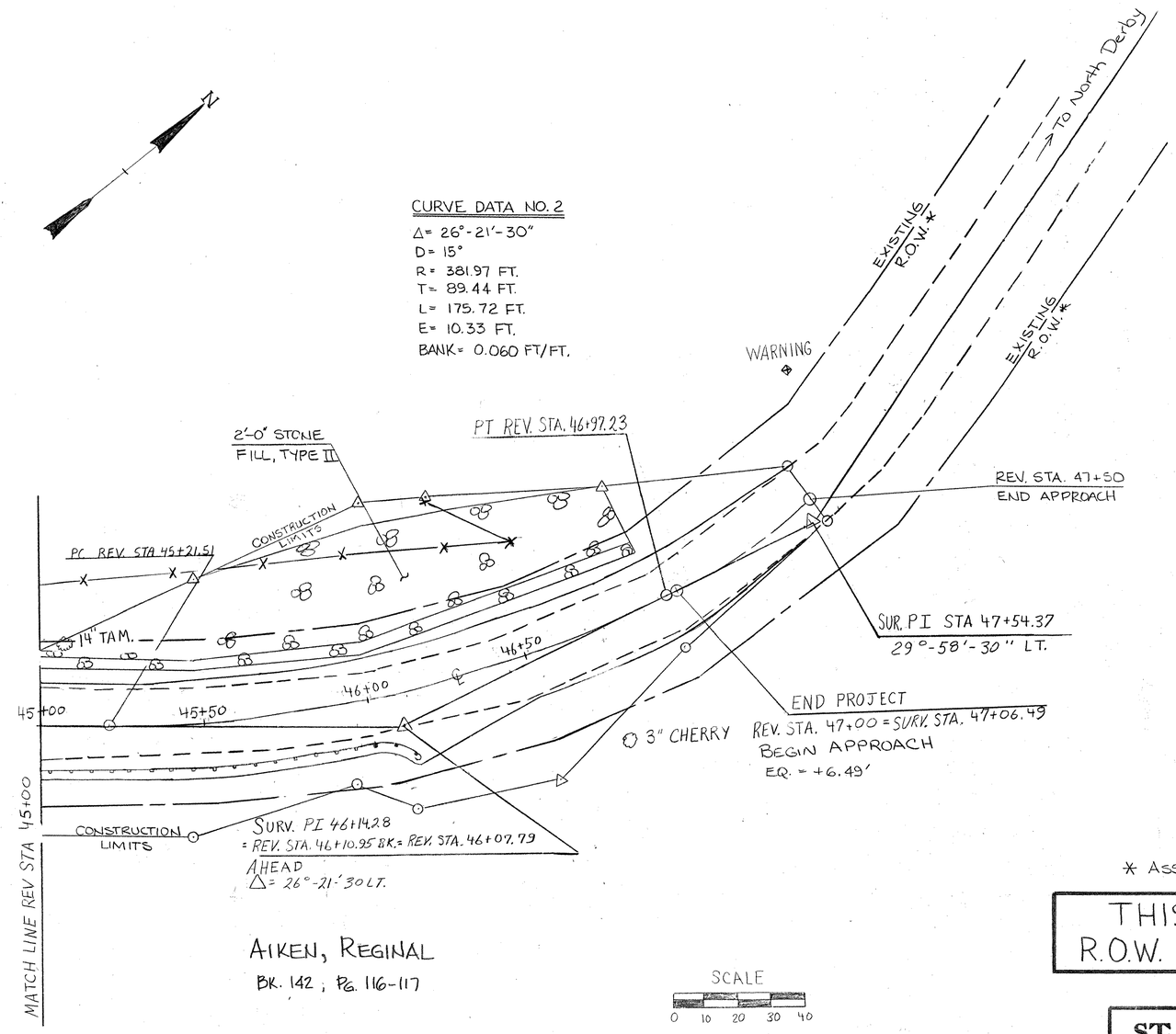

* ASSUMED EXISTING 3 ROD R.O.W.

THIS SHEET FOR R.O.W. PURPOSES ONLY

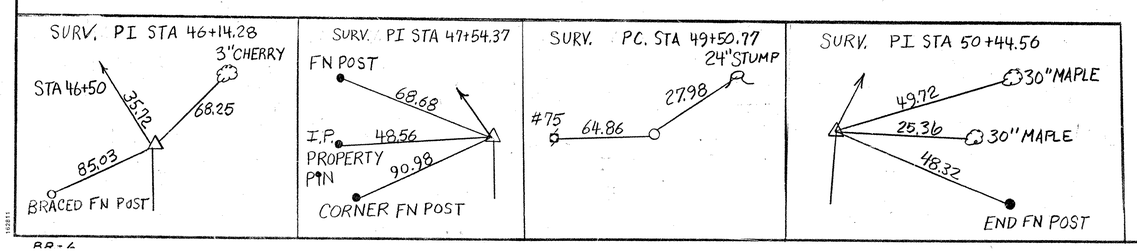

STATE OF VERMONT
AGENCY OF TRANSPORTATION

Town Of DERBY	Bridge No. B13
Highway No. TH6	Log Sta. / Surv. Sta.
TH6, BR13 OVER UNNAMED BROOK	
PLAN VIEW	
Designed By B. DONALD	Drawn By S. FUGERE
Checked By M. EVANS-MONGEON Date 10/92	Bridge Design Supervisor J. WEAVER Date 10/92
PROJECT DERBY	PROJECT NO. TH 2 8910
I.G.C. Info.	
Bridge Sheet No.	Sheet 9 of 29

BR-6

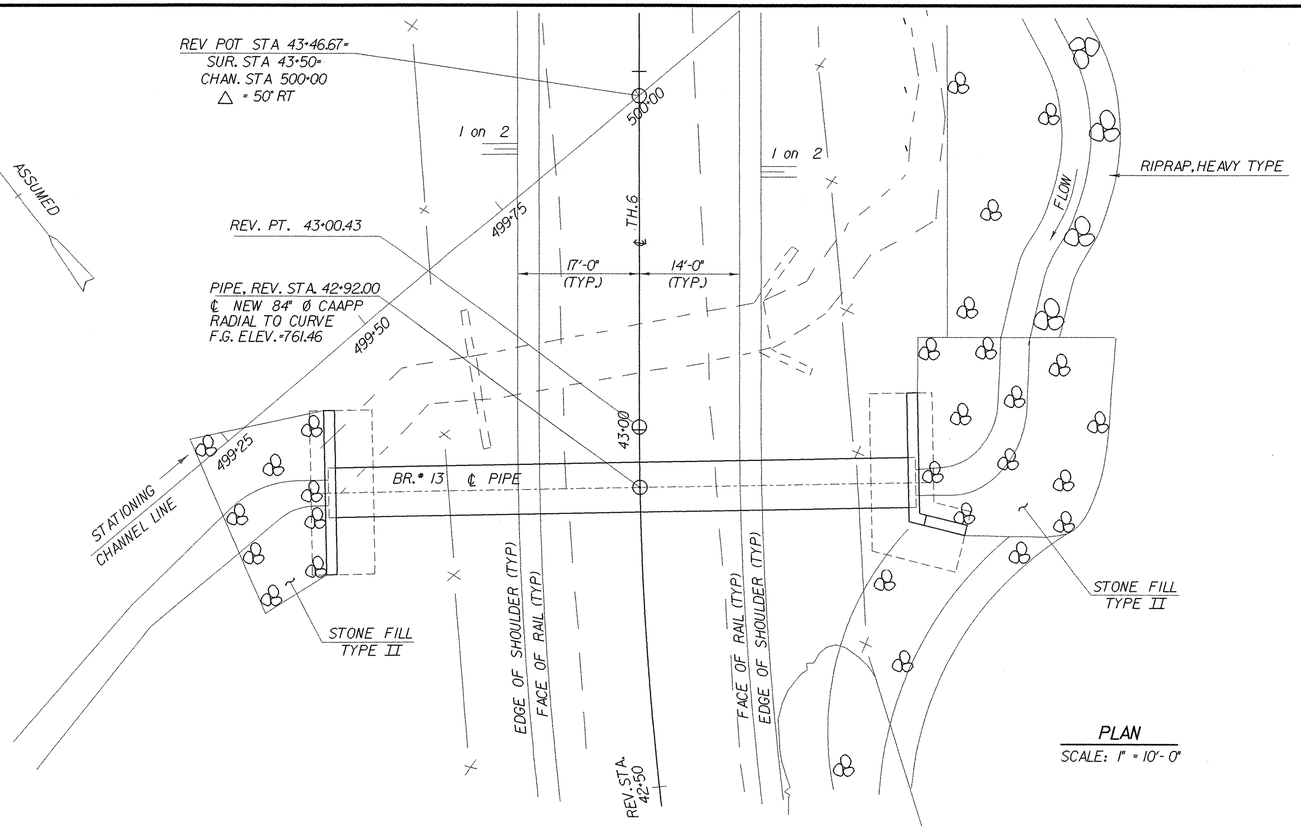

PLAN

SCALE: 1" = 10'-0"

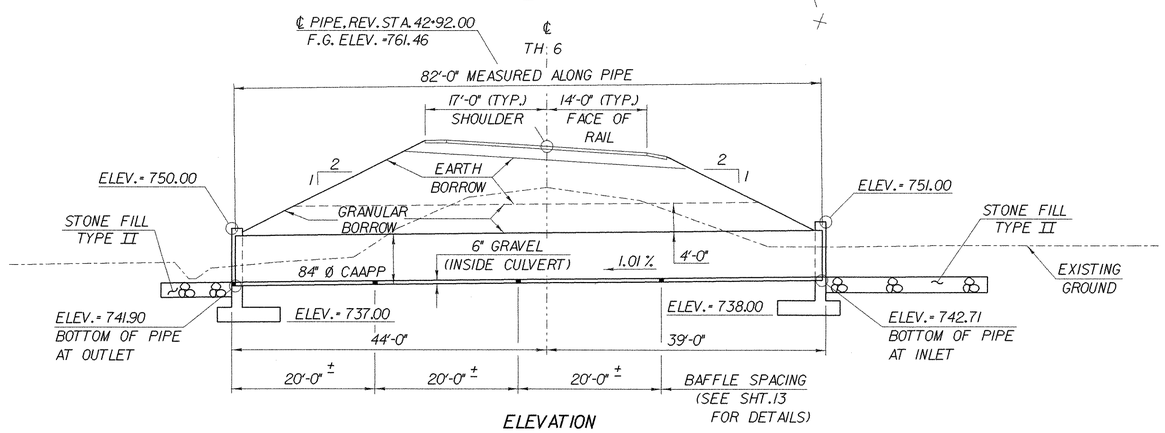

ELEVATION

SCALE: 1" = 10'-0"

~ NOTES ~

1. ALL MATERIALS AND CONSTRUCTION SHALL CONFORM TO AGENCY OF TRANSPORTATION STANDARD SPECIFICATIONS FOR CONSTRUCTION DATED 1990. AND THE LATEST A.A.S.H.T.O. STANDARD SPECIFICATIONS FOR HIGWAY BRIDGES. DESIGN IS FOR HS-25 LIVE LOAD.
2. UNLESS OTHERWISE INDICATED. 5 1/3 BOLTS PER LINEAR FOOT ARE REQUIRED ALONG THE LONGITUDINAL SEAMS FOR ALUMINUM PLATES. ALL CONNECTIONS FOR STRUCTURAL PLATE SECTIONS SHALL BE MADE WITH BOLTS MEETING ASTM A-307 (GALVANIZED AFTER FABRICATION).
3. IN LONGITUDINAL JOINTS LOCATED AT THE SPRING LINE OF PLATE PIPE ARCHES OR WITHIN 20° OF HORIZONTAL ON PIPES. THE BOLT NEAREST THE VISIBLE EDGE OF LAPPED JOINTS. AS VIEWED FROM INSIDE THE PIPE, SHALL BE PLACED IN THE VALLEY OF THE CORRUGATIONS.
4. WHEN NORMAL CONSTRUCTION OR REGULAR TRAFFIC IS MAINTAINED OVER THE PIPE THE CONTRACTOR SHALL MAINTAIN A MINIMUM COVER OF THREE (3) FEET OF COMPACTED MATERIAL.
5. ALUMINUM PIPE WHICH IS TO BE IN CONTACT WITH CONCRETE SHALL HAVE CONTACT SURFACES THOROUGHLY COATED WITH BITUMINOUS OR ASPHALTIC PAINT.
6. PIPES SHALL BE FACTORY ELONGATED 5% (PIPE ARCHES SHALL NOT BE ELONGATED).
7. THE ENDS OF THE PIPE SHALL BE CUT SQUARE.
8. THE CONTRACTOR SHALL INCLUDE AT THE OUTLET END. A 10 FOOT PIECE OF 6" UNDERDRAIN EACH SIDE ON SAME GRADIENT AS CULVERT CONFORMING TO SUBSECTIONS 711.01. THE COST SHALL BE INCLUDED IN THE UNIT PRICE BID FOR THE CULVERT PIPE.

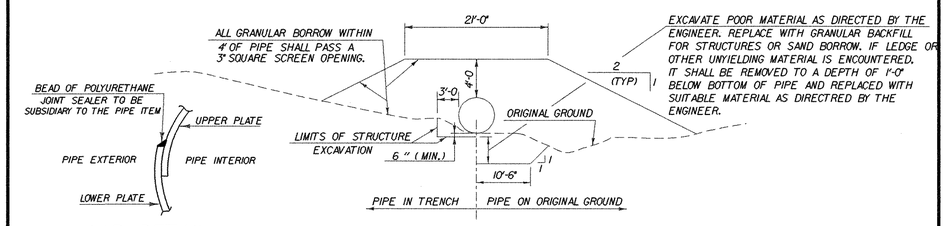

LAP DETAIL

EXCAVATION AND BACKFILL DETAILS

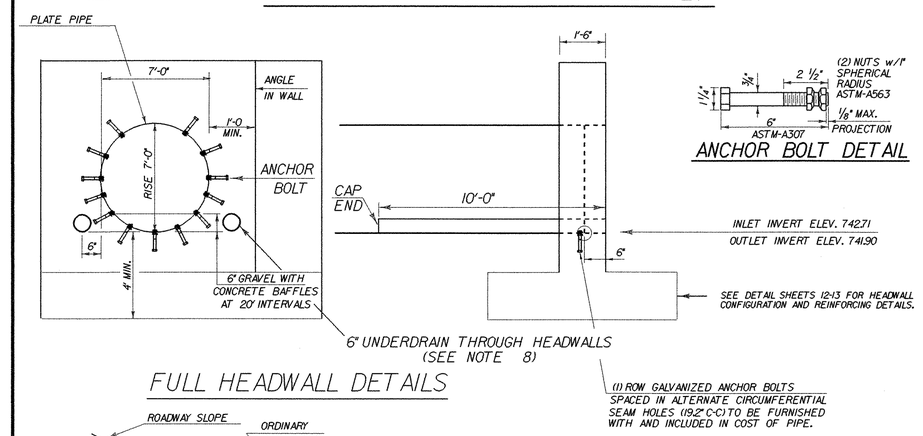

ANCHOR BOLT DETAIL

FULL HEADWALL DETAILS

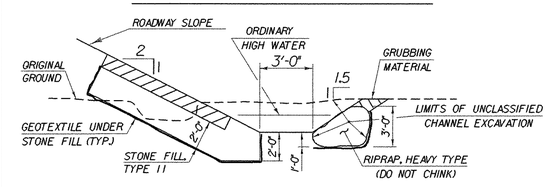

TYPICAL CHANNEL SECTION
(ABOVE INLET CHANNEL)

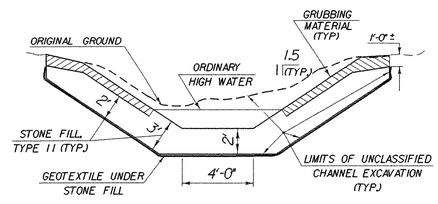

TYPICAL CHANNEL SECTION
@ HEADWALLS

~ HYDRAULIC DATA ~

DRAINAGE AREA 1.32 SQ. MI. / 3.42 SQ. KM. DESIGN FLOW Q 25 DESIGN OUTLET VELOCITY 10.3 FPS

DESIGN TAILWATER DEPTH Q25 = 4.5' ELEVATION 746.4

ORDINARY HIGH WATER DEPTH 2.4'

Q 10 FLOW	200 CFS	HEADWATER ELEVATION	748.5
Q 25 FLOW	270 CFS	HEADWATER ELEVATION	749.8
Q 50 FLOW	320 CFS	HEADWATER ELEVATION	750.7
Q 100 FLOW	370 CFS	HEADWATER ELEVATION	751.6

COMMENTS

DETAILS OF STRUCTURAL PLATE PIPE CULVERTS

	ALUMINUM
CORRUGATIONS	9" X 2 1/2"
SIZE OF PIPE OR PIPE ARCH	84" Ø
WATERWAY AREA	38.1 SF
PLATE THICKNESS (COATED)	0.125"
BOLT SIZE	3/4" Ø
WEIGHT PER LINEAR FOOT	61.3 LBS
TOTAL WEIGHT	5027 LBS

STATE OF VERMONT
AGENCY OF TRANSPORTATION

Town Of	DERBY	Bridge No.	13
Highway No.	T. H. 6	Log Sta. / Surv. Sta.	
T. H. 6 OVER BROOK			
PIPE DETAIL SHEET			
Designed By B. DONALD		Drawn By S. FUGERE	
Checked By R. WHITCOMB	Date 1/94	Bridge Design Supervisor J. H. WEAVER	Date 1/94
PROJECT DERBY		PROJECT NO. TH 2 - 8910	
I.G.C. Info. /str3/88JIII/sJIIIpl.dgn		sJIIIplJ	
Bridge Sheet No.		Sheet 10 of 29	

PLOTTED 18-APR-1996

GENERAL NOTES

1. ALL MATERIALS AND CONSTRUCTION SHALL CONFORM TO STATE OF VERMONT AGENCY OF TRANSPORTATION, STANDARD SPECIFICATIONS FOR CONSTRUCTION DATED 1990 AND ITS LATEST REVISIONS, AND THE AASHTO STANDARD SPECIFICATIONS FOR HIGHWAY BRIDGES DATED 1992 AND ITS LATEST REVISIONS.

2. A MINIMUM OF ONE-WAY TRAFFIC SHALL BE MAINTAINED THRU THE PROJECT DURING CONSTRUCTION.

3. THE COST OF ON-PROJECT SIGNS AND BARRICADES SHALL BE SUBSIDIARY TO OTHER CONTRACT ITEMS. THE CONTRACTOR SHALL ALLOW FREE ACCESS TO DRIVES ON THE PROJECT.

4. ANY IN-STREAM CONSTRUCTION SHALL BE ACCOMPLISHED DURING THE PERIOD JUNE 1 TO OCTOBER 1. ANY DEVIATION FROM THIS TIME PERIOD SHALL BE APPROVED IN WRITING BY THE AGENCY OF NATURAL RESOURCES.

5. A PRE-CONSTRUCTION MEETING WILL BE HELD. AT THAT TIME, THE CONTRACTOR WILL SUBMIT AN EROSION/SEDIMENT CONTROL PLAN WITH A SCHEDULE OF EVENTS. THIS PLAN SHALL BE SITE SPECIFIC.

6. THE CONTRACTOR SHALL TAKE ALL PRECAUTIONS NECESSARY TO PREVENT SILTATION OR POLLUTION, ESPECIALLY THE DISCHARGE OF RAW CONCRETE INTO THE BROOK, AS DIRECTED BY THE RESIDENT ENGINEER AND STANDARD SPECIFICATIONS SECTION 105.

7. REMOVAL OF THE EXISTING 72" DIA. CGMP AND HEADWALLS SHALL BE PAID FOR UNDER THE ITEM "REMOVAL OF STRUCTURE". HEADWALLS SHALL BE REMOVED IN THEIR ENTIRETY.

8. THE COSTS OF MAINTAINING TRAFFIC THRU THE PROJECT DURING THE INSTALLATION OF THE NEW PIPE AND HEADWALLS SHALL BE INCLUDED IN THE PRICE BID FOR ITEM 528.10, ONE-WAY TEMPORARY BRIDGE. THE LUMP SUM PRICE BID SHALL BE FULL COMPENSATION FOR PROVIDING, INSTALLING AND REMOVING TEMPORARY EXTENSIONS TO EXISTING PIPE AND CONSTRUCTING AND REMOVING TEMPORARY EMBANKMENTS. THE PIPE EXTENSIONS SHALL BE AT LEAST THE SAME SIZE DIAMETER AS THE EXISTING PIPE AND BE ADEQUATELY ATTACHED TO THE EXISTING PIPE.

9. THE LUMP SUM BID FOR ITEM 614.10, TEMPORARY RELOCATION OF STREAM, SHALL BE FULL COMPENSATION FOR ANY CHANNEL EXCAVATION AND CHANNEL PROTECTION MEASURES NECESSARY FOR RELOCATING THE STREAM DURING THE INSTALLATION OF THE NEW PIPE AND HEADWALLS.

10. ALL EXPOSED EDGES OF CONCRETE SHALL BE CHAMFERED 1" X 1".

11. WATER REPELLENT SHALL BE APPLIED TO ALL EXPOSED CONCRETE SURFACES ON THE HEADWALLS.

12. JOINTS AND SCORE MARKS IN CONCRETE SHALL BE CONSTRUCTED AS INDICATED ON THE PLANS OR AS INDICATED BY THE RESIDENT ENGINEER.

13. THE KEY IN CONCRETE CONSTRUCTION JOINTS SHALL BE MONOLITHIC AND CONTINUOUS FOR THE FULL LENGTH OF THE JOINT. ALL UPWARD KEYS SHALL BE PLACED INTEGRALLY WITH THE CONCRETE BELOW THE JOINT.

14. ALL DIMENSIONS ARE HORIZONTAL OR VERTICAL AND ARE GIVEN AT 68 °F.

15. MINIMUM COVER FOR REINFORCING STEEL SHALL BE 2" ALONG BACK FACES OF WALLS AGAINST EARTH AND 3" ELSEWHERE, UNLESS DIRECTED BY THE RESIDENT ENGINEER.

16. REINFORCING PLACEMENT TOLERANCES SHALL BE:
    SPACING: +/- 1"
    CLEARANCE: +/- 1/4"

17. THE FOLLOWING TABLE OF ALLOWABLE STRESSES AND WEIGHTS APPLY TO THESE PLANS FOR DESIGN PURPOSES:

    CAST-IN-PLACE CONCRETE: f'c = 3500 PSI fc = 1400 PSI
    REINFORCING STEEL (GRADE 60): Ft = 24,000 PSI Fc = 20,000 PSI
    SOIL UNIT WEIGHT: 140 PCF

SEEDING FORMULA
RURAL AREAS

% WT.	LBS./A.	NAME	PUR %	GERM %
37.5	22.5	CREEPING RED FESCUE	98	85
37.5	22.5	TALL FESCUE	95	90
5.0	3.0	RED TOP	95	90
15.0	9.0	BIRDSFOOT TREFOIL	98	85
5.0	3.0	ANNUAL RYEGRASS	95	85
100.0	60.0			

GENERAL NOTES

SEED MIXTURE: SHALL NOT HAVE A WEED CONTENT EXCEEDING 0.40% BY WEIGHT AND SHALL BE FREE OF ALL NOXIOUS SEED.

SEED: TO BE APPLIED PER SEEDING FORMULAS OR AS DIRECTED BY THE ENGINEER.

FERTILIZER: FORMULA 10-20-10, TO BE USED WITH SEED, APPLIED AT THE RATE OF 500 LBS./ACRE. (HYDRO SEEDERS MAY USE 19-19-19 FORMULA).

AGRICULTURAL LIMESTONE: TO BE APPLIED AT THE RATE OF 2 TONS/ACRE, OR AS DIRECTED BY THE ENGINEER.

HAY MULCH: TO BE PLACED ON EARTH SLOPES AT THE RATE OF 2 TONS/ACRE, OR AS DIRECTED BY THE ENGINEER.

TOPSOIL: TO BE USED WITH SEED AS INDICATED ON THE PLANS, OR AS DIRECTED BY THE ENGINEER.

MARKER POSTS: TO BE PLACED AS INDICATED OR AS DIRECTED BY THE ENGINEER.

TACK COAT: EMULSIFIED ASPHALT IS TO BE APPLIED AT THE RATE OF 0.015 GAL/SY BETWEEN SUCCESSIVE COURSES OF PAVEMENT AS DIRECTED BY THE ENGINEER.

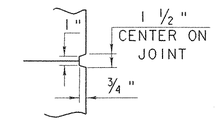

SCORE MARK DETAIL
NTS

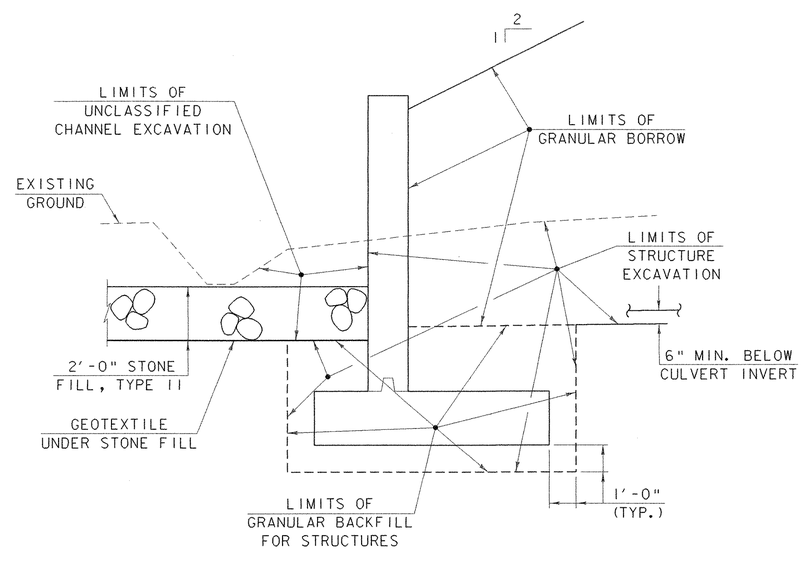

TYPICAL EARTHWORK SECTION
NOT TO SCALE

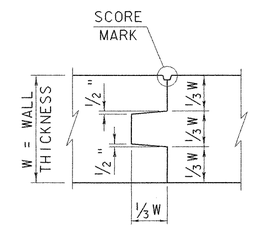

TYPICAL CONCRETE CONSTRUCTION JOINT
NTS

STATE OF VERMONT AGENCY OF TRANSPORTATION			
Town Of DERBY		Bridge No. 13	
Highway No. T. H. 6		Log Sta. ———	
		Surv. Sta. ———	
T. H. 6 OVER BROOK			
GENERAL NOTES			
Designed By R. WHITCOMB		Drawn By G. ROY	
Checked By R. WHITCOMB	Date 12/95	Bridge Design Supervisor J. H. WEAVER	Date 12/95
PROJECT DERBY		PROJECT NO. TH 2 - 8910	
I.G.C. Info. /str3/88 jlll/s jlllgn.dgn			s jlllgn1
Bridge Sheet No.		Sheet 11 of 29	

PLOTTED 11-APR-1996

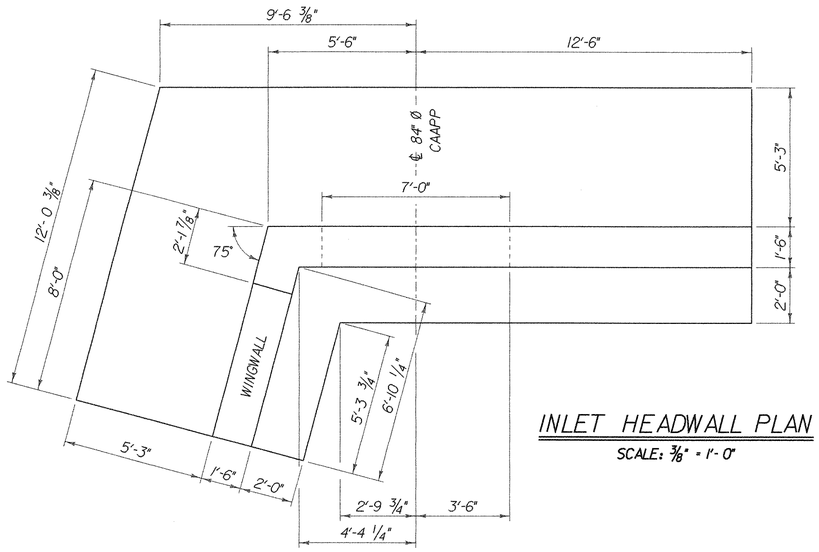

INLET HEADWALL PLAN

SCALE: 3/8" = 1'-0"

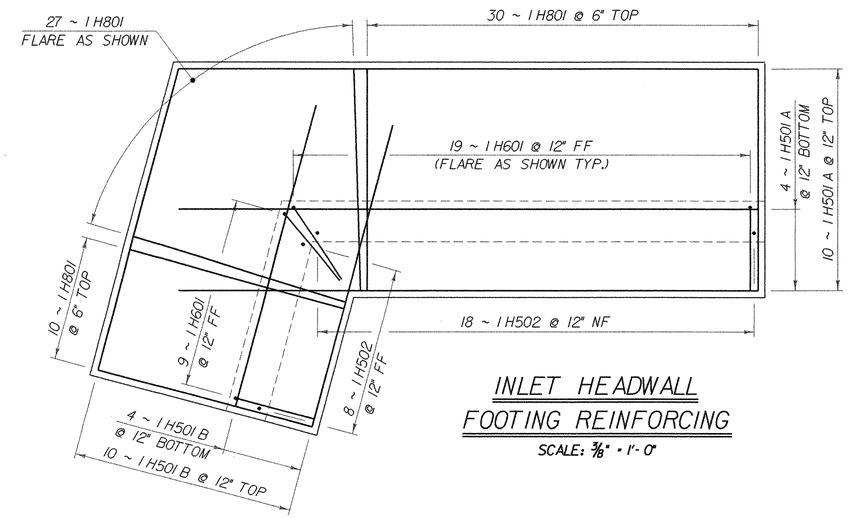

INLET HEADWALL FOOTING REINFORCING

SCALE: 3/8" = 1'-0"

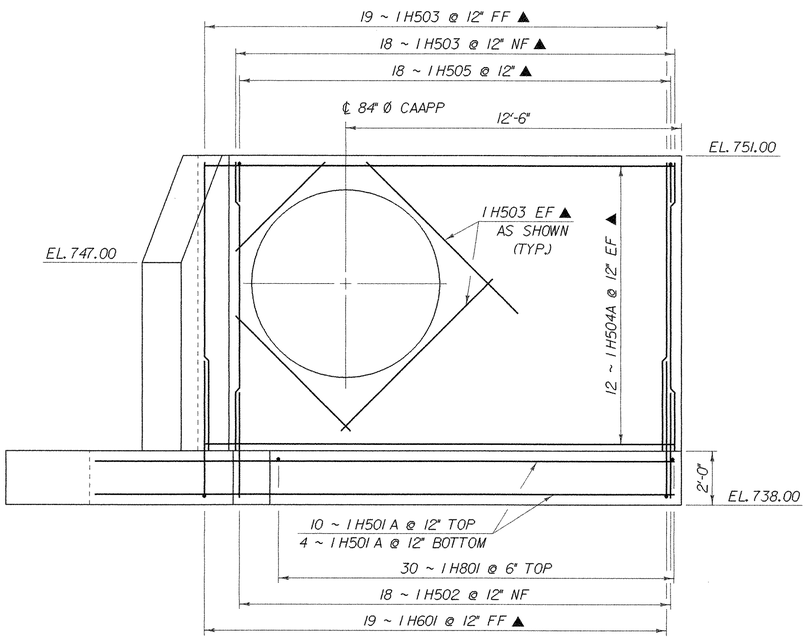

INLET HEADWALL ELEVATION

SCALE: 3/8" = 1'-0"

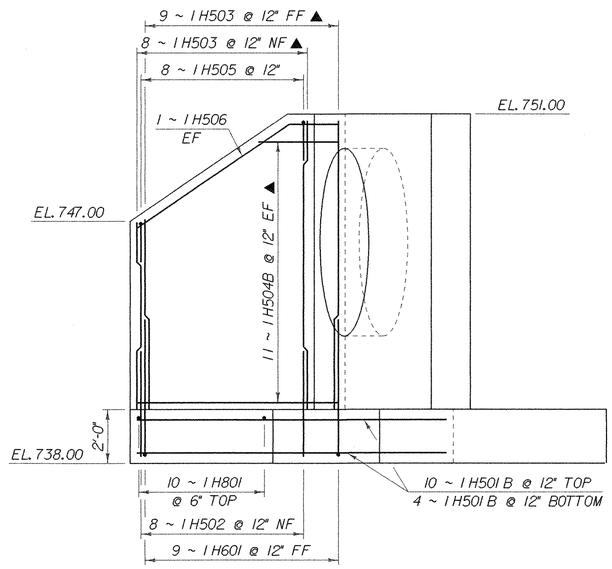

WINGWALL ELEVATION

SCALE: 3/8" = 1'-0"

NOTE:

NF = NEAR FACE
FF = FAR FACE
EF = EACH FACE
▲ = CUT TO FIT IN FIELD
3" CLR. UNLESS OTHERWISE SPECIFIED ON THE PLANS.

STATE OF VERMONT
AGENCY OF TRANSPORTATION

Town Of	DERBY	Bridge No.	13
Highway No.	T. H. 6	Log Sta. / Surv. Sta.	—
T. H. 6 OVER BROOK			
INLET HEADWALL DETAILS			
Designed By R. WHITCOMB		Drawn By G. ROY	
Checked By R. WHITCOMB	Date 12/95	Bridge Design Supervisor J. H. WEAVER	Date 12/95
PROJECT DERBY		PROJECT NO. TH 2 - 8910	
I.G.C. Info. /str3/88jlll/sjlllhw.dgn			sjlllhw1
Bridge Sheet No.		Sheet 12 of 29	

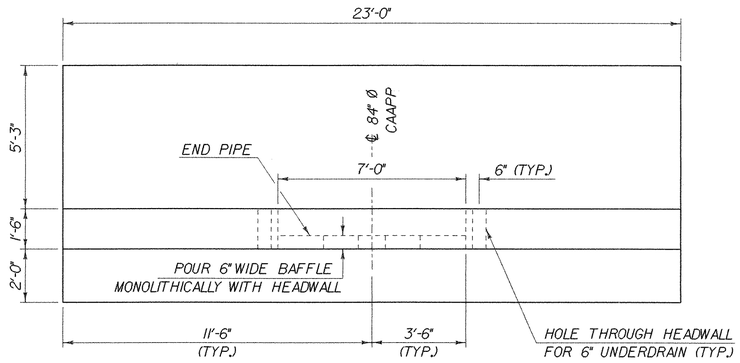

OUTLET HEADWALL PLAN

SCALE: 3/8" = 1'-0"

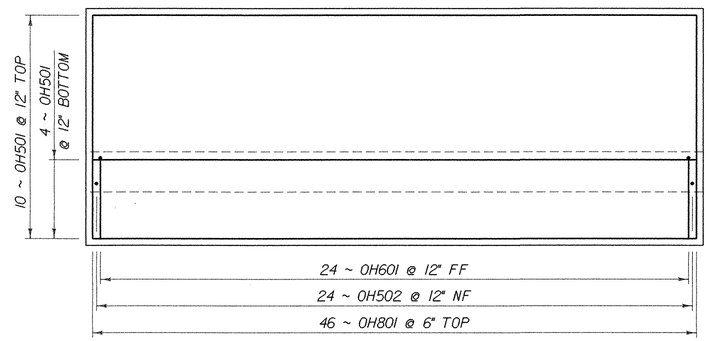

OUTLET HEADWALL FOOTING REINFORCING

SCALE: 3/8" = 1'-0"

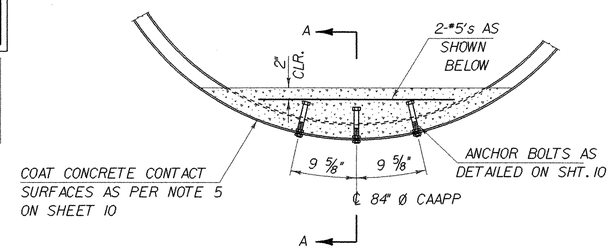

PARTIAL PIPE SECTION

PIPE BAFFLE DETAILS

SCALE: 1" = 1'-0"

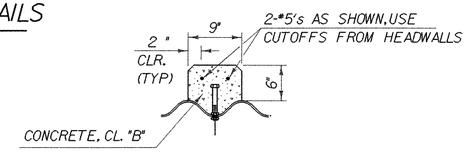

SECTION A - A

THE BAFFLES LOCATED WITHIN THE PIPE SHALL NOT BE INSTALLED UNTIL THE FULL DEPTH OF THE GRANULAR BORROW BACKFILL HAS BEEN PLACED.

ALL COSTS OF PLACING THE PIPE BAFFLES SHALL BE INCLUDED IN THE PRICE BID FOR THE 84" CAAPP.

SEE SHEET 10 FOR BAFFLE LOCATIONS. THE SPACING WILL BE ADJUSTED TO BE CENTERED ON THE NEAREST CORRUGATION VALLEY.

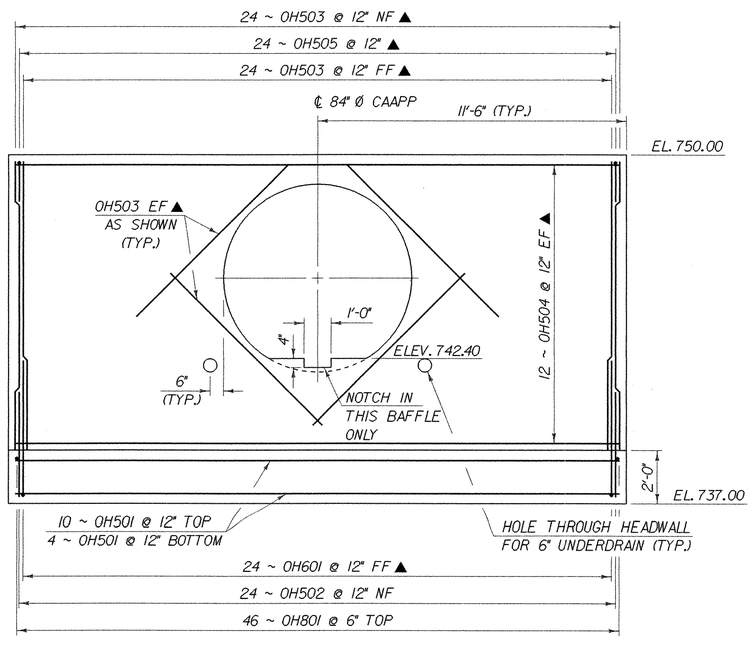

OUTLET HEADWALL ELEVATION

SCALE: 3/8" = 1'-0"

NOTE:

NF = NEAR FACE
FF = FAR FACE
EF = EACH FACE
▲ = CUT TO FIT IN FIELD
3" CLR. UNLESS OTHERWISE SPECIFIED ON THE PLANS.

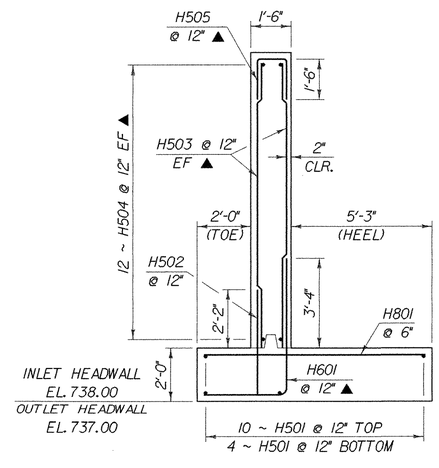

TYPICAL HEADWALL & WINGWALL SECTION

SCALE: 3/8" = 1'-0"

STATE OF VERMONT
AGENCY OF TRANSPORTATION

Town Of DERBY		Bridge No. 13	
Highway No. T. H. 6		Log Sta. ———	
		Surv. Sta. ———	
T. H. 6 OVER BROOK			
OUTLET HEADWALL DETAILS			
Designed By R. WHITCOMB		Drawn By G. ROY	
Checked By R. WHITCOMB	Date 12/95	Bridge Design Supervisor J. H. WEAVER	Date 12/95
PROJECT DERBY		PROJECT NO. TH 2 - 8910	
I.G.C. Info. /str3/88J111/sJ111hw.dgn			sJ111o1w1
Bridge Sheet No.		Sheet 13 of 29	

ITEM	NO. PIECES	SIZE	LENGTH	MARK	TYPE	A	B	C	D	E	F	G	H	J	K	R	O
				INLET HEADWALL													
5	14	5	21-7	1H501A	STR												
6	14	5	11-7	1H501B	STR												
7	26	5	3-11	1H502	STR												
8	62	5	10-9	1H503	STR	▲											
9	24	5	17-6	1H504A	STR	▲											
10	* 23	5	7-6	1H504B	STR	▲											
12	26	5	4-1	1H505	17	▲	1-6	1-1	1-6								
13	2	5	8-8	1H506	19			6-10	1-10				1-0		1-6		
15	* 29	6	8-2	1H601	17			3-1	5-1								
17	* 68	8	8-3	1H801	STR												
				OUTLET HEADWALL													
22	14	5	22-6	0H501	STR												
23	24	5	3-11	0H502	STR												
24	* 57	5	10-9	0H503	STR	▲											
25	24	5	22-6	0H504	STR	▲											
27	24	5	4-1	0H505	17	▲	1-6	1-1	1-6								
29	* 25	6	8-2	0H601	17			3-1	5-1								
31	* 47	8	8-3	0H801	STR												

~ NOTES ~

1. UNLESS OTHERWISE DESIGNATED, ALL BAR REINFORCEMENT FOR CONCRETE IN SIZES UP TO AND INCLUDING NO. 18 SHALL CONFORM TO THE REQUIREMENTS OF THE "SPECIFICATIONS FOR DEFORMED BILLET-STEEL BARS FOR CONCRETE REINFORCEMENT", AASHTO M 31(ASTM A 615-S1). ALL BARS SHALL BE GRADE 60, UNLESS OTHERWISE DESIGNATED.
2. FOR TYPICAL BENDING DETAILS, RECOMMENDED PIN DIAMETER "D" OF BENDS AND HOOKS, AND OTHER STANDARD PRACTICE, SEE CURRENT CONCRETE REINFORCING STEEL INSTITUTE "MANUAL OF STANDARD PRACTICE".
3. BARS WHICH REQUIRE MORE ACCURATE BENDING THAN STANDARD PRACTICES SHOULD HAVE LIMITS INDICATED.
4. ALL DIMENSIONS ARE OUT TO OUT OF BAR EXCEPT "A" AND "G" ON STANDARD 180 DEGREE AND 135 DEGREE HOOKS.
5. "J" DIMENSION ON 180 DEGREE HOOKS TO BE SHOWN ONLY WHERE NECESSARY TO RESTRICT HOOK SIZE. OTHERWISE, STANDARD HOOKS ARE TO BE USED.
6. "H" DIMENSION ON STIRRUPS TO BE SHOWN ONLY WHEN NECESSARY TO MAINTAIN CLEARANCES.
7. WHERE SLOPE DIFFERS FROM 45 DEGREES, DIMENSIONS "H" AND "K" MUST BE SHOWN.
8. ▲ DENOTES BARS TO BE CUT IN FIELD.
9. * DENOTES ONE EXTRA BAR ADDED FOR TESTING PURPOSES.
10. △ DENOTES TWO EXTRA BARS ADDED FOR TESTING PURPOSES.
11. "E" IN PREFIX DENOTES EPOXY COATED REINFORCING STEEL.

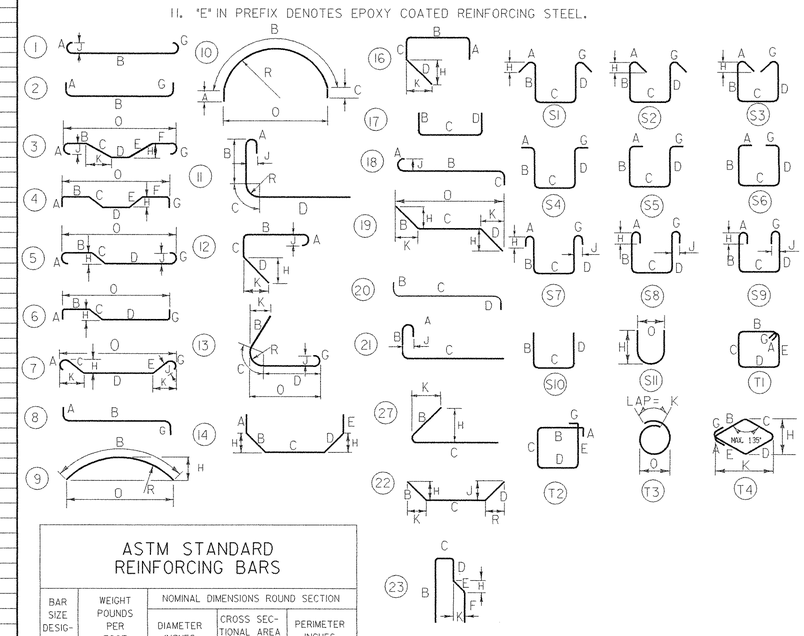

ASTM STANDARD REINFORCING BARS

BAR SIZE DESIGNATION	WEIGHT POUNDS PER FOOT	NOMINAL DIMENSIONS ROUND SECTION		
		DIAMETER INCHES	CROSS SECTIONAL AREA SQ. INCHES	PERIMETER INCHES
#3	.376	.375	.11	1.178
#4	.668	.500	.20	1.571
#5	1.043	.625	.31	1.963
#6	1.502	.750	.44	2.356
#7	2.044	.875	.60	2.749
#8	2.670	1.000	.79	3.142
#9	3.400	1.128	1.00	3.544
#10	4.303	1.270	1.27	3.990
#11	5.313	1.410	1.56	4.430
#14	7.65	1.693	2.25	5.32
#18	13.60	2.257	4.00	7.09

STATE OF VERMONT
AGENCY OF TRANSPORTATION

Town Of	DERBY	Bridge No.	13
Highway No.	T. H. 6	Log Sta. / Surv. Sta.	———
T. H. 6 OVER BROOK			
REINFORCING STEEL SCHEDULE			
Designed By R. WHITCOMB		Drawn By G. ROY	
Checked By R. WHITCOMB	Date 12/95	Bridge Design Supervisor J. H. WEAVER	Date 12/95
PROJECT DERBY		PROJECT NO. TH 2 - 8910	
I.G.C. info. /str3/88]]]l/s]]]lrf.dgn		s]]]lrf.]	
Bridge Sheet No.		Sheet 14 of 29	

PLOTTED 11-APR-1996

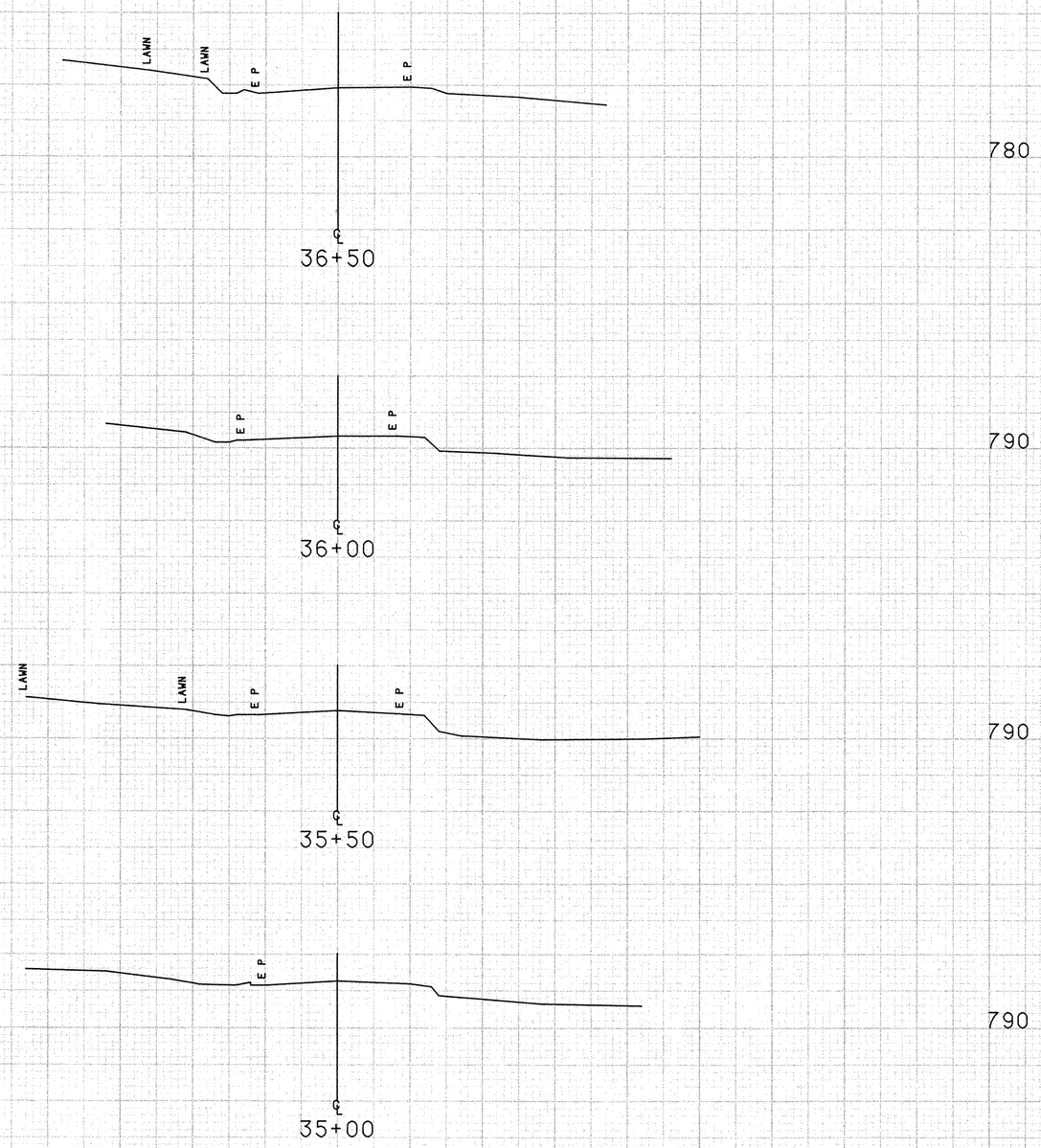

SCALE 10 FEET

FROM STA. 35+00		TO STA. 36+50	
PROJECT NAME	DERBY M1		
NO.	TH28910		PLOTTED 05/16/89
SURVEYED BY	L.NOYES	03/89 0219	
SHEET 15 OF 29 SHEETS			

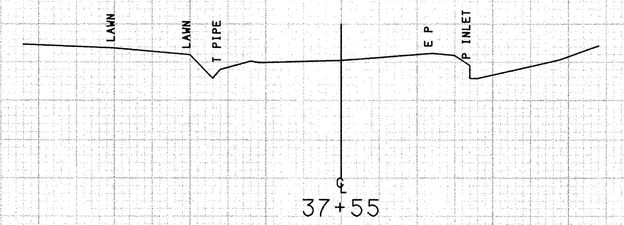

780

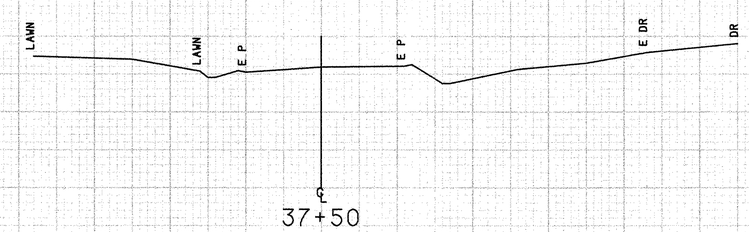

780

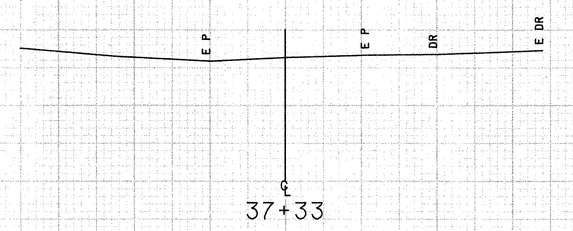

780

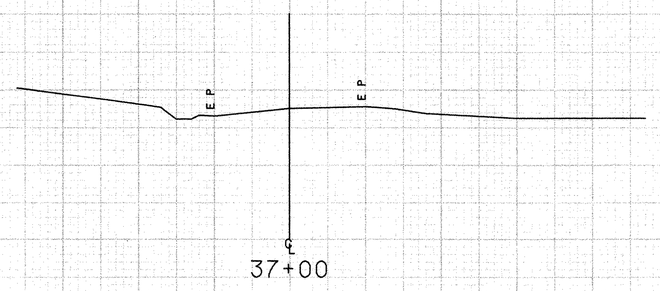

780

FROM STA. 37+00 TO STA. 37+55
PROJECT NAME DERBY M1
NO. TH28910 PLOTTED 05/16/89
SURVEYED BY L.NOYES 03/89 0219
SHEET 16 OF 29 SHEETS

SCALE 10 FEET

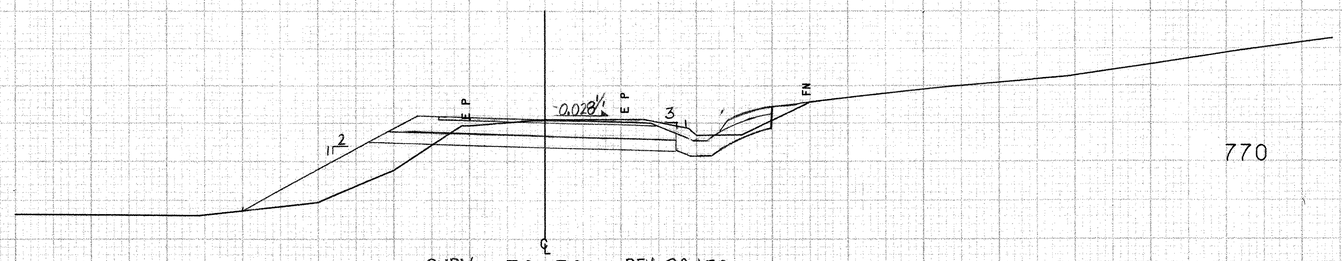

770

SURV. 39+50 = REV. 39+50

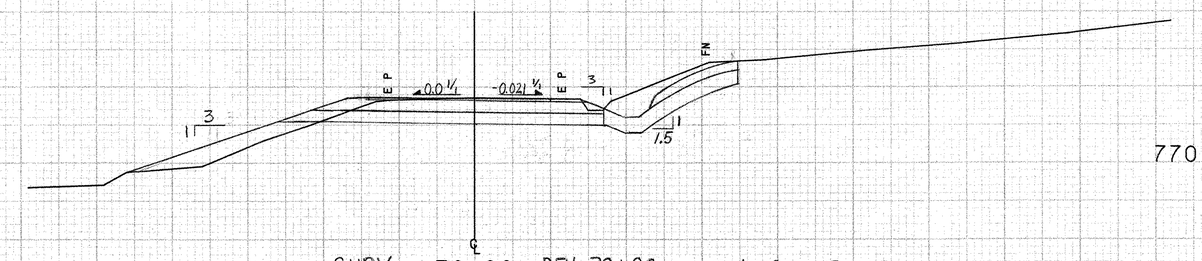

770

SURV. 39+00 = REV. 39+00

REV. 39+00 RT. BEGIN STONE FILL, TYPE II
BEGIN GRUBBING MAT'L.

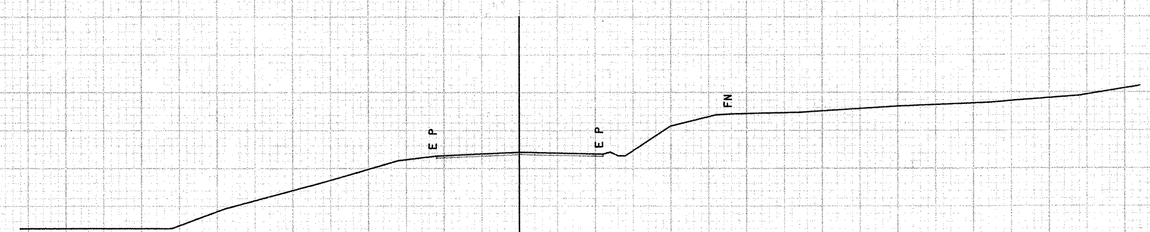

780

38+50

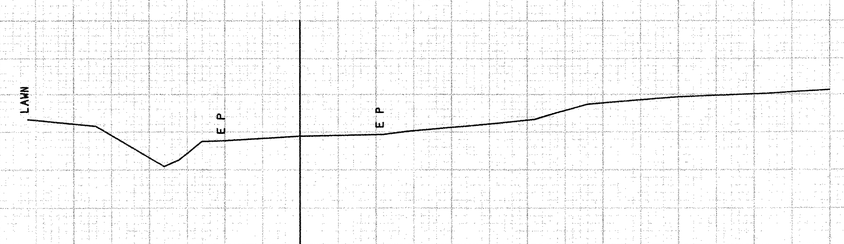

780

38+00

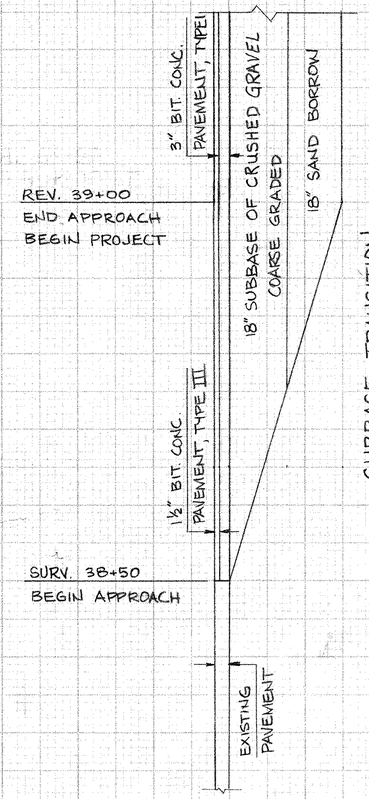

SUBBASE TRANSITION
NTS

SCALE 10 FEET

FROM STA. 38+00		TO STA. 39+50	
PROJECT NAME	DERBY M1		
NO.	TH28910		PLOTTED 05/16/89
SURVEYED BY	L.NOYES		03/89 0219
SHEET 17 OF 29 SHEETS			

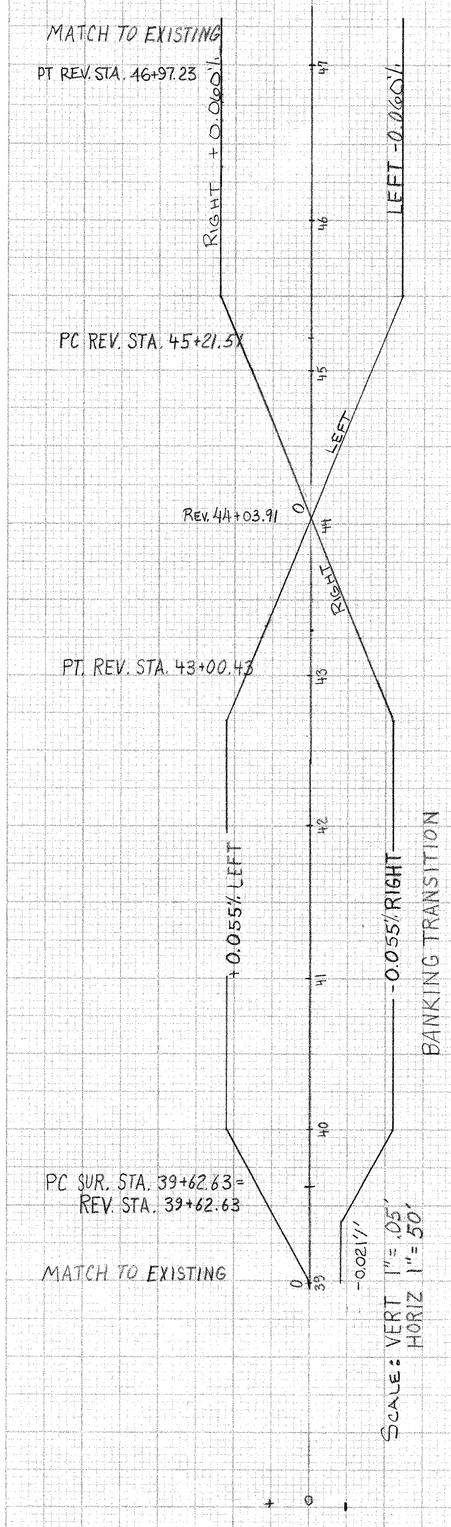

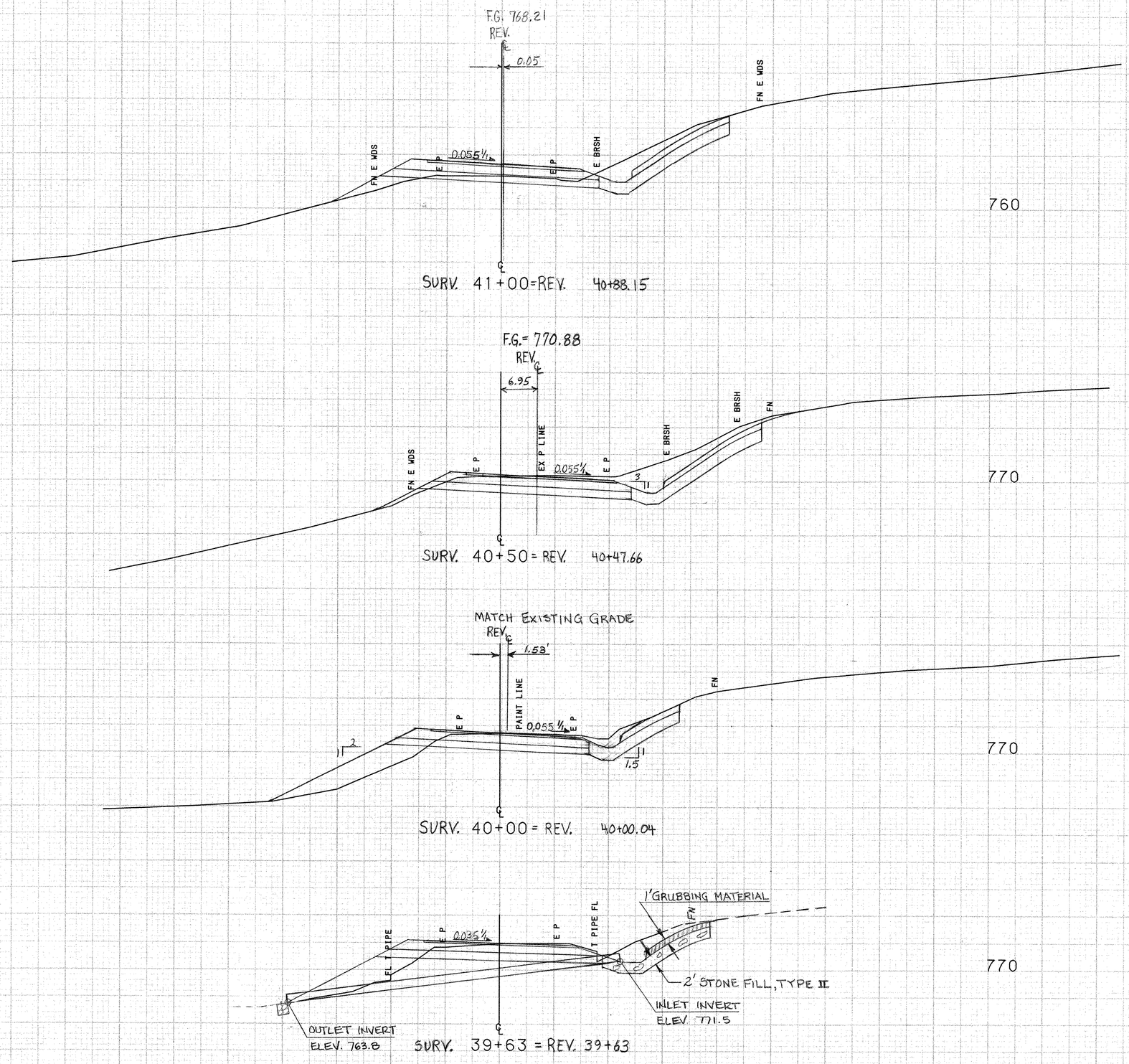

FROM STA. 39+63		TO STA. 41+00	
PROJECT NAME	DERBY M1		
NO.	TH28910		PLOTTED 05/16/89
SURVEYED BY	L. NOYES	03/89	0219
SHEET 18 OF 29 SHEETS			

SCALE 10 FEET

REV. 42+84 RT.
END TRENCH EXCAVATION

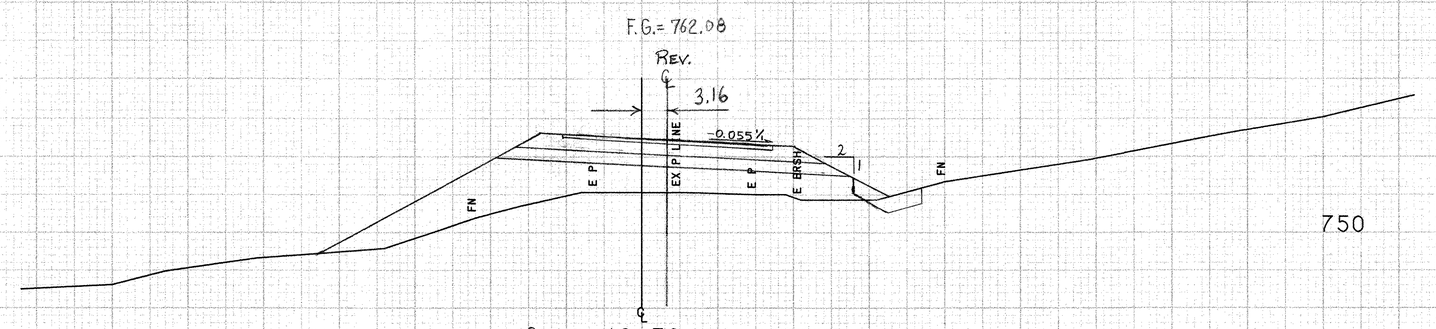

SURV. 42+50=REV. 42+46.55

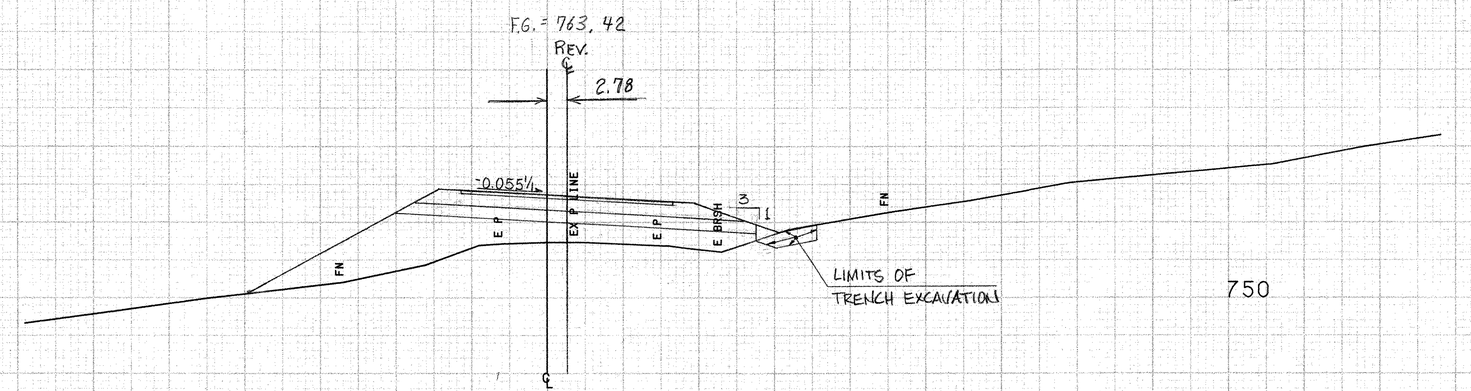

SURV. 42+00=REV. 41+98.39

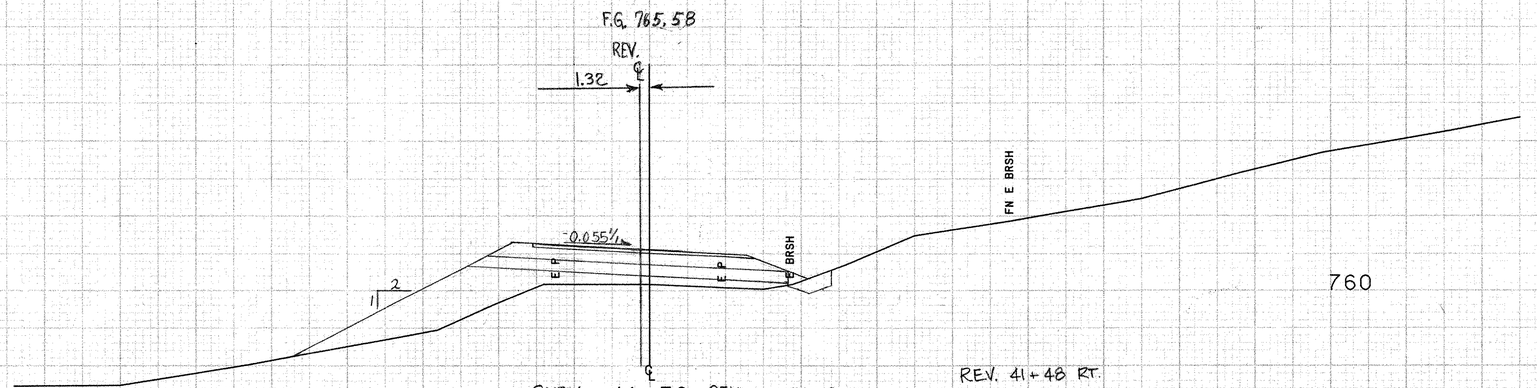

SURV. 41+50=REV. 41+48.20

REV. 41+48 RT.
END GRUBBING MAT'L.
BEGIN TRENCH EXCAVATION

SCALE 10 FEET

FROM STA. 41+50		TO STA. 42+50	
PROJECT NAME	DERBY M1		
NO.	TH28910		PLOTTED 05/16/89
SURVEYED BY	L.NOYES	03/89 0219	
SHEET 19 OF 29 SHEETS			

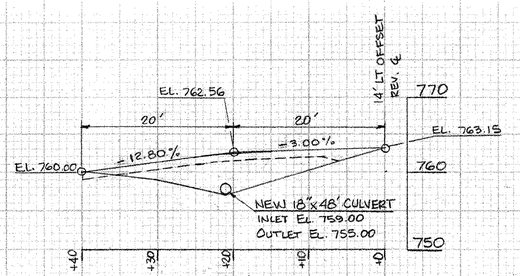

FIELD DRIVE PROFILE

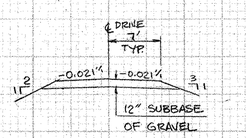

FIELD DRIVE SECTION

CONSTRUCT 14' FIELD DRIVE
REV. 44+25 LT.

REV. 44+32 RT.
END STONE FILL, TYPE II

REV. 44+28 RT.
END RIPRAP, HEAVY TYPE

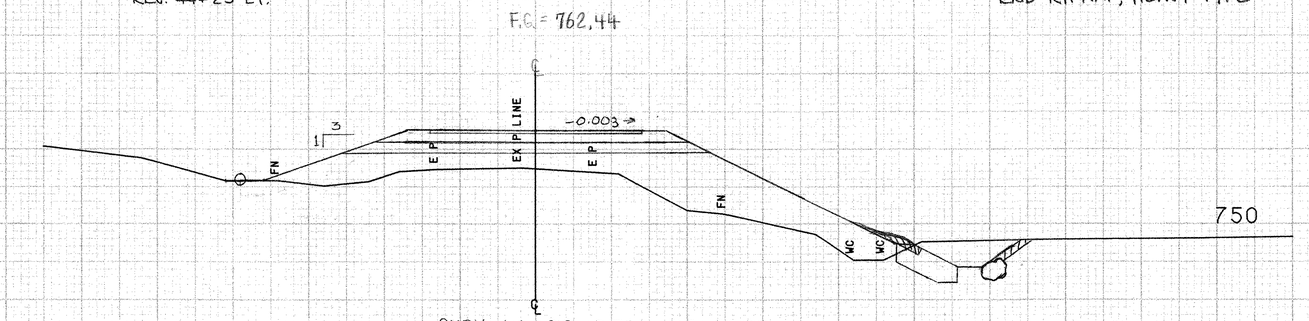

SURV. 44+00 = REV. 43+96.67

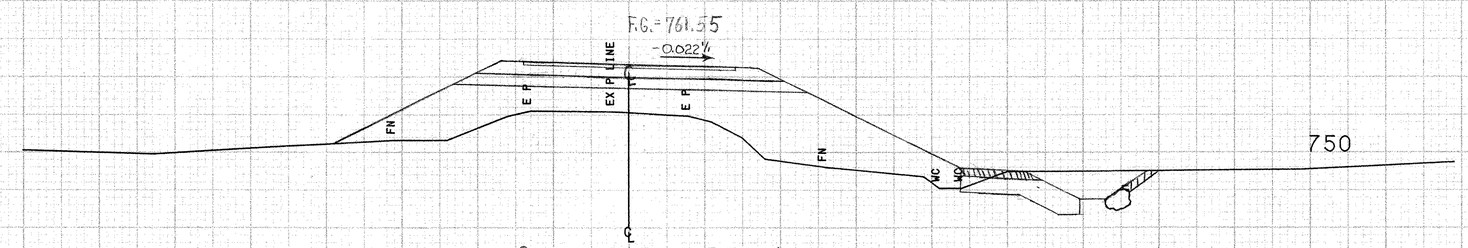

SURV. 43+50 = REV. 43+46.67

REV. 43+12 RT.
BEGIN RIPRAP, HEAVY TYPE

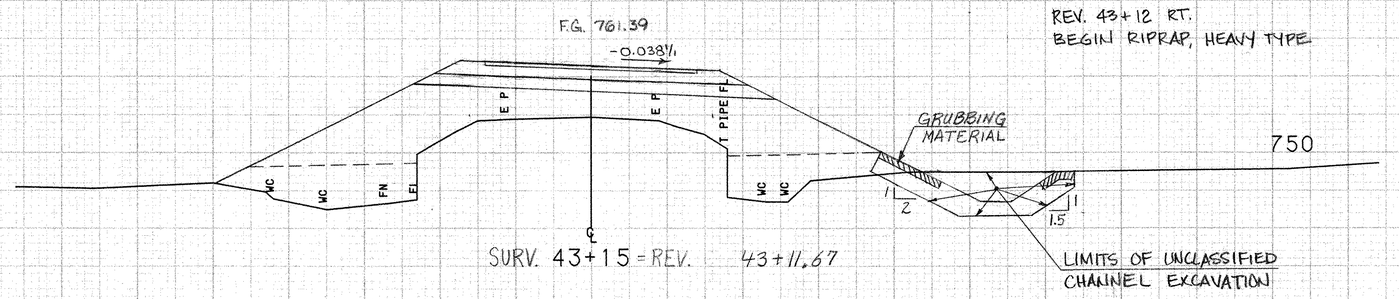

SURV. 43+15 = REV. 43+11.67

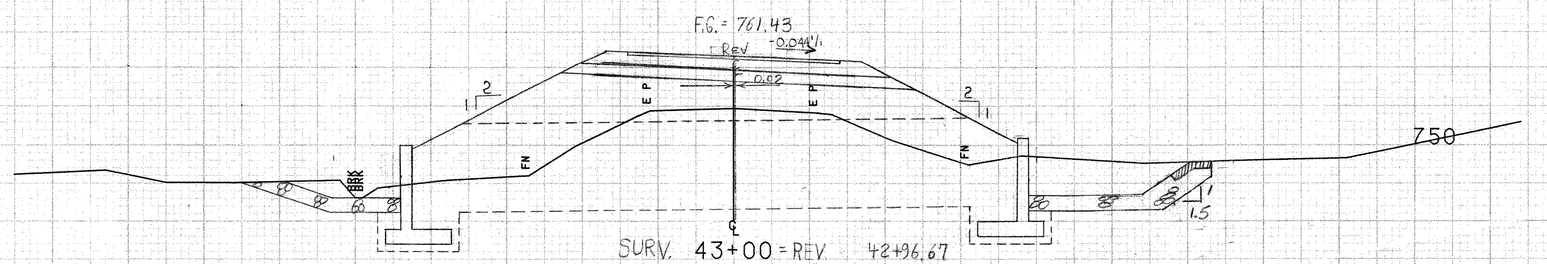

SURV. 43+00 = REV. 42+96.67

FROM STA. 43+00		TO STA. 44+00	
PROJECT NAME	DERBY M1		
NO.	TH28910		PLOTTED 05/16/89
SURVEYED BY	L. NOYES	03/89	0219
SHEET 20 OF 29 SHEETS			

SCALE 10 FEET

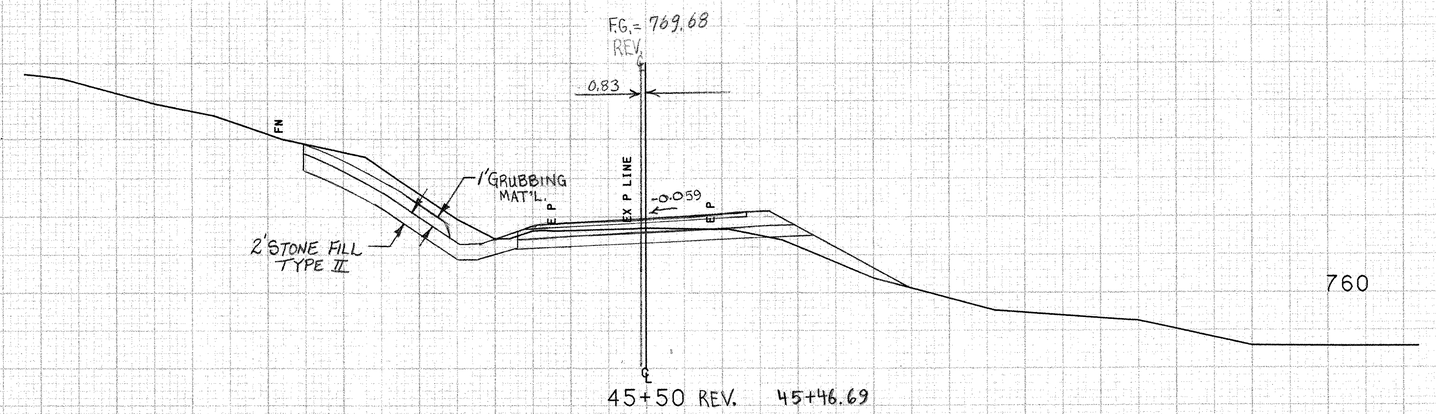

REV. 44+97 LT.
END TRENCH EXCAVATION
BEGIN GRUBBING MATERIAL

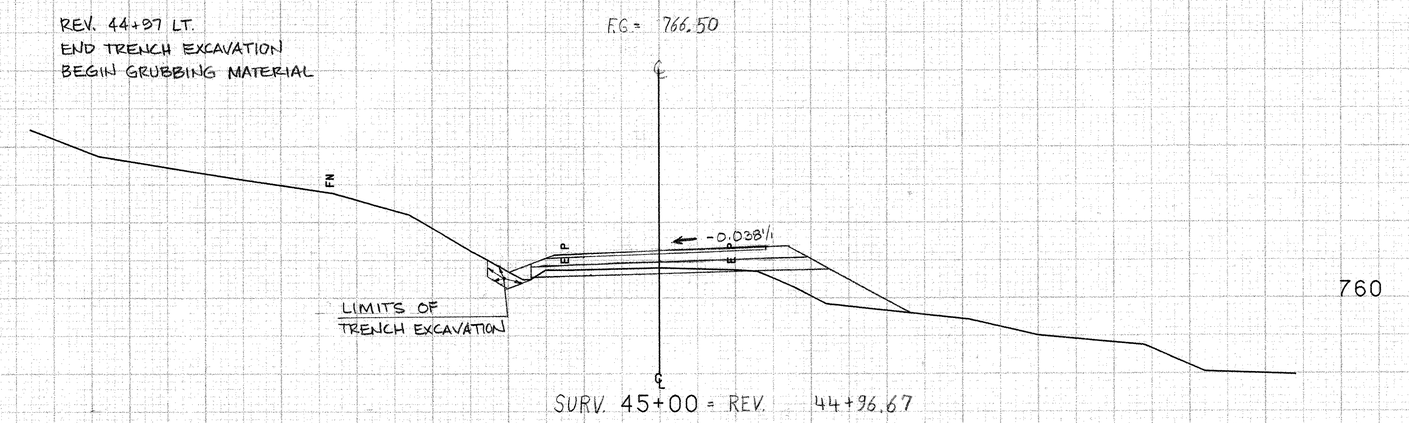

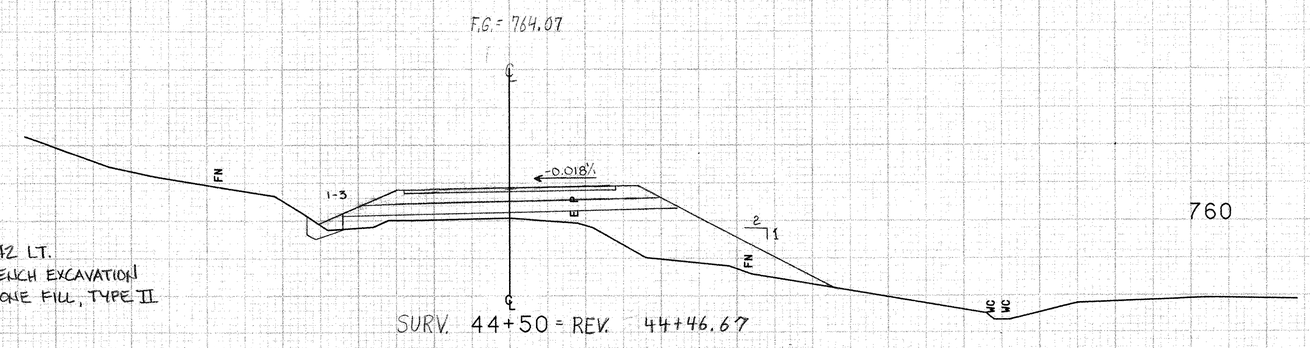

REV. 44+42 LT.
BEGIN TRENCH EXCAVATION
BEGIN STONE FILL, TYPE II

SCALE 10 FEET

FROM STA. 44+50		TO STA. 45+50	
PROJECT NAME	DERBY M1		
NO.	TH28910		PLOTTED 05/16/89
SURVEYED BY	L.NOYES	03/89	0219
SHEET 21 OF 29 SHEETS			

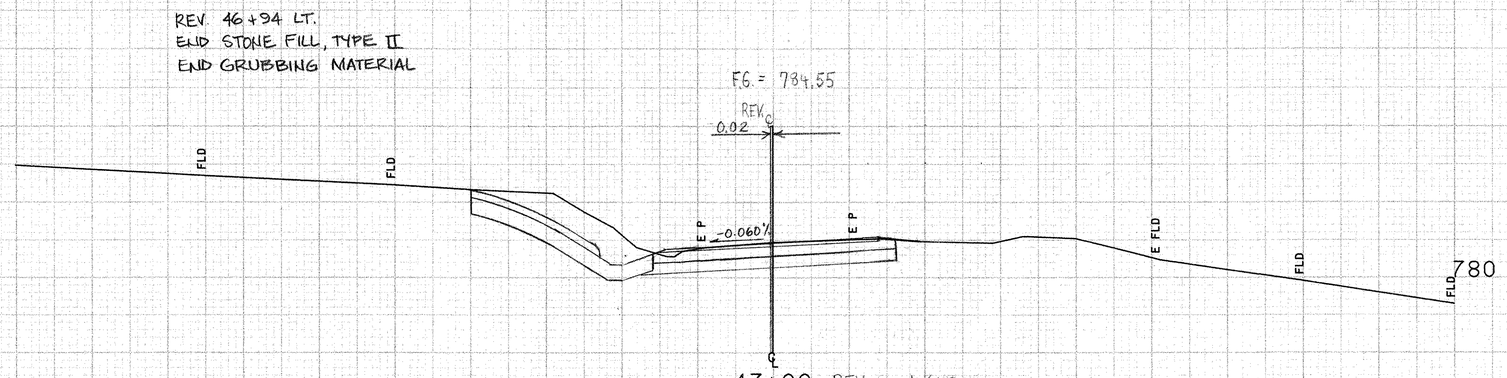

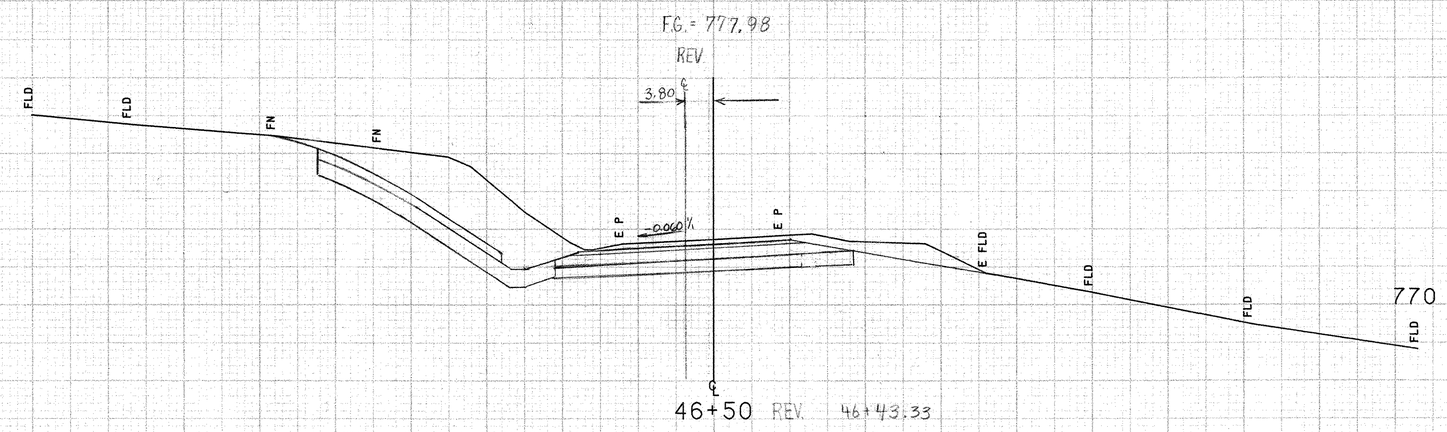

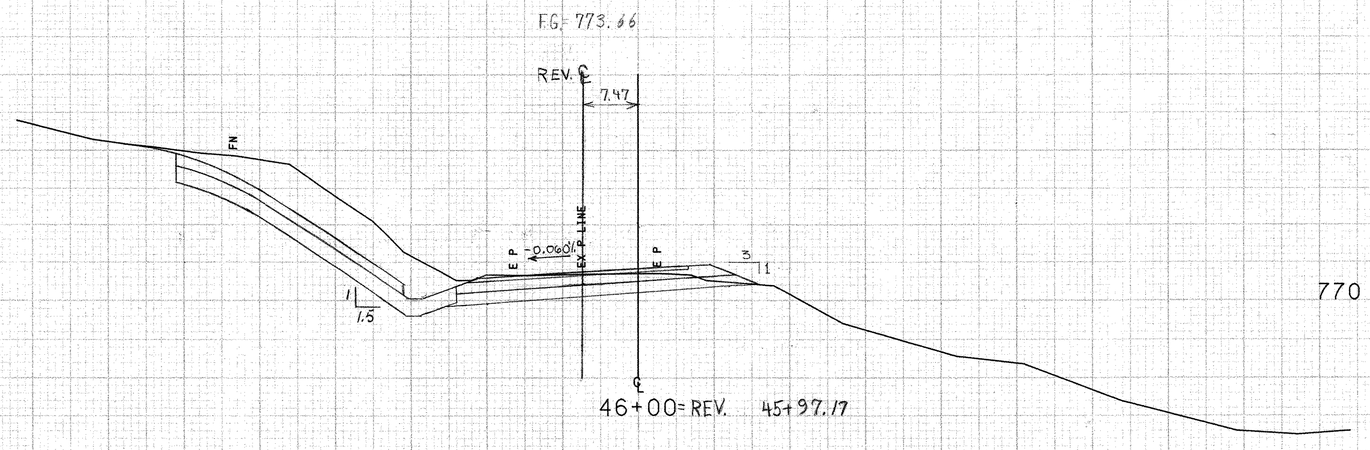

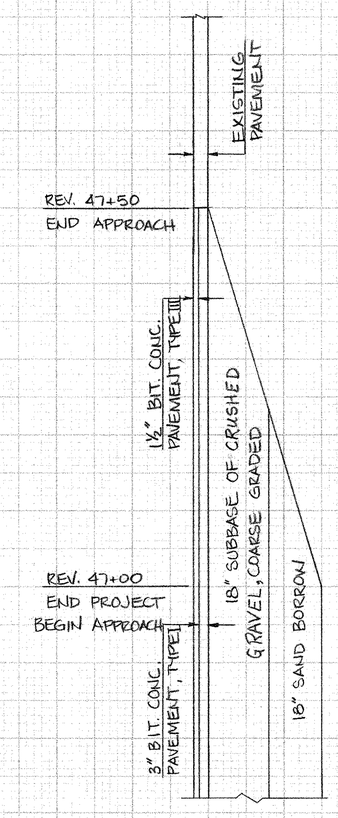

SUBBASE TRANSITION
NTS

SCALE 10 FEET

FROM STA. 46+00		TO STA. 47+00	
PROJECT NAME	DERBY M1		
NO.	TH28910		PLOTTED 05/16/89
SURVEYED BY	L.NOYES		03/89 0219
SHEET 22 OF 29 SHEETS			

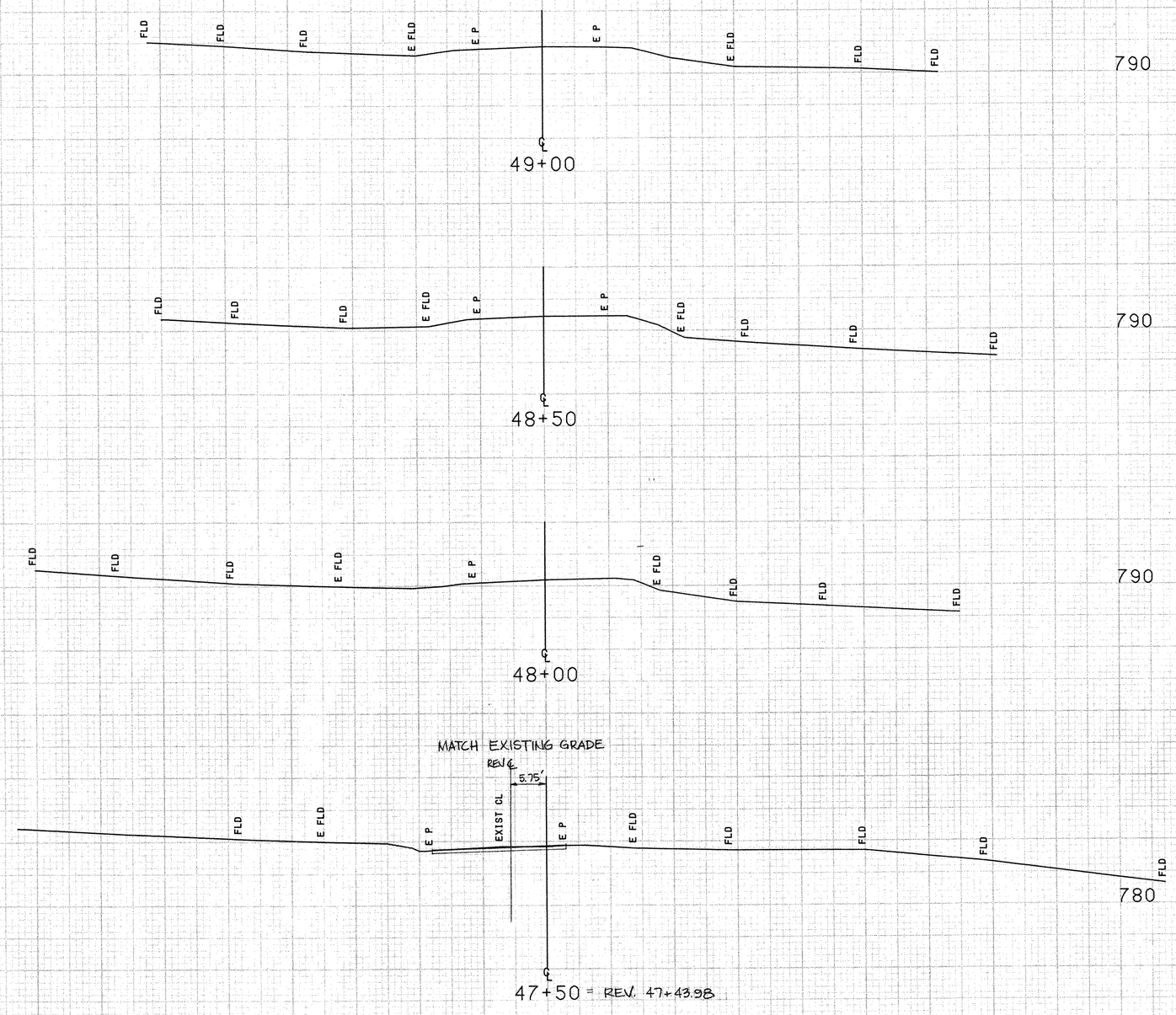

SCALE 10 FEET

FROM STA. 47+50		TO STA. 49+00	
PROJECT NAME	DERBY M1		
NO.	TH28910		PLOTTED 05/16/89
SURVEYED BY	L.NOYES	03/89	0219
SHEET 23 OF 29 SHEETS			

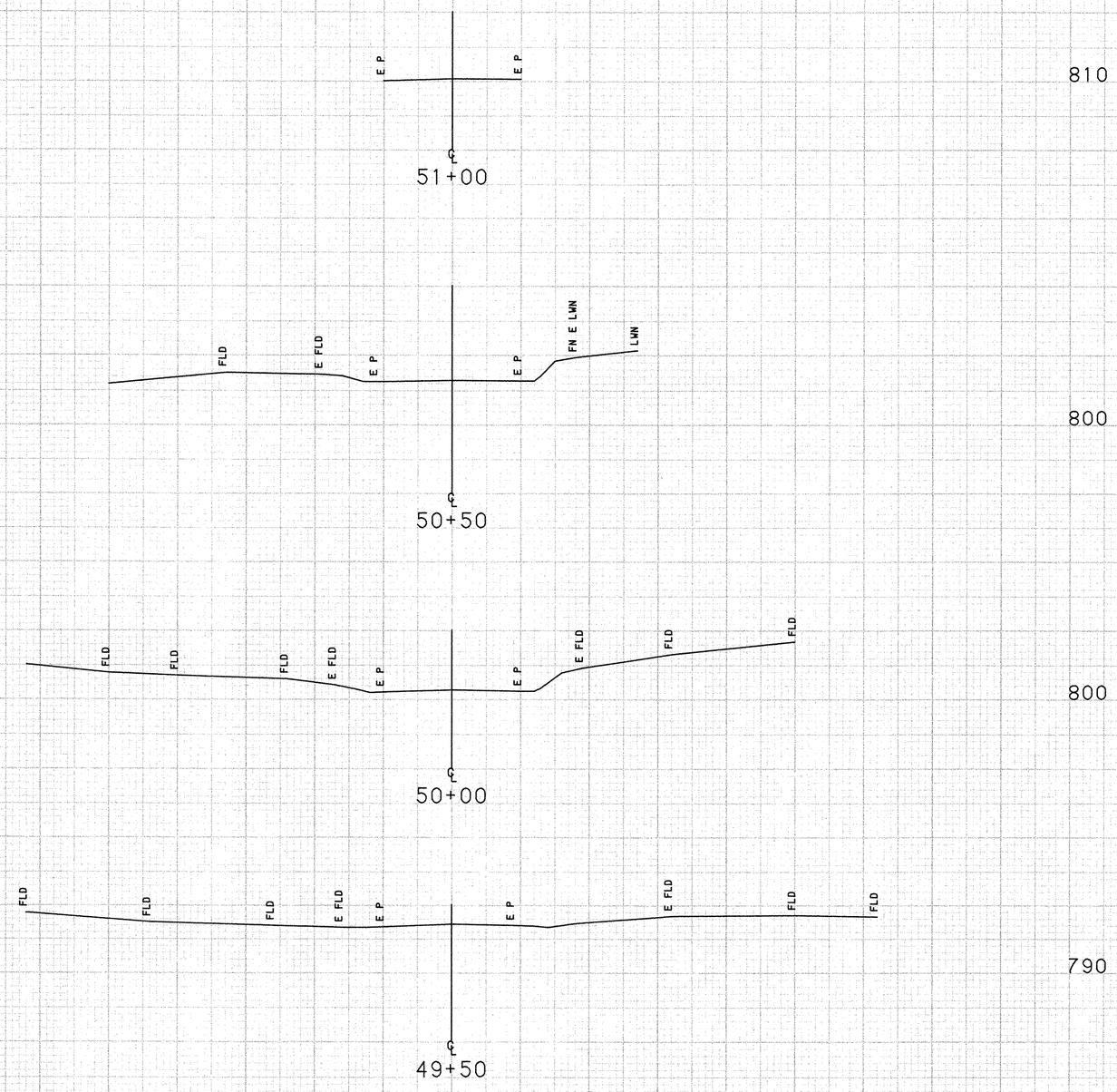

SCALE 10 FEET

FROM STA. 49+50		TO STA. 51+00	
PROJECT NAME	DERBY M1		
NO.	TH28910		PLOTTED 05/16/89
SURVEYED BY	L.NOYES	03/89	0219
SHEET 24 OF 29 SHEETS			

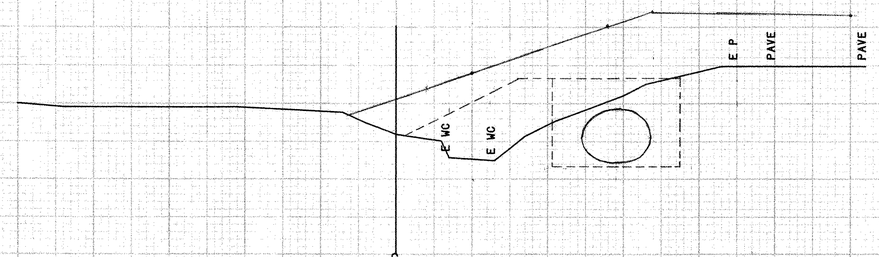

740

STA 499+21 BEGIN STRUCTURE EXCAVATION
BEGIN GRANULAR BORROW
BEGIN GRANULAR BACKFILL FOR STRUCTURES

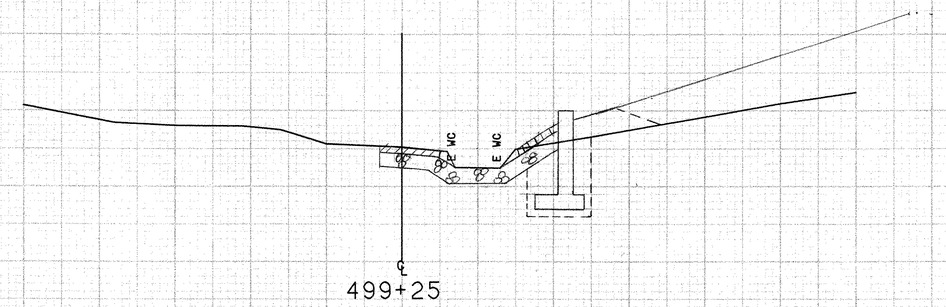

740

STA 499+14 BEGIN STONE FILL, TYPE II
BEGIN UNCLASSIFIED CHANNEL EXCAVATION
BEGIN GEOTEXTILE UNDER STONE FILL
BEGIN GRUBBING MATERIAL

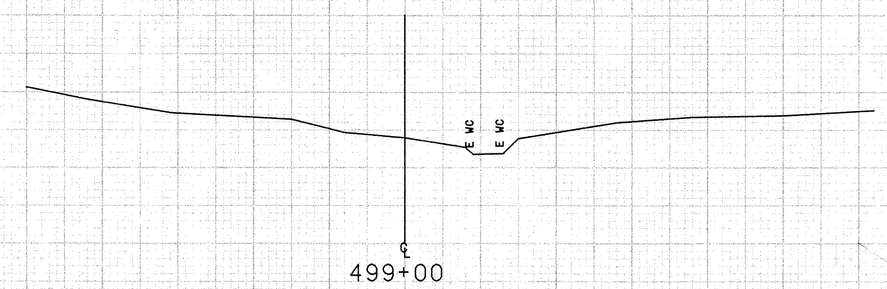

740

740

SCALE 10 FEET

FROM STA. 498+75	TO STA. 499+50
PROJECT NAME DERBY CHAN	
NO. TH28910	PLOTTED 05/16/89
SURVEYED BY L.NOYES	03/89 0219
SHEET 25 OF 29 SHEETS	

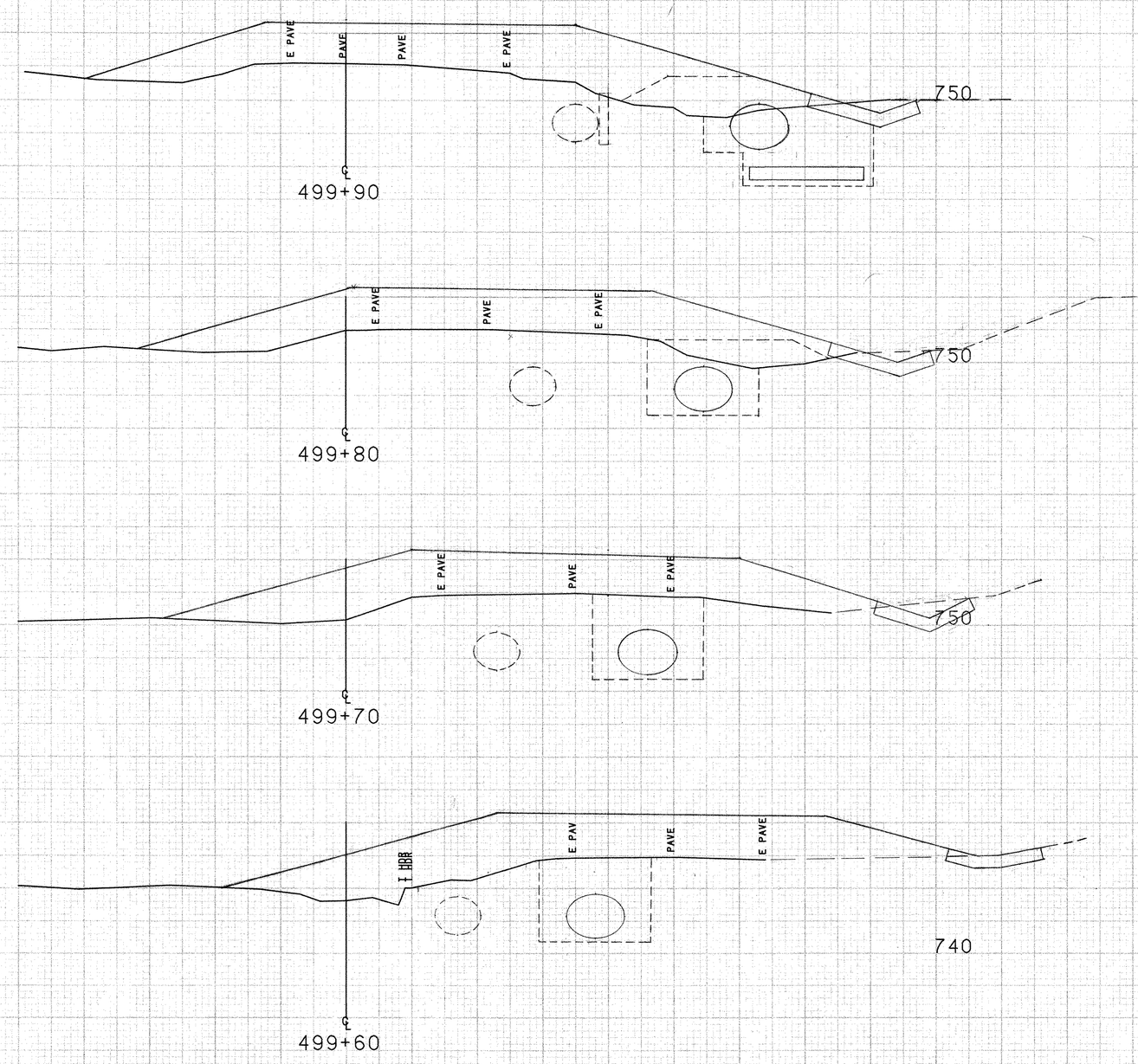

SCALE 10 FEET

FROM STA. 499+60		TO STA. 499+90	
PROJECT NAME	DERBY CHAN		
NO.	TH28910		PLOTTED 05/16/89
SURVEYED BY	L.NOYES	03/89	0219
SHEET 26 OF 29 SHEETS			

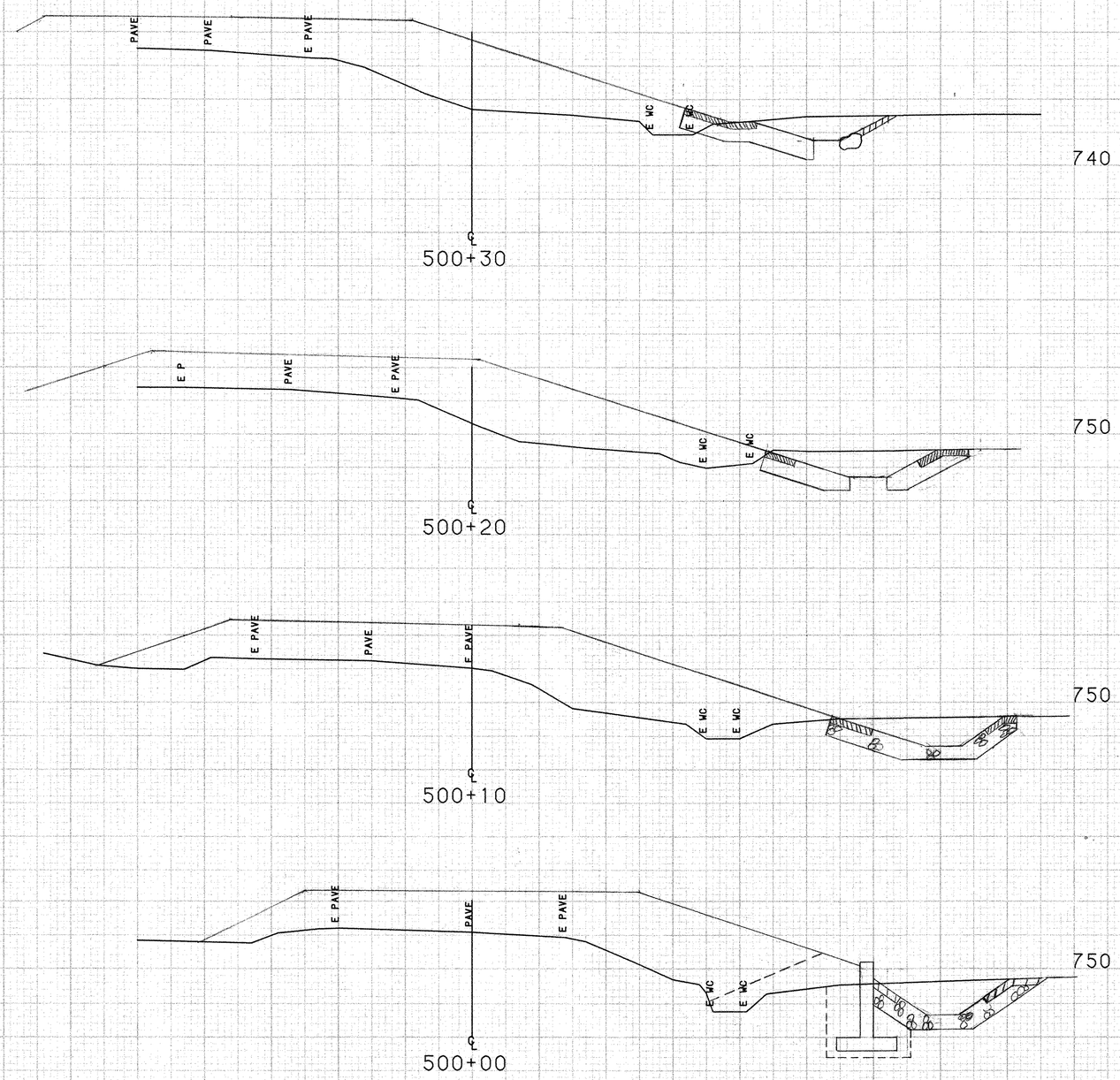

STA. 500+06 END STRUCTURE EXCAVATION
END GRANULAR BACKFILL FOR STRUCTURES
END GRANULAR BORROW

SCALE 10 FEET

FROM STA. 500+00		TO STA. 500+30	
PROJECT NAME	DERBY CHAN		
NO.	TH38910		PLOTTED 05/16/89
SURVEYED BY	L.NOYES	03/89	0219
SHEET 27 OF 29 SHEETS			

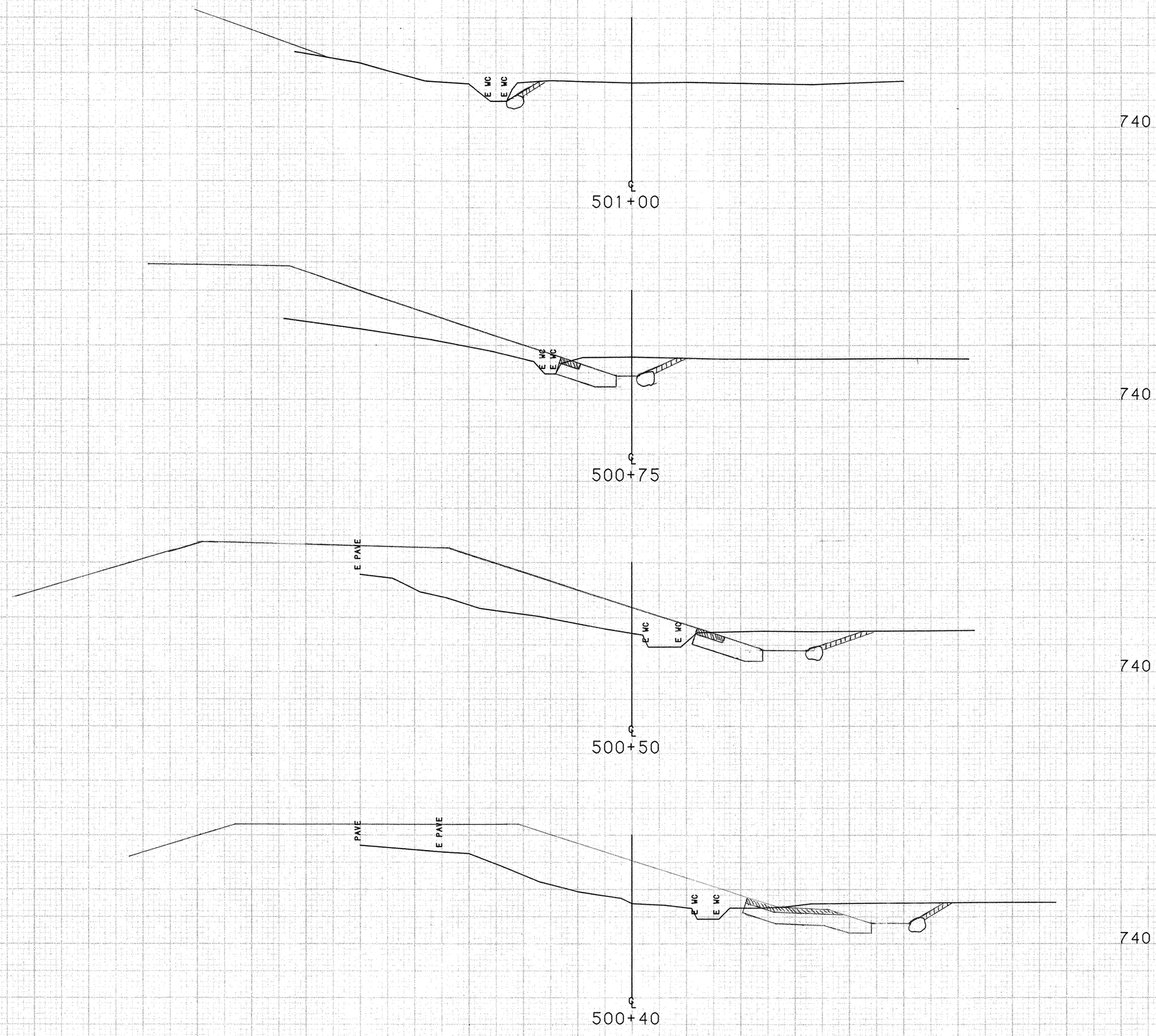

STA. 501+00
END UNCLASSIFIED CHANNEL EXCAV.
END STONE FILL, TYPE II
END RIPRAP, HEAVY TYPE
END GRUBBING MATERIAL

SCALE 10 FEET

FROM STA. 500+40		TO STA. 501+00	
PROJECT NAME	DERBY CHAN		
NO.	TH28910		PLOTTED 05/16/89
SURVEYED BY	L.NOYES	03/89 0219	
SHEET 28 OF 29 SHEETS			

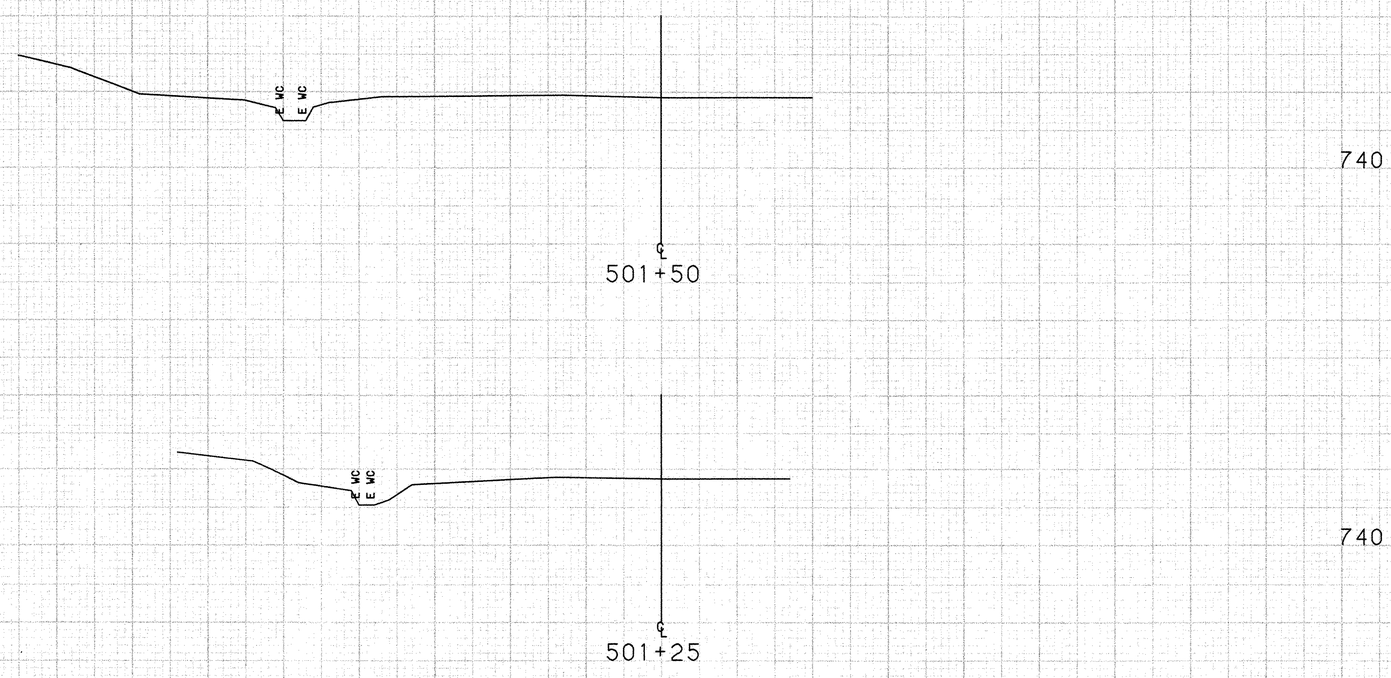

SCALE 10 FEET

FROM STA. 501+25		TO STA. 501+50	
PROJECT NAME	DERBY CHAN		
NO.	TH28910		PLOTTED 05/16/89
SURVEYED BY	L.NOYES	03/89 0219	
SHEET 29 OF 29 SHEETS			