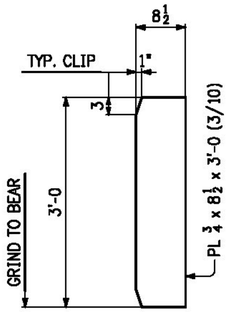

DET. OF PC. ~ x2a
(40 ~ REQ'D)
(@ ABUT. ℄ PIER - BRG. STIFF)

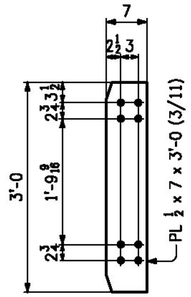

DET. OF PC. ~ x2b
(30 ~ REQ'D)
(CROSSFRAME CONN. PL. LOW)

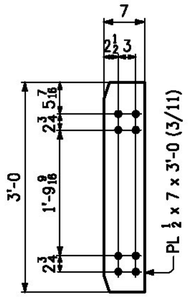

DET. OF PC. ~ x2c
(30 ~ REQ'D)
(CROSSFRAME CONN. PL. HIGH)

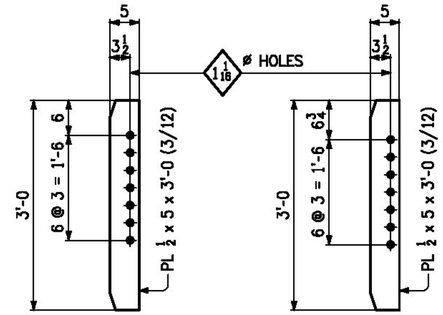

DET. OF PC. ~ x2d
(15 ~ REQ'D)
(DIAPHRAGM CONN. PL. LOW ~ LINE 4)

DET. OF PC. ~ x2f
(15 ~ REQ'D)
(DIAPHRAGM CONN. PL. HIGH ~ LINE 3)

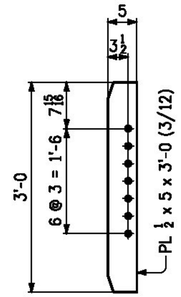

DET. OF PC. ~ x2g
(15 ~ REQ'D)
(DIAPHRAGM CONN. PL. HIGH ~ LINE 4)

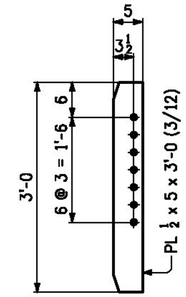

DET. OF PC. ~ x2w
(15 ~ REQ'D)
(DIAPHRAGM CONN. PL. LOW ~ LINE 5)

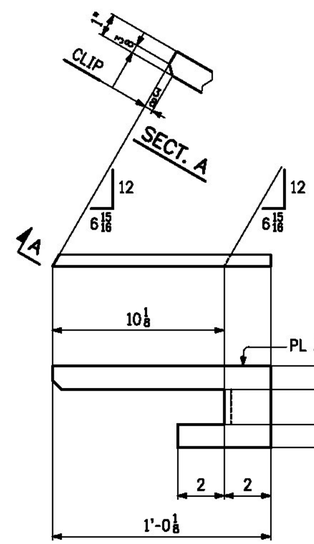

2 ~ DRIP BARS ~ x2n
(PIER 1 LINE 1)
(PIER 2 LINE 5)

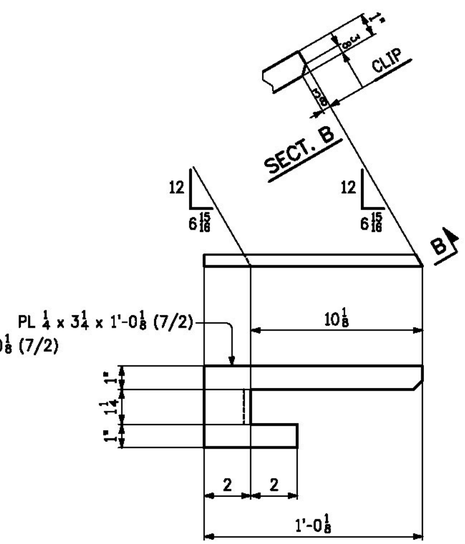

2 ~ DRIP BARS ~ x2p
(PIER 1 LINE 5)
(PIER 2 LINE 1)

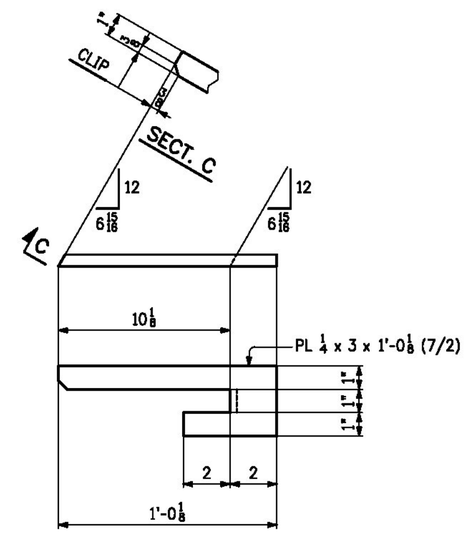

2 ~ DRIP BARS ~ x2t
(ABUT 1 LINE 1)
(ABUT 2 LINE 5)

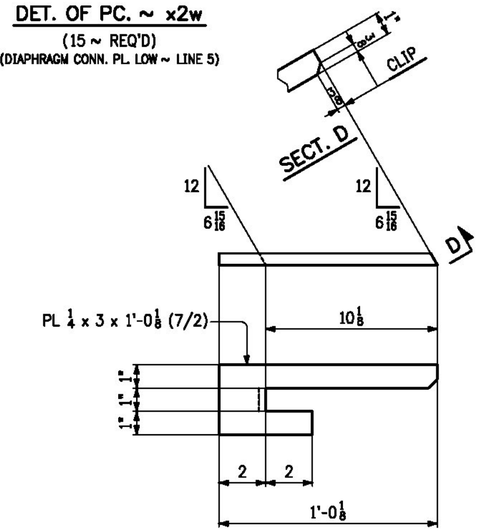

2 ~ DRIP BARS ~ x2v
(ABUT 1 LINE 5)
(ABUT 2 LINE 1)

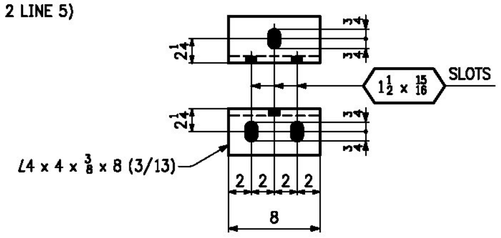

13 ~ SUPPORT ANGLES MK. x2k
(UTILITY SUPPORT GDR. LINE 3)

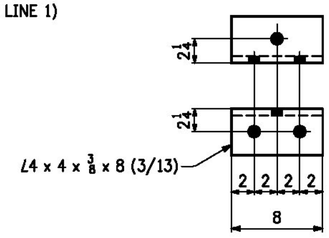

13 ~ SUPPORT ANGLES MK. x2m
(UTILITY SUPPORT GDR. LINE 2)

NOTES:

1. FOR GENERAL NOTES, SEE SHT. GN1.
2. MATERIAL TO BE M270-50W.

T.Y. LIN INTERNATIONAL

THE STAMPED DOCUMENTS ARE HEREBY:

_X_ APPROVED
____ APPROVED AS NOTED
____ REVISE AND RESUBMIT

SEE TRANSMITTAL FOR ADDITIONAL INFORMATION AS APPLICABLE.

THIS REVIEW IS FOR GENERAL CONFORMANCE WITH DESIGN CONCEPT ONLY. ANY DEVIATION FROM THE PLANS OR SPECIFICATIONS NOT CLEARLY NOTED BY THE CONTRACTOR HAS NOT BEEN REVIEWED. REVIEW BY THE ENGINEER SHALL NOT RELIEVE THE CONTRACTOR OF THE CONTRACTUAL RESPONSIBILITY FOR ANY ERRORS OR DEVIATION FROM THE CONTRACT REQUIREMENTS.

RICK HEBERT — REVIEWER
2/2/2015 — DATE

NO.	DATE	REMARKS	BY

REVISIONS

CASCO BAY STEEL STRUCTURES
ONE WALLACE AVENUE
SOUTH PORTLAND, ME 04106
PHONE: 207-780-6722
FAX: 207-780-6726

STRUCTURE: BENMONT AVE. (TH-7) (URBAN MINOR ARTERIAL)
LOCATION: TOWN OF BENNINGTON, VERMONT
PROJECT NO.: BRIDGE NO. 57 PROJECT NO. BRF 1000(16)
ENGINEER: STATE OF VERMONT AGENCY OF TRANSPORTATION
CUSTOMER: ALPINE CONSTRUCTION
ITEM: GIRDER STANDARDS
SURFACE PREP.: — OPEN HOLES: 15/16ø (UN)
PAINT: —

APPROVAL	DRAWN GDC 12-5-14	SHEET NO.	JOB NO.
SHOP	CHECKED PM 12-30-14	X2	605

1411-9 STD1-1411

Sheet X2 - Plotted: 01/08/2015 @ 08:36 (NEWHER)