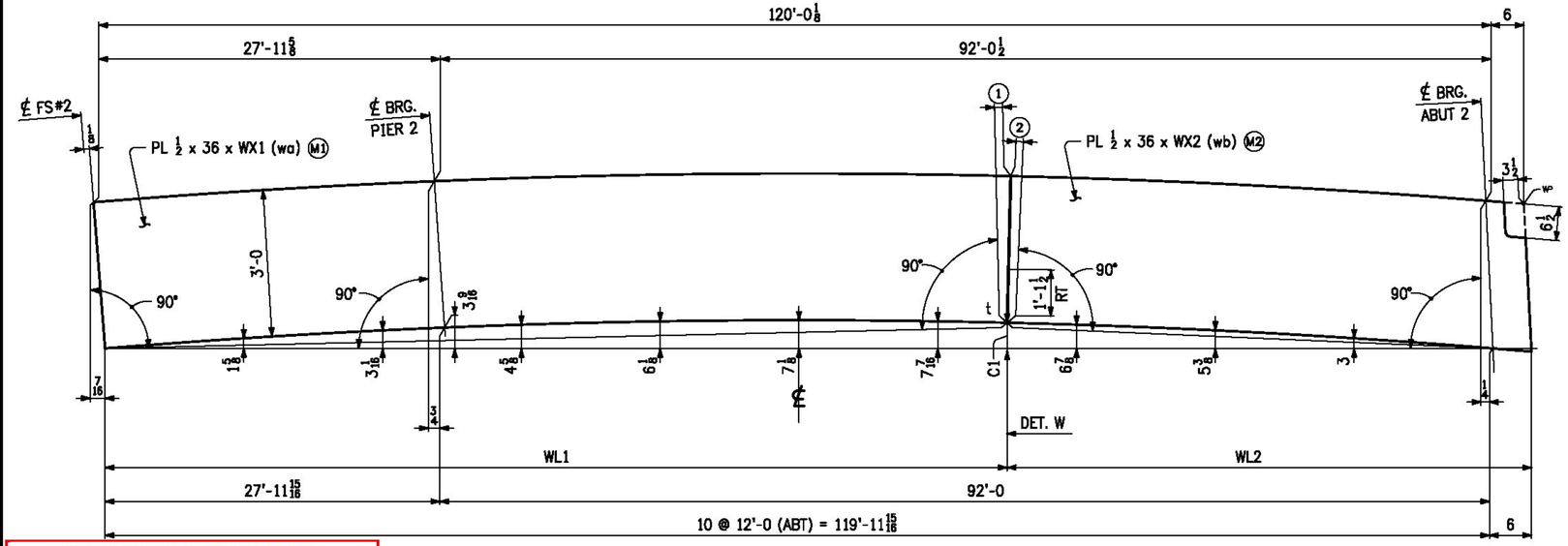

CAMBER DIAGRAM FOR 11G1C, 12G2C & 13G3C

MARK	WX1	WX2	WL1	WL2	C1	1	2	M1	M2
11G1C	73'-5 5/8	47'-1 3/8	73'-5 1/16	47'-0 7/8	7 7/16	3/8	7/16	1/23	1/26
12G2C	77'-6 11/16	43'-0 1/4	77'-6 1/8	42'-11 13/16	7 5/16	7/16	3/8	1/21	1/28
13G3C	74'-2 13/16	46'-4 1/8	74'-2 5/16	46'-3 5/8	7 7/16	3/8	7/16	1/22	1/27

NOTES:

1. MAT'L: M270-50WT2
2. FOR GENERAL NOTES SEE SHT. GN1.
3. "t" INDICATES WELDS SUBJECT TO TENSION.
4. "RT" DENOTES RADIOGRAPHIC INSPECTION. DIMENSION SHOWN IS 1/6 THE WEB DEPTH PLUS 25% OF THE REMAINDER.

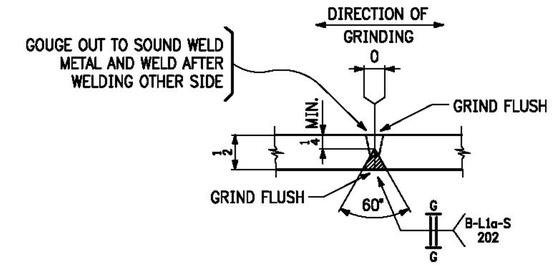

WEB SPLICE PLATE DET. "W"

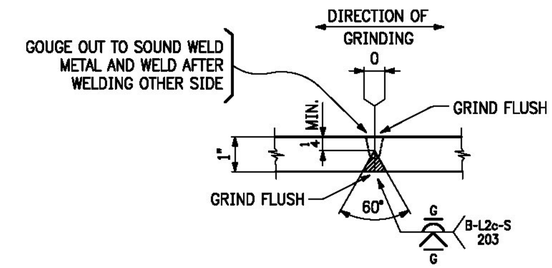

FLANGE PLATE SPLICE DETAIL "FA"

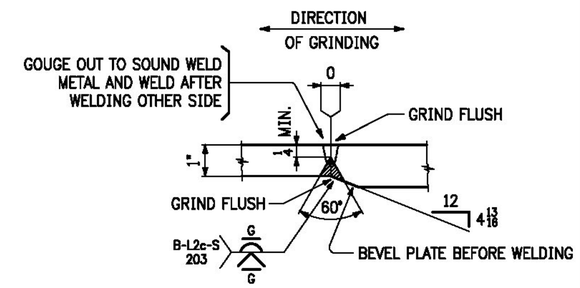

FLANGE PLATE SPLICE DETAIL "FB"

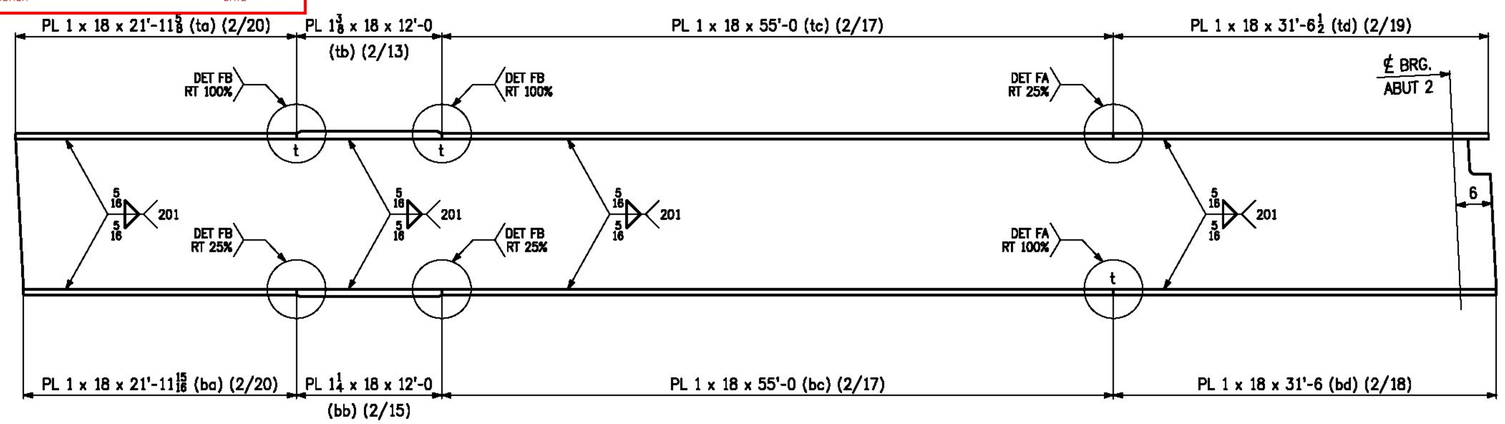

FLANGE DIAGRAM FOR 11G1C, 12G2C & 13G3C

T.Y. LIN INTERNATIONAL

THE STAMPED DOCUMENTS ARE HEREBY:

_X_ APPROVED
___ APPROVED AS NOTED
___ REVISE AND RESUBMIT

SEE TRANSMITTAL FOR ADDITIONAL INFORMATION AS APPLICABLE.

THIS REVIEW IS FOR GENERAL CONFORMANCE WITH DESIGN CONCEPT ONLY. ANY DEVIATION FROM THE PLANS OR SPECIFICATIONS NOT CLEARLY NOTED BY THE CONTRACTOR HAS NOT BEEN REVIEWED. REVIEW BY THE ENGINEER SHALL NOT RELIEVE THE CONTRACTOR OF THE CONTRACTUAL RESPONSIBILITY FOR ANY ERRORS OR DEVIATION FROM THE CONTRACT REQUIREMENTS.

RICK HEBERT — REVIEWER
2/2/2015 — DATE

NO.	DATE	REMARKS	BY

REVISIONS

CASCO BAY STEEL STRUCTURES
ONE WALLACE AVENUE
SOUTH PORTLAND, ME 04106
PHONE: 207-780-6722
FAX: 207-780-6726

STRUCTURE: BENMONT AVE. (TH-7) (URBAN MINOR ARTERIAL)
LOCATION: TOWN OF BENNINGTON, VERMONT
PROJECT NO.: BRIDGE NO. 57 PROJECT NO. BRF 1000(16)
ENGINEER: STATE OF VERMONT AGENCY OF TRANSPORTATION
CUSTOMER: ALPINE CONSTRUCTION
ITEM: WEB & FLANGE CUTTING DIAGRAMS
SURFACE PREP.: OPEN HOLES
PAINT:

APPROVAL	DRAWN DMM 12-5-14	SHEET NO.	JOB NO.
SHOP	CHECKED FM 1-2-15	C4	605

1411-4 WC-1411D

Sheet C4 - Plotted: 01/08/2015 @ 08:33 (HEATHER)