STA. 7+27.12
BEGIN BRIDGE

STA. 7+07.12
END APPROACH
BEGIN PROJECT
BRF 1000(B16)

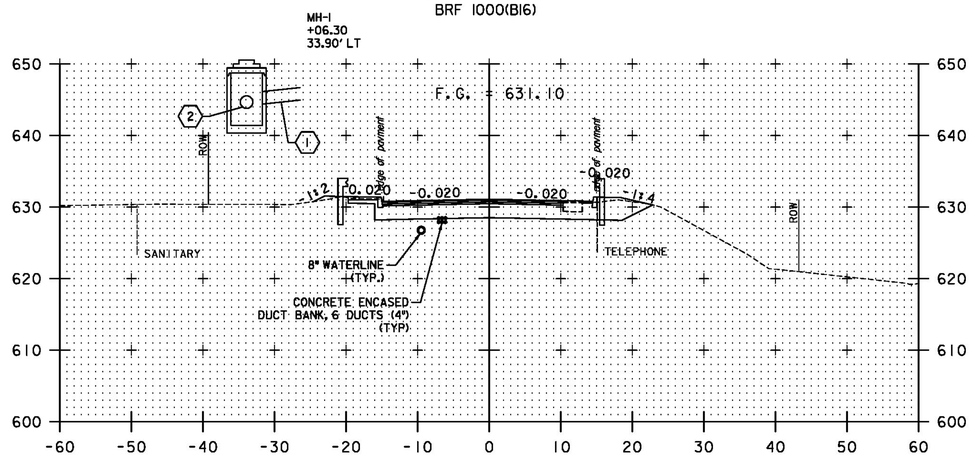

+81.19
23.46' LT
UTILITY POLE

7+00

DRIVE RIGHT

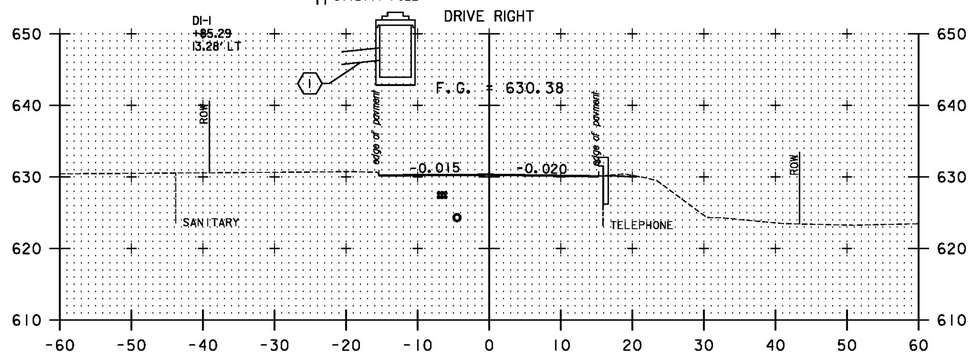

6+50

+07.03
50.15' RT
UTILITY POLE

BENMONT AVENUE
STA. 6+34.10
BEGIN APPROACH
MATCH EXISTING PAVEMENT

BENMONT AVENUE
STA.10+95.00
END APPROACH
MATCH EXISTING PAVEMENT

DRIVE RIGHT

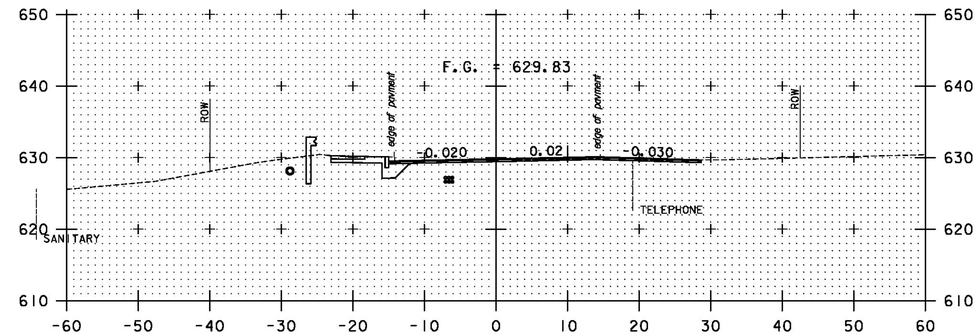

10+50

+20.34
Exist. Sanitary

+26.07
23.65' RT
UTILITY POLE

STA. 10+16.32
END PROJECT
BRF 1000(B16)
BEGIN APPROACH

SHOULDER CROSS SLOPE
STA. 10+00.00; -0.020
STA. 10+25.00; -0.020
STA. 10+50.00; +0.021

DI-3
+47.35
12.99' LT

+13.62
17.23' RT
TMH

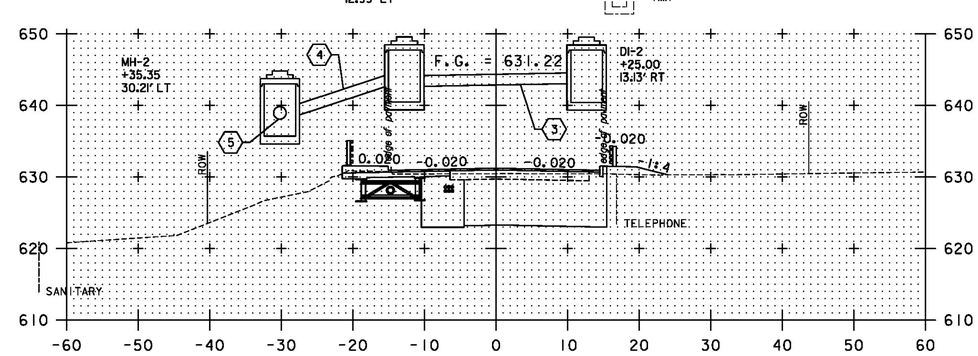

10+00

STA. 9+96.28
END BRIDGE

SCALE: 1"=10'-0"

PROJECT NAME: BENNINGTON	
PROJECT NUMBER: BRF 1000(16)	
FILE NAME: z88J087bdr_xsl.dgn	PLOT DATE: 8/7/2014
PROJECT LEADER: R. HEBERT	DRAWN BY: J. DAVIS
DESIGNED BY: J. DAVIS	CHECKED BY: D. BRYANT
BENMONT AVE. CROSS SECTIONS	SHEET 64 OF 75