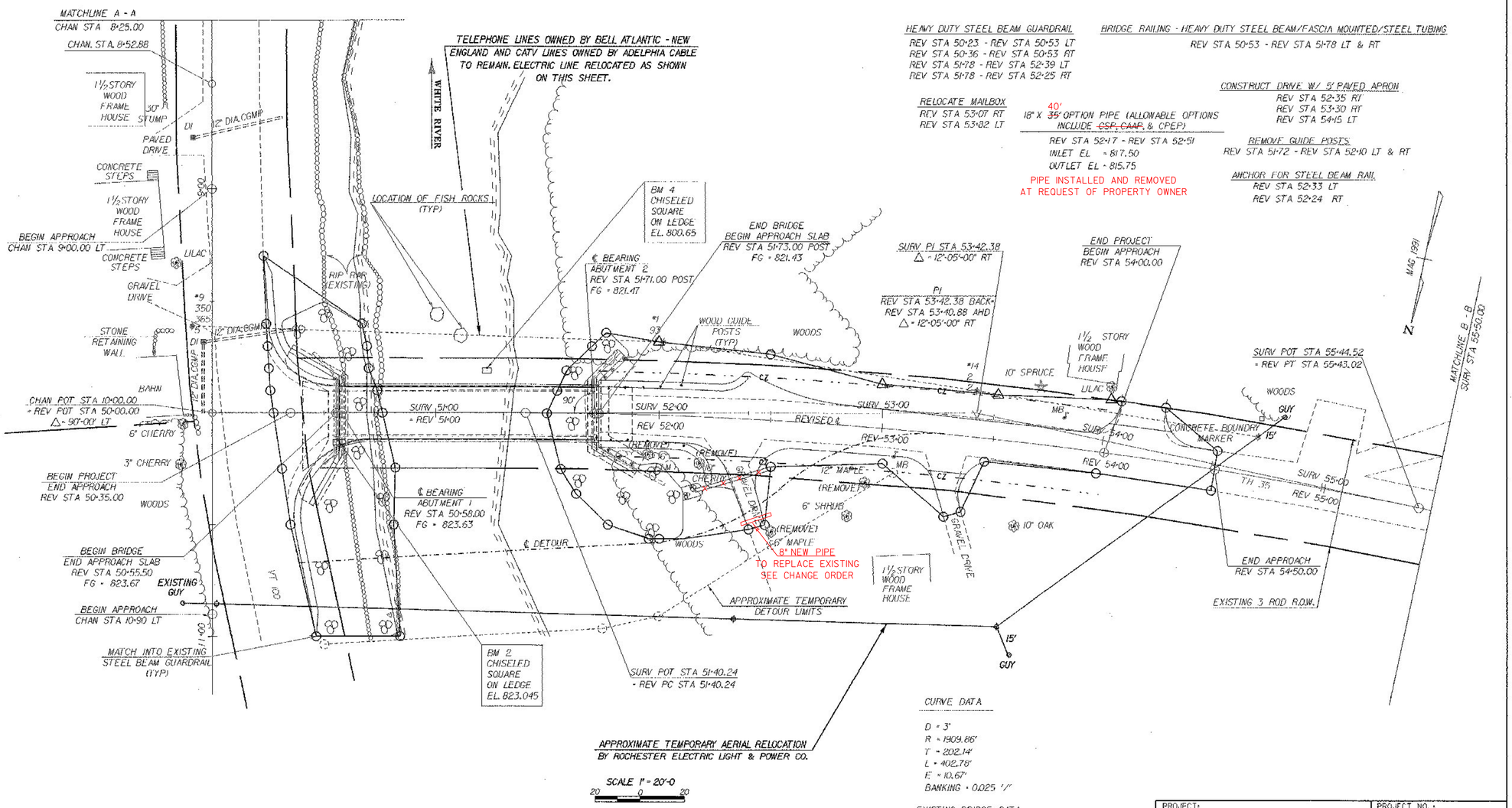

HEAVY DUTY STEEL BEAM GUARDRAIL
REV STA 50+23 - REV STA 50+53 LT
REV STA 50+36 - REV STA 50+53 RT
REV STA 51+78 - REV STA 52+39 LT
REV STA 51+78 - REV STA 52+25 RT

BRIDGE RAILING - HEAVY DUTY STEEL BEAM/FASCIA MOUNTED/STEEL TUBING
REV STA 50+53 - REV STA 51+78 LT & RT

RELOCATE MAILBOX
REV STA 53+07 RT
REV STA 53+82 LT

40'
18" X ~~35'~~ OPTION PIPE (ALLOWABLE OPTIONS INCLUDE ~~CSP, CAAP,~~ & CPEP)
REV STA 52+17 - REV STA 52+51
INLET EL = 817.50
OUTLET EL = 815.75
PIPE INSTALLED AND REMOVED AT REQUEST OF PROPERTY OWNER

CONSTRUCT DRIVE W/ 5' PAVED APRON
REV STA 52+35 RT
REV STA 53+30 RT
REV STA 54+15 LT

REMOVE GUIDE POSTS
REV STA 51+72 - REV STA 52+10 LT & RT

ANCHOR FOR STEEL BEAM RAIL
REV STA 52+33 LT
REV STA 52+24 RT

CURVE DATA
D = 3°
R = 1909.86'
T = 202.14'
L = 402.78'
E = 10.67'
BANKING = 0.025 '/'

EXISTING BRIDGE DATA:
SINGLE SPAN STEEL THRU TRUSS
20' CURB TO CURB WIDTH
21'-7" RAIL TO RAIL WIDTH
SPAN = 110'-7"

DATUM
VERTICAL NGVD 1929
HORIZONTAL N/A

PROJECT: ROCHESTER	PROJECT NO.: BRZ 1444 (20)
DESIGN FILE NAME: 87e048/Structures/se048bdr.dgn	
IPARM FILE NAME: se048ia2.1	PLOT DATE: 25-JAN-2002
SURVEYED BY: GILMAN	SURVEY DATE: 3/91
SQUAD LEADER: C.P. WILLIAMS	DRAWN BY: K. M. Higgins
LAYOUT	SHEET: 6 OF 52

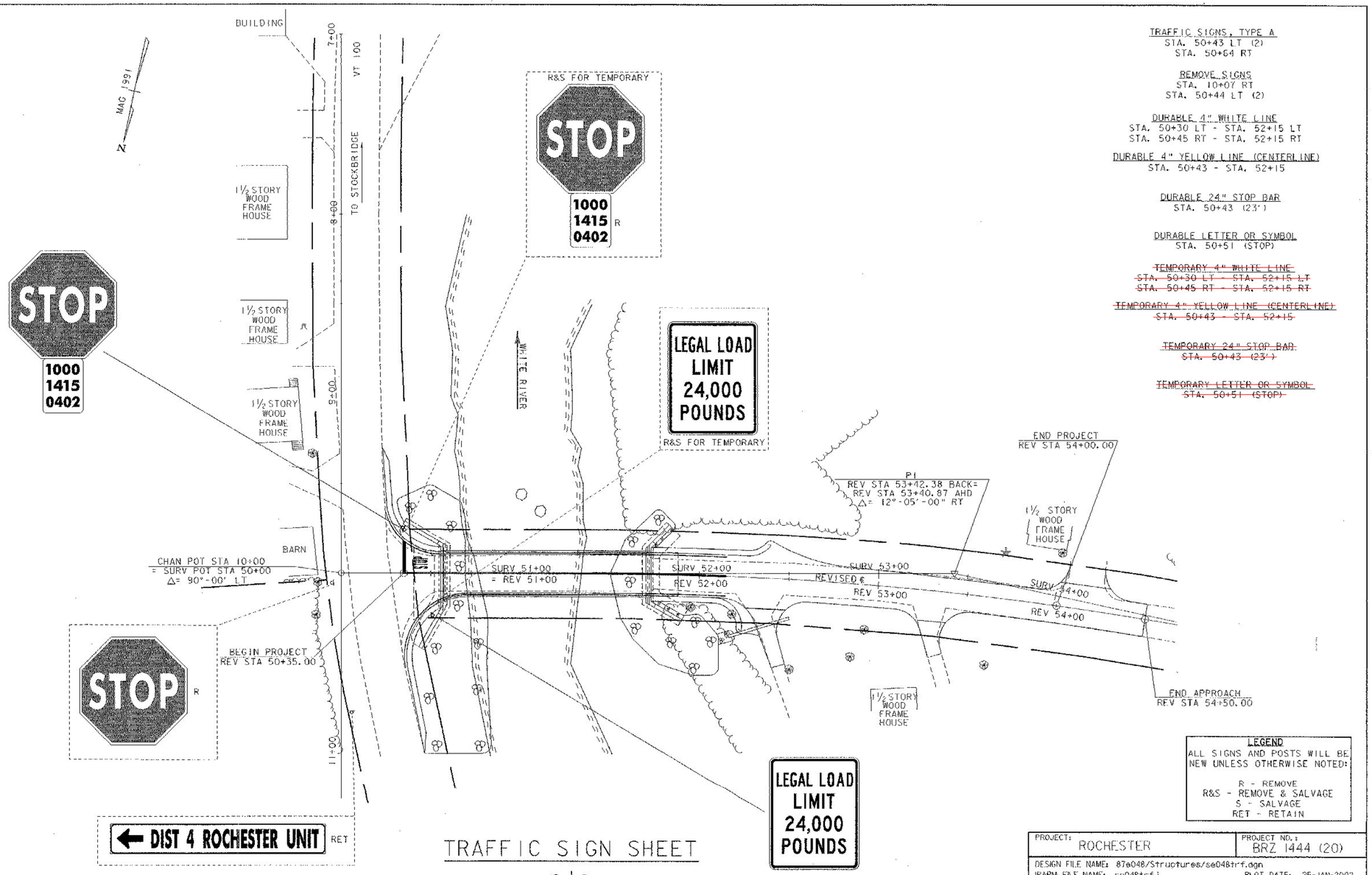

TRAFFIC SIGNS, TYPE A
STA. 50+43 LT (2)
STA. 50+64 RT

REMOVE SIGNS
STA. 10+07 RT
STA. 50+44 LT (2)

DURABLE 4" WHITE LINE
STA. 50+30 LT - STA. 52+15 LT
STA. 50+45 RT - STA. 52+15 RT

DURABLE 4" YELLOW LINE (CENTERLINE)
STA. 50+43 - STA. 52+15

DURABLE 24" STOP BAR
STA. 50+43 (23')

DURABLE LETTER OR SYMBOL
STA. 50+51 (STOP)

~~TEMPORARY 4" WHITE LINE~~
~~STA. 50+30 LT - STA. 52+15 LT~~
~~STA. 50+45 RT - STA. 52+15 RT~~

~~TEMPORARY 4" YELLOW LINE (CENTERLINE)~~
~~STA. 50+43 - STA. 52+15~~

~~TEMPORARY 24" STOP BAR~~
~~STA. 50+43 (23')~~

~~TEMPORARY LETTER OR SYMBOL~~
~~STA. 50+51 (STOP)~~

LEGEND
ALL SIGNS AND POSTS WILL BE NEW UNLESS OTHERWISE NOTED:

R - REMOVE
R&S - REMOVE & SALVAGE
S - SALVAGE
RET - RETAIN

TRAFFIC SIGN SHEET

nts

PROJECT: ROCHESTER	PROJECT NO.: BRZ 1444 (20)
DESIGN FILE NAME: 87a048/Structures/se048trf.dgn	
IPARM FILE NAME: se048trf.i	PLOT DATE: 25-JAN-2002
SURVEYED BY: GILMAN	SURVEY DATE: 3/91
SQUAD LEADER: C.P. WILLIAMS	DRAWN BY: P.G. JARVIS
TRAFFIC SIGN SHEET	SHEET: 11 OF 52

STATE OF VERMONT
AGENCY OF TRANSPORTATION

TRAFFIC SIGN SUMMARY SHEET

MILEMARKER, STATION, OR SIGN NUMBER	SIGN LEGEND	SIGN DIMENSIONS EA	WIDTH (in)	HEIGHT (in)	NEW & SALVAGED SIGNS "A"	"B"	SALV SIGN	SALV TIS	EXIST POST RETAIN	EXIST POST SALVAGE	NEW SIGN POSTS NO. OF POSTS	FLANGED CHANNEL lb/ft 1.12	2.0	3.0	SQUARE STEEL (in) lb/ft 1.75 1.88	2.0 2.16	2.5 3.35	ANCHOR	SLEEVE	TUBULAR ALUMINUM Ø (in) lb/ft 3.0 1.3	4.0 1.7	4.0 MOD. 1.7	TUBULAR STEEL Ø (in) FOUNDATION lb/ft 3.0 7.6	3.5 9.0	4.0 10.8	5.0 14.6	W-SHAPE STEEL FTG. SIZE 24"	30"	WEIGHT	POST SIZE	SIGN REMOVED	REMARKS	SIGN DETAIL DETAIL ON SHEET NUMBER	STD. SHEET NUMBER
																																	OPTION ITEMS			
50+43 LT	STOP	1	30	30	6.25 ~~5.2~~						1			X																		RI-1		E-143
	1000 1415 0402	1	6	8	0.33																											VD-700		E-138
50+64 RT	LEGAL LOAD LIMIT 24,000 POUNDS	1	24	30	5						1			X																		VR-017		E-141

FINAL POST LENGTHS ARE TO BE DETERMINED IN THE FIELD. POST SIZES ARE COMPUTED BASED ON INFORMATION FURNISHED ON THE STANDARD SHEETS AND THE TRAFFIC & SAFETY DIVISION'S "SIGN POST DESIGN GUIDELINE."

TOTALS	SF	SF	EA.	SF		FT FT FT 28	FT FT FT	EA	LB LB LB	LB LB LB LB	EA.	EA.	EA.	LB
	~~10.53~~ 11.58					28								

PROJECT: ROCHESTER	PROJECT NO.: BRZ 1444 (20)
DESIGN FILE NAME: 87e048/Structures/se048trf.dgn	
IPARM FILE NAME: se048tss.i	PLOT DATE: 25-JAN-2002
SURVEYED BY: GILMAN	SURVEY DATE: 3/9
SQUAD LEADER: C.P. WILLIAMS	DRAWN BY: P.G. JARVIS
TRAFFIC SIGN SUMMARY SHEET	SHEET: 12 OF 52

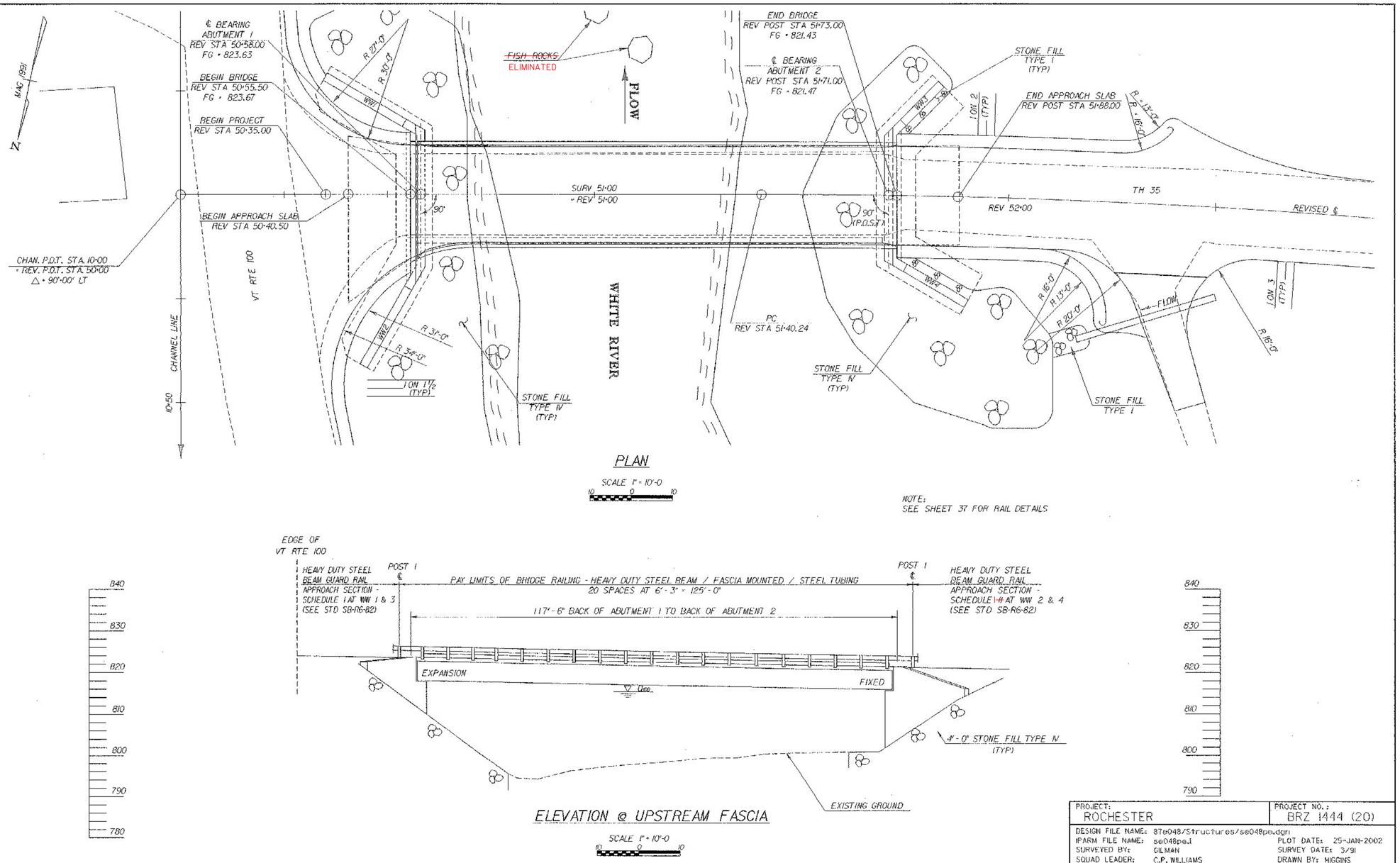

PLAN

SCALE 1" = 10'-0

NOTE:
SEE SHEET 37 FOR RAIL DETAILS

ELEVATION @ UPSTREAM FASCIA

SCALE 1" = 10'-0

PROJECT: ROCHESTER	PROJECT NO.: BRZ 1444 (20)
DESIGN FILE NAME: 87e048/Structures/se048pe.dgn	
IPARM FILE NAME: se048pe.i	PLOT DATE: 25-JAN-2002
SURVEYED BY: GILMAN	SURVEY DATE: 3/91
SQUAD LEADER: C.P. WILLIAMS	DRAWN BY: HIGGINS
PLAN AND ELEVATION	SHEET: 17 OF 52

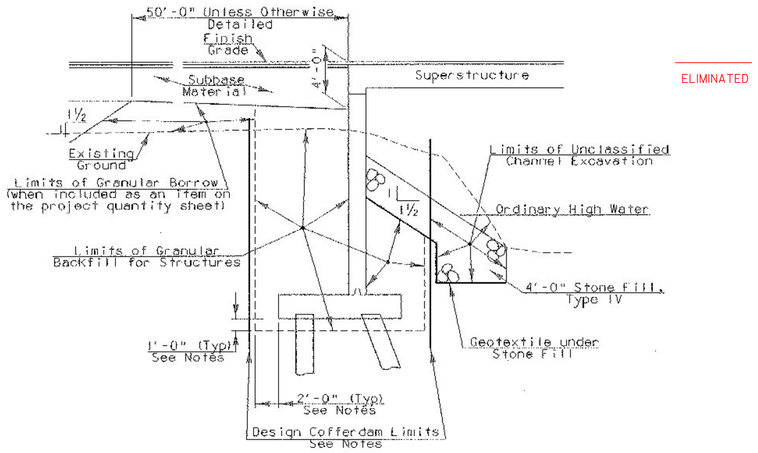

TYPICAL ABUTMENT SECTION

(NOT TO SCALE)

ELIMINATED

NOTES

1. ACTUAL COFFERDAM LIMITS TO BE DETERMINED BY THE CONTRACTOR.
2. THE DESIGN LIMITS OF COFFERDAM SHALL BE 2'-0" OUTSIDE THE PERIMETER OF SUBSTRUCTURE FOOTING. THE QUANTITY TO BE MEASURED FOR PAYMENT FOR EXCAVATION INSIDE THE COFFERDAM WILL BE MEASURED FROM THE DESIGN LIMITS OF COFFERDAM AS SHOWN IN THE CONTRACT PLANS.
3. ONE FOOT UNDERCUT AS DETERMINED NECESSARY BY THE RESIDENT ENGINEER.
4. IF A COFFERDAM IS CONSTRUCTED WHICH IS LARGER THAN THE DESIGN LIMITS OF COFFERDAM, PAYMENT FOR ALL UNCLASSIFIED CHANNEL EXCAVATION INCLUDING THAT PORTION WHICH IS INSIDE THE COFFERDAM BUT OUTSIDE THE DESIGN COFFERDAM LIMITS SHOWN WILL BE MADE AT THE CONTRACT UNIT PRICE FOR UNCLASSIFIED CHANNEL EXCAVATION.

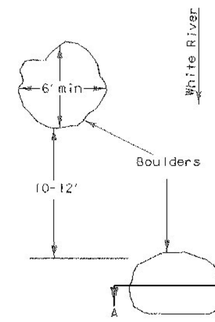

SECTION A-A

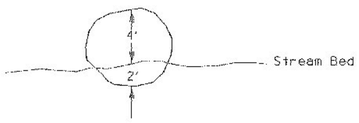

BOULDER CLUSTERS

SCALE: ¼" = 1'

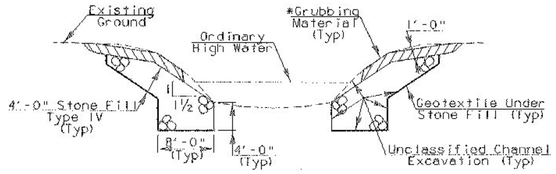

TYPICAL CHANNEL SECTION

(NOT TO SCALE)

* GRUBBING MATERIAL SHALL NOT BE PLACED ON THE STONE FILL IN THE AREA UNDER THE BRIDGE.

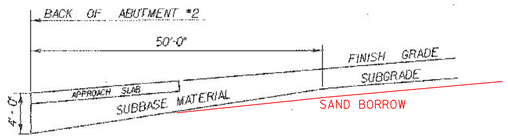

SUBBASE DETAIL AT ABUTMENT #2

NOT TO SCALE

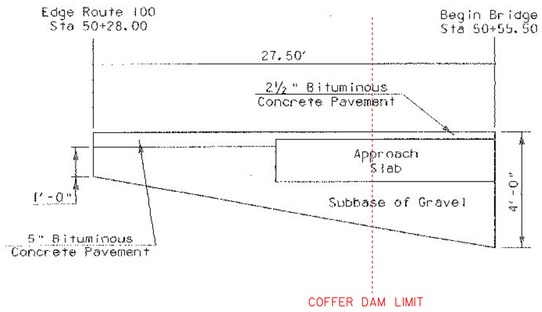

SUBBASE TAPER @ BEGIN PROJECT

nts

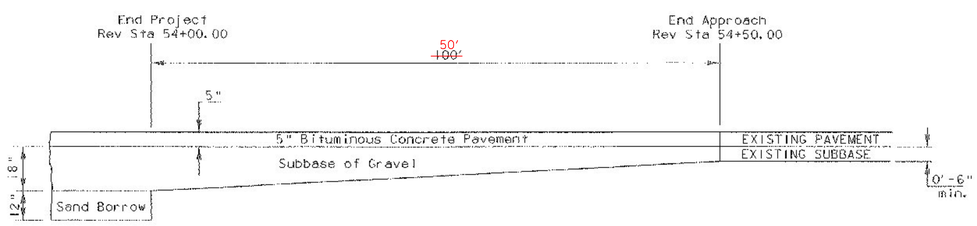

SUBBASE TAPER @ END PROJECT

nts

PROJECT NAME: ROCHESTER	
PROJECT NUMBER: BRZ 1444 (20)	
FILE NAME: 87e048/structures/se048mis.dgn	PLOT DATE: 25-JAN-2002
IPARM NAME: 87e048/structures/se048mis.i	DRAWN BY: P. G. JARVIS
PROJECT LEADER: C.P. WILLIAMS	CHECKED BY: P. ROWE
DESIGNED BY: K.M. HIGGINS	SHEET 20 OF 52
MISCELLANEOUS DETAILS	

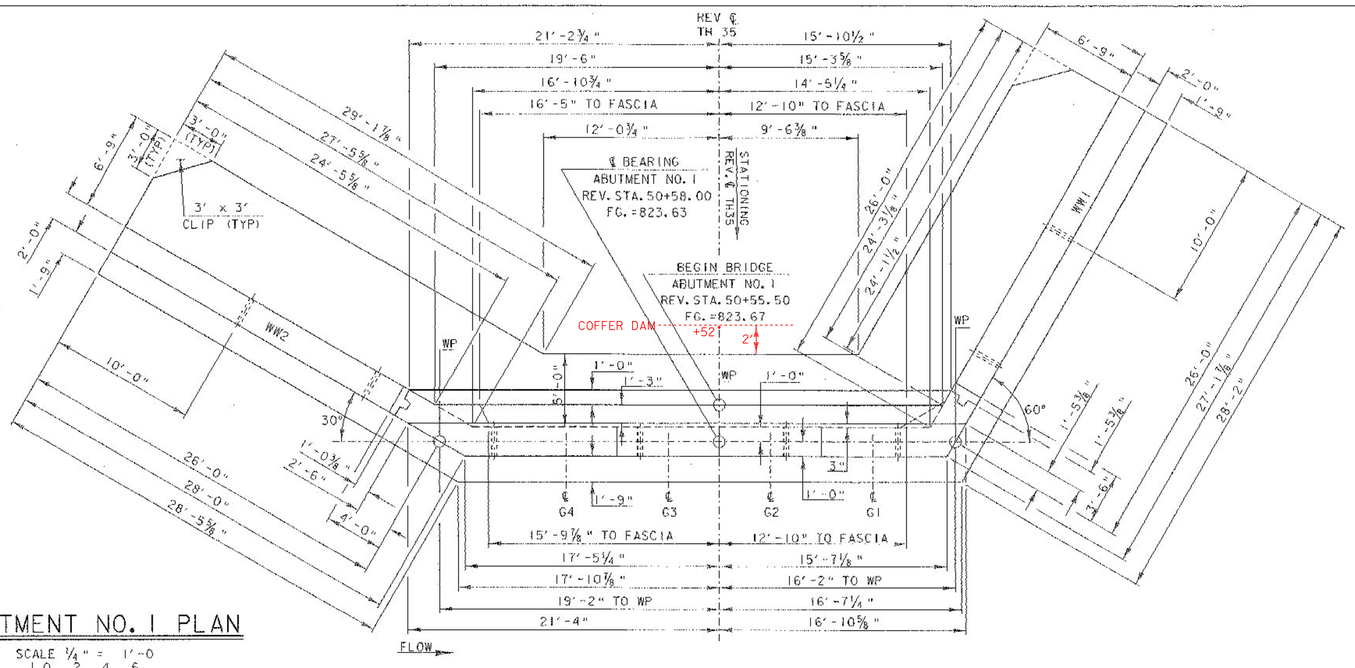

ABUTMENT NO. 1 PLAN

SCALE ¼" = 1'-0

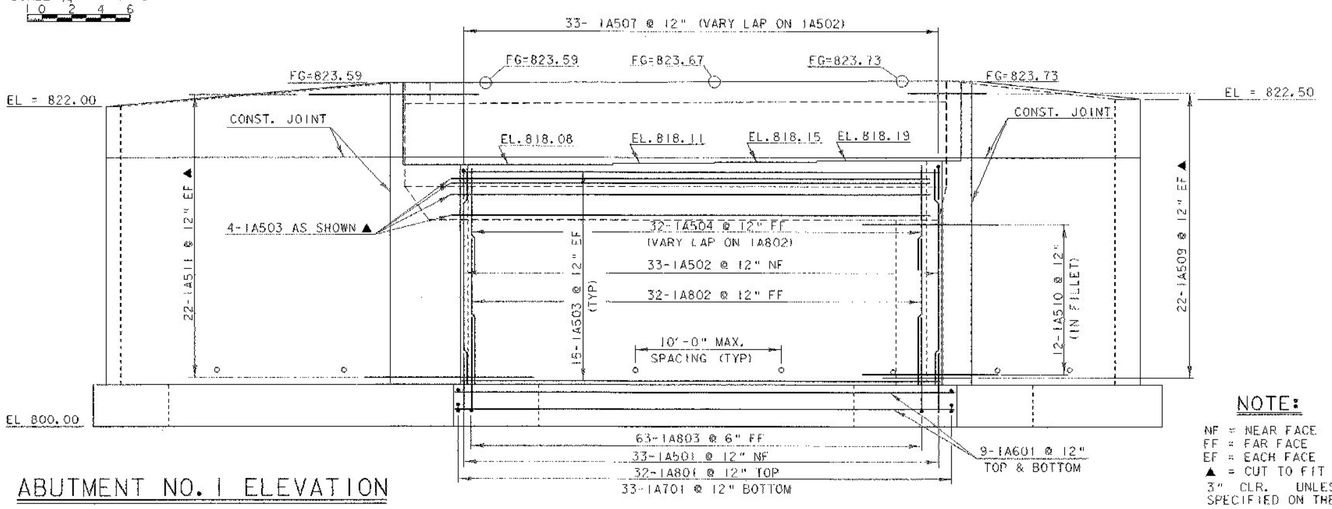

ABUTMENT NO. 1 ELEVATION

SCALE ¼" = 1'-0

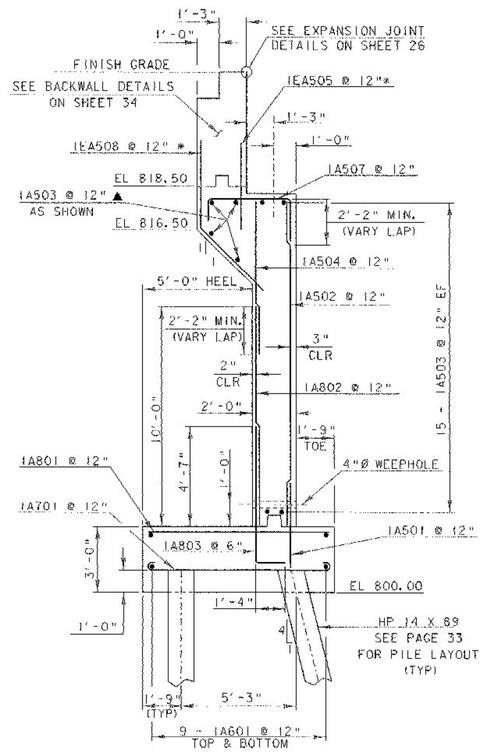

* SEE BACKWALL DETAILS ON SHEET 34 FOR LAYOUT OF REINFORCING STEEL

ABUTMENT NO. 1 TYPICAL SECTION

SCALE ⅜" = 1'-0

NOTE:

NF = NEAR FACE
FF = FAR FACE
EF = EACH FACE
▲ = CUT TO FIT IN FIELD
3" CLR. UNLESS OTHERWISE SPECIFIED ON THE PLANS.
ALL LAP SPLICES NOT DETAILED SHALL BE 2'-2"

PROJECT NAME:	ROCHESTER
PROJECT NUMBER:	BRZ 1444 (20)
FILE NAME: 87e048/structures/se048sub.dgn	PLOT DATE: 25-JAN-2002
IPARM NAME: 87e048/structures/se048abi.i	DRAWN BY: T.G. ANDERSON
PROJECT LEADER: C.P. WILLIAMS	CHECKED BY: K.M. HIGGINS
DESIGNED BY: K.M. HIGGINS	SHEET 30 OF 52
ABUTMENT NO. 1 DETAILS	

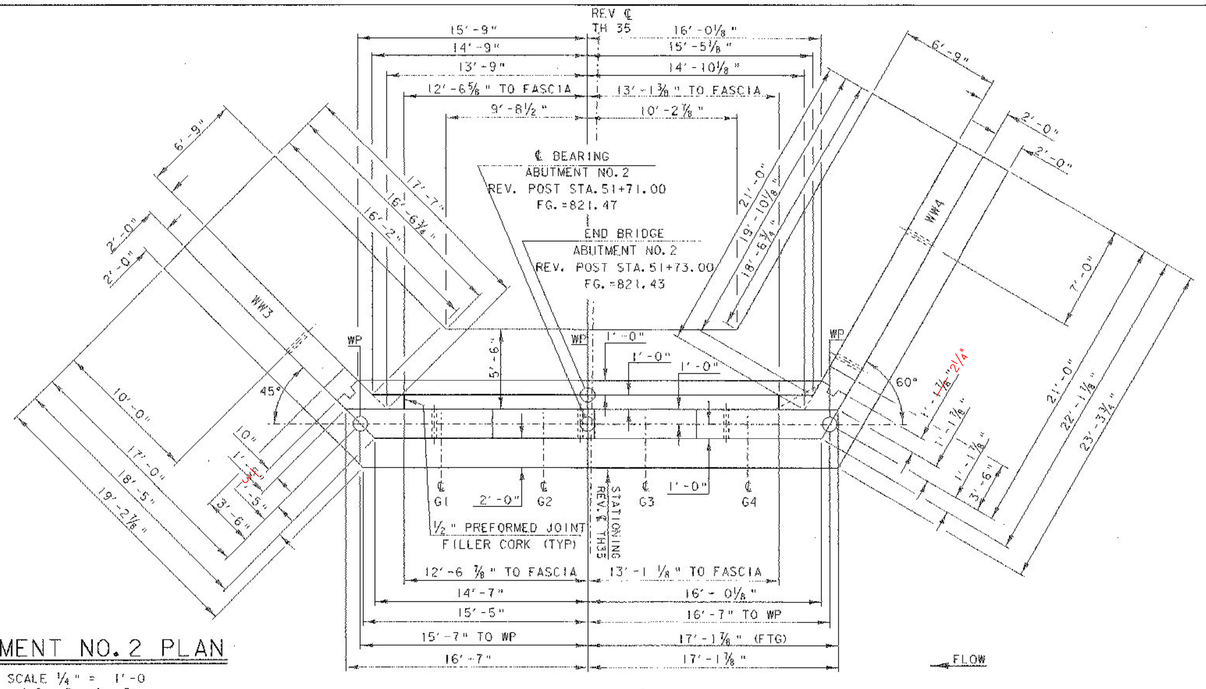

ABUTMENT NO. 2 PLAN

SCALE ¼" = 1'-0

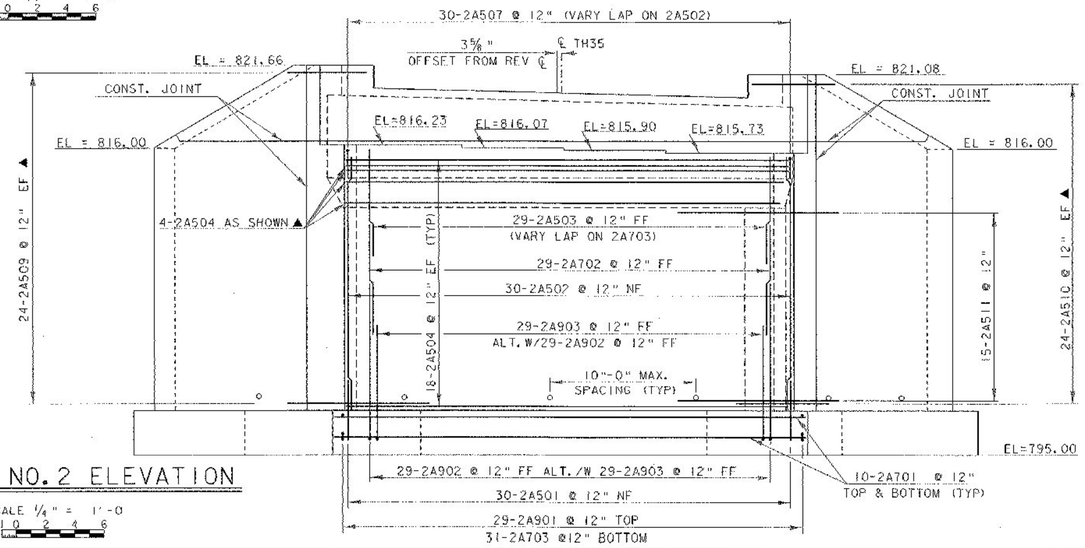

ABUTMENT NO. 2 ELEVATION

SCALE ¼" = 1'-0

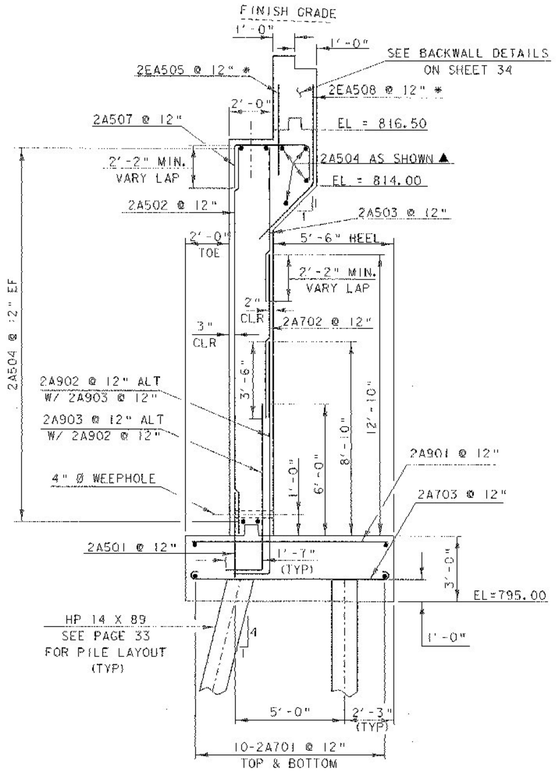

* SEE BACKWALL DETAILS ON SHEET 34
FOR LAYOUT OF REINFORCING STEEL

ABUTMENT NO. 2 TYPICAL SECTION

SCALE ⅜" = 1'-0

NOTE:

NF = NEAR FACE
FF = FAR FACE
EF = EACH FACE
▲ = CUT TO FIT IN FIELD
3" CLR. UNLESS OTHERWISE SPECIFIED ON THE PLANS.
ALL LAP SPLICES NOT DETAILED SHALL BE 2'-2"

PROJECT NAME: ROCHESTER
PROJECT NUMBER: BRZ 1444 (20)

FILE NAME: 87e048/structures/se048sub.dgn
!PARM NAME: 87e048/structures/se048ab2.!
PROJECT LEADER: C.P. WILLIAMS
DESIGNED BY: P. R. ROWE
PLOT DATE: 25-JAN-2002
DRAWN BY: T.G. ANDERSON
CHECKED BY: K.M. HIGGINS
SHEET 31 OF 52

ABUTMENT NO. 2 DETAILS

MATCH INTO EXISTING
STEEL BEAM GUARDRAIL
(TYP)

BRIDGE RAILING - HEAVY DUTY STEEL BEAM/FASCIA MOUNTED/STEEL TUBING
REV STA 50+53 - REV STA 51+78 LT & RT

HEAVY DUTY STEEL BEAM GUARDRAIL
REV STA 50+23 - REV STA 50+53 LT
REV STA 50+36 - REV STA 50+53 RT
REV STA 51+78 - REV STA 52+39 LT
REV STA 51+78 - REV STA 52+25 RT

ANCHOR FOR STEEL BEAM RAIL
REV STA 52+33 LT
REV STA 52+24 RT

MAG. 1991

N

R 30'-0"

SCHEDULE 1

℄ POST 1

FLOW

℄ POST 1

SCHEDULE 1

R 15'-0"

1'-10"

4'-5"

1'-6"

4'-9"

SURV 51+00
= REV 51+00

RADIUS = 1909.86'

TH 35

REVISED ℄

4'-3"

REV 52+00

2'-0"

PC

CHAN. P.O.T. STA. 10+00
- REV. P.O.T. STA. 50+00
△ = 90°-00' LT

VT RTE 100

2'-0"
ALONG FASCIA

SCHEDULE 1#

R 34'-0"

℄ POST 1

WHITE RIVER

PC
REV STA 51+40.24

SCHEDULE 1#

R 15'-0"

℄ POST 1

CHANNEL LINE

10+50

MATCH INTO EXISTING
STEEL BEAM GUARDRAIL
(TYP)

RAILING LAYOUT

SCALE 1" = 10'-0

10 0 10

PROJECT: ROCHESTER		PROJECT NO.: BRZ 1444 (20)	
DESIGN FILE NAME:	87e048/Structures/se048rail.dgn		
IPARM FILE NAME:	se048rail.I	PLOT DATE:	25-JAN-2002
SURVEYED BY:	GILMAN	SURVEY DATE:	3/91
SQUAD LEADER:	C.P. WILLIAMS	DRAWN BY:	P. ROWE
RAILING LAYOUT		SHEET:	37 OF 52

STATE OF VERMONT
AGENCY OF TRANSPORTATION
RIGHT OF WAY PLANS
DETAIL SHEET

TABLE OF PROJECT PROPERTY ACQUISITION

PARCEL NO.	GRANTOR	SHEET NO.	BEGINNING STATION	ENDING STATION	TAKING	REM.	RIGHTS	TITLE TAKEN	DATE	TOWN OR CITY RECORDED	BK.	PG.	REMARKS
1	SANTAGATA, JOSEPH R.	9	REV. 50+43 RT. REV. 50+46 RT. REV. 50+42 RT. REV. 50+60 RT.	REV. 50+57 RT. REV. 50+83 RT. REV. 50+84 RT. REV. 50+86 RT.			INSTALL & MAINT. (P) 120 S.F.± CHANNEL (P) 1780 S.F.± DETOUR (T) 1940 S.F.± CONST. (T) 180 S.F.±	WDOE	06-13-01	ROCHESTER	67	580-581	WING WALL & FOOTING 2-WAY VEHICULAR INCLUDES EROSION CONTROL
2	SLEATH, VIVIAN ANN & PRICE, LYNN GREGORY	9	REV. 51+27 RT. REV. 51+49 RT. REV. 51+56 RT. REV. 51+82 RT. REV. 51+91 RT. REV. 52+14 RT. REV. 52+35 RT. REV. 52+50 RT. REV. 53+14 RT. REV. 53+39 RT. REV. 52+05 RT. REV. 53+30 RT.	REV. 52+97 RT. REV. 53+04 RT. REV. 52+11 RT. REV. 51+91 RT. REV. 52+08 RT. REV. 52+35 RT. REV. 52+70 RT. REV. 53+31 RT. REV. 53+42 RT. REV. 52+37 RT.			DETOUR (T) 0.15A± INSTALL (T) 640 S.F.± CHANNEL (P) 1220 S.F.± INSTALL & MAINT. (P) 14 S.F.± REMOVE (T) CULVERT & DRAINAGE (P) DRIVE (T) ALL R.T. & I. INSTALL (T) INSTALL (T) SLOPE (T) 690 S.F.± DRIVE (T)	WDOE	02-01-02	ROCHESTER	69	9-11	2-WAY VEHICULAR EROSION CONTROL WING WALL & FOOTING OLD WING WALL & FOOTING 12' GRAVEL EXISTING LEACH FIELD ONLY EROSION CONTROL EROSION CONTROL 8' GRAVEL
3	DUVAL, TRUDY R.	9	REV. 51+57 LT. REV. 51+64 LT. REV. 51+76 LT. REV. 52+00 LT. REV. 51+77 LT. REV. 53+00 LT. REV. 54+15 LT. REV. 51+77 LT.	REV. 53+00 LT. REV. 51+86 LT. REV. 52+00 LT. REV. 52+73 LT. REV. 51+85 LT. REV. 54+00 LT. REV. 51+81 LT			CONST. (T) 650 S.F.± CHANNEL (P) 140 S.F.± SLOPE (P) 135 S.F.± SLOPE (T) 365 S.F.± INSTALL & MAINT. (P) 21 S.F.± INSTALL (T) DRIVE (T) REMOVE (T)	WDOE	08-18-01	ROCHESTER	68	177-178	INCLUDES EROSION CONTROL WING WALL & FOOTING EROSION CONTROL 20' GRAVEL OLD WING WALL & FOOTING
4	CURTIS, DAVID M. & CURTIS-ALEXANDER, WENDA M.	9	REV. 50+36 LT. REV. 50+36 LT. REV. 50+37 LT. REV. 50+38 LT. REV. 50+45 LT.	REV. 50+66 LT. REV. 50+66 LT. REV. 50+66 LT. REV. 50+47 LT. REV. 50+49 LT.			CONST. (T) 350 S.F.± SLOPE (P) 160 S.F.± CHANNEL (P) 570 S.F.± INSTALL & MAINT. (P) 20 S.F.± REMOVE (T)	WDOE	03-14-02	ROCHESTER	69	224-225	INCLUDES EROSION CONTROL WING WALL & FOOTING OLD WING WALL & FOOTING
5	ROCHESTER ELECTRIC LIGHT & POWER COMPANY												UTILITY
6	BELL ATLANTIC-NEW ENGLAND												UTILITY
7	ADELPHIA CABLE COMMUNICATIONS												UTILITY

REVISION NO.	SHEET	DESCRIPTION OF REVISION	DATE	MADE BY	APPROVED BY
1	8	PARCEL NO. 3 DUVAL. MOVE ' INCLUDES EROSION CONTROL' UP ONE SPACE. PER C.O. 9143.	08-29-00	S.L.D.	R.P.D.
		ELECTRONIC IPARMS TO STUCTURES	07-07-01	T.B.F.	R.P.D.

ACCT.MRyan
\\vaot_cadd\filingcabinet$\87e048\RightOfWay\re048d.dgn
DATE PLOTTED 07-MAY-2002

DR. (P)- DRAINAGE RIGHT
DIT. (P)- DITCHING RIGHT
CH. (P)- CHANNEL RT.
DRIVE (T)- DRIVE RIGHT
CUL. (P)- CULVERT RIGHT
[W]- WATER SOURCES

PRESENT R.O.W.
TAKING WITHOUT ACCESS
TAKING WITHOUT ACCESS ALONG PROPERTY LINE
TAKING WITH ACCESS
PERMANENT EASEMENT
TEMPORARY EASEMENT

LEGEND
C&T (P) CLEARING & TRIMMING
CZ (P) CLEAR ZONE
CONST.(T) CONSTRUCTION EASEMENT
SR SR SLOPE RIGHTS
P L PROPERTY LINE
TOP OF CUT
TOE OF SLOPE

APPROVED: ROGER P. DUMAS DATE: 03-09-00
AGENT D, PLANS & TITLES

R.O.W. PLANS
ROCHESTER
BRZ 1444(20)
8 9
SHEET 38 OF 52

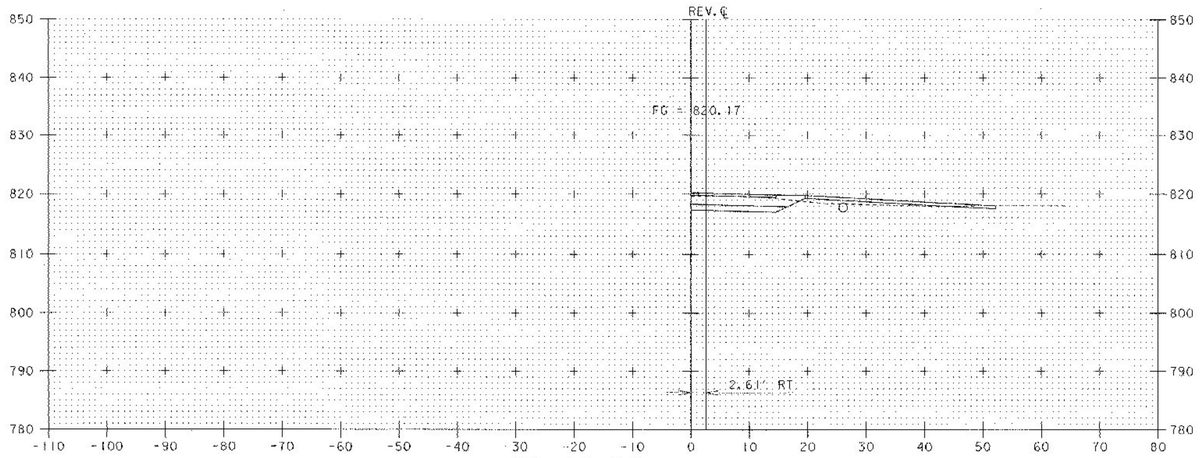

52+40.00
= REV STA 52+40.04

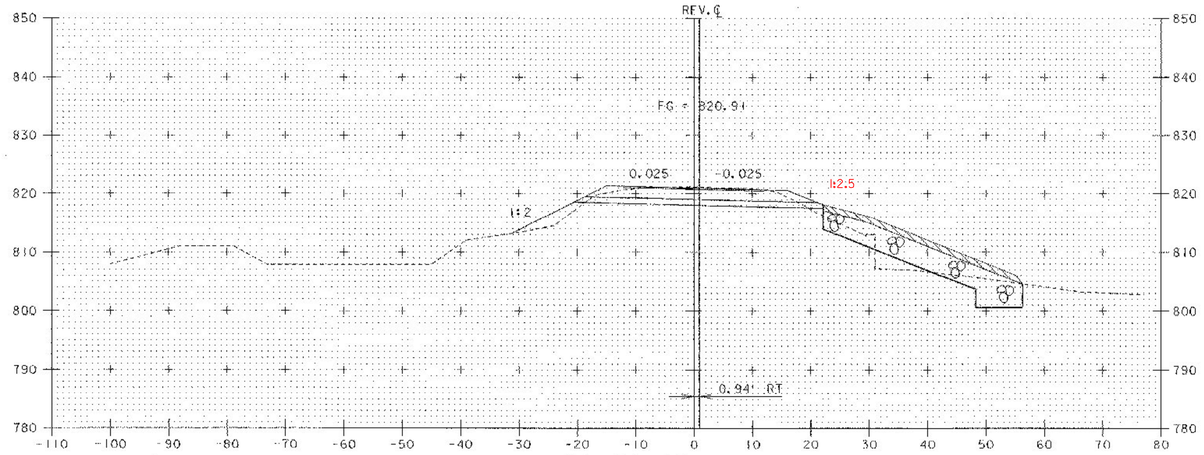

52+00.00
= REV STA 52+00.00

SCALE 1" = 10'-0
10 0 10

PROJECT: ROCHESTER	PROJECT NO. : BRZ 1444 (20)
DESIGN FILE NAME: 87e048/Structures/se048xs1.dgn	
IPARM FILE NAME: se048m14.1	PLOT DATE:25-JAN-2002
MAINLINE CROSS SECTIONS	
SECTION 52+00 THROUGH 52+40	SHEET: 44 OF 52