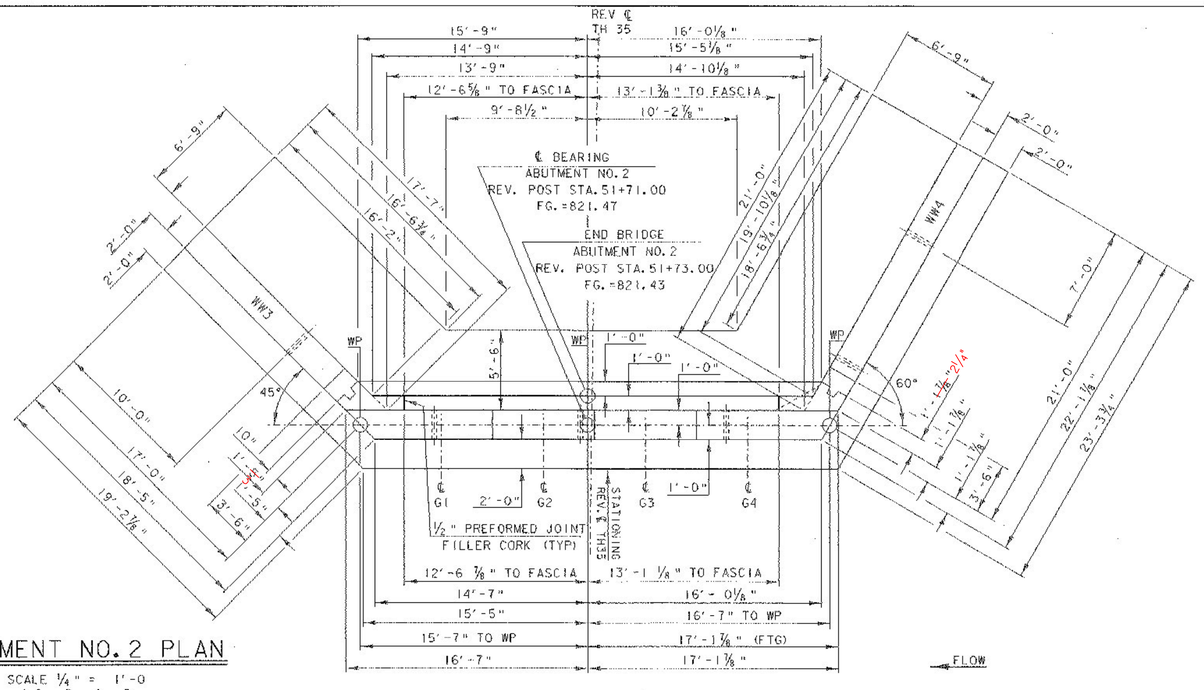

ABUTMENT NO. 2 PLAN

SCALE ¼" = 1'-0

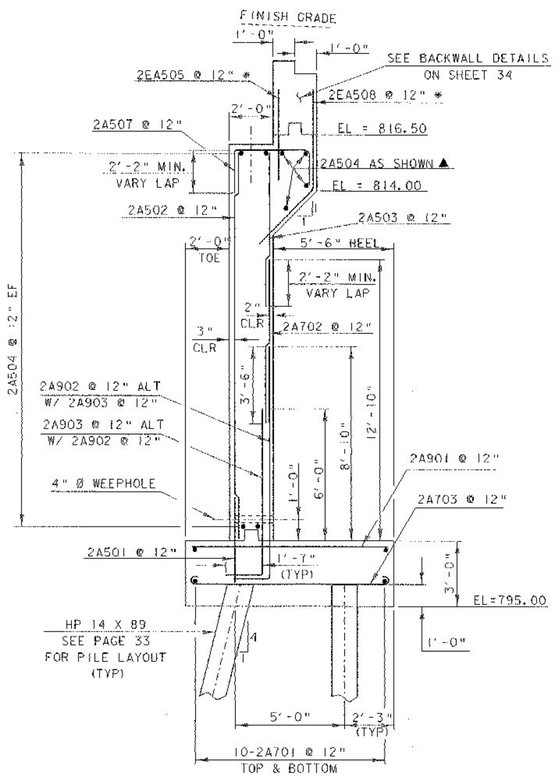

* SEE BACKWALL DETAILS ON SHEET 34 FOR LAYOUT OF REINFORCING STEEL

ABUTMENT NO. 2 TYPICAL SECTION

SCALE ⅜" = 1'-0

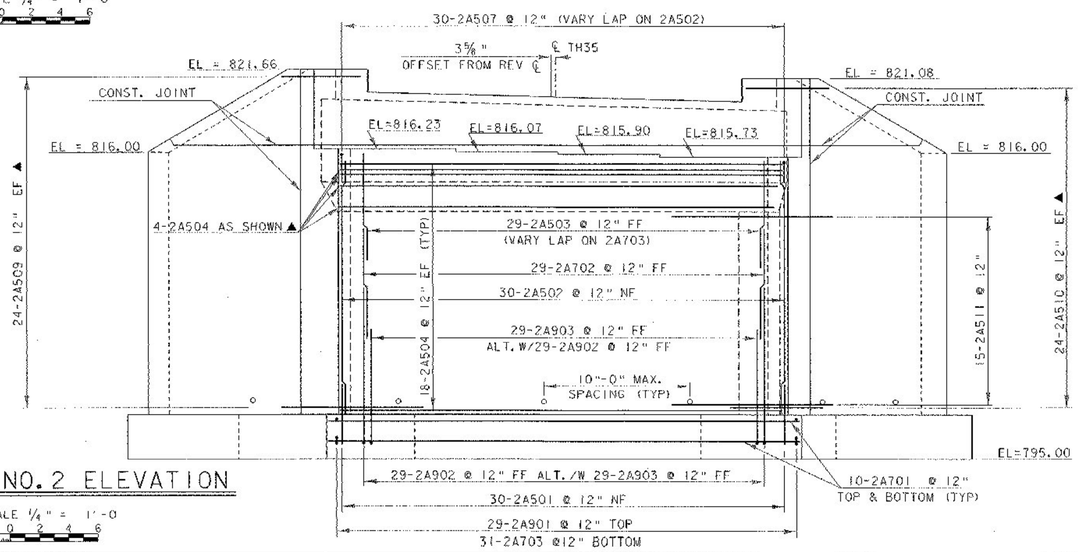

ABUTMENT NO. 2 ELEVATION

SCALE ¼" = 1'-0

NOTE:

NF = NEAR FACE
FF = FAR FACE
EF = EACH FACE
▲ = CUT TO FIT IN FIELD
3" CLR. UNLESS OTHERWISE SPECIFIED ON THE PLANS.
ALL LAP SPLICES NOT DETAILED SHALL BE 2'-2"

PROJECT NAME: ROCHESTER	
PROJECT NUMBER: BRZ 1444 (20)	
FILE NAME: 87e048/structures/se048sub.dgn	PLOT DATE: 25-JAN-2002
IPARM NAME: 87e048/structures/se048ab2.i	DRAWN BY: T.G. ANDERSON
PROJECT LEADER: C.P. WILLIAMS	CHECKED BY: K.M. HIGGINS
DESIGNED BY: P. R. ROWE	SHEET 31 OF 52
ABUTMENT NO. 2 DETAILS	