SEE SHEET 2 FOR INDEX OF SHEETS
AND LIST OF STANDARDS

RECORD PLANS	
CONTRACTOR	FW WHITCOMB CONSTRUCTION CORP – WALPOLE, NH
RESIDENT ENGINEER	DAN BREER
CONSTRUCTION BEGAN	JUNE 9, 2008
CONSTRUCTION COMPLETE	AUGUST 20, 2009
RECORD PLANS BY	DAN BREER & NICK GARBACIK

I HEREBY CERTIFY THAT ALL THE CONSTUCTION REQUIRED BY THIS SET OF DRAWINGS HAS BEEN ACCOMPLISHED AS INDICATED HEREIN

BY _____ RESIDENT ENGINEER

DATE 6/04/10

NOTE Any further information concerning final quantities, amounts or other details relative to this project may be found at Central Files in the electronic archives

STATE OF VERMONT
AGENCY OF TRANSPORTATION

PROPOSED IMPROVEMENT
BRIDGE PROJECT

TOWN OF POWNAL COUNTY OF BENNINGTON

ROUTE NO : TH 24, CL3 (LOCAL) BRIDGE NO : 41

PROJECT LOCATION : BEGINNING AT A POINT ON TH 24 APPROXIMATELY 627 FEET SOUTHWEST OF ITS INTERSECTION WITH VT 346 AND PROCEEDING 0.120 MILES ALONG TH 24 TOWARD THE INTERSECTION OF TH 24 AND VT 346.

PROJECT DESCRIPTION : THE PROJECT SHALL CONSIST OF CONSTRUCTION OF A NEW SUPERSTRUCTURE AND REHABILITATION OF THE SUBSTRUCTURE ALONG WITH RELATED ROADWAY APPROACH, CHANNEL WORK AND REMOVAL OF THE EXISTING TEMPORARY BRIDGE

LENGTH OF STRUCTURE :	234.25	FEET.
LENGTH OF ROADWAY :	392.75	FEET.
LENGTH OF PROJECT :	627.00	FEET.

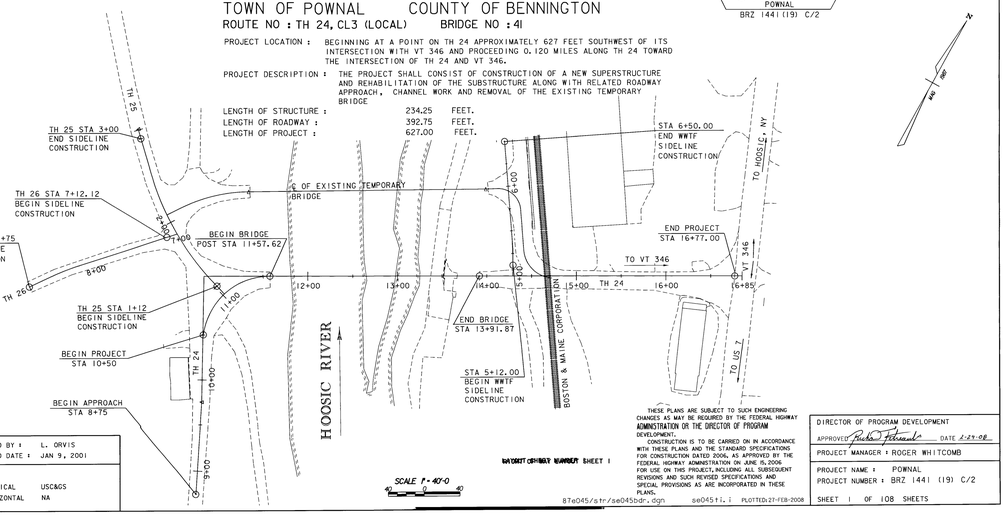

SCALE 1" = 40'-0"

CONVENTIONAL SYMBOLS

COUNTY LINE
TOWN LINE
LIMITS OF ACCESS
POINT OF ACCESS
FENCE LINE
STONE WALL
TRAVELED WAY
GUARD RAIL
RAILROAD
SURVEY LINE
CULVERT
POWER POLE
TELEPHONE POLE
TREES
CONTROL OF ACCESS
PROPERTY LINE
R.O.W. TAKING LINE
SLOPE RIGHTS
TOP OF CUT
TOE OF SLOPE

SURVEYED BY : L. ORVIS
SURVEYED DATE : JAN 9, 2001

DATUM
VERTICAL USC&GS
HORIZONTAL NA

BASKET CONTRACT NUMBER SHEET 1

THESE PLANS ARE SUBJECT TO SUCH ENGINEERING CHANGES AS MAY BE REQUIRED BY THE FEDERAL HIGHWAY ADMINISTRATION OR THE DIRECTOR OF PROGRAM DEVELOPMENT.

CONSTRUCTION IS TO BE CARRIED ON IN ACCORDANCE WITH THESE PLANS AND THE STANDARD SPECIFICATIONS FOR CONSTRUCTION DATED 2006, AS APPROVED BY THE FEDERAL HIGHWAY ADMINISTRATION ON JUNE 15, 2006 FOR USE ON THIS PROJECT, INCLUDING ALL SUBSEQUENT REVISIONS AND SUCH REVISED SPECIFICATIONS AND SPECIAL PROVISIONS AS ARE INCORPORATED IN THESE PLANS.

DIRECTOR OF PROGRAM DEVELOPMENT
APPROVED Robert Hofmann DATE 1-29-08

PROJECT MANAGER : ROGER WHITCOMB

PROJECT NAME : POWNAL
PROJECT NUMBER : BRZ 1441 (19) C/2

SHEET 1 OF 108 SHEETS

87e045/str/se045bdr.dgn se045ti.i PLOTTED:27-FEB-2008

STATE OF VERMONT
AGENCY OF TRANSPORTATION

PRELIMINARY INFORMATION SHEET

INDEX OF SHEETS

INDEX OF SHEETS

1. TITLE SHEET
2. PRELIMINARY INFORMATION SHEET
3. TYPICAL SHEET
4-7. QUANTITY SHEETS
8-11. ROW SHEETS
12. TIE SHEET
13. LAYOUT SHEET NUMBER 1
14. LAYOUT SHEET NUMBER 2
15. MAINLINE PROFILE
16. MAINLINE & SIDELINE WWTF PROFILES
17. TOWN HIGHWAY 25 AND 26 PROFILES
18A. DRAINAGE SHEET
18B. DRAINAGE DETAIL SHEET
19. SIGN LAYOUT SHEET #1
20. SIGN LAYOUT SHEET #2
21. SIGN SUMMARY SHEET #1
22. SIGN SUMMARY SHEET #2
23. BORING LAYOUT SHEET
24. BORING LOG SHEET #1
25. BORING LOG SHEET #2
26. PLAN AND ELEVATION SHEET
27. EROSION CONTROL NARRATIVE
28. EPSC EXISTING CONDITIONS SHEET #1
29. EPSC EXISTING CONDITIONS SHEET #2
30. EPSC CONSTRUCTION PHASE SHEET #1
31. EPSC CONSTRUCTION PHASE SHEET #2
32. EPSC FINAL CONDITIONS SHEET #1
33. EPSC FINAL CONDITIONS SHEET #2
34. EPSC DETAIL SHEET 1
35. EPSC DETAIL SHEET 2
36. EPSC DETAIL SHEET 3
37. PROJECT NOTE SHEET
38. DECK REINFORCING PLAN
39. FRAMING PLAN
40. SUPERSTRUCTURE DETAILS SHEET 1
41. SUPERSTRUCTURE DETAILS SHEET 2
42. SUPERSTRUCTURE DETAILS SHEET 3
43. BEARING DETAILS SHEET 1
44. BEARING DETAILS SHEET 2
45. BEARING DETAILS SHEET 3
46. APPROACH SLAB DETAILS
47. BRIDGE END DETAILS
48. EXPANSION JOINT DETAILS SHEET 1
49. EXPANSION JOINT DETAILS SHEET 2
50. DOWNSPOUT DETAILS
51. ABUTMENT NO. 1 PLAN & ELEVATION
52. ABUTMENT NO. 2 PLAN & ELEVATION
53. ABUTMENT NO. 1 & NO. 2 BACKWALL DETAILS
54. PIER REINFORCING DETAILS
55. WINGWALL NO. 1 & NO. 2 DETAILS
56. WINGWALL NO. 3 & NO. 4 DETAILS
56A. WINGWALL NO. 2 & NO.4 CORNER DETAILS
57. PILE LAYOUT AND FOOTING REINFORCING PLAN
58. HEADWALL DETAILS
59. ALUMINUM RAILING DETAILS (SHEET 1)
60. ALUMINUM RAILING DETAILS (SHEET 2)
61. ALUMINUM RAILING DETAILS (SHEET 3)
62. ALUMINUM RAILING DETAILS (SHEET 4)
63. ALUMINUM RAILING DETAILS (SHEET 5)
64. ALUMINUM RAILING DETAILS (SHEET 6)
65. ALUMINUM RAILING DETAILS (SHEET 7)
66. REINFORCING STEEL SCHEDULE
67-75. MAINLINE CROSS SECTIONS
76-78. TOWN HIGHWAY 25 CROSS SECTIONS
79-82. TOWN HIGHWAY 26 CROSS SECTIONS
83. WWTF CROSS SECTIONS
84-90. CHANNEL SECTIONS
90A. EXISTING WATER AND SEWER
91-108. REFERENCE SHEETS

LIST OF STANDARDS

B-5	EMBANKMENT ON EARTH SLOPE	06/01/1994
	EMBANKMENT ON ROCK SLOPE	
	MUCK EXCAVATION	
	TYPICAL SLOPE ROUNDING	
B-71	STANDARDS FOR RESIDENTIAL AND COMMERCIAL DRIVES	07/08/2005
C-1	GRANITE SLOPE EDGING	01/03/2000
	VERTICAL GRANITE CURB	
	PRECAST REINFORCED CONCRETE CURB	
	CAST IN PLACE CONCRETE CURB	
C-2A	PORTLAND CEMENT CONCRETE SIDEWALK	10/14/2005
	DRIVE ENTRANCES WITH PRECAST REINFORCED CONCRETE CURB OR CAST IN PLACE CONCRETE CURB	
C-3A	SIDEWALK RAMPS	09/01/2004
C-3B	SIDEWALK RAMPS AND MEDIAN ISLANDS	09/01/2004
D-6	REINFORCED CONCRETE DROP INLET WITH GRATE FOR USE IN DITCHES	06/01/1994
D-8	REINFORCED CONCRETE DROP INLET WITH PRECAST COVER	01/03/2000
	REINFORCED CONCRETE DROP INLET WITH GRATE (BOTTOM SECTION)	
D-9	REINFORCED CONCRETE DROP INLET WITH VERTICAL CURB	06/01/1994
	REINFORCED CONCRETE DROP INLET THROAT ADAPTER	
D-15	PRECAST REINFORCED CONCRETE CATCH BASIN W/ CAST IRON GRATE	06/01/1994
	PRECAST REINFORCED CONCRETE MANHOLE W/ CAST IRON COVER	
	CAST IRON GRATE WITH FRAME, TYPE D	
	CAST IRON GRATE WITH FRAME, TYPE E	
D-16	PRECAST REINFORCED CONCRETE CURB DROP INLET WITH CAST IRON GRATE	06/01/1994
	CAST IRON GRATE, TYPE B	
	CAST IRON GRATE, TYPE C	
	UNDERDRAIN RISER	
	REINFORCED CONCRETE PIPE END SECTION	
	ENERGY DISSIPATER FOR CULVERT	
E-100	CONSTRUCTION APPROACH SIGNS	01/02/2004
E-100A	SIDE ROAD CONSTRUCTION - APPROACH SIGNS	01/02/2004
E-101	CONSTRUCTION SIGN DETAILS	05/30/2003
E-102	CONSTRUCTION SIGN DETAILS	06/30/2003
E-102A	CONSTRUCTION SIGN DETAILS	05/01/2004
E-106	TRAFFIC CONTROL MISCELLANEOUS DETAILS	03/01/2004
E-107	DELINEATION, BARRICADES AND DETOURS FOR U-TURNS ON DIVIDED HIGHWAY	06/30/2003
E-107A	BREAKAWAY BARRICADE DETAILS	08/08/1995
E-108	CONSTRUCTION ZONE LONGITUDINAL DROP OFFS	08/18/1995
E-121	STANDARD SIGN PLACEMENT CONVENTIONAL ROAD	08/08/1995
E-123	GUIDE SIGN PLACEMENT	03/16/2004
	MISCELLANEOUS DETAILS	
E-141	REGULATORY SIGN DETAILS	09/20/1995
E-143	REGULATORY SIGN DETAILS	06/15/2004
E-150	WARNING SIGN DETAILS	05/01/2004
E-152	WARNING SIGN DETAILS	05/01/2004
E-160	FLANGED CHANNEL STEEL SIGN POST	05/20/1999
E-164	SQUARE STEEL SIGN POST	05/20/1999
E-190	RAILROAD CROSSING SIGNS AND PAVEMENT MARKINGS	06/30/2003
E-191	PAVEMENT MARKING DETAILS	02/01/1999
E-193	PAVEMENT MARKING DETAILS	08/18/1995
F-2	CHAIN LINK FENCE (TYPE I)	06/01/1994
	DRIVE GATE FOR CHAIN LINK FENCE (TYPE I)	
	WALK GATE FOR CHAIN LINK FENCE (TYPE I)	
G-1	STEEL BEAM GUARDRAIL WITH STEEL POSTS	01/03/2000
	STEEL BEAM GUARDRAIL WITH WOOD POSTS	
G-1d	STEEL BEAM GUARDRAIL APPROACH END TERMINAL	01/03/2000
	STEEL BEAM GUARDRAIL TRAILING END TERMINAL	
	ANCHOR FOR STEEL BEAM GUARDRAIL	
	STEEL BEAM MEDIAN BARRIER	

FINAL HYDRAULIC REPORT

HYDROLOGIC DATA

Date: Oct. 2007

DRAINAGE AREA : 218.5 sq. mi.
CHARACTER OF TERRAIN : Hilly to mountainous
STREAM CHARACTERISTICS : Straight, locally anabranched, incised and semi-alluvial
NATURE OF STREAMBED : Sand, gravel and cobbles

PEAK FLOW DATA

Q 2.33 =	6,000 cfs	Q 50 =	16,800 cfs
Q 10 =	11,400 cfs	Q 100 =	19,400 cfs
Q 25 =	14,500 cfs	Q 500 =	28,000 cfs

DATE OF FLOOD OF RECORD: September 1938
ESTIMATED DISCHARGE: Unknown
WATER SURFACE ELEV.: Unknown
NATURAL STREAM VELOCITY : @ Q25 = 5.9 fps
ICE CONDITIONS : Moderate
DEBRIS: Moderate
DOES THE STREAM REACH MAXIMUM HIGHWATER ELEV. RAPIDLY? No
IS ORDINARY RISE RAPID? No
IS STAGE AFFECTED BY UPSTREAM OR DOWNSTREAM CONDITIONS? No
IF YES, DESCRIBE:

WATERSHED STORAGE: 1% HEADWATERS:
UNIFORM: X
IMMEDIATELY ABOVE SITE:

EXISTING STRUCTURE INFORMATION

STRUCTURE TYPE: Two span truss bridge
YEAR BUILT: 1939
CLEAR SPAN(NORMAL TO STREAM): 224 ft.
VERTICAL CLEARANCE ABOVE STREAMBED: 18 ft.
WATERWAY OF FULL OPENING: 2,800 sq. ft.
DISPOSITION OF STRUCTURE: Replace superstructure
TYPE OF MATERIAL UNDER SUBSTRUCTURE: Gravel and sand over silt and clay

WATER SURFACE ELEVATIONS AT:

Q2.33 =	506.5 ft.	VELOCITY =	4.2 fps
Q10 =	510.3 ft.	"	5.4 fps
Q25 =	512.0 ft.	"	5.9 fps
Q50 =	513.1 ft.	"	6.3 fps
Q100 =	514.4 ft.	"	6.3 fps

LONG TERM STREAMBED CHANGES: None noted.

IS THE ROADWAY OVERTOPPED BELOW Q100: Yes
FREQUENCY: Q30
RELIEF ELEVATION: 512.2 ft.
DISCHARGE OVER ROAD @Q100: 1,570 cfs

UPSTREAM STRUCTURE

TOWN: Pownal — DISTANCE: 4.3 mi.
HIGHWAY# : T.H. 8 — STRUCTURE #: 42
CLEAR SPAN: 168 ft. — CLEAR HEIGHT: 19 ft.
YEAR BUILT: 1949 — FULL WATERWAY: 3,100 sq. ft.
STRUCTURE TYPE: 3 span steel beam bridge

DOWNSTREAM STRUCTURE

TOWN: Pownal — DISTANCE: 1.8 mi.
HIGHWAY# : VT Rte. 346 — STRUCTURE #: 7
CLEAR SPAN: 216 ft. — CLEAR HEIGHT: 17 ft.
YEAR BUILT: 1983 — FULL WATERWAY: 3,390 sq. ft.
STRUCTURE TYPE: 2 span plate girder bridge

LOAD FACTOR LOAD RATING (TONS)

LOADING LEVELS (LOAD FACTOR)	TRUCK H	HS	3S2	6 AXLE	3A. STR.	4A. STR.	5A. SEMI
INVENTORY A=2.171 B=1.00	32	46					
POSTED A=1.551 B=1.40	45	64	123		108	111	120
OPERATING A=1.301 B=1.67		76	147	167	128	132	

STRENGTH RF = $\frac{\phi M_N - 1.3 M_{DL}}{A \times M_{LL+I}}$ SERVICEABILITY RF = $\frac{.95 F_y S_{LL+I} - M_{DL}\frac{S_{NC}}{S_{DL}} - M_{SDL}\frac{S_{LT}}{S_{SDL}}}{1.67 M_{LL+I}}$

TRAFFIC DATA

YEAR	ADT	DHV	% D	% T	ADTT
1998	690	100	57	1	55
2018	940	130	57	2	95

20 year ESAL for flexible pavement from 1998 to 2018 : 295,000
40 year ESAL for flexible pavement from 1998 to 2038 : 801,000
Design Speed : 25 mph

PROPOSED STRUCTURE

STRUCTURE TYPE: 2 span plate girder bridge

CLEAR SPAN(NORMAL TO STREAM): 224 ft.
VERTICAL CLEARANCE ABOVE STREAMBED: 18 ft.
WATERWAY OF FULL OPENING: 2,900 sq. ft.

WATER SURFACE ELEVATIONS AT:

Q2.33 =	506.5 ft.	VELOCITY=	4.2 fps
Q10 =	510.3 ft.	"	5.4 fps
Q25 =	512.0 ft.	"	5.9 fps
Q50 =	513.1 ft.	"	6.3 fps
Q100 =	514.2 ft.	"	6.6 fps

IS THE ROADWAY OVERTOPPED BELOW Q100: No
FREQUENCY: Q100
RELIEF ELEVATION: 514.2 ft.
DISCHARGE OVER ROAD @Q100: 0 cfs

AVERAGE LOW ELEVATION OF SUPERSTRUCTURE: 514.3 ft. span 1, 517.3 ft. span 2
VERTICAL CLEARANCE: @ Q25 = 2.3 ft. span 1, 5.3 ft. span 2

SCOUR: 4' contraction scour and 7' pier scour = 11' total scour at pier, for Q100 and Q500

REQUIRED CHANNEL PROTECTION: Stone Fill, Type II

PERMIT INFORMATION

AVERAGE DAILY FLOW:	455 cfs	DEPTH OR ELEVATION:
ORDINARY LOW WATER:	200 cfs	Elevation 498 ft.
ORDINARY HIGH WATER:	2,575 cfs	Elevation 502 ft.

TEMPORARY BRIDGE REQUIREMENTS

STRUCTURE TYPE: Temporary bridge installed under a separate contract.
CLEAR SPAN (NORMAL TO STREAM):
VERTICAL CLEARANCE ABOVE STREAMBED:
WATERWAY AREA OF FULL OPENING:

ADDITIONAL INFORMATION

DESIGN CRITERIA

1. DESIGN LIVE LOAD AASHTO HS-25-44
2. DESIGN SPAN SPAN #1 - 134' ; SPAN #2 - 96' C/L BRG. TO C/L BRG.
3. ALLOWABLE LOAD FOR SPREAD FOOTINGS ON SOIL 4 ksf (WW 3 AND WW 4)
   ON LEDGE N/A
4. DESIGN LOAD FOR PILING 105 kips (PILES FOR WW 1 AND WW 2)
   TYPE HP 12 X 53
   ESTIMATED LENGTH 88 FT. (SEE BORING LOGS FOR FURTHER INFORMATION)
   ULTIMATE PILE CAPACITY 315 kips (WITH A FACTOR OF SAFETY OF 3.0)
5. STRUCTURAL STEEL AASHTO M 270/M 270 GRADE 50W
6. REINFORCING STEEL GRADE 60
7. CONCRETE, HIGH PERFORMANCE CLASS A f'c: 4000 psi
   CONCRETE, HIGH PERFORMANCE CLASS B f'c: 3500 psi
8. DESIGN SOIL UNIT WEIGHT 140 pcf
9. DESIGN LOAD FOR SPREAD FOOTINGS ON SOIL 3.0 ksf (WW 3 AND WW 4)

TRAFFIC MAINTENANCE

1. IS TRAFFIC TO BE MAINTAINED? YES
   IF YES, ON EXISTING STRUCTURE? NO
   OR ON TEMPORARY BRIDGE? YES*
   ONE OR TWO-WAY TRAVEL? ONE LANE - TWO- WAY TRAVEL
2. TRAFFIC CONTROL SIGNALS REQUIRED? NO
3. ARE SIDEWALKS REQUIRED? NO
   IF SO, ON WHAT SIDE?

* TEMPORARY BRIDGE ALREADY INSTALLED

PROJECT NAME: **POWNAL**
PROJECT NUMBER: **BRZ 1441(19) C/2**

FILE NAME: 87e045pi.xls — PLOT DATE: 2/27/2008
PROJECT LEADER: R. Whitcomb — DRAWN BY: L. Bullock
DESIGNED BY: C. Carlson — CHECKED BY: C. Carlson
PRELIMINARY INFORMATION SHEET — SHEET 2 OF 108

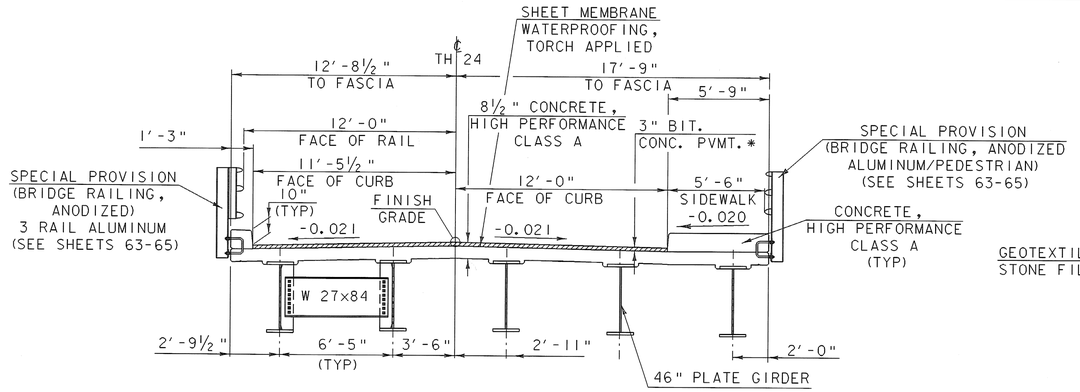

TYPICAL BRIDGE SECTION

SCALE ¼" = 1'-0

* 2 LIFTS OF 1½" BIT. CON. PAVEMENT, (TYPE III OR TYPE IV)

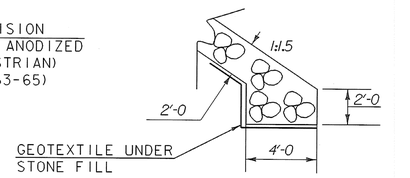

STONE FILL, TYPE II DETAIL

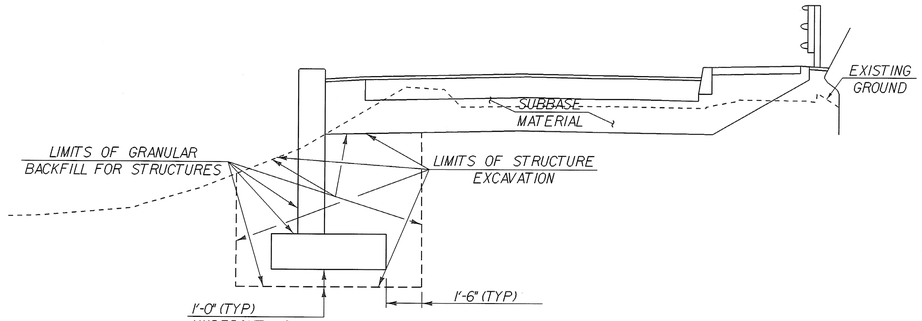

TYPICAL WINGWALL #3 SECTION (WW #4 SIMILIAR)

(NOT TO SCALE)

MATERIAL ITEM	TOLERANCE
PAVEMENT	±¼" TOTAL THICKNESS
BASE COURSE	± ½"
SUBBASE	± 1"
SAND BORROW	± 1"

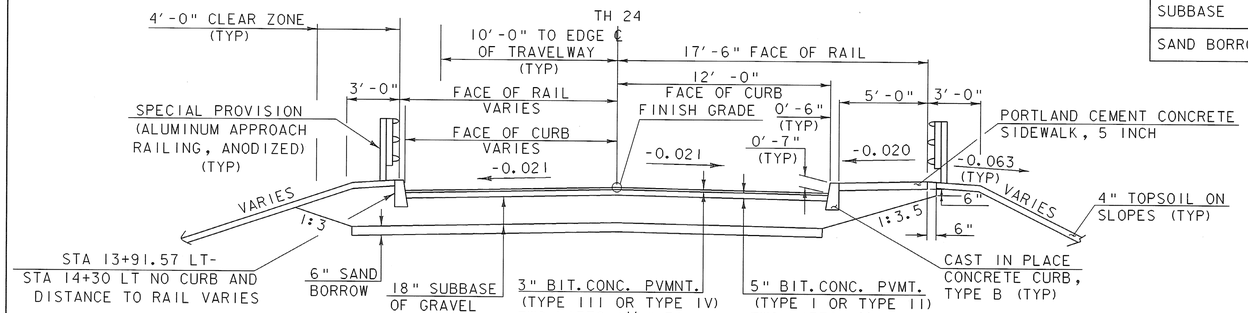

ROADWAY SECTION W/ GUARDRAIL

(STA 10+85 RT (+/-) - STA 11+57 RT)
(STA 11+25 LT +/- - STA 11+57 LT)
(STA 13+91.57 - STA 14+30)

SCALE ¼" = 1'-0

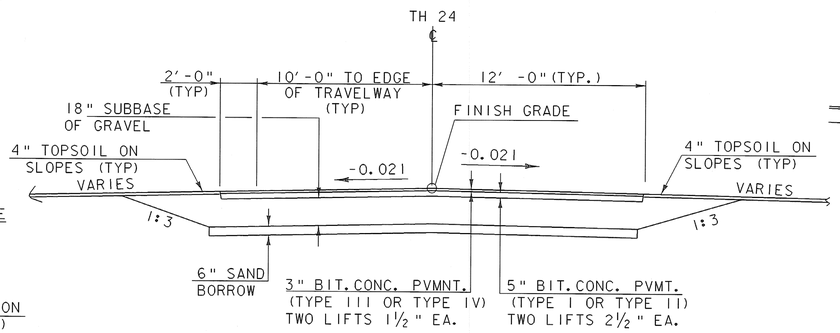

ROADWAY SECTION W/OUT GUARDRAIL

(STA 14+30 - STA 16+77)

SCALE ¼" = 1'-0

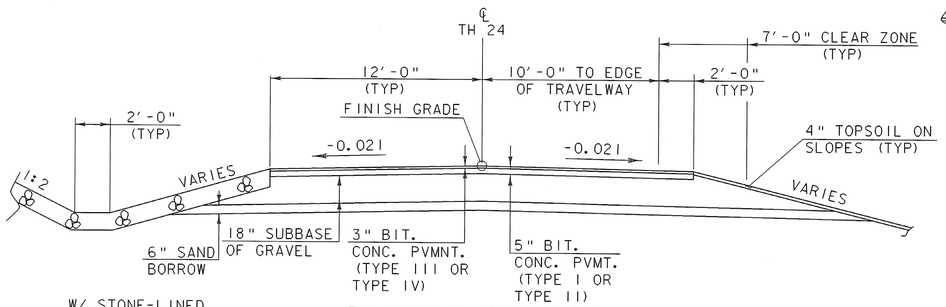

ROADWAY SECTION

(STA 8+75 - STA 10+85 +/-)

SCALE ¼" = 1'-0

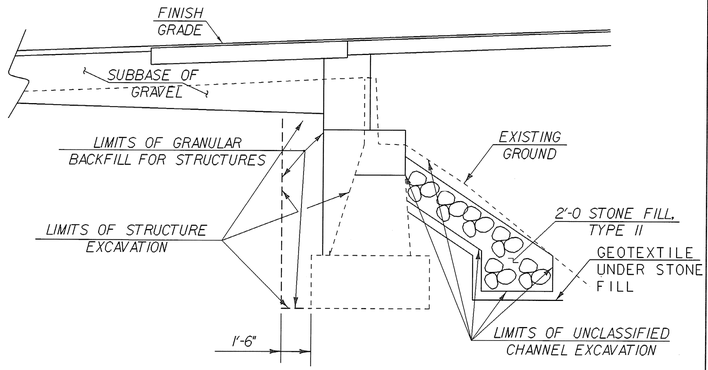

TYPICAL ABUTMENT NO. 1 SECTION

(NOT TO SCALE)

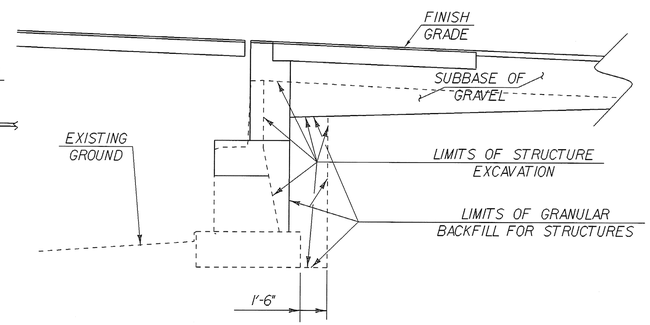

TYPICAL ABUTMENT NO. 2 SECTION

(NOT TO SCALE)

TYPICAL SHEET

*SEE SHEET 17 FOR TYPICAL SECTIONS FOR TH25 AND TH26
*SEE SHEET 16 FOR TYPICAL SECTION FOR WWTF ROAD ALONG RAILROAD TRACKS

PROJECT NAME: POWNAL
PROJECT NUMBER: BRZ 1441(19) C/2

FILE NAME: /PW/87e045/se045typ.dgn
PROJECT LEADER: R. Whitcomb
DESIGNED BY: C. Carlson
se045typ,i
PLOT DATE: 29-FEB-2008
DRAWN BY: str3
CHECKED BY: C. Carlson
SHEET 3 OF 108

SUMMARY OF ESTIMATED QUANTITIES

ROADWAY	TRAINING	EROSION CONTROL	BRIDGE	FULL C.E. ITEMS
1				
1				
2400				
			20	
			100	
330				
420				
90		10		
10				
1				
80			180	
60			250	
200				
1960		10		
14			2	
1032			102	
			273	
28			156	
			1	
			620	
			380900	
			140	
3260			15810	
			590	
			75140	
			1	
			1	
			1	
			50	
			24	
			31	
			610	
33				
1				
			416	
			1	
			1	
			22	
			10	
			5	

TOTALS

GRAND TOTAL	FINAL
1	
1	
2400	
20	
100	
330	
420	
100	
10	
1	
260	
310	
200	
1970	
16	
1134	
273	
184	
1	
620	
380900	
140	
19070	
590	
75140	
1	
1	
1	
50	
24	
31	
610	
33	
1	
416	
1	
1	
22	
10	
5	

DESCRIPTIONS

UNIT	ITEMS	ITEM NUMBER	ROUND
LS	CLEARING AND GRUBBING, NCLUDING INDIVIDUAL TREES AND STUMPS	201.10	
EACH	DEMOLITION AND DISPOSAL OF BUILDING	202.10	
CY	COMMON EXCAVATION	203.15	
CY	SOLID ROCK EXCAVATION	203.16	
CY	UNCLASSIFIED CHANNEL EXCAVATION	203.27	
CY	EXCAVATION OF SURFACES AND PAVEMENTS	203.28	
CY	SAND BORROW	203.31	
CY	TRENCH EXCAVATION OF EARTH	204.20	
CY	TRENCH EXCAVATION OF ROCK	204.21	
CY	TRENCH EXCAVATION OF EARTH, EXPLORATORY (N.A.B.I.)	204.22	
CY	STRUCTURE EXCAVATION	204.25	
CY	GRANULAR BACKFILL FOR STRUCTURES	204.30	
SY	COLD PLANING, BITUMINOUS PAVEMENT	210.10	
CY	SUBBASE OF GRAVEL	301.15	
CWT	EMULSIFIED ASPHALT	404.65	
TON	BITUMINOUS CONCRETE PAVEMENT (PG 58-28)	406.25	
CY	CONCRETE, HIGH PERFORMANCE CLASS A	501.33	
CY	CONCRETE, HIGH PERFORMANCE CLASS B	501.34	
LS	FURNISHING EQUIPMENT FOR DRIVING PILING	504.10	
LF	STEEL PILING, HP 12 X 53	505.15	
LB	STRUCTURAL STEEL, PLATE GIRDER	506.55	
LB	STRUCTURAL STEEL	506.60	
LB	REINFORCING STEEL	507.15	
LF	DRILLING AND GROUTING DOWELS	507.16	
LB	EPOXY COATED REINFORCING STEEL	507.17	
LS	SHEAR CONNECTORS (1600 - 7/8" X 7")	508.15	
LS	STRUCTURAL PAINTING, SHOP APPLIED (3.5 TONS)	513.25	
LS	SURFACE PREPARATION, SHOP (3.5 TONS)	513.40	
GAL	WATER REPELLENT, SILANE	514.10	
LF	BRIDGE EXPANSION JOINT, ASPHALTIC PLUG	516.10	
LF	BRIDGE EXPANSION JOINT, VERMONT	516.11	
SY	SHEET MEMBRANE WATERPROOFING, TORCH APPLIED	519.20	
LF	REMOVAL OF EXISTING RAILING	525.10	
LS	MAINTENANCE OF STRUCTURES AND APPROACHES	527.10	
SY	REMOVAL OF BRIDGE PAVEMENT	529.10	
EACH	REMOVAL OF STRUCTURE (5400 SF-EST)	529.15	
EACH	PARTIAL REMOVAL OF STRUCTURE	529.20	
CY	REMOVAL OF CONCRETE OR MASONRY	529.25	
EACH	BEARING DEVICE ASSEMBLY, PREFORMED FABRIC PAD	531.10	
EACH	BEARING DEVICE ASSEMBLY, POT	531.12	

DETAILED SUMMARY OF QUANTITIES

QUANTITIES	UNIT	ITEMS
		TEMPORARY EROSION CONTROL
		(INCLUDED UNDER EROSION CONTROL)
10	CY	ITEM 204.20 TRENCH EXCAVATION OF EARTH
10	CY	ITEM 301.15 SUBBASE OF GRAVEL
10	HR	ITEM 608.25 ALL PURPOSE EXCAVATOR RENTAL, TYPE I
10	CY	ITEM 613.10 STONE FILL, TYPE I
50	SY	ITEM 649.51 GEOTEXTILE FOR SILT FENCE
10	LB	ITEM 651.17 SEED-WINTER RYE
1	TON	ITEM 651.25 HAY MULCH
40	EA	ITEM 653.15 HAY BALES
700	SY	ITEM 653.20 TEMPORARY EROSION MATTING
20	CY	ITEM 653.25 TEMPORARY STONE CHECK DAM, TYPE I
30	CY	ITEM 653.35 VEHCILE TRACKING PAD
2	EA	ITEM 653.40 INLET PROTECTION DEVICE, TYPE I
1410	LF	ITEM 653.55 PROJECT DEMARCATION FENCE
320	SF	ITEM 900.670 SPECIAL PROVISION (GEOTEXTILE FOR SILT FENCE, WOVEN WIRE REINFORCED)
		EARTHWORKS SUMMARY
2400	CY	COMMON EXCAVATION (2400*1)
30	CY	UNCLASSIFIED CHANNEL EXCAVATION (100*0.3)
75	CY	STRUCTURE EXCAVATION (250*0.3)
2505	CY	TOTAL FILL AVAILABLE
506	CY	FILL REQUIRED (440 CY*1.15)
2505	CY	LESS FILL AVAILABLE
1999	**CY**	**WASTE**

PROJECT NAME: POWNAL
PROJECT NUMBER: BRZ 1441(19) C/2

FILE NAME: 87e045/str3/se045qty.dgn
PROJECT MANAGER: R. WHITCOMB
DESIGNED BY: C. CARLSON
QUANTITY SHEET #1

PLOT DATE: 03/10/2008
DRAWN BY: D. PETERSON
CHECKED BY: D. PETERSON
SHEET 4 OF 108

SUMMARY OF ESTIMATED QUANTITIES

ROADWAY	TRAINING	EROSION CONTROL	BRIDGE	FULL C.E. ITEMS
80				
80				
80				
60				
60				
5				
1				
2				
		10		
		0.3		
350		10		
			70	
215				
50				
28				
165				
1				
149				
2				
53				
26				
800				
				1
				1
				1
				1
	520			
1				
1				
485				
1680				
80				
8				
2				
			110	
		50		

TOTALS

GRAND TOTAL	FINAL
80	
80	
80	
60	
60	
5	
1	
2	
10	
0.3	
360	
70	
215	
50	
28	
165	
1	
149	
2	
53	
26	
800	
1	
1	
1	
1	
520	
1	
1	
485	
1680	
80	
8	
2	
110	
50	

DESCRIPTIONS

UNIT	ITEMS	ITEM NUMBER	ROUND
	BEGIN OPTION AA		
LF	18" PCCSP .064 (2-2/3 X 1/2)	601.0415	
LF	18" CAAP .060 (2-2/3 X 1/2)	601.0215	
LF	18" CPEP(SL)	601.2615	
	END OPTION AA		
	BEGIN OPTION BB		
LF	42" PCCSP .109 (2-2/3 X 1/2)	601.0452	
LF	42" CAAP .105 (2-2/3 X 1/2)	601.0252	
	END OPTION BB		
EACH	CHANGING ELEVATION OF SEWER MANHOLES	604.42	
EACH	CAST IRON GRATE WITH FRAME, TYPE B	604.46	
EACH	CAST IRON GRATE WITH FRAME, TYPE E	604.48	
HR	ALL PURPOSE EXCAVATOR RENTAL, TYPE I	608.25	
MGAL	DUST CONTROL WITH WATER	609.10	
CY	STONE FILL, TYPE I	613.10	
CY	STONE FILL, TYPE II	613.11	
LF	CAST-IN-PLACE CONCRETE CURB, TYPE B	616.28	
SY	PORTLAND CEMENT CONCRETE SIDEWALK, 5 INCH	618.10	
SF	DETECTABLE WARNING SURFACE	618.30	
LF	CHAIN-LINK FENCE, 6 FEET	620.12	
EACH	BRACING ASSEMBLY FOR CHAIN-LINK FENCE, 6 FEET	620.21	
LF	HD STEEL BEAM GUARDRAIL, GALVANIZED	621.21	
EACH	ANCHOR FOR STEEL BEAM RAIL	621.60	
LF	REMOVAL AND DISPOSAL OF GUARDRAIL	621.80	
EACH	REMOVAL AND DISPOSAL OF GUIDE POSTS	621.81	
HR	FLAGGERS	630.15	
LS	FIELD OFFICE, ENGINEERS	631.10	
LS	TESTING EQUIPMENT, CONCRETE	631.16	
LS	TESTING EQUIPMENT, BITUMINOUS	631.17	
LU	FIELD OFFICE TELEPHONE (N.A.B.I.)	631.25	
HR	EMPLOYEE TRAINEESHIP	634.10	
LS	MOBILIZATION/DEMOBILIZATION	635.11	
LS	TRAFFIC CONTROL	641.10	
LF	4 INCH WHITE LINE	646.20	
LF	4 INCH YELLOW LINE	646.21	
LF	24 INCH STOP BAR	646.26	
EACH	LETTER OR SYMBOL	646.30	
EACH	RAILROAD CROSSING SYMBOL	646.32	
SY	GEOTEXTILE UNDER STONE FILL	649.31	
SY	GEOTEXTILE FOR SILT FENCE	649.51	

DETAILED SUMMARY OF QUANTITIES

QUANTITIES	UNIT	ITEMS

NABI = NOT A BID ITEM

PROJECT NAME: POWNAL

PROJECT NUMBER: BRZ 1441(19) C/2

FILE NAME: 87e045/str3/se045qty.dgn
PROJECT MANAGER: R. WHITCOMB
DESIGNED BY: C. CARLSON
QUANTITY SHEET #2

PLOT DATE: 03/10/2008
DRAWN BY: D. PETERSON
CHECKED BY: D. PETERSON

SUMMARY OF ESTIMATED QUANTITIES

ROADWAY	TRAINING	EROSION CONTROL	BRIDGE	FULL C.E. ITEMS	GRAND TOTAL	FINAL	UNIT	ITEMS	ITEM NUMBER	ROUND
		30			30		LB	SEED	651.15	
		10			10		LB	SEED, WINTER RYE	651.17	
		300			300		LB	FERTILIZER	651.18	
		1			1		TON	AGRICULTURAL LIMESTONE	651.20	
		1			1		TON	HAYMULCH	651.25	
		300			300		CY	TOPSOIL	651.35	
			270		270		SY	GRUBBING MATERIAL	651.40	
		1			1		LS	EPSC PLAN	652.10	
		50			50		HR	MONITORING EPSC PLAN	652.20	
		1			1		LU	MAINTENANCE OF EPSC PLAN (N.A.B.I.)	652.30	
		40			40		EACH	HAYBALES	653.15	
		700			700		SY	TEMPORARY EROSION MATTING	653.20	
		20			20		CY	TEMPORARY STONE CHECK DAM, TYPE I	653.25	
		30			30		CY	VEHICLE TRACKING PAD	653.35	
		2			2		EACH	INLET PROTECTION DEVICE, TYPE I	653.40	
		1410			1410		LF	PROJECT DEMARCATION FENCE	653.55	
75					75		SF	TRAFFIC SIGNS, TYPE A	675.20	
								BEGIN OPTION CC		
200					200		LF	FLANGED CHANNEL SIGN POST	675.301	
200					200		LF	SQUARE TUBE SIGN POST AND ANCHOR	675.341	
								END OPTION CC		
34					34		EACH	REMOVING SIGNS	675.50	
3					3		EACH	ERECTING SALVAGED SIGNS	675.60	
200					200		HR	SPECIAL PROVISION (FLAGGERS, RAILROAD)	900.630	
173					173		LF	SPECIAL PROVISION (ALUMINUM APPROACH RAILING, ANODIZED)	900.640	
			234		234		LF	SPECIAL PROVISION (BRIDGE RAILING, ANODIZED 3 RAIL ALUMINUM)	900.640	
			234		234		LF	SPECIAL PROVISION (BRIDGE RAILING, ANODIZED ALUMINUM/PEDESTRIAN)	900.640	
		320			320		SY	SPECIAL PROVISION (GEOTEXTILE FOR SILT FENCE, WOVEN WIRE REINFORCED)	900.675	

DETAILED SUMMARY OF QUANTITIES

QUANTITIES	UNIT	ITEMS
		NABI = NOT A BID ITEM

PROJECT NAME: POWNAL
PROJECT NUMBER: BRZ 1441(19) C/2

FILE NAME: 87e045/str3/se045qty.dgn
PROJECT MANAGER: R. WHITCOMB
DESIGNED BY: C. CARLSON
QUANTITY SHEET #3

PLOT DATE: 03/10/2008
DRAWN BY: D. PETERSON
CHECKED BY: D. PETERSON

SUMMARY OF BRIDGE QUANTITIES

SUPER-STRUCTURE	APPROACH SLAB 1	APPROACH SLAB 2	ABUTMENT 1	ABUTMENT 2	PIER	CHANNEL	BRIDGE TOTAL	UNIT	ITEMS	ITEM NUMBER
				20			20	CY	SOLID ROCK EXCAVATION	203.16
						100	100	CY	UNCLASSIFIED CHANNEL EXCAVATION	203.27
			70	110			180	CY	STRUCTURE EXCAVATION	204.25
			125	125			250	CY	GRANULAR BACKFILL FOR STRUCTURES	204.30
2							2	CWT	EMULSIFIED ASPHALT	404.65
102							102	TON	BITUMINOUS CONCRETE PAVEMENT (PG 58-28)	406.25
273							273	CY	CONCRETE, HIGH PERFORMANCE CLASS A	501.33
	17	17	52	54	16		156	CY	CONCRETE, HIGH PERFORMANCE CLASS B	501.34
			1				1	LS	FURNISHING EQUIPMENT FOR DRIVING PILING	504.10
			620				620	LF	STEEL PILING, HP 12 X 53	505.15
380900							380900	LB	STRUCTURAL STEEL, PLATE GIRDER	506.55
140							140	LB	STRUCTURAL STEEL	506.60
			7290	6860	1660		15810	LB	REINFORCING STEEL	507.15
			264	258	68		590	LF	DRILLING AND GROUTING DOWELS	507.16
71620	1720	1800					75140	LB	EPOXY COATED REINFORCING STEEL	507.17
1							1	LS	SHEAR CONNECTORS (1600 - 7/8" X 7")	508.15
1							1	LS	STRUCTURAL PAINTING, SHOP APPLIED (3.5 TONS)	513.25
1							1	LS	SURFACE PREPARATION, SHOP (3.5 TONS)	513.40
25			5	5	15		50	GAL	WATER REPELLENT, SILANE	514.10
24							24	LF	BRIDGE EXPANSION JOINT, ASPHALTIC PLUG	516.10
31							31	LF	BRIDGE EXPANSION JOINT, VERMONT	516.11
610							610	SY	SHEET MEMBRANE WATERPROOFING, TORCH APPLIED	519.20
416							416	SY	REMOVAL OF BRIDGE PAVEMENT	529.10
1							1	EACH	REMOVAL OF STRUCTURE (5400 SF-EST)	529.15
1							1	EACH	PARTIAL REMOVAL OF STRUCTURE	529.20
			8	8	6		22	CY	REMOVAL OF CONCRETE OR MASONRY	529.25
10							10	EACH	BEARING DEVICE ASSEMBLY, PREFORMED FABRIC PAD	531.10
5							5	EACH	BEARING DEVICE ASSEMBLY, POT	531.12
			70				70	CY	STONE FILL, TYPE II	613.11
			110				110	SY	GEOTEXTILE UNDER STONE FILL	649.31
			270				270	SY	GRUBBING MATERIAL	651.40
234							234	LF	SPECIAL PROVISION (BRIDGE RAILING, ANODIZED 3 RAIL ALUMINUM)	900.640
234							234	LF	SPECIAL PROVISION (BRIDGE RAILING, ANODIZED ALUMINUM/PEDESTRIAN)	900.640

DETAILED SUMMARY OF QUANTITIES

QUANTITIES	UNIT	ITEMS

PROJECT NAME: POWNAL
PROJECT NUMBER: BRZ 1441(19) C/2

FILE NAME: 87e045/str3/se045qty.dgn
PROJECT MANAGER: R. WHITCOMB
DESIGNED BY: C. CARLSON
QUANTITY SHEET #4

PLOT DATE: 03/10/2008
DRAWN BY: D. PETERSON
CHECKED BY: D. PETERSON

TH 25 CURVE DATA NO. 1
Δ = 27°41'18" RT
D = 19°05'55"
R = 300'
T = 73.93'
L = 144.98'
E = 8.98
BANK = NORMAL

TH 25 STA 3+00.00
END SIDELINE CONSTRUCTION

N/F
HAYNES, NANCY J.
THERRIEN, JAMES P.

POE
Sta 3+09.90 P L

#3 40°
45 CL3
12-D4-21TS
TH26 STA. 7+30.41
23.36' RT.
PT
Sta 2+58.75
P L

N/F
BAKER, ANTHONY L.
& ATKINSON SALLY J.

TH 26 STA 7+00.00 =
TH 25 STA 1+85.14
Δ = 78°15'49"

TH26 STA. 7+93.65
24.75' RT.

TH 26 STA 7+12.12
BEGIN SIDELINE APPROACH

TH26 STA. 7+93.65 STONE FILL TYPE I (P)
CL.

PI Sta 8+32.03 BK=
Sta 8+31.98 AH

PT
Sta 8+48.97

TH26 STA. 7+01.47
24.75' RT.

TH26 STA. 7+20.68
24.29' LT.

TH 26 STA 8+75.00
END SIDELINE CONSTRUCTION

PC
Sta 8+15.10

TH26 STA. 8+01.47
24.75' LT.

TH 25 STA 1+12.00
BEGIN SIDELINE CONSTRUCTION

PC
Sta 1+13.78

PI Sta 1+87.71
Sta 1+84.83 BK

TH 25 STA 1+00=
℄ STA 11+02
Δ = 90°
(TAN. TO CURVE)

1 FOUCHER, LYNN B.

END APPROACH
BEGIN PROJECT
STA 10+50

PC
STA 10+66.29

TH24 STA. 10+07.14
89.44' LT.

TH 26 CURVE DATA NO. 1
Δ = 7°44'59"
D = 22°55'06"
R = 250'
T = 16.93'
L = 33.81'
E = 0.57
BANK = NORMAL

℄ CURVE DATA NO. 1
Δ = 89°
D = 76°23'40"
R = 75'
T = 73.71'
L = 116.50'
E = 30.15
BANK = NORMAL

TH24 STA 9+91.18
24.75' LT.

BM#1
USC&GS 1935 ELEV 513.92
CHS ON GARAGE FOUNDATION
ON NORTH WEST CORNER

PI
Sta 9+75.14
Δ = 2°30'18" LT
NO CURVE

STONE FILL TYPE I

STATUTORY 3 ROD R-O-W

BEGIN APPROACH
STA 8+75.00

EXISTING BRIDGE DATA

TWO SIMPLE SPAN THRU TRUSS
BUILT 1939
OVERALL LENGTH 234'
SPAN ONE - 133'
SPAN TWO - 95'
4'-0" SIDEWALK
0'-6" CURB
ROADWAY WIDTH 18'-0"
OUT TO OUT WIDTH 19'-4"
ABUTMENT NO. 1 & PIER ARE CONCRETE ON TIMBER PILES
ABUTMENT NO. 2 IS CONCRETE

HIGGINS, BOBBY J. SR. & LINDA LEE
4
BISSON, ALONZO J.
2B
2C
2A
7A
7
PROUTY, JEAN L. & DONALD E. JR.

SAVE 2" CEDAR TREES
8/72 SPC 8 8-351
WATERY MH
PUMP HOUSE
SEWER MH
POWNAL TANNERY DEFUNCT
APPROX. LOCATION OF 8" C.I. WATER LINE (DEFUNCT)
APPROXIMATE RELOCATION OF AERIAL UTILITIES
℄ OF EXISTING TEMPORARY BRIDGE S57°W 335'
HOOSIC RIVER
STONE FILL, TYPE II (TYP)
℄ PIER STA 12+93.62
PT Sta 11+57.80
BEGIN BRIDGE P.O.S.T. STA 11+57.62
END BRIDGE STA 13+91.87
TH24 STA. 10+86.51
16.52' LT.
TH25 STA. 11+33.34
℄ CL.
CUL. & DR. (P)
M P.O.S.T. STA 11+47.88±
CHAN STA 5+03.49
Δ = 89° 50' 27"
BM#2
USC&GS 1935 ELEV 514.87
CHS ON BRIDGE WINGWALL
SOUTH EAST CORNER
1'-0 STONE FILL, TYPE I (TYP)
DITCH
GRAVEL DRIVE DRIVE(T)
DRIVE #2
DRIVE #1
RETIRE 2 STEEL POSTS
RETIRE #49/3/76/5-1
RETIRE #151/49/4
RETIRE #49/3/76/5
REMOVE(T)
INSTALL(T)
CONST(T)
DIT.(T)
CH(P)
OVERHEAD UE(P)
SNAKE HILL ROAD
FURLONG ROAD
DEAN ROAD
TH 24
SIDEWALK
CONC. WALL
GARAGE
ASH
RETIRE #2 X 5
DTC/9 H78SPPS PT14 40 Sta #5+46.71
BM#3
USC&GS 1935
ELEV 521.29
PAINT SPOT ON BRIDGE WINGWALL N.W. CORNER
CONCRETE DRIVE
BM#4 USC&GS 1935 ELEV 521.27
CHS ON OLD MILL TANNERY FOUND
N.W. CORNER
TOWN OF POWNAL
STA 5+00.00 BEGIN WWTF SIDELINE CONSTRUCTION
℄ STA 5+00.00 = M STA 14+29.00
Δ = 90°
PROPOSED NEW RR SIGNAL W/ FLASHING LIGHTS (SEE PROJECT NOTES)
BOULDERS @ 3' ALONG DRIVE
GRAVEL DRIVE
MCI FIBER OPTIC MARKER POST
INTERSECTION ROW PROJECT BRZ 1441(19) C/2
TH 24 14+58 CL
FITCHBURG R.R. CO. V381. VT
STA. 8135+85
BOSTON & MAINE CORPORATION JOINED BY SPRINGFIELD TERMINAL RAILROAD COMPANY
KAILROAD COMPAN
MAG 1987
N61°11'28.39"E
RR SIGNAL
MATCH LINE TO SHEET 18 OF 18

STA 6+50.00
END WWTF SIDELINE CONSTRUCTION
5
SEE PROJECT NOTES REGARDING CHAIN LINK FENCE AND EXISTING BARRIER
NEW CHAINLINK FENCE
BUILDING
EXISTING PAVEMENT TO BE REMOVED AND TOPSOIL WITH SEED & MULCH PLACED
PI Sta 5+30.73
N83°
#1 179
50 CL3
11 12-D2
RRU NO#14'
PC Sta 5+14.73 43' ℄
SIGNAL
RETIRE
N61°11'28.39"E

BEGIN ROW PROJECT
BRZ 1441(19) C/2
STA. 8+75.00 25.22' LT.

SCALE 1" = 20'-0
20 0 20

FOR R.O.W. USE ONLY

NOTE: FOR DRAINAGE DETAILS, SEE SHEET 18A & 18B
FOR SIGNS AND PAVEMENT MARKINGS, SEE SHEETS 19 - 22.

LINES SHOWN ON THIS PLAN AS EXISTING PROPERTY LINES P/L ARE BELIEVED TO BE ACCURATE BUT SHOULD NOT BE RELIED UPON FOR PURPOSES UNRELATED TO THE TOWN OF POWNAL'S ACQUISITION OF LAND AND RIGHTS FOR THIS PROJECT.

SHEET NAME: RIGHT OF WAY LAYOUT SHEET 1
PROJECT: POWNAL
PROJECT NO.: BRZ1441(19)C/2
DESIGN FILE NAME: 87e045/str/se045bdr.dgn
IPARM FILE NAME: se045lal.i
SURVEYED BY: R. MOREAU
PROJECT MANAGER: R. WHITCOMB
R. O. W. SHEET 17 OF 18 SHEETS
PLOT DATE: 29-FEB-2008
SURVEY DATE: 4/91
DRAWN BY: C. CARLSON/S. MAGNAN
SHEET 8 OF 108

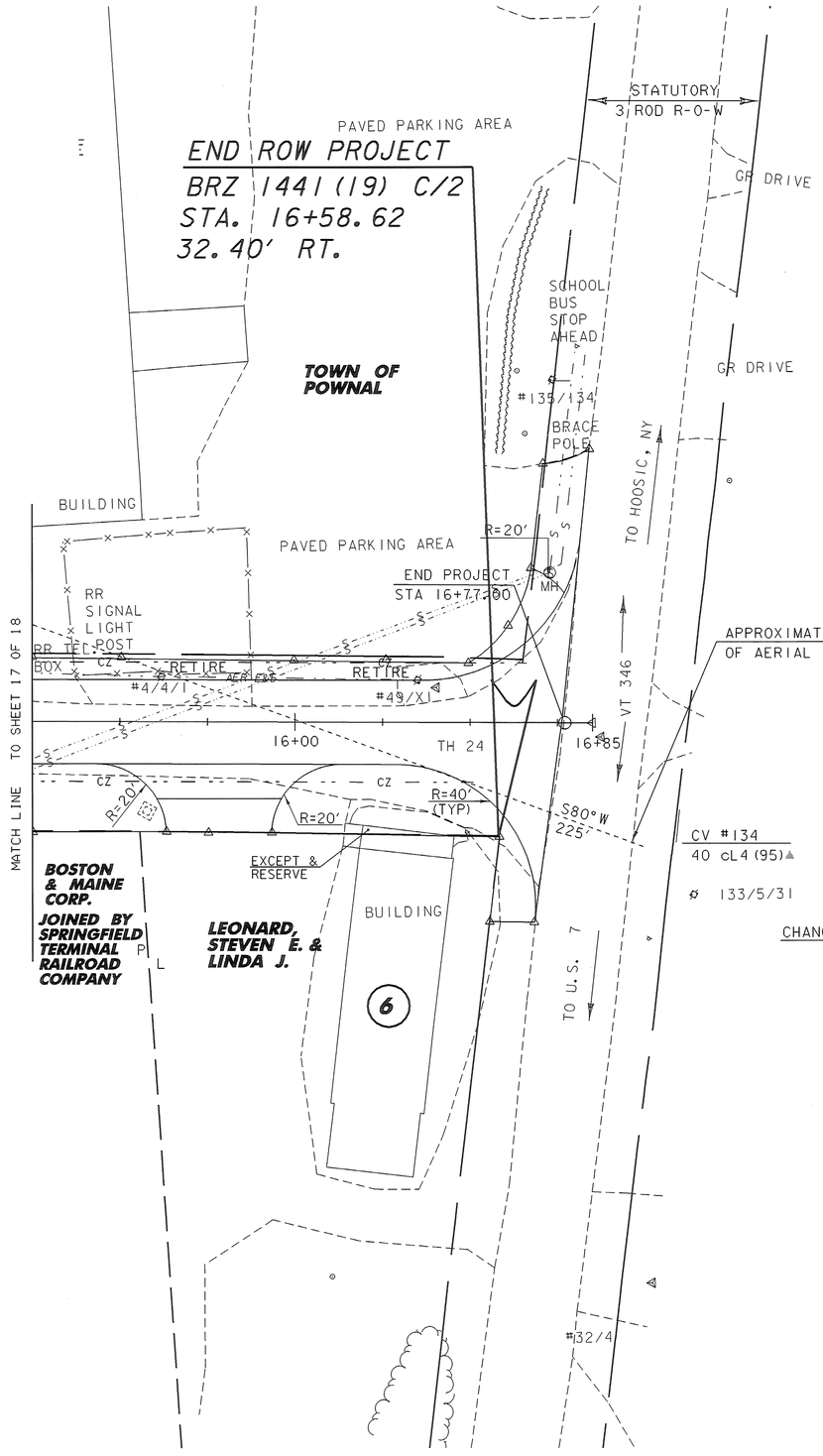

CV #134
40 cL4 (95)▲

⌀ 133/5/31

CONSTRUCT DRIVE
W/ PAVED APRONS
STA 15+78.00 RT
STA 16+76, 37' LT - 79' LT

CHANGE ELEVATION OF SEWER MANHOLE
STA 16+73 LT

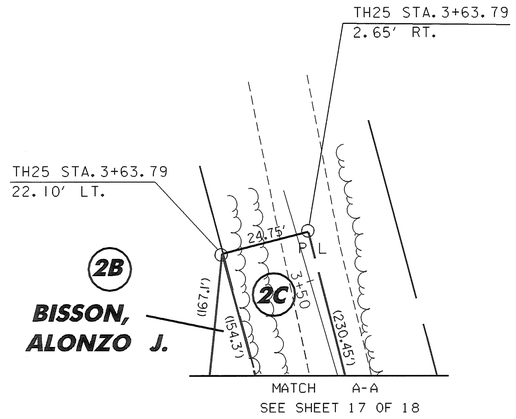

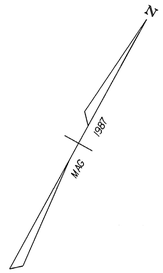

LINES SHOWN ON THIS PLAN AS EXISTING PROPERTY LINES P/L ARE BELIEVED TO BE ACCURATE BUT SHOULD NOT BE RELIED UPON FOR PURPOSES UNRELATED TO THE TOWN OF POWNAL'S ACQUISITION OF LAND AND RIGHTS FOR THIS PROJECT.

NOTE: FOR SIGNS AND PAVEMENT MARKINGS, SEE SHEETS 19 - 22.

SCALE 1" = 20'-0
20 0 20

SHEET NAME: RIGHT OF WAY LAYOUT SHEET 2

PROJECT NAME: POWNAL
PROJECT NUMBER: BRZ 1441(19) C/2
HIGHWAY NO.: TH 24
BRIDGE NO.: 41
OVER: HOOSIC RIVER

FILE NAME: 87e045/str/se045bdr.dgn
PROJECT MANAGER: R. WHITCOMB
DESIGNED BY: C. CARLSON
R. O. W. SHEET 18 OF 18 SHEETS
PLOT DATE: 29-FEB-2008
DRAWN BY: CARLSON/MAGNAN
IPARM NAME: se045la2.i
SHEET 9 OF 108

STATE OF VERMONT
AGENCY OF TRANSPORTATION
RIGHT OF WAY PLANS
DETAIL SHEET

TABLE OF PROJECT PROPERTY ACQUISITION

PARCEL NO.	GRANTOR	SHEET NO.	BEGINNING STATION	ENDING STATION	TAKING	REM.	RIGHTS	TITLE TAKEN	DATE	TOWN OR CITY RECORDED	BK.	PG.	REMARKS
1	FOUCHER, LYNN B.	17	TH24 8+75.0 LT. TH24 9+50.2 LT. TH24 9+66.0 LT. TH26 8+02.9 LT. TH26 8+03.1 LT. TH26 8+01.47 LT. TH26 7+99.9 LT. TH24 9+76.6 LT.	TH24 9+97.4 LT. TH24 9+96.5 LT. TH24 9+95.9 LT. TH26 8+40.2 LT. TH26 8+45.7 LT. TH26 8+40.1 LT. TH24 9+94.4 LT.			INSTALL (T) 291 S.F.± DITCH (P) 653 S.F.± REMOVE (T) 487 S.F.± SLOPE (T) 155 S.F.± CONST. (T) 151 S.F.± DITCH (P) 233 S.F.± REMOVE & RESET (T) ALL R.T. & I.	WDOE	09-08-05	POWNAL	140	478	PDF GARAGE INCLUDES PDF IRON PIN GARAGE
2A	BISSON, ALONZO J.	17	TH24 9+91.18 LT.	TH26 8+01.47 LT.	0.22A±					POWNAL			9,616 S.F.± INCL. MOBILE HOME, GARAGE, WELL, SEPTIC SYSTEM
2B		17,18	TH26 7+93.65 RT.	TH25 3+63.79 LT.	0.12A±					POWNAL			5,310 S.F.±
2C		17,18	TH24 9+91.18 CL.	TH25 3+63.79 CL.	0.94A±		ALL R.T. & I.						HWY. EASE. TH 24,25 & 26
3	DELETED	17											FORMERLY BAKER & ATKINSON
4	HIGGINS, BOBBY J. SR & LINDA LEE	17	TH25 2+25.00 RT. TH25 2+60.9 RT. TH25 2+07.6 RT.	TH25 2+97.5 RT. TH25 2+83.2 RT.			DRIVE (T) INSTALL (T) 288 S.F.± UTILITY EASE. (P) 871 S.F.±	WDOE	01-11-06	POWNAL	142	434	GRAVEL DRIVE EROSION CONTROL & PDF

REVISION NO.	SHEET	DESCRIPTION OF REVISION	DATE	MADE BY	APPROVED BY
1	15,17	PARCEL NO. 1 FOUCHER. DELETE CONST.(T) 279 SF±. DELETE SLOPE(T) 77 SF±. ADD ALL RT&I FOR GARAGE. ADD INSTALL(T) 291 SF±. CHANGE REMOVE(T) TO 487 SF±. CHANGE DITCH(P) TO 653 SF±. CHANGE CONST.(T) 158 SF± TO READ STA. 8+03.1 TO 8+70.9 151 SF± PER C.O. 9391.	10-19-04	G.J.F.	R.P.D.
2	15,17	PARCEL NO. 4 HIGGINS. CHANGE CONST.(T) TO INSTALL(T) 288SF±. CHANGE UTILITY EASEMENT TO 871 SF±. PER C.O. 9392.	10-19-04	G.J.F.	R.P.D.
3	16,17 18	PARCEL NO. 5 BOSTON & MAINE CORP. ADD REMOVE(T) 1520 SF± FOE REMOVAL OF EXISTING PAVEMENT ON TEMP. DETOUR. ADD CONCRETE BARRIER AT TH24 14+16.5. DELETE SLOPE(T) 7 SF±. PER C.O. 9393.	10-19-04	M.J.R.	R.P.D.
4	16,17	PARCEL NO. 7 PROUTY. CHANGE DITCH & DRAINAGE(T) RIGHT TO DITCH(P). PER C.O. 9394.	10-19-04	G.J.F.	R.P.D.
5	15,17	PARCEL NO. 1 FOUCHER. REMOVE 'EROSION CONTROL &' FROM THE REMARKS COLUMN. CHANGE DITCH (P) TO DIT. (P). LABEL ALL R.T. & I. FOR GARAGE. SHOW STATIONING FOR TH 25 & TH 26. ADD PROPERTY LINE BETWEEN THE BISSON AND FOUCHER LOTS. PER C.O. 9402.	01-18-05	M.J.R.	R.P.D.
6	15,17	PARCEL NO. 3 BAKER. DELETE CONST. (T). ADD INSTALL (T); 20 S.F.±; PDF. PER C.O. 9403.	01-18-05	M.J.R.	R.P.D.
7	17	PARCEL NO. 4 HIGGINS. REMOVE DASHED LINE DEPECITING INSTALL (T). NOT NEEDED. DEFINE PROPERTY LINE BETWEEN THE HIGGINS AND TOWN LOTS. SHOW STATIONING FOR TH 25. PER C.O. 9404.	01-18-05	M.J.R.	R.P.D.
8	16,17	PARCEL NO. 5 BOSTON AND MAINE CORPORATION. REMOVE CONST. (T) FROM STA. TH 24 14+72.0 LT. ~ TH 24 14+98.44 LT.; 130 S.F.±. PDF HAS BEEN REMOVED BY LEAD DIVISION. PER C.O. 9405.	01-18-05	M.J.R.	R.P.D.
9	16,17	PARCEL NO. 7 PROUTY. ELIMINATED SLOPE AT STA. TH 24 9+78.5 ~ TH 24 11+67.9 RT. CHANGED (P) TO (T) FOR DITCH AT STA. TH 24 10+16.9 ~ TH 24 11+58.7 SHOW CAHNNEL AREA ON LAYOUT. PER C.O. 9406.	01-18-05	M.J.R.	R.P.D.
10	15,17	PARCEL NO. 3 BAKER & ATKINSON. DELETE PARCEL. PER C.O. 9411.	03-10-05	P.J.H.	R.P.D.

ACCT. mcassidy
M:\Projects\87e045\RightOfWay\new_re045d.dgn
DATE PLOTTED 08-FEB-2008

DR. (P)- DRAINAGE RIGHT
DIT. (P)- DITCHING RIGHT
CH. (P)- CHANNEL RT.
DRIVE (T)- DRIVE RIGHT
CUL. (P)- CULVERT RIGHT
[W]- WATER SOURCES

PRESENT R.O.W.
TAKING WITHOUT ACCESS
TAKING WITHOUT ACCESS ALONG PROPERTY LINE
TAKING WITH ACCESS
(P) PERMANENT EASEMENT
(T) TEMPORARY EASEMENT

LEGEND
C&T (P) — CLEARING & TRIMMING
CZ (P) — CLEAR ZONE
CONST. (T) — CONSTRUCTION EASEMENT
SR SR — SLOPE RIGHTS
P L — PROPERTY LINE
TOP OF CUT
TOE OF SLOPE

APPROVED: ROGER P. DUMAS DATE: 11-13-03
AGENT D. PLANS & TITLES

R. O. W. PLANS
POWNAL
BRZ 1441(19) C/2
ROW SHEET 15 OF 18
SHEET 10 OF 108

STATE OF VERMONT
AGENCY OF TRANSPORTATION
RIGHT OF WAY PLANS
DETAIL SHEET

TABLE OF PROJECT PROPERTY ACQUISITION

PARCEL NO.	GRANTOR	SHEET NO.	BEGINNING STATION	ENDING STATION	TAKING	REM.	RIGHTS	TITLE TAKEN	DATE	TOWN OR CITY RECORDED	BK.	PG.	REMARKS
5	BOSTON & MAINE CORPORATION JOINED BY SPRINGFIELD TERMINAL RAILWAY COMPANY	17	TH24 14+09.6 LT. TH24 14+11.0 LT. TH24 14+29.0 LT. TH24 14+39.9 LT. TH24 14+46.33 LT.	TH24 14+97.9 LT. TH24 14+52.0 LT. TH24 14+58.78 LT.			UTILITY (P) 0.07A± INSTALL (P) DRIVE (T) INSTALL (P) REMOVE (T) 2108 S.F.±			POWNAL			GUY & ANCHOR PAVED FENCE REMOVE PAVEMENT
6	LEONARD, STEVEN E. & LINDA J.	18	TH24 16+19.2 RT.	TH24 16+43.1 RT.						POWNAL			EXCEPT & RESERVE PORCH
7	PROUTY, JEAN L. & DONALD E. JR.	17	TH24 9+64.8 RT. TH24 9+73.1 RT. TH24 11+45.8 RT. TH24 10+16.9 RT. TH24 9+79.0 RT. TH24 10+17.0 RT.	TH24 11+70.9 RT. TH24 9+88.4 RT. TH24 11+67.9 RT. TH24 11+58.7 RT. TH24 10+46.0 RT.			CONST. (T) 2436 S.F.± REMOVE (T) CHANNEL (P) 228 S.F.± DITCH (T) 1085 S.F.± DRIVE (T) INSTALL (P)			POWNAL			INCLUDING EROSION CONTROL & PDF CULVERT GRAVEL GUY & ANCHOR
7A		17	TH24 11+44.9 RT.	TH24 11+82.2 RT.			CUL. & DR. (P)						DONATION
8	CENTRAL VERMONT PUBLIC SERVICE CORP.												UTILITY
9	ADELPHIA CABLE COMMUNICATIONS												UTILITY
10	VERIZON NEW ENGLAND, INC.												UTILITY
11	MCI WORLDCOM COMMUNICATIONS, INC.												UTILITY

REVISION NO.	SHEET	DESCRIPTION OF REVISION	DATE	MADE BY	APPROVED BY
11	15,17	PARCEL NO. 1 FOUCHER. CHANGE ENDING STA. OF CONST.(T) TO 8+45.7 LT. REMOVE SR(T) FROM LAYOUT. PER C.O. 9412.	03-15-05	P.J.H.	R.P.D.
12	16,17 18	PARCEL NO. 5 BOSTON & MAINE CORPORATION. DELETE PARCEL 5B. CHANGE AREA OF REMOVE(T) TO 2108 S.F.±. ADD 'JOINED BY SPRINGFIELD TERMINAL RAILWAY COMPANY' TO TITLE. ADD NOTE RELATING PROJECT STATIONING TO RAIL STATIONING. PER C.O. 9413.	03-15-05	P.J.H.	R.P.D.
13	16,18	PARCEL NO. 6 LEONARD. REMOVE DRIVE (T) PER C.O. 9414.	03-15-05	P.J.H.	R.P.D.
14	16,17	PARCEL NO. 5 BOSTON & MAINE CORPORATION. DELETE INSTALL (T) FOR CONCRETE BARRIER. PER C.O. 9416.	03-25-05	M.J.R.	R.P.D.
15	15,16 17,18	PARCEL NO. 2 BISSON. CORRECTED NAME TO BISSON, ALONZO J. PER C.O. 9451	03-20-06	J.A.B.	R.P.D.
16	16,17	PARCEL NO. 7 PROUTY. ADD PARCEL 7A. CUL. & DRAINAGE (P) AT STA. TH 24 11+44.9 RT. ~ 11+82.2 RT. DONATION. PER C.O. 9511.	01-17-08	M.J.R.	H.P.

ACCT.mcassidy
M:\Projects\87e045\RightOfWay\new_re045d.dgn
DATE PLOTTED 08-FEB-2008

DR.(P)- DRAINAGE RIGHT
DIT.(P)- DITCHING RIGHT
CH.(P)- CHANNEL RT.
DRIVE (T)- DRIVE RIGHT
CUL.(P)- CULVERT RIGHT
[W]- WATER SOURCES

PRESENT R.O.W.
TAKING WITHOUT ACCESS
TAKING WITHOUT ACCESS ALONG PROPERTY LINE
TAKING WITH ACCESS
(P) PERMANENT EASEMENT
(T) TEMPORARY EASEMENT

LEGEND
C&T (P) CLEARING & TRIMMING
CZ (P) CLEAR ZONE
CONST.(T) CONSTRUCTION EASEMENT
SR SR SLOPE RIGHTS
P L PROPERTY LINE
TOP OF CUT
TOE OF SLOPE

APPROVED: ROGER P. DUMAS DATE: 11-13-03
AGENT D, PLANS & TITLES

R.O.W. PLANS
POWNAL
BRZ 1441(19) C/2
ROW SHEET 16 OF 18
SHEET 11 OF 108

ALIGNMENT TIES

POB 9+25.00	PC 10+41.29	PT 11+57.80	POE 16+85	CHAN POT 4 + 00	CHAN POT 5 + 40
N = 9839.9110	N = 9942.7725	N = 10043.4819	N = 10297.5316		
E = 50094.8270	E = 50040.5688	E = 50070.7640	E = 50532.7110		
	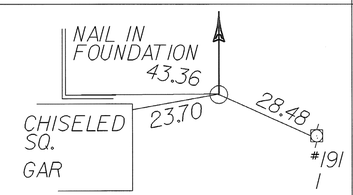	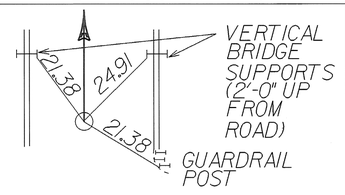	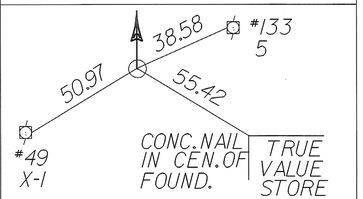	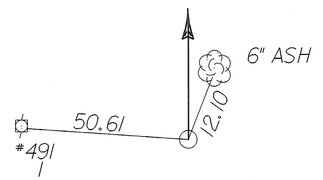	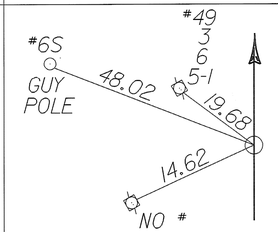
℄ POB 1+00	℄ PC 1+13.78	℄ PT 2+58.75	℄ POE 3+09.90		
N = 10001.6438	N = 10005.6805	N = 10079.3718	N = 10115.3666		
E = 50035.8087	E = 50022.6369	E = 49899.4225	E = 49863.0828		
℄ POB 7+00	℄ PC 8+15.10	℄ PT 8+48.91	℄ POE 8+75		
N = 10034.4700	N = 9950.9864	N = 9924.9630	N = 9903.6621		
E = 49957.5251	E = 49878.2908	E = 49856.7399	E = 49841.4029		

SHEET NAME: TIE SHEET			
PROJECT NAME: POWNAL		HIGHWAY NO.:	TH 24
PROJECT NUMBER: BRZ 1441(19) C/2		BRIDGE NO.:	41
		OVER:	HOOSIC RIVER
FILE NAME: 87e045/str/se045tie.dgn		PLOT DATE:	08-FEB-2008
PROJECT MANAGER: R. WHITCOMB		DRAWN BY:	STRI
DESIGNED BY: C. CARLSON		IPARM NAME:	se045tie.i
		SHEET 12 OF 108	

TH 25 CURVE DATA NO. 1
Δ = 27°41'18" RT
D = 19°05'55"
R = 300'
T = 73.93'
L = 144.98'
E = 8.98
BANK = NORMAL

POE
Sta 3+09.90

TH 25 STA 3+00.00
END SIDELINE CONSTRUCTION

#3 40°
45 cL3
39' ℄
12-D4-21TS
PT
Sta 2+58.75

TH 26 STA 7+00.00 =
TH 25 STA 1+85.14
Δ = 78°15'49"

TH 26 STA 7+12.12
BEGIN SIDELINE APPROACH

STONE FILL TYPE I

PI Sta 8+32.03 BK=
Sta 8+31.98 AH

PT
Sta 8+48.91

TH 26 STA 8+75.00
END SIDELINE CONSTRUCTION

PC
Sta 8+15.10

TH 25 STA 1+12.00
BEGIN SIDELINE CONSTRUCTION

TH 25 STA 1+00=
℣ STA 11+02
Δ = 90°
(TAN. TO CURVE)

END APPROACH
BEGIN PROJECT
STA 10+50

℣ CURVE DATA NO. 1
Δ = 89°
D = 76°23'40"
R = 75'
T = 73.71'
L = 116.50'
E = 30.15
BANK = NORMAL

TH 26 CURVE DATA NO. 1
Δ = 7°44'59"
D = 22°55'06"
R = 250'
T = 16.93'
L = 33.81'
E = 0.57
BANK = NORMAL

BM#1
USC&GS 1935 ELEV 513.92
CHS ON GARAGE FOUNDATION
ON NORTH WEST CORNER

PI
Sta 9+75.14
Δ = 2°30'18" LT
NO CURVE

STONE FILL TYPE I

EXISTING BRIDGE DATA
TWO SIMPLE SPAN THRU TRUSS
BUILT 1939
OVERALL LENGTH 234'
SPAN ONE - 133'
SPAN TWO - 95'
4'-0" SIDEWALK
0'-6" CURB
ROADWAY WIDTH 18'-0"
OUT TO OUT WIDTH 19'-4"
ABUTMENT NO. 1 & PIER ARE CONCRETE ON TIMBER PILES
ABUTMENT NO. 2 IS CONCRETE

TH 25 SNAKE HILL ROAD
EXISTING R.O.W.
EXISTING R.O.W.
FURLONG ROAD
DRIVE #2
DRIVE #1
SAVE 2" CEDAR TREES
WATERY MH
PUMP HOUSE
SEWER MH
POWNAL TANNERY (DEFUNCT.)
#151/49/4
APPROX. LOCATION OF 8" C.I. WATER LINE (DEFUNCT)
APPROXIMATE RELOCATION OF AERIAL UTILITIES
℄ OF EXISTING TEMPORARY BRIDGE
S57°W
335'
HOOSIC RIVER
4x3 STONE BOX CULVERT (RETAIN)
DITCH
RETIRE #49/3/6/5-1
RETIRE 2-STEEL POSTS
PI STA 11+15.00 BK = STA 10+84.10 AH
STONE FILL, TYPE II (TYP) ℄ PIER
PT Sta 11+57.80
BEGIN BRIDGE
P.O.S.T. STA 11+57.62
EXISTING R.O.W.
END BRIDGE STA 13+91.87
DTC/9 H78SPPS PT4/40 Sta 5+46.71
BM#3 USC&GS 1935 ELEV 521.29 PAINT SPOT ON BRIDGE WINGWALL N.W. CORNER
RETIRE #2/45/5
RETIRE
TH 24
SIDEWALK
CONCRETE DRIVE
CONC. WALK
RR SIGNAL
RR SIGNAL
MH
MH
GUY
GUY
CZ
R=30'
R=225'
R=20'
R=50'
R=16'
R=11'
R=5'
R=20' (TYP)
CONC. WALL
GARAGE
GRAVEL DRIVE
GRAVEL DRIVE
ASH
CU #118° 40 Δ 14' ℄ D6-1T
SEWER MH
℄ P.O.S.T. STA 11+47.88
CHAN STA 5+03.49
Δ = 89° 50' 27"
BM#2 USC&GS 1935 ELEV 514.87 CHS ON BRIDGE WINGWALL SOUTH EAST CORNER
1'-0 STONE FILL, TYPE I (TYP)
DETECTABLE WARNING SURFACE
STA. 10+89.65 RT.
STA. 14+24.00 RT.
REMOVAL AND DISPOSAL OF EXISTING GUARDRAIL
STA 11+40 RT - STA 11+57.62 RT
STA 11+44 LT - STA 11+57.62 LT
STA 13+91.62 RT - STA 14+05 RT
STA 13+91.62 LT - STA 14+21LT
REMOVAL AND DISPOSAL OF GUIDE POSTS
℄ TH 25 STA 1+60 RT
℄ TH 25 STA 1+69 RT
℄ TH 25 STA 1+77 RT
℄ TH 26 STA 7+15 LT - 8+55 LT (23 POSTS)
CONSTRUCT DRIVE WITH PAVED APRONS
DRIVE 1 AT TH 25 ℄ STA 2+00 RT
DRIVE 2 AT TH 25 ℄ STA 2+25 RT
STA 10+46 RT
STA 14+39 RT
CAST-IN-PLACE CONCRETE CURB, TYPE B
STA 10+94.00 RT - STA 11+57.62 RT
STA 13+91.87 RT. - STA. 14+20.00 RT
℄ TH 25 1+96.00 RT. - 11+57.62 LT.
BEGIN APPROACH STA 8+75.00
DEMOLITION AND DISPOSAL OF BUILDING STA 10+00 LT
REMOVE EXISTING METAL HAND RAILING
STA 13+91.5 RT- 14+15.5 RT
PORTLAND CEMENT CONCRETE SIDEWALK, 5 INCH
STA 10+94.00 RT - STA 11+57.62 RT
STA 13+91.87 RT - STA 14+28.00 RT
ALUMINUM APPROACH RAILING, ANODIZED
STA 11+01 RT - STA 11+57.87 RT
STA 11+33 LT - STA 11+57.87 LT
STA 13+91.37 LT - WWTF S/L STA 5 + 51 LT
STA 13+91.37 RT - STA 14+29 RT
HD STEEL BEAM GUARDRAIL, GALVANIZED
TH 25 ℄ STA 1+37 LT - TH 26 ℄ STA 8+16 LT
CHAIN-LINK FENCE, 6 FEET
WWTF S/L STA 5+27.8 RT - WWTF S/L STA 6+91.3 RT
#2 40° 50 cL 23' ℄ 12-D4 18
STA 6+50.00
END WWTF SIDELINE CONSTRUCTION
SEE PROJECT NOTES REGARDING CHAIN LINK FENCE AND EXISTING BARRIER
NEW CHAINLINK FENCE
BUILDING
EXISTING PAVEMENT TO BE REMOVED AND TOPSOIL WITH SEED & MULCH PLACED
PI Sta 5+30.73
183° W
RR SIGNAL
BOX
#1 179 50 cL3 12-D2
Sta 5+14.73 43℄
RRU NO#14'
RETIRE
N61°11'28.39"E
15+00
BM#4 USC&GS 1935 ELEV 521.27 CHS ON OLD MILL TANNERY FOUND N.W. CORNER
STA 5+12.00
BEGIN WWTF SIDELINE CONSTRUCTION
℄ STA 5+00.00 =
℄ STA 14+29.00
Δ = 90°
PROPOSED NEW RR SIGNAL W/ FLASHING LIGHTS (SEE PROJECT NOTES)
CHANGE ELEVATION OF SEWER MANHOLE
STA 11+26 LT, STA 14+32 RT
STA 15+06 RT, TH 25 ℄ STA 2+17 LT
ANCHOR FOR STEEL BEAM RAIL
TH 25 ℄ STA 1+43 LT
TH 26 ℄ STA 8+10 LT
BRIDGE RAILING, ANODIZED 3 RAIL ALUMINUM
STA 11+57.87 LT - STA 13+91.37 LT
BRIDGE RAILING, ANODIZED ALUMINUM/PEDESTRIAN
STA 11+57.87 RT - STA 13+91.37 RT
MCI FIBER OPTIC MARKER POST
BOULDERS @ 3' ALONG DRIVE
BOSTON & MAINE CORPORATION
MATCH LINE STA 15+25
MAG 1987
SCALE 1" = 20'-0
20 0 20

NOTE: FOR DRAINAGE DETAILS, SEE SHEET 18A & 18B
FOR SIGNS AND PAVEMENT MARKINGS, SEE SHEETS 19 - 22

SHEET NAME: LAYOUT SHEET NUMBER 1
PROJECT: POWNAL
PROJECT NO.: BRZ144I(19)C/2
DESIGN FILE NAME: 87e045/str/se045bdr.dgn
IPARM FILE NAME: se045lal.i
SURVEYED BY: R. MOREAU
PROJECT MANAGER: R. WHITCOMB
PLOT DATE: 10-MAR-2008
SURVEY DATE: 4/91
DRAWN BY: C. CARLSON/S. MAGNAN
SHEET: 13 OF 108

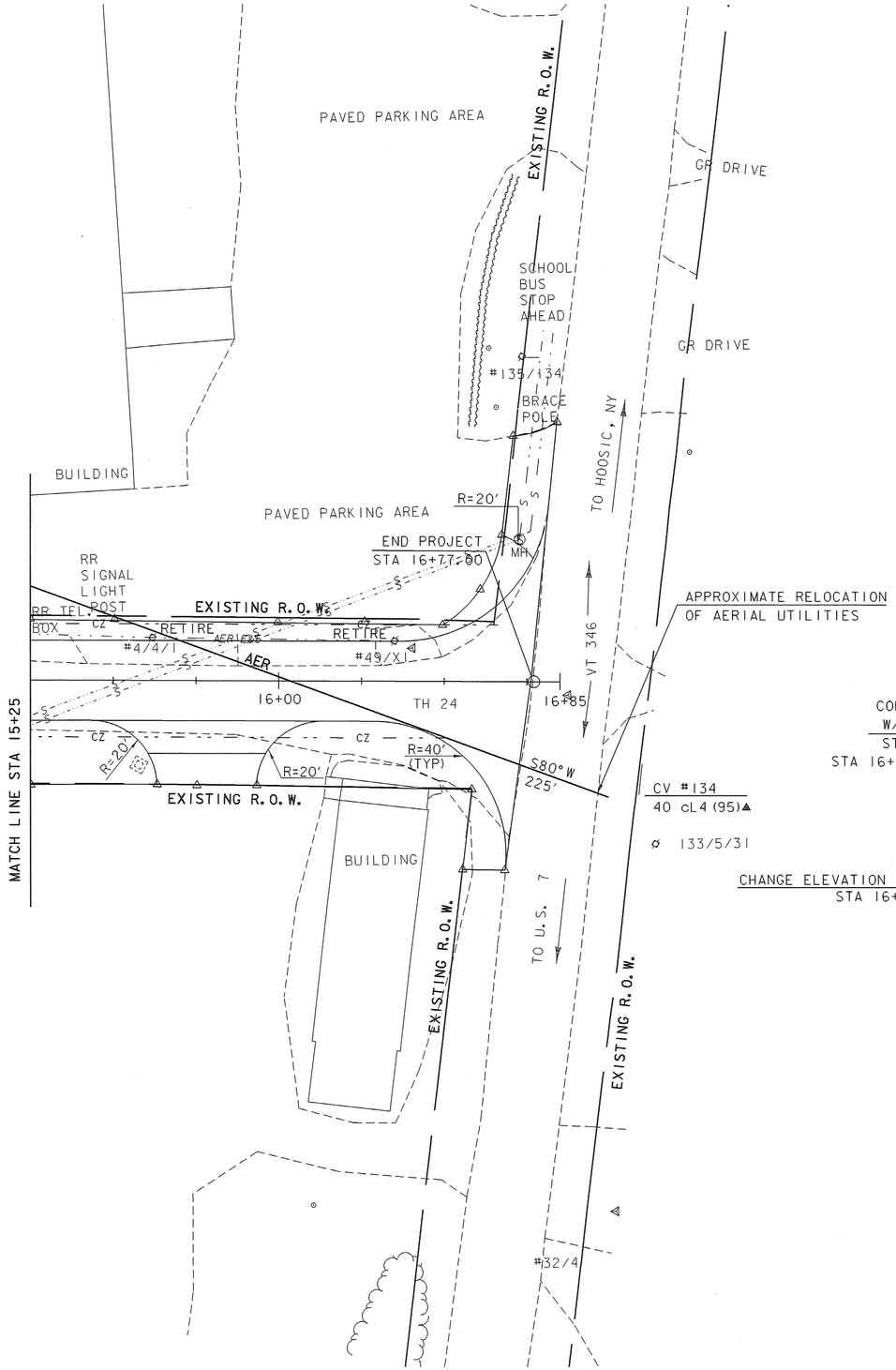

CONSTRUCT DRIVE
W/ PAVED APRONS
STA 15+78.00 RT
STA 16+76, 37' LT - 79' LT

CV #134
40 cL4 (95)▲

☼ 133/5/31

CHANGE ELEVATION OF SEWER MANHOLE
STA 16+73 LT

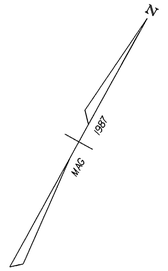

NOTE: FOR SIGNS AND PAVEMENT MARKINGS, SEE SHEETS 19 - 22.

SCALE 1" = 20'-0
20 0 20

SHEET NAME: LAYOUT SHEET NUMBER 2

PROJECT NAME: POWNAL
PROJECT NUMBER: BRZ 1441(19) C/2
HIGHWAY NO.: TH 24
BRIDGE NO.: 41
OVER: HOOSIC RIVER

FILE NAME: 87e045/str/se045bdr.dgn
PROJECT MANAGER: R. WHITCOMB
DESIGNED BY: C. CARLSON
PLOT DATE: 10-MAR-2008
DRAWN BY: CARLSON/MAGNAN
IPARM NAME: se045la2.i
SHEET 14 OF 108

T SHEET NUMBER 1

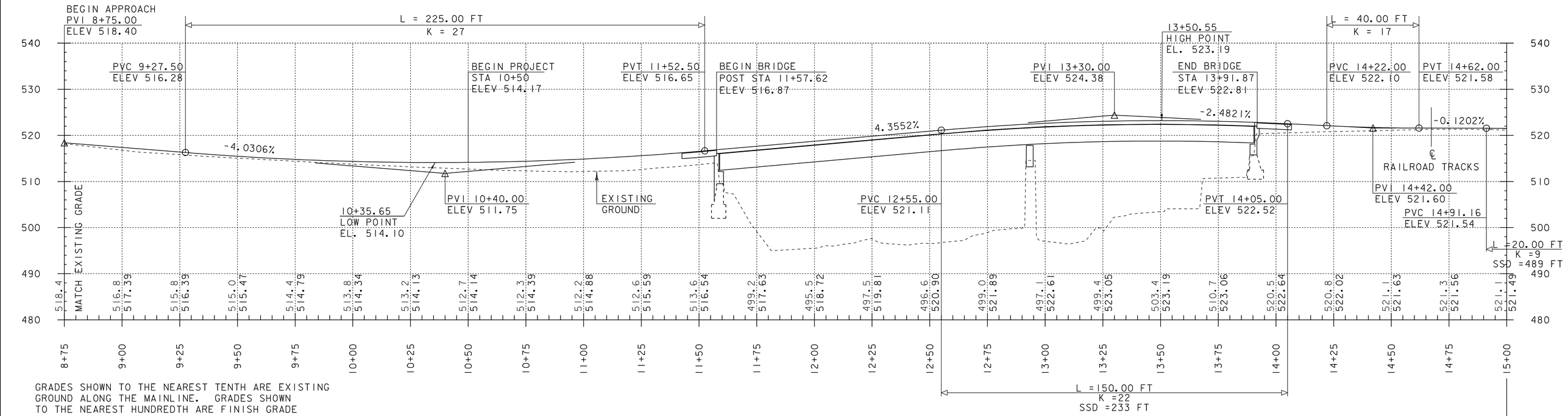

GRADES SHOWN TO THE NEAREST TENTH ARE EXISTING GROUND ALONG THE MAINLINE. GRADES SHOWN TO THE NEAREST HUNDREDTH ARE FINISH GRADE ALONG THE MAINLINE.

MAINLINE PROFILE ⚠5

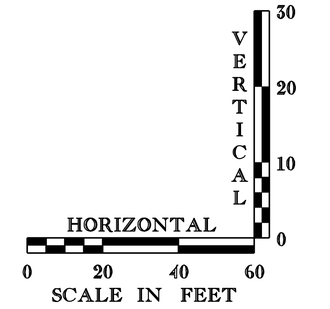

REV.	BY	DATE	DESCRIPTION
⚠5	LBB	10/08/08	REVISED TH 24 PROFILE

SHEET NAME:	MAINLINE PROFILE		
PROJECT NAME:	POWNAL	HIGHWAY NO.:	TH 24
PROJECT NUMBER:	BRZ 1441(19) C/2	BRIDGE NO.:	41
		OVER:	HOOSIC RIVER
FILE NAME: 87e045/str/se045xs3.dgn		PLOT DATE:	23-AUG-2010
PROJECT MANAGER: R. WHITCOMB		DRAWN BY:	J.GILMORE
DESIGNED BY: C. CARLSON		IPARM NAME:	se045prl.i
		SHEET 15	OF 108

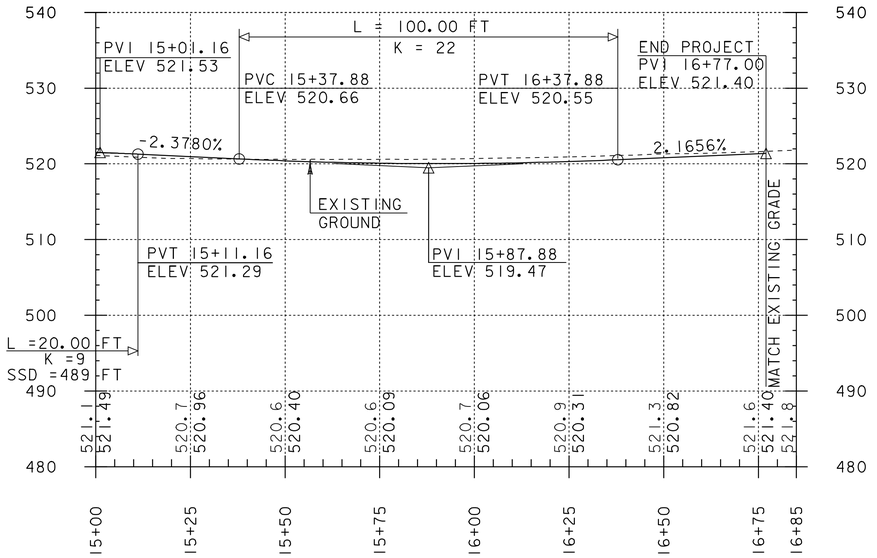

MAINLINE PROFILE (5)

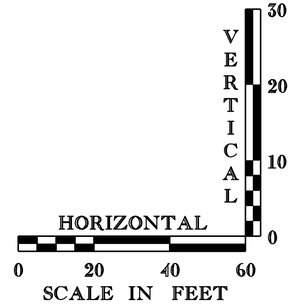

GRADES SHOWN TO THE NEAREST TENTH ARE EXISTING GROUND ALONG THE MAINLINE. GRADES SHOWN TO THE NEAREST HUNDREDTH ARE FINISH GRADE ALONG THE MAINLINE.

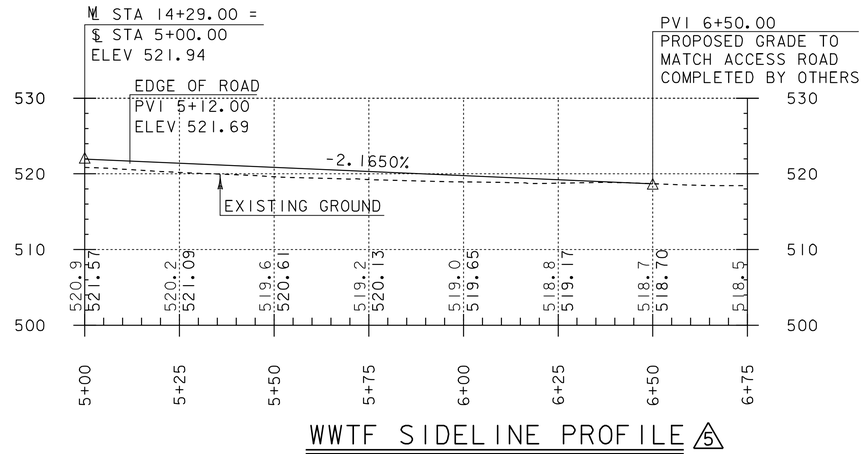

WWTF SIDELINE PROFILE (5)

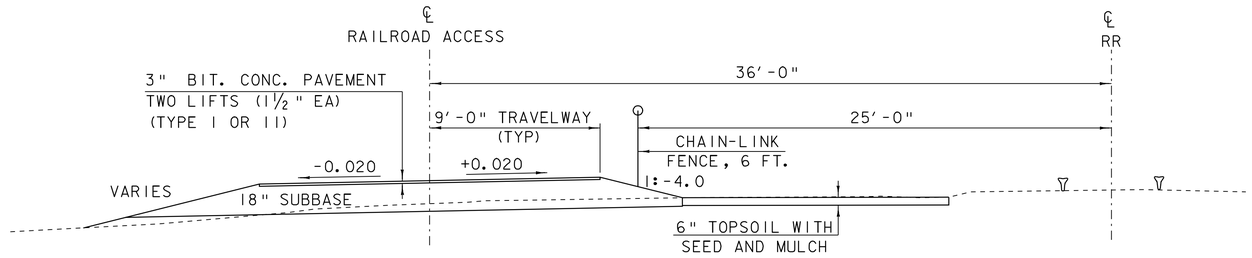

WWTF SIDELINE SECTION

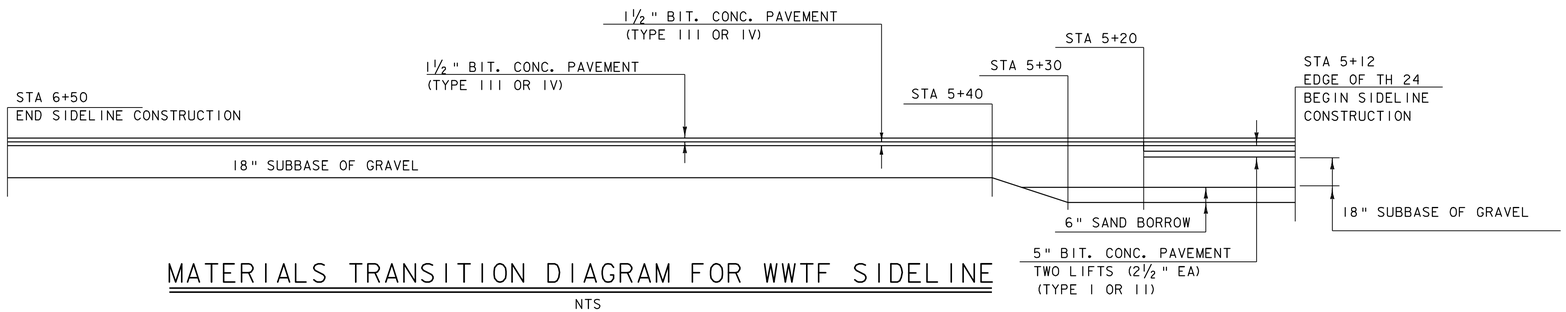

MATERIALS TRANSITION DIAGRAM FOR WWTF SIDELINE

NTS

NOTE:
WWTF = WASTE WATER TREATMENT FACILITY

REV.	BY	DATE	DESCRIPTION
(5)	LBB	10/08/08	REVISED TH 24 & WWTF PROFILE

SHEET NAME: MAINLINE & WWTF SIDELINE PROFILES

PROJECT NAME: POWNAL
PROJECT NUMBER: BRZ 1441(19) C/2
HIGHWAY NO.: TH 24
BRIDGE NO.: 41
OVER: HOOSIC RIVER

FILE NAME: 87e045/str/se045xs3.dgn
PROJECT MANAGER: R. WHITCOMB
DESIGNED BY: C. CARLSON
PLOT DATE: 23-AUG-2010
DRAWN BY: J.GILMORE
IPARM NAME: se045pr2.1
SHEET 16 OF 108

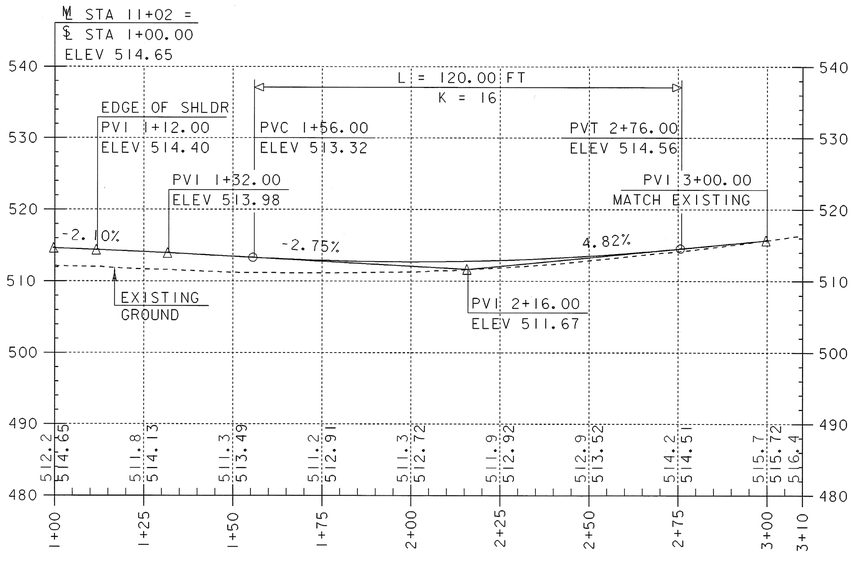

TH 25 PROFILE

GRADES SHOWN TO THE NEAREST TENTH ARE EXISTING GROUND ALONG THE MAINLINE. GRADES SHOWN TO THE NEAREST HUNDREDTH ARE FINISH GRADE ALONG THE MAINLINE.

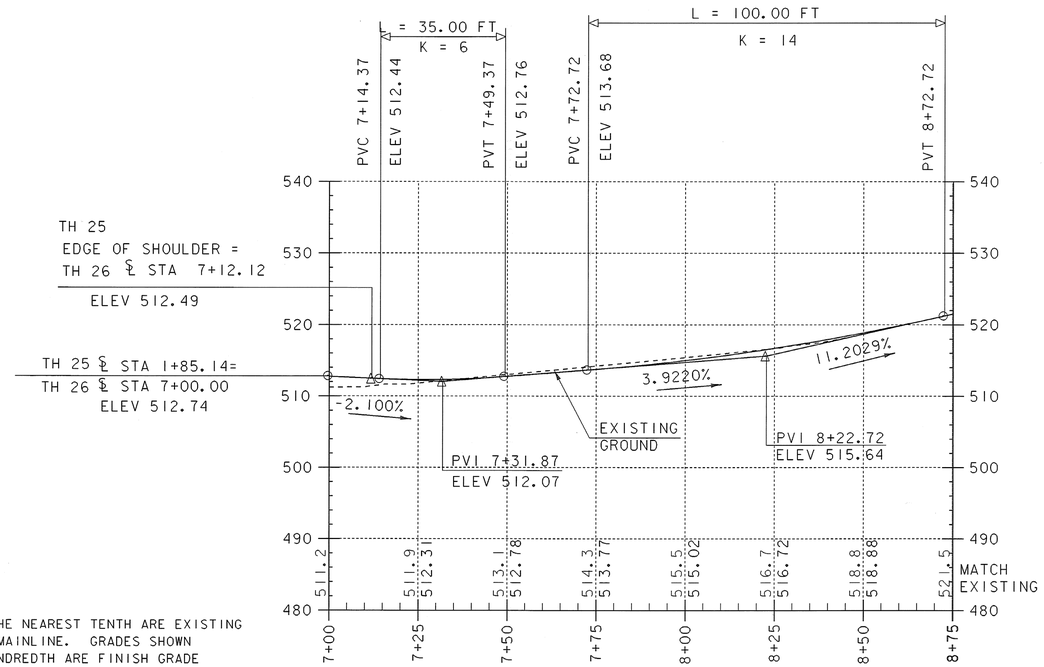

TH 26 PROFILE

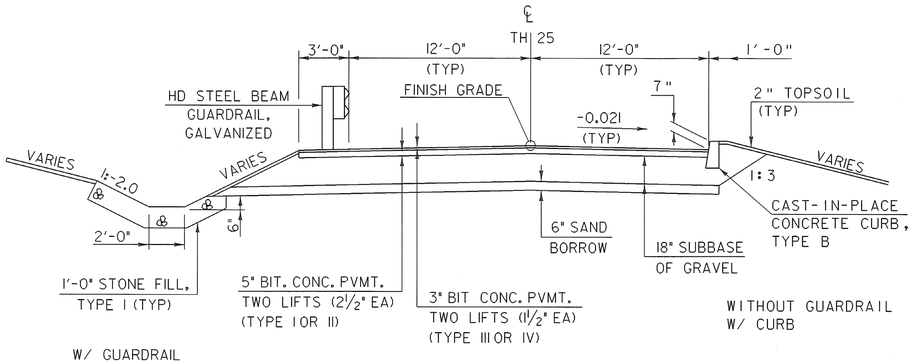

TYPICAL ROADWAY SECTION FOR TH25

SIDELINE TH 25 STA 1+12 - 3+00

NTS

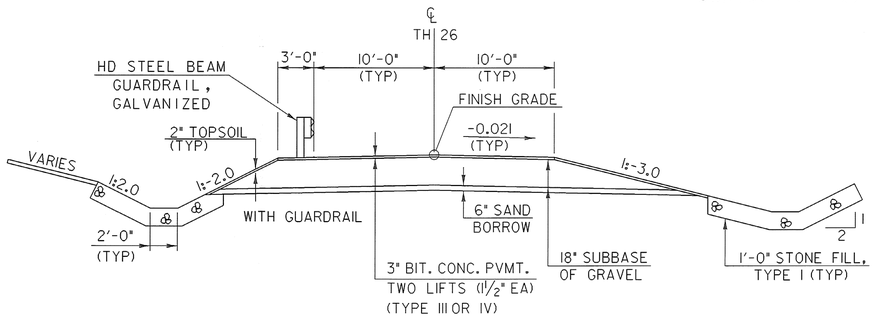

TYPICAL ROADWAY SECTION FOR TH26

SIDELINE TH 26 STA 7+12.12 - STA 8+75

NTS

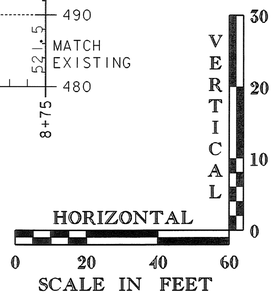

SHEET NAME:	TOWN HIGHWAY 25 AND 26 PROFILES		
PROJECT NAME:	POWNAL	HIGHWAY NO.:	TH 24
PROJECT NUMBER:	BRZ 1441(19) C/2	BRIDGE NO.:	41
		OVER:	HOOSIC RIVER
FILE NAME: 87e045/str/se045xs2.dgn		PLOT DATE:	08-FEB-2008
PROJECT MANAGER: R. WHITCOMB		DRAWN BY:	J.GILMORE
DESIGNED BY: C. CARLSON		IPARM NAME:	se045pr3.i
		SHEET 17 OF 108	

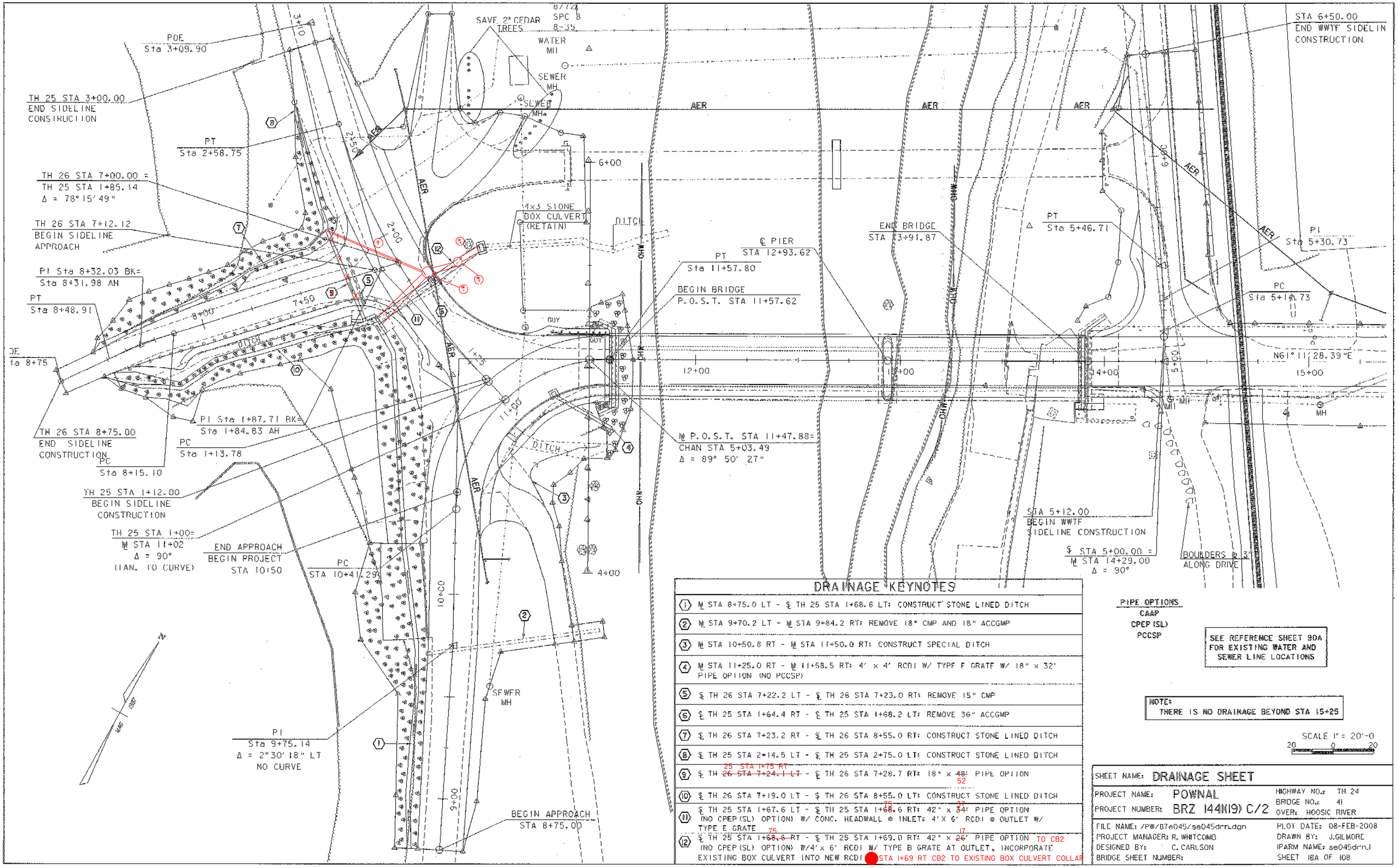

DRAINAGE KEYNOTES

1. ℄ STA 8+75.0 LT - ℄ TH 25 STA 1+68.6 LT: CONSTRUCT STONE LINED DITCH
2. ℄ STA 9+70.2 LT - ℄ STA 9+84.2 RT: REMOVE 18" CMP AND 18" ACCGMP
3. ℄ STA 10+50.8 RT - ℄ STA 11+50.0 RT: CONSTRUCT SPECIAL DITCH
4. ℄ STA 11+25.0 RT - ℄ 11+58.5 RT: 4' x 4' RCDI W/ TYPE F GRATE W/ 18" x 32" PIPE OPTION (NO PCCSP)
5. ℄ TH 26 STA 7+22.2 LT - ℄ TH 26 STA 7+23.0 RT: REMOVE 15" CMP
6. ℄ TH 25 STA 1+64.4 RT - ℄ TH 25 STA 1+68.2 LT: REMOVE 36" ACCGMP
7. ℄ TH 26 STA 7+23.2 RT - ℄ TH 26 STA 8+55.0 RT: CONSTRUCT STONE LINED DITCH
8. ℄ TH 25 STA 2+14.5 LT - ℄ TH 25 STA 2+75.0 LT: CONSTRUCT STONE LINED DITCH
9. ℄ TH ~~26 STA 7+24.1 LT~~ 25 STA 1+75 RT - ℄ TH 26 STA 7+28.7 RT: 18" x ~~48'~~ 52' PIPE OPTION
10. ℄ TH 26 STA 7+19.0 LT - ℄ TH 26 STA 8+55.0 LT: CONSTRUCT STONE LINED DITCH
11. ℄ TH 25 STA 1+67.6 LT - ℄ TH ~~25~~ STA 1+~~68.6~~ 75 RT: 42" x ~~34'~~ 37' PIPE OPTION (NO CPEP(SL) OPTION) W/ CONC. HEADWALL @ INLET: 4' X 6' RCDI @ OUTLET W/ TYPE E GRATE
12. ℄ TH 25 STA 1+~~68.6~~ 75 RT - ℄ TH 25 STA 1+69.0 RT: 42" x ~~26'~~ 17' PIPE OPTION TO CB2 (NO CPEP(SL) OPTION) W/4' x 6' RCDI W/ TYPE B GRATE AT OUTLET. INCORPORATE EXISTING BOX CULVERT INTO NEW RCDI STA 1+69 RT CB2 TO EXISTING BOX CULVERT COLLAR

PIPE OPTIONS
CAAP
CPEP (SL)
PCCSP

SEE REFERENCE SHEET 90A FOR EXISTING WATER AND SEWER LINE LOCATIONS

NOTE:
THERE IS NO DRAINAGE BEYOND STA 15+25

SCALE 1" = 20'-0
20 0 20

SHEET NAME: DRAINAGE SHEET

PROJECT NAME:	POWNAL	HIGHWAY NO.:	TH 24
PROJECT NUMBER:	BRZ 144K(19) C/2	BRIDGE NO.:	41
		OVER:	HOOSIC RIVER
FILE NAME: /PW/07e045/se045drn.dgn		PLOT DATE:	08-FEB-2008
PROJECT MANAGER: R. WHITCOMB		DRAWN BY:	J.GILMORE
DESIGNED BY:	C. CARLSON	IPARM NAME:	se045drn.i
BRIDGE SHEET NUMBER:		SHEET	18A OF 108

STATE OF VERMONT
AGENCY OF TRANSPORTATION

DRAINAGE DETAIL SHEET

STATION	STATION	POS.	ASKEW	INLET/OUTLET TYPE		DITCH		PIPE ARCH			PIPE		ALLOWABLE OPTIONS						PIPE ELBOW	ES	CB	PRCCD	DEPTH DI	HPC CLASS B	REINF STEEL	DI GRATE	CHAN ELEV	CRM	TRENCH EXCAVATION		COMM EXC	UNC CHAN EXC	STRUCT EXCAV	GRAN BKFILL STRUCT	GRAN BORR	EROS MATT	STONE FILL		MARKER POSTS				REMARKS
			NO. DEG.	INLET	OUTLET	IN	OUT	SPAN IN	RISE IN	L FT	D IN	L FT	PCCSP TH	CAAP TH	RCP CL	CSP TH	CPEP SL	PCCSP PI TH	NO. DEG.	EA	EA		FT	B CY	LBS	TYPE	EA	CY	EARTH CY	ROCK CY	CY	CY	CY	CY	CY	SY	CY	TYPE	LT EA	RT EA			
	SL TH 25																																									
ML 8+75.0	1+68.6	LT																																			190.0	I					STONE LNED DITCH
ML 9+70.2	ML 9+84.2	LT/RT																																									REMOVE 18" CMP IN 18" ACCGMP OUT
ML 10+50.8	ML 11+50.0	RT																																									CONSTRUCT SPECIAL DITCH
ML 11+25.0	ML 11+58.5	RT									18	32	X	X			X						4'-0"	2.45	203	E			9.8													4' X 4' RCDI @ INLET
SL TH 26	SL TH 26																																									
7+22.2	7+23.0	LT/RT																																									REMOVE 15" CMP
SL TH 25	SL TH 25																																									
1+64.4	1+68.2	RT/LT																																									REMOVE 36" ACCGMP
SL TH 26	SL TH 26																																									
7+23.2	8+55.0	RT																																			54.0	I					STONE LNED DITCH
SL TH 25	SL TH 25																																									
2+14.5	2+75.0	LT																																			46.0	I					STONE LNED DITCH
SL TH 26	SL TH 26																																									
7+24.1	7+28.7	LT/RT									18	48	X	X			X																											
SL TH 26	SL TH 26																																									
7+19.0	8+55.0	LT																																			54.0	I					STONE LNED DITCH
SL TH 25	SL TH 25																																									
1+67.6	1+68.6	LT/RT									42	34	X	X									7'-0"	4.83	438	E			68.6													4' X 6' RCDI @ OUTLET
																					HEADWALL		15.65	2255								71.5	51.6							CONCRETE HEADWALL @ INLET
SL TH 25	SL TH 25																																									
1+68.6	1+69.0	RT									42	26	X	X									6'-6"	4.2	363	B			4.0													4' X 6' RCDI @ OUTLET INCORPORATE EXISTING STONE BOX INTO NEW RCDI
TOTALS											18"	80 LF	X	X			X																									
											42"	60 LF	X	X									27.13	3259	1-B				82.6				71.5	51.6			344	I			
																									2-E																
ROUNDING																							.87	1					7.4				8.5	8.4			6				
																							28 CY	3260 LBS					90 CY				80 CY	60 CY			350 CY				

PROJECT NAME:	POWNAL
PROJECT NUMBER:	BRZ 1441(19) C/2
FILE NAME:	87e045/se045drn.dgn
PROJECT LEADER:	R.WHITCOMB
DESIGNED BY:	C.CARLSON
DRAINAGE DETAIL SHEET #1	
PLOT DATE:	2/8/2008
DRAWN BY:	C.MOONEY
CHECKED BY:	L. BULLOCK
SHEET	18B OF 108

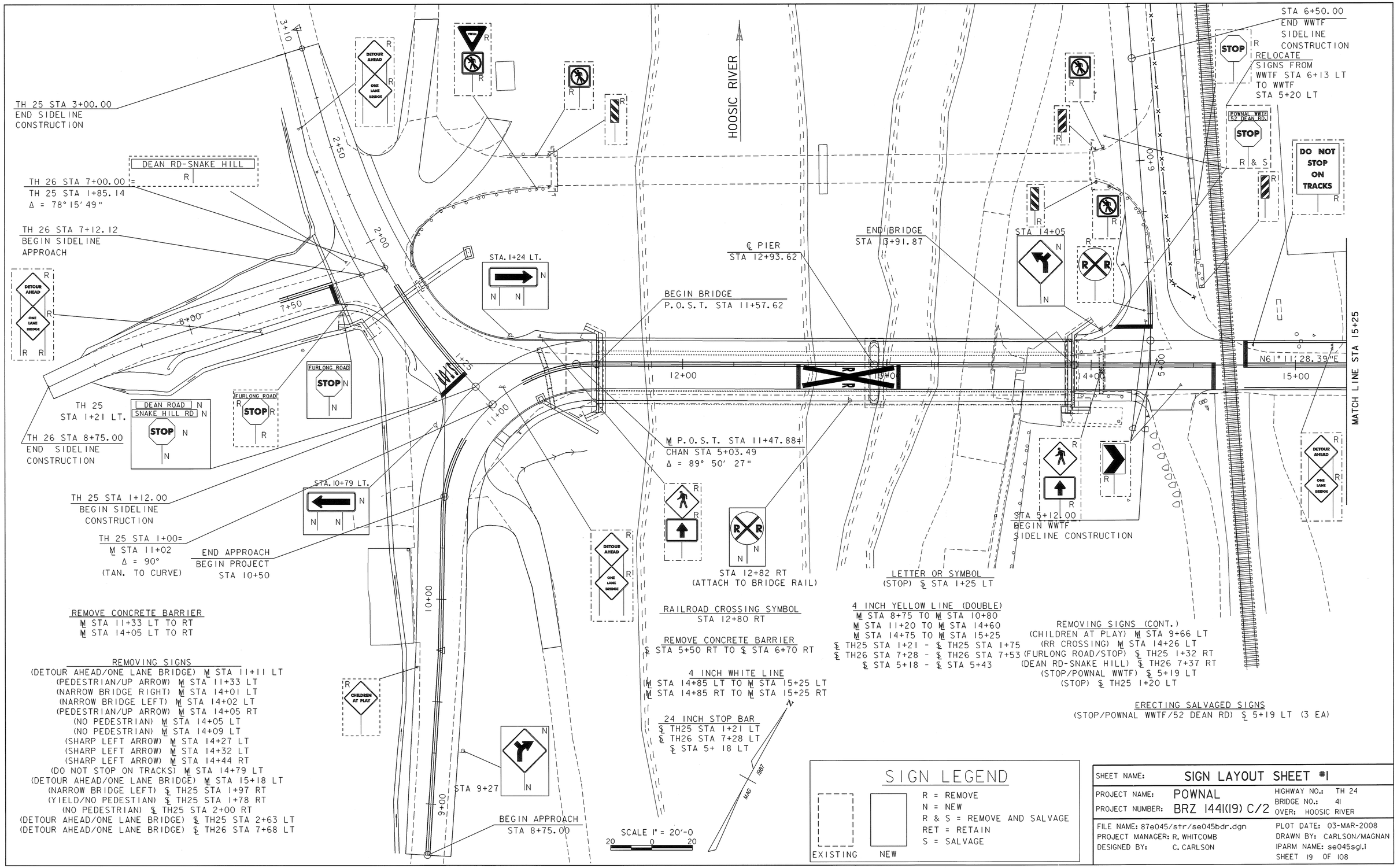

SHEET NAME:	SIGN LAYOUT SHEET #1		
PROJECT NAME:	POWNAL	HIGHWAY NO.:	TH 24
PROJECT NUMBER:	BRZ 1441(19) C/2	BRIDGE NO.:	41
		OVER:	HOOSIC RIVER
FILE NAME: 87e045/str/se045bdr.dgn		PLOT DATE:	03-MAR-2008
PROJECT MANAGER: R. WHITCOMB		DRAWN BY:	CARLSON/MAGNAN
DESIGNED BY: C. CARLSON		IPARM NAME:	se045sgl.i
		SHEET 19 OF 108	

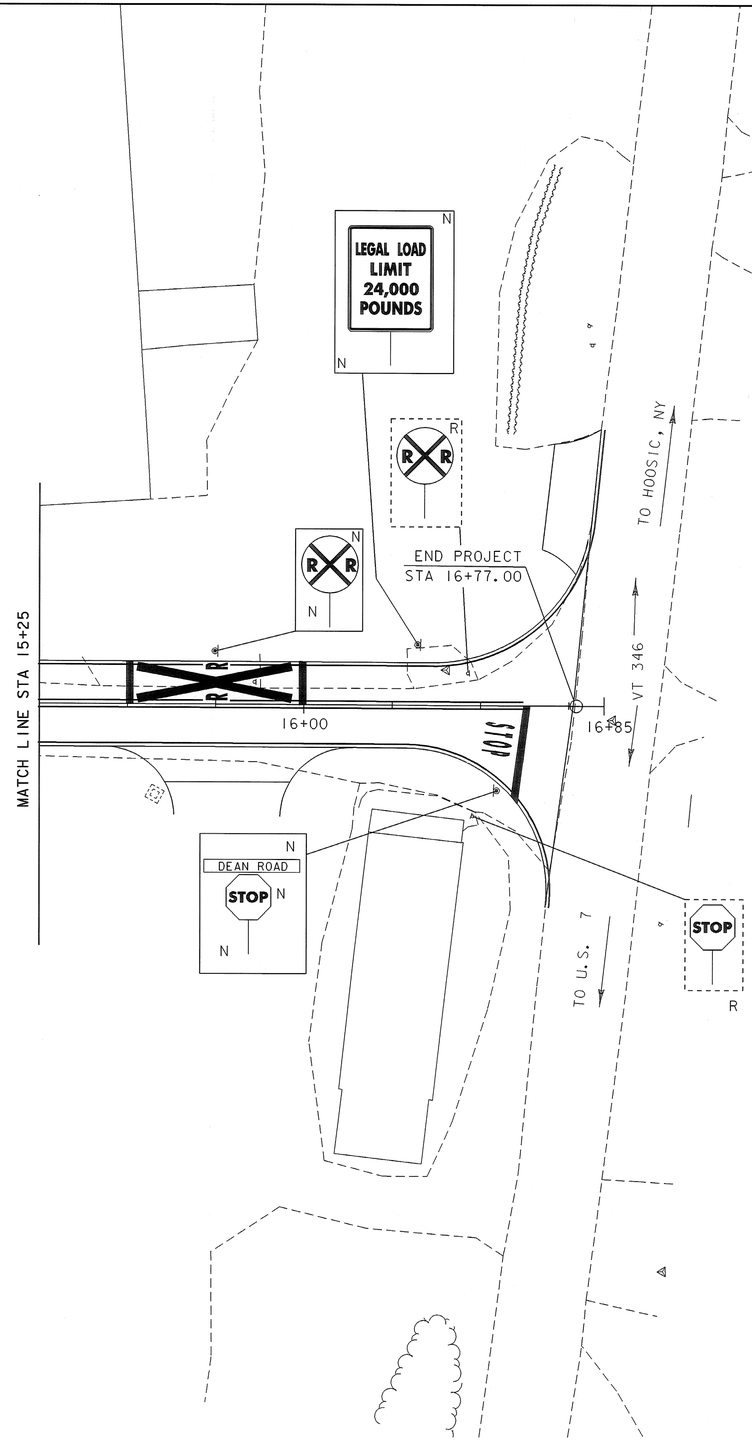

4 INCH WHITE LINE
℄ STA 15+25 LT TO ℄ STA 16+85 O/S 78' LT
℄ STA 15+25 RT TO ℄ STA 16+70 O/S 55' RT

LETTER OR SYMBOL
(STOP) ℄ STA 16+58 RT

24 INCH STOP BAR
℄ STA 16+65 RT

4 INCH YELLOW LINE (DOUBLE)
℄ STA 15+25 TO ℄ STA 16+65

REMOVING SIGNS
(RR CROSSING) ℄ STA 16+49 LT
(STOP) ℄ STA 16+55 RT

RAILROAD CROSSING SYMBOL
℄ STA 15+75 LT

N
MAG 1987

SCALE 1" = 20'-0
20 0 20

SIGN LEGEND

EXISTING NEW

R = REMOVE
N = NEW
R & S = REMOVE AND SALVAGE
RET = RETAIN

SHEET NAME: SIGN LAYOUT SHEET #2

PROJECT NAME: POWNAL
PROJECT NUMBER: BRZ 1441(19) C/2
HIGHWAY NO.: TH 24
BRIDGE NO.: 41
OVER: HOOSIC RIVER

FILE NAME: 87e045/str/se045bdr.dgn
PROJECT MANAGER: R. WHITCOMB
DESIGNED BY: C. CARLSON
PLOT DATE: 10-MAR-2008
DRAWN BY: CARLSON/MAGNAN
IPARM NAME: se045sg2.i
SHEET 20 OF 108

STATE OF VERMONT
AGENCY OF TRANSPORTATION

TRAFFIC SIGN SUMMARY SHEET

MILEMARKER, STATION, OR SIGN NUMBER	SIGN LEGEND	SIGN DIMENSIONS EA	SIGN DIMENSIONS WIDTH (in)	SIGN DIMENSIONS HEIGHT (in)	NEW & SALVAGED SIGNS "A"	NEW & SALVAGED SIGNS "B"	NEW & SALVAGED SIGNS SALV SIGN	NEW & SALVAGED SIGNS SALV TIS	EXIST POST RETAIN	EXIST POST SALVAGE	NEW SIGN POSTS NO. OF POSTS	FLANGED CHANNEL lb/ft 1.12	FLANGED CHANNEL lb/ft 2.0	FLANGED CHANNEL lb/ft 3.0	SQUARE STEEL (in) 1.75 lb/ft 1.88	SQUARE STEEL (in) 2.0 lb/ft 2.16	SQUARE STEEL (in) 2.5 lb/ft 3.35	ANCHOR	SLEEVE	TUBULAR ALUMINUM Ø (in) 3.0 lb/ft 1.3	TUBULAR ALUMINUM Ø (in) 4.0 lb/ft 1.7	TUBULAR ALUMINUM Ø (in) 4.0 MOD lb/ft 1.7	FOUNDATION	TUBULAR STEEL Ø (in) 3.0 lb/ft 7.6	TUBULAR STEEL Ø (in) 3.5 lb/ft 9.0	TUBULAR STEEL Ø (in) 4.0 lb/ft 10.8	TUBULAR STEEL Ø (in) 5.0 lb/ft 14.6	W-SHAPE STEEL FTG. SIZE 24"	W-SHAPE STEEL FTG. SIZE 30"	W-SHAPE STEEL WEIGHT	W-SHAPE STEEL POST SIZE	SIGN FRAME REQUIRED	REMARKS	SIGN DETAIL DETAIL ON SHEET NUMBER	SIGN DETAIL STD. SHEET NUMBER
												OPTION ITEMS																							
ML 9+27 RT		1	30	30	6.25						1		X			X		X															SEE MUTCD W1-10R		
ML 10+79 LT		1	48	24	8.00						2		X			X		X															MUTCD W1-6		E-152
ML 11+24 LT		1	48	24	8.00						2		X			X		X															MUTCD W1-6		E-152
ML 14+05 LT		1	30	30	6.25						1		X			X		X															SEE MUTCD W1-10L		
℄ TH25 1+21 LT.		1	30	30	5.18						1		X			X		X															MUTCD R1-1		E-143
	DEAN ROAD	1	30	9	3.75																												MUTCD D3-1		E-123
	SNAKE HILL RD	1	30	9	3.75																												MUTCD D3-1		E-123

FINAL POST LENGTHS ARE TO BE DETERMINED IN THE FIELD. POST SIZES ARE COMPUTED BASED ON INFORMATION FURNISHED ON THE STANDARD SHEETS AND THE TRAFFIC & SAFETY DIVISION'S "SIGN POST DESIGN GUIDELINE."

											FT	FT	FT	FT	FT	FT		EA	LB	LB	LB		LB	LB	LB	LB								
SUBTOTALS		SF 41.2	SF	EA.	SF						FT SUBTOTALS 105			FT 105					LB			EA.	LB				EA.	EA.	LB					

SHEET NAME: SIGN SUMMARY SHEET #1

PROJECT NAME: POWNAL
PROJECT NUMBER: BRZ 1441(19) C/2
HIGHWAY NO.: TH 24
BRIDGE NO.: 41
OVER: HOOSIC RIVER

FILE NAME: 87e045/str/se045sgn.dgn
PROJECT MANAGER: R. WHITCOMB
DESIGNED BY: C. CARLSON
PLOT DATE: 08-FEB-2008
DRAWN BY: CARLSON/MAGNAN
IPARM NAME: se045sg3.i
SHEET 21 OF 108

STATE OF VERMONT
AGENCY OF TRANSPORTATION

TRAFFIC SIGN SUMMARY SHEET

MILEMARKER, STATION, OR SIGN NUMBER	SIGN LEGEND	SIGN DIMENSIONS EA	WIDTH (in)	HEIGHT (in)	NEW & SALVAGED SIGNS "A"	"B"	SALV SIGN	SALV TIS	EXIST POST RETAIN	EXIST POST SALVAGE	NEW SIGN POSTS NO. OF POSTS	FLANGED CHANNEL lb/ft 1.12	FLANGED CHANNEL lb/ft 2.0	FLANGED CHANNEL lb/ft 3.0	SQUARE STEEL (in) 1.75 lb/ft 1.88	SQUARE STEEL (in) 2.0 lb/ft 2.16	SQUARE STEEL (in) 2.5 lb/ft 3.35	ANCHOR	SLEEVE	TUBULAR ALUMINUM Ø (in) 3.0 lb/ft 1.3	TUBULAR ALUMINUM Ø (in) 4.0 lb/ft 1.7	TUBULAR ALUMINUM Ø (in) 4.0 MOD lb/ft 1.7	FOUNDATION	TUBULAR STEEL Ø (in) 3.0 lb/ft 7.6	TUBULAR STEEL Ø (in) 3.5 lb/ft 9.0	TUBULAR STEEL Ø (in) 4.0 lb/ft 10.8	TUBULAR STEEL Ø (in) 5.0 lb/ft 14.6	W-SHAPE STEEL FTG. SIZE 24"	W-SHAPE STEEL FTG. SIZE 30"	W-SHAPE STEEL WEIGHT	W-SHAPE STEEL POST SIZE	SIGN FRAME REQUIRED	REMARKS	SIGN DETAIL DETAIL ON SHEET NUMBER	SIGN DETAIL STD. SHEET NUMBER
												OPTION ITEMS																									
℄ TH25 1+32 RT	STOP	1	30	30	5.18						1		X			X		X																MUTCD RI-1		E-143
	FURLONG RD																																		
℄ 5+19 LT	STOP						X				1		X			X		X																ERECT THREE SALVAGED SIGNS ON NEW POST		
	POWNAL WWTF						X																												
	52 DEAN RD.						X																												
M STA 12+82 RT	R R	1	36	36	7.12						1		X			X		X																POST ATTACHED TO BRIDGE RAIL MUTCD W10-1		E-190
M STA 15+75 LT	R R	1	36	36	7.12						1		X			X		X																MUTCD W10-1		E-190
M STA 16+32 LT	LEGAL LOAD LIMIT 24,000 POUNDS	1	30	24	5						1		X			X		X																MUTCD VR-017		E-141
M STA 16+53 RT	STOP	1	30	30	5.18						1		X			X		X																MUTCD R1-1		E-143
	DEAN RD.	1	30	9	3.75																													MUTCD D3-1		E-123

FINAL POST LENGTHS ARE TO BE DETERMINED IN THE FIELD. POST SIZES ARE COMPUTED BASED ON INFORMATION FURNISHED ON THE STANDARD SHEETS AND THE TRAFFIC & SAFETY DIVISION'S "SIGN POST DESIGN GUIDELINE."

	SF	SF	EA.	SF
SUBTOTAL (SHT 22)	41.12		3	
SUBTOTAL (SHT 21)	33.35		0	
TOTAL SUBTOTAL	74.47		3	
ROUNDING	0.53		0	
TOTAL	75.00		3	

	FT	FT	FT	FT	FT	FT	EA	LB	LB	LB	LB	LB	LB	LB	EA.	EA.	LB
SUBTOTAL (SHT 22)	90																
SUBTOTAL (SHT 21)	105																
TOTAL SUBTOTAL	195			90													
ROUNDING	5			105				LB			EA.	LB			EA.	EA.	LB
TOTAL	200 FT			195													
				5													
				200 FT													

SHEET NAME: SIGN SUMMARY SHEET #2

PROJECT NAME: POWNAL
PROJECT NUMBER: BRZ 1441(19) C/2
HIGHWAY NO.: TH 24
BRIDGE NO.: 41
OVER: HOOSIC RIVER

FILE NAME: 87e045/str/se045sgn.dgn
PROJECT MANAGER: R. WHITCOMB
DESIGNED BY: C. CARLSON
PLOT DATE: 29-FEB-2008
DRAWN BY: CARLSON/MAGNAN
IPARM NAME: se045sg4.i
SHEET 22 OF 108

SOIL CLASSIFICATION

AASHTO

A1	Gravel and Sand
A3	Fine Sand
A2	Silty or Clayey Gravel and Sand
A4	Silty Soil - Low Compressibility
A5	Silty Soil - Highly Compressible
A6	Clayey Soil - Low Compressibility
A7	Clayey Soil - Highly Compressible

ROCK QUALITY DESIGNATION

R.Q.D. (%)	ROCK DESCRIPTION
<25	Very Poor
25 to 50	Poor
51 to 75	Fair
76 to 90	Good
>90	Excellent

SHEAR STRENGTH

UNDRAINED SHEAR STRENGTH IN P.S.F.	CONSISTENCY
<250	Very Soft
250-500	Soft
500-1000	Med. Stiff
1000-2000	Stiff
2000-4000	Very Stiff
>4000	Hard

CORRELATION GUIDE OF "N" TO DENSITY/CONSISTENCY

DENSITY (GRANULAR SOILS) N	DENSITY (GRANULAR SOILS) DESCRIPTIVE TERM	CONSISTENCY (COHESIVE SOILS) N	CONSISTENCY (COHESIVE SOILS) DESCRIPTIVE TERM
<5	Very Loose	<2	Very Soft
5-10	Loose	2-4	Soft
11-24	Med. Dense	5-8	Med. Stiff
25-50	Dense	9-15	Stiff
>50	Very Dense	16-30	Very Stiff
		31-60	Hard
		>60	Very Hard

COMMONLY USED SYMBOLS

▼	Water Elevation
⊛	Standard Penetration Boring
⊕	Auger Boring
⊙	Rod Sounding
S	Sample
N	Standard Penetration Test Blow Count Per Foot For: 2" O.D. Sampler 1 3/8" I.D. Sampler Hammer Weight Of 140 Lbs. Hammer Fall Of 30"
VS	Field Vane Shear Test
US	Undisturbed Soil Sample
B	Blast
DC	Diamond Core
MD	Mud Drill
WA	Wash Ahead
HSA	Hollow Stem Auger
AX	Core Size 1 1/8"
BX	Core Size 1 5/8"
NX	Core Size 2 1/8"
M	Double Tube Core Barrel Used
LL	Liquid Limit
PL	Plastic Limit
PI	Plasticity Index
NP	Non Plastic
w	Moisture Content (Dry Wgt. Basis)
D	Dry
M	Moist
MTW	Moist To Wet
W	Wet
Sat	Saturated
Bo	Boulder
Gr	Gravel
Sa	Sand
Si	Silt
Cl	Clay
HP	Hardpan
Le	Ledge
NLTD	No Ledge To Depth
CNPF	Can Not Penetrate Further
TLOB	To Ledge Or Boulder
NR	No Recovery
Rec.	Recovery
%Rec.	Percent Recovery
ROD	Rock Quality Designation
CBR	California Bearing Ratio
<	Less Than
>	Greater Than
R	Refusal (N > 100)

COLOR

blk	Black	pnk	Pink
bl	Blue	pu	Purple
brn	Brown	rd	Red
dk	Dark	tn	Tan
gry	Gray	wh	White
gn	Green	yel	Yellow
lt	Light	mltc	Multicolored
or	Orange		

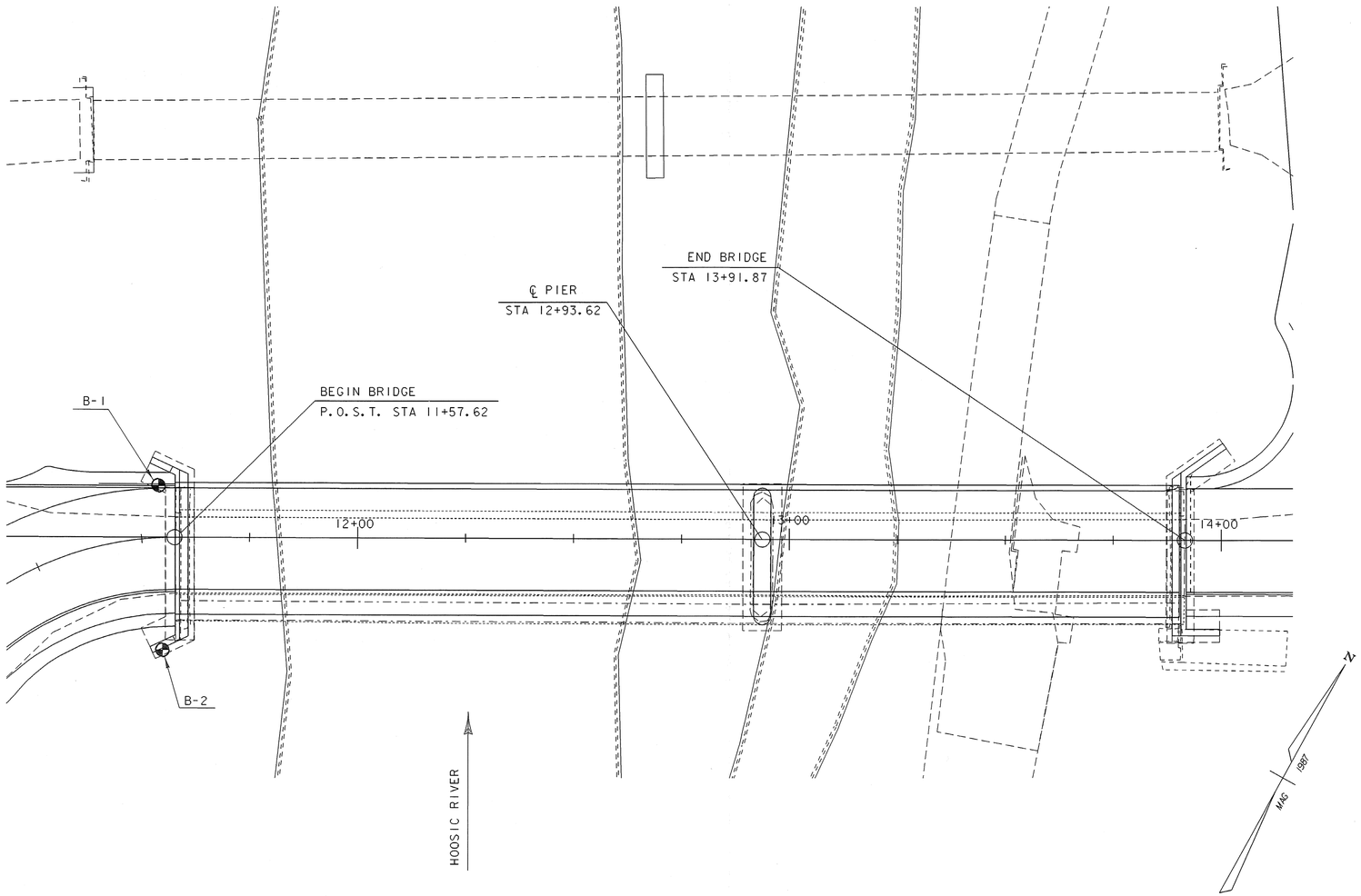

STANDARD PENETRATION BORINGS

SCALE 1" = 20'-0

20 0 20

DEFINITIONS (AASHTO)

BEDROCK (LEDGE) - Rock in its native location of indefinite thickness.

BOULDER - A rock fragment with an average dimension > 12 inches.

COBBLE - Rock fragments with an average dimension between 3 and 12 inches.

GRAVEL - Rounded particles of rock < 3" and > 0.0787" (#10 sieve).

SAND - Particles of rock < 0.0787" (#10 sieve) and > 0.0029" (#200 sieve).

SILT - Soil< 0.0029" (#200 sieve), non or slightly plastic and exhibits no strength when air-dried.

CLAY - Fine grained soil, exhibits plasticity when moist and considerable strength when air-dried.

VARVED - Alternate layers of silt and clay.

HARDPAN - Extremely dense soil, cemented layer, not softened when wet.

MUCK - Soft organic soil (containing > 10% organic material.

MOISTURE CONTENT - Weight of water divided by dry weight of soil.

FLOWING SAND - Granular soil so saturated (loose) that it flows into drill casing during extraction of wash rod.

STRIKE - Angle from magnetic north to line of intersection of bed with a horizontal plane.

DIP - Inclination of bed with a horizontal plane.

GENERAL NOTES

1. The subsurface explorations shown herein were made between March 31, 1998 and April 13, 1998 by the Agency.
2. Soil and rock classifications, properties and descriptions are based on engineering interpretation from available subsurface information by the Agency and may not necessarily reflect actual variations in subsurface conditions that may be encountered between individual boring or sample locations.
3. Observed water levels and/or conditions indicated are as recorded at the time of exploration and may vary according to the prevailing rainfall, methods of exploration and other factors.
4. Engineering judgement was exercised in preparing the subsurface information presented herein. Analysis and interpretation of subsurface data was performed and interpreted for Agency design and estimating purposes. Presentation of the information in the Contract is intended to provide the Contractor access to the same data available to the Agency. The subsurface information is presented in good faith and is not intended as a substitute for personal investigation, independent interpretation, independent analysis or judgement by the Contractor.
5. Pictorial structure details shown on the boring plan layout or soils profile are for illustrative purposes only and may not accurately portray final contract details.
6. Terminology used on boring logs to describe the hardness, degree of weathering, and spacing of fractures, joints and other discontinuities in the bedrock is defined in the AASHTO Manual on Subsurface Investigations, 1988.

BORING CHART

HOLE NO.	STATION	OFFSET	GROUND ELEV.
B-1	11+54.00	16.00 LT	513.23
B-2	11+55.00	22.00 RT	513.69

SHEET NAME: BORING LAYOUT SHEET

PROJECT NAME: POWNAL
PROJECT NUMBER: BRZ 1441(19) C/2
HIGHWAY NO.: TH 24
BRIDGE NO.: 41
OVER: HOOSIC RIVER

FILE NAME: /87e045/str/se045bor.dgn
PROJECT MANAGER: R. WHITCOMB
DESIGNED BY: C. CARLSON
PLOT DATE: 08-FEB-2008
DRAWN BY: J.GILMORE
IPARM NAME: se045brl.i
SHEET 23 OF 108

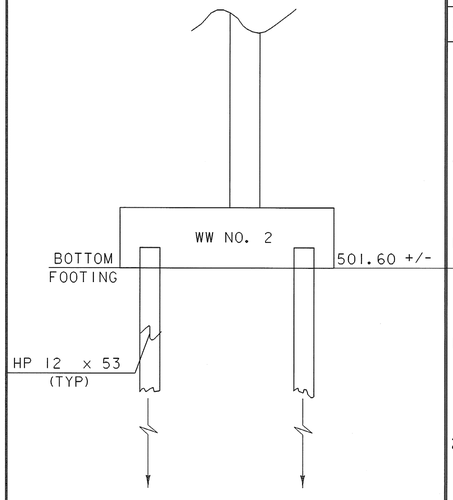

STATE OF VERMONT
AGENCY OF TRANSPORTATION
MATERIALS & RESEARCH DIVISION
SUBSURFACE INFORMATION

HOLE NO.: B-1
SHEET 1 OF 3
DATE STARTED: 4/7/98
DATE COMPLETED: 4/13/98

PROJECT NAME: POWNAL
SITE NAME: BR-41
STATION: 11+54.00
GROUND EL.: 513.23

PROJECT NUMBER: BRZ 1441(19)
SITE NO.: TH #24
OFFSET: -16.00
G.W. DEPTH:

BORING CREW
CREW CHIEF: MCGLYNN
DRILLER: CHABOT E J
LOGGER:

BORING RIG: TRUCK
BORING TYPE: WASH BORE
SAMPLE TYPE: SPLIT BARREL/VANE SHEAR

DEPTH	SYMBOL	CLASSIFICATION OF MATERIALS (Description)	BLOWS PER FOOT	M.C. %	GRAVEL %	SAND %	FINES %	LL	PI
5		A-1-b, GrSa, brn., Dry, Rec. = 0.8'	23	8.6	42.5	46.2	12.3		
10		A-1-a, Gr, gry/brn., Moist, Rec. = 0.3'	19	12.2	83.3	15.4	1.3		
15		A-1-b, GrSa, brn., MTW, Rec. = 0.7'	8	20.8	38.5	43.6	17.9		
20		A-1-a, SaGr, Lt/gry, Dry, Rec. = 1.1'	64	9.9	57	30.5	12.5		
25		A-4, SaClSi (visual), gry, MTW, Rec. = 1.3'	11	33		46.4	53.6		
		A-4, ClSi, gry, MTW, VS Sample		33.9		0.5	99.5	35	10
30		A-4, ClSi (visual), gry, MTW, Rec. = 1.5'	14	32.2		5.4	94.6		
		A-4, ClSi, gry, MTW, VS Sample		30.1		5.6	94.4	33	10
35		A-4, Si, gry, MTW, Rec. = 0.9'	15	24.7		12.4	87.6		
		A-4, SaSi, gry, MTW, VS Sample		21.8	0.3	23.5	76.2	25	6
40		A-4, ClSi (visual), gry, Moist, Rec. = 1.4'	20	19		25.9	74.1		
		43.6'-44.0' VS= 1670/540 psf							
45		A-7-6, SiCl, gry, MTW, Rec. = 2.0'	5	37.6		1	99	41	15
		48.6'-49.0' VS= 2003/700 psf							

STATE OF VERMONT
AGENCY OF TRANSPORTATION
MATERIALS & RESEARCH DIVISION
SUBSURFACE INFORMATION

HOLE NO.: B-1
SHEET 2 OF 3
DATE STARTED: 4/7/98
DATE COMPLETED: 4/13/98

PROJECT NAME: POWNAL
SITE NAME: BR-41
STATION: 11+54.00
GROUND EL.: 513.23

PROJECT NUMBER: BRZ 1441(19)
SITE NO.: TH #24
OFFSET: -16.00
G.W. DEPTH:

BORING CREW
CREW CHIEF: MCGLYNN
DRILLER: CHABOT E J
LOGGER:

BORING RIG: TRUCK
BORING TYPE: WASH BORE
SAMPLE TYPE: SPLIT BARREL/VANE SHEAR

DEPTH	SYMBOL	CLASSIFICATION OF MATERIALS (Description)	BLOWS PER FOOT	M.C. %	GRAVEL %	SAND %	FINES %	LL	PI
50		A-7-6, SiCl (visual), gry, MTW, Rec. = 1.7'	5	42.6		1.4	98.6		
		53.6'-54.0' VS= 1675/505 psf							
55		A-7-6, SiCl, gry, MTW, Rec. = 2.0'	6	41.5		0.3	99.7	42	16
		58.6'-59.0' VS= 1668/435 psf							
60		A-7-6, SiCl, gry, MTW, Rec. = 2.0'	3	42.7			100		
		63.6'-64.0' VS= 1665/400 psf							
65		A-7-6, SiCl, gry, MTW, Rec. = 2.0'	3	44.1			100	45	17
		68.6'-69.0' VS= 1675/410 psf							
70		A-6, SiCl (visual), gry, MTW, Rec. = 2.0'	5	46.3			100		
		73.6'-74.0' VS= 2000/640 psf							
75		A-6, SiCl, gry, MTW, Rec. = 2.0'	2	45.5			100	39	11
		78.6'-79.0' VS= 2995/1000 psf							
80		A-6, SiCl (visual), gry, MTW, Rec. = 2.0'	6	41.8			100		
		83.6'-84.0' VS= 3003/1000 psf							
85		A-4, ClSi, gry, MTW, Rec. = 1.9'	5	43.3			100	38	8
		88.6'-89.0' VS= 3020/1285 psf							
90		A-4, ClSi (visual), gry, MTW, Rec. = 2.0'	6	35.3			100		
		93.6'-94.0' VS= 3030/1285 psf							
95		A-4, Si, gry, MTW, Rec. = 2.0'	5	37.1			100		

ESTIMATED
PILE TIP
ELEV. 411.93

STATE OF VERMONT
AGENCY OF TRANSPORTATION
MATERIALS & RESEARCH DIVISION
SUBSURFACE INFORMATION

HOLE NO.: B-1
SHEET 3 OF 3
DATE STARTED: 4/7/98
DATE COMPLETED: 4/13/98

PROJECT NAME: POWNAL
SITE NAME: BR-41
STATION: 11+54.00
GROUND EL.: 513.23

PROJECT NUMBER: BRZ 1441(19)
SITE NO.: TH #24
OFFSET: -16.00
G.W. DEPTH:

BORING CREW
CREW CHIEF: MCGLYNN
DRILLER: CHABOT E J
LOGGER:

BORING RIG: TRUCK
BORING TYPE: WASH BORE
SAMPLE TYPE: SPLIT BARREL/VANE SHEAR

DEPTH	SYMBOL	CLASSIFICATION OF MATERIALS (Description)	BLOWS PER FOOT	M.C. %	GRAVEL %	SAND %	FINES %	LL	PI
100		Top of bedrock @ 101.3'							
		Run#1: BXMDC, 101.3'-104.4', Rec. = 2.3', See Geologist's Report.	RUN 1	REC% 74	RQD% 74	Dip° 40			
105		Run#2: BXMDC, 104.4'-108.3', Rec. = 3.1', See Geologist's Report.	2	79	79	40			
		Run#3: BXMDC, 108.3'-111.3', Rec. = 2.4', See Geologist's Report.	3	80	80	40			
110		Hole stopped @ 111.3'							

Geologist's Report

Run#1: Gray Phyllitic schist. Moderately hard. Unweathered. Competent.
Note: Moderate recovery due to damaged bit. Cored through piece of metal left behind by vane shear test.

Run#2: Green to gray silceous schist. Hard. Unweathered. Competent.

Run#3: Green to gray silceous schist. Hard. Unweathered. Competent.

Note For All Runs: Core box dropped and contents spilled out. Only definative info. are run depths, recovery and lithogic descriptions.

115 120 125 130 135 140 145

SHEET NAME:	BORING LOG SHEET #1
PROJECT NAME:	POWNAL
PROJECT NUMBER:	BRZ 1441(19) C/2
HIGHWAY NO.:	TH 24
BRIDGE NO.:	41
OVER:	HOOSIC RIVER
FILE NAME:	/87e045/str/se045bor.dgn
SQUAD LEADER:	C.C. BENDA
DATE:	MAY 1998
PLOT DATE:	08-FEB-2008
DRAWN BY:	J.TOUCHETTE
IPARM NAME:	se045br2.i
SHEET	24 OF 108

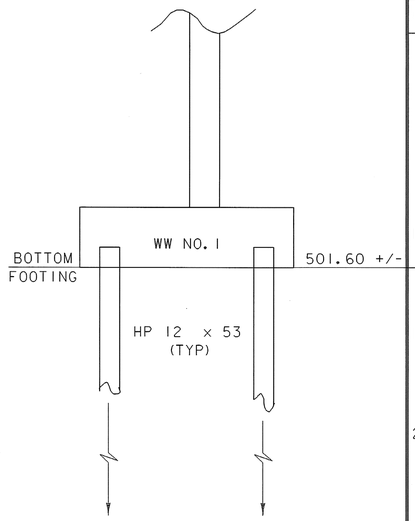

STATE OF VERMONT
AGENCY OF TRANSPORTATION
MATERIALS & RESEARCH DIVISION
SUBSURFACE INFORMATION

HOLE NO.: B-2
SHEET 1 OF 3
DATE STARTED: 3/31/98
DATE COMPLETED: 4/3/98

PROJECT NAME: POWNAL
SITE NAME: BR-41
STATION: 11+55.00
GROUND EL.: 513.69

PROJECT NUMBER: BRZ 1441(19)
SITE NO.: TH #24
OFFSET: 22.00
G.W. DEPTH:

BORING CREW
CREW CHIEF: MCGLYNN
DRILLER: CHABOT E J
LOGGER:

BORING RIG: TRUCK
BORING TYPE: WASH BORE
SAMPLE TYPE: SPLIT BARREL

DEPTH	SYMBOL	CLASSIFICATION OF MATERIALS (Description)	BLOWS PER FOOT	M.C. %	GRAVEL %	SAND %	FINES %	LL	PI
		A-1-b, SaGr, brn, Dry, Rec. = 0.6′	10	9.5	48.5	40.4	11.1		
5		A-1-a, SaGr, brn, Moist, Rec. = 0.8′	10	11.8	50.2	40	9.8		
		No Rec.	14						
		A-1-b, SaGr, brn, MTW, Rec. = 0.6′	12	21.1	45.2	40	14.8		
10		A-2-4, GrSiSa, brn, MTW, Rec. = 0.8′	7	20.5	27	41.3	31.7		
		No Rec., Boulders (BXDC, 13.0′-15.0′							
15		A-1-b, Sa w/broken stone, brn, MTW, Rec.= 0.8′	21	20.9	17.2	65.1	17.7		
		A-1-a, SaGr w/broken stone, brn, Moist, Rec. = 0.8′	21	14.5	58.2	33.2	8.6		
20		Broken Rock, Moist Rec. = 0.7′	33	19.7					
		A-4, Si, gry, MTW, Rec. = 1.0′	18	32.9	4.9	4.7	90.4		
25		A-6, SiCl, gry, MTW, Rec. = 2.0′	7	32.7	0.3	6.6	93.1	36	13
		A-6, SiCl (visual), gry, MTW, Rec. = 1.5′	8	31.6		1.6	98.4		
		A-4, Si, gry, MTW, Rec. = 2.0′	16	29		4.7	95.3		
30		A-4, ClSi (visual), gry, MTW, Rec. = 1.5′	8	28	0.4	9.7	89.9		
		A-4, ClSi, gry, MTW, Rec. = 2.0′	13	26.5	0.8	16.8	82.4	30	10
		A-4, ClSi (visual), gry, MTW, Rec. = 2.0′	10	24	1	18.1	80.9		
35		A-4, ClSi, gry, MTW, Rec. = 1.6′	16	21.3	1.2	19.7	79.1	27	9
		A-4, ClSi (visual), gry, MTW, Rec. = 2.0′	12	43.4	4	18.6	77.4		
40		A-4, ClSi, gry, MTW, Rec. = 2.0′	16	28.1	1.6	19.9	78.5	28	10
45		A-6, SiCl (visual), gry, MTW, Rec. = 2.0′	7	42.9		9.6	90.4		



STATE OF VERMONT
AGENCY OF TRANSPORTATION
MATERIALS & RESEARCH DIVISION
SUBSURFACE INFORMATION

HOLE NO.: B-2
SHEET 2 OF 3
DATE STARTED: 3/31/98
DATE COMPLETED: 4/3/98

PROJECT NAME: POWNAL
SITE NAME: BR-41
STATION: 11+55.00
GROUND EL.: 513.69

PROJECT NUMBER: BRZ 1441(19)
SITE NO.: TH #24
OFFSET: 22.00
G.W. DEPTH:

BORING CREW
CREW CHIEF: MCGLYNN
DRILLER: CHABOT E J
LOGGER:

BORING RIG: TRUCK
BORING TYPE: WASH BORE
SAMPLE TYPE: SPLIT BARREL

DEPTH	SYMBOL	CLASSIFICATION OF MATERIALS (Description)	BLOWS PER FOOT	M.C. %	GRAVEL %	SAND %	FINES %	LL	PI
50		A-6, SiCl, gry, MTW, Rec. = 1.7′	9	31.6		5.4	94.6	36	12
55		A-7-6, SiCl (visual), gry, MTW, Rec. = 2.0′	7	44		3.6	96.4		
60		A-7-6, SiCl, gry, MTW, Rec. = 2.0′	WH	44.8		0.4	99.6	46	17
65		A-7-6, SiCl (visual), gry, MTW, Rec. = 2.0′	5	45.5		2.1	97.9		
70		A-7-6, SiCl, gry, MTW, Rec. = 1.1′	4	49.3			100	44	15
75		A-4, ClSi (visual), gry, MTW, Rec. = 2.0′	5	42.9			100		
80		A-4, Si, gry, MTW, Rec. = 2.0′	5	43.1			100		
85		A-4, Si (visual), gry, MTW, Rec. = 2.0′	8	36.4			100		
90		A-4, Si, gry, MTW, Rec. = 1.4′	5	34.8			100		
95		A-4, Si, gry, MTW, Rec. = 1.1′	7	29.7			100		
		Run#1: BXMDC, 97.4′-100.0′ Rec. = 1.9′ See Geologist's Report.	Top of bedrock @ 97.4′ See next page for Run#1 results						

STATE OF VERMONT
AGENCY OF TRANSPORTATION
MATERIALS & RESEARCH DIVISION
SUBSURFACE INFORMATION

HOLE NO.: B-2
SHEET 3 OF 3
DATE STARTED: 3/31/98
DATE COMPLETED: 4/3/98

PROJECT NAME: POWNAL
SITE NAME: BR-41
STATION: 11+55.00
GROUND EL.: 513.69

PROJECT NUMBER: BRZ 1441(19)
SITE NO.: TH #24
OFFSET: 22.00
G.W. DEPTH:

BORING CREW
CREW CHIEF: MCGLYNN
DRILLER: CHABOT E J
LOGGER:

BORING RIG: TRUCK
BORING TYPE: WASH BORE
SAMPLE TYPE: SPLIT BARREL

DEPTH	SYMBOL	CLASSIFICATION OF MATERIALS (Description)	BLOWS PER FOOT	M.C. %	GRAVEL %	SAND %	FINES %	LL	PI
			RUN	REC%	RQD%	Dip°			
100		Run#2: BXMDC, 100.0′-104.3′, Rec. = 3.9′, See Geologist's Report.	1	73	73	40			
			2	91	91	40			
105		Run#3: BXMDC, 104.3′-108.0′, Rec. = 3.1′, See Geologist's Report.	3	84	84	40			
		Hole stopped @ 108.0′							
110		Geologist's Report							
		Run#1: Green to gray siliceous schist. Hard. Unweathered. Competent.							
115		Run#2: Green to gray siliceous schist. Hard. Unweathered. Competent.							
		Run#3: Green to gray siliceous schist. Hard. Unweathered. Competent.							
120		Note For All Runs: Core box dropped and contents spilled out. Only definative info. are run depths, recovery and lithogic descriptions.							
125									
130									
135									
140									
145									

SHEET NAME: BORING LOG SHEET #2

PROJECT NAME: POWNAL
PROJECT NUMBER: BRZ 1441(19) C/2

HIGHWAY NO.: TH 24
BRIDGE NO.: 41
OVER: HOOSIC RIVER

FILE NAME: /87e045/str/se045bor.dgn
SQUAD LEADER: C.C. BENDA
DATE: MAY 1998

PLOT DATE: 08-FEB-2008
DRAWN BY: J.TOUCHETTE
IPARM NAME: se045br3.i
SHEET 25 OF 108

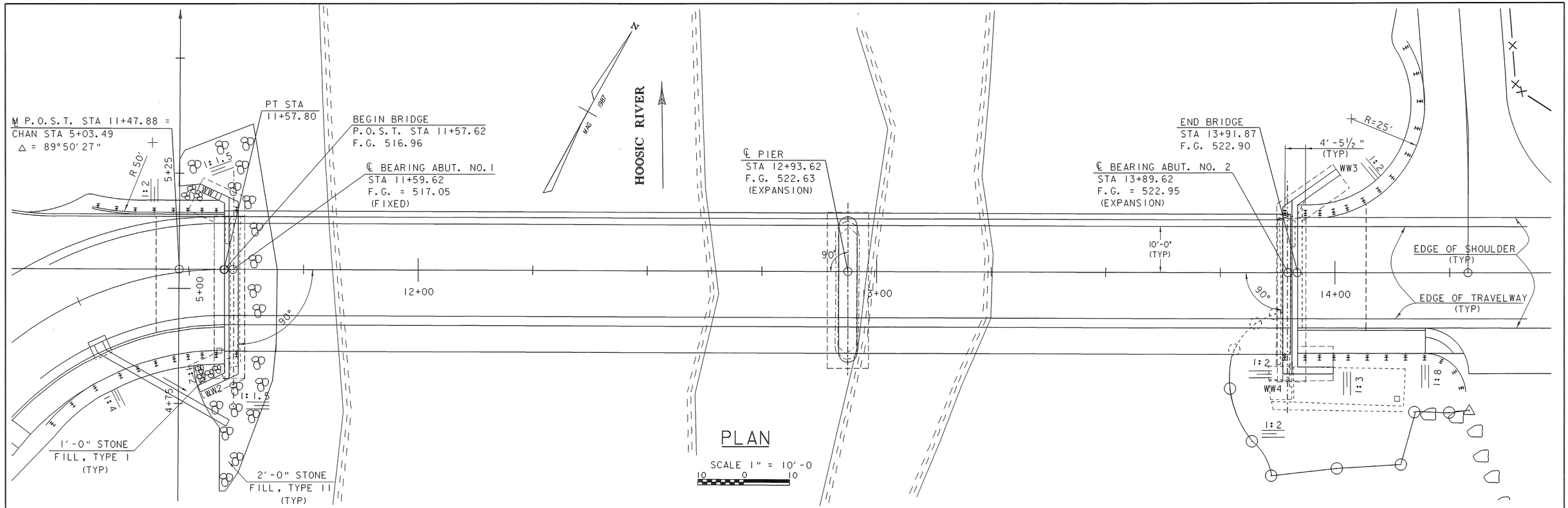

PLAN

SCALE 1" = 10'-0

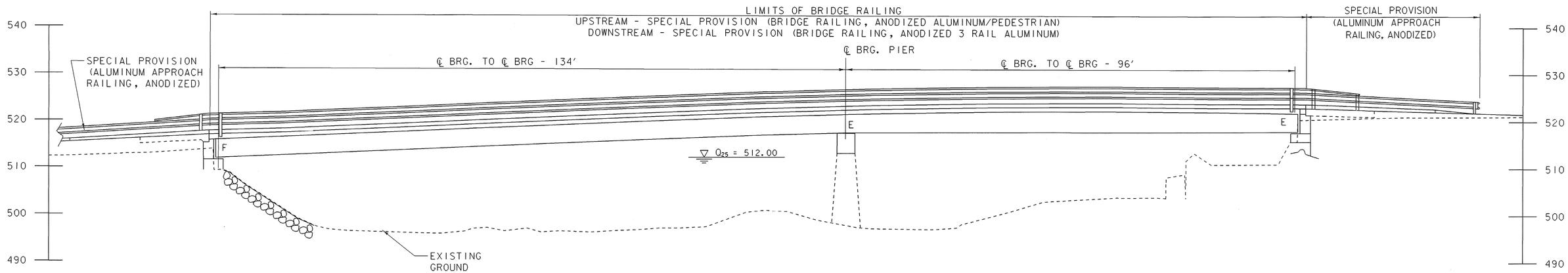

ELEVATION

SCALE 1" = 10'-0

SHEET NAME: PLAN AND ELEVATION SHEET	
PROJECT NAME: POWNAL	HIGHWAY NO.: TH 24
PROJECT NUMBER: BRZ 1441(19) C/2	BRIDGE NO.: 41
	OVER: HOOSIC RIVER
FILE NAME: 87e045/str/se045pe.dgn	PLOT DATE: 08-FEB-2008
PROJECT MANAGER: R. WHITCOMB	DRAWN BY: S.MAGNAN
DESIGNED BY: C. CARLSON	IPARM NAME: se045pe.i
	SHEET 26 OF 108

PROJECT DESCRIPTION

THIS PROJECT INVOLVES RECONSTRUCTION OF BRIDGE 41 CARRYING A CLASS 3 TOWN HIGHWAY OVER THE HOOSIC RIVER, IN A RESIDENTIAL NEIGHBORHOOD IN THE TOWN OF POWNAL. A NEW, TWO-SPAN SUPERSTRUCTURE WILL BE CONSTRUCTED ON THE EXISTING ALIGNMENT AND SUBSTRUCTURES WITH TRAFFIC MAINTAINED ON A TEMPORARY BRIDGE LOCATED DOWNSTREAM OF THE EXISTING BRIDGE.

THE STREAMBED NATURE CONSISTS OF SAND, GRAVEL, AND COBBLES WITH A DRAINAGE AREA OF 218.5 SQUARE MILES. FEATURES OF CONCERN WITH RESPECT TO EROSION CONTROL INCLUDE:

- ML STA 9+71 LT TO 9+82 RT: REMOVE 18" CMP AND ACCGMP
- ML STA 8+75 LT TO SL TH 25 STA 1+66.6 LT: CONSTRUCT STONE LINED DITCH
- ML STA 11+25 RT: 4'X4' RCDI W/ TYPE E GRATE AT INLET WITH 18" X 26' PIPE OPTION W/ STONE FILL, TYPE I AT OUTLET
- SL TH 25 STA 1+67.6 LT TO SL TH 25 STA 1+68.6 RT: 42" X 34' PIPE OPTION (NO CPEP(SL)) WITH CONC. HEADWALL AT INLET; 4' X 6' DI WITH TYPE E GRATE AT OUTLET
- SL TH 25 STA 1+68.6 RT - SL THE 25 STA 1+69.0 RT: 42" X 26' PIPE OPTION (NO CPEP(SL)) W/ 4'X6' RCDI W/ TYPE B GRATE AT OUTLET
- SL TH 26 STA 7+23 RT TO SL TH 26 STA 7+22.2 LT: REMOVE 15" CMP
- SL TH 26 STA 7+28.7 RT TO SL TH 26 STA 7+24.10 LT: 18" X 48' PIPE OPTION
- ML STA 10+50 RT TO ML STA 11+55 RT: CONSTRUCT SPECIAL DITCH
- SL TH 25 STA 1+68.2 LT TO SL TH 25 STA 1+64.4 RT: REMOVE 36" ACCGMP
- SL TH 26 STA 8+55 LT TO SL TH 26 STA 7+19 LT: CONSTRUCT STONE LINED DITCH
- SL TH 26 STA 8+55 RT TO SL TH 26 STA 7+23.2 RT: CONSTRUCT STONE LINED DITCH
- SL TH 25 STA 2+75LT TO SL TH 25 STA 2+14.5 LT: CONSTRUCT STONE LINED DITCH

VEGETATION IN THE IMMEDIATE VICINITY OF THE BRIDGE CONSISTS OF A MIXTURE OF TREES AND SHRUBS INCLUDING RED MAPLES, ASH, WILLOW, SPECKLED ALDER, BLUE BEECH AND RED OSIER DOGWOOD. THE SOILS WITHIN THE PROJECT AREA ARE POORLY DRAINED FLOODPLAIN SOILS.

OVERHEAD UTILITY LINES WILL BE RELOCATED AS INDICATED ON THE PROJECT PLANS.

TOTAL DISTURBED AREA (INCLUDING ON-SITE WASTE, BORROW AND STAGING AREAS): 1.80 ACRES.

NAME OF RECEIVING WATERS: HOOSIC RIVER

SITE INVENTORY AND ANALYSIS

OFF SITE DRAINAGE CHARACTERISTICS

THE BOSTON & MAINE CORPORATION RAIL LINE RUNS THROUGH THE EASTERN PORTION OF THE PROJECT AREA, WITH THE EASTERN SIDE OF THE HOOSIC RIVER LIGHT INDUSTRIAL. THE WESTERN SIDE OF THE HOOSIC RIVER IS RURAL RESIDENTAIL. VEGETATION CONSISTS OF WOODED AREAS AND GRASS WITHIN THE SMALL RESIDENTIAL LAWNS. THE EXISTING TRAVELED WAYS AND PARKING AREAS UTILIZE ROADSIDE DITCHES AND SUBSURFACE PIPES TO CONVEY RUNOFF TO THE HOOSIC RIVER. THE SURROUNDING AREA IS CLASSIFIED AS HILLY TO MOUNTAINOUS.

DRAINAGE, WATERWAYS, BODIES OF WATER

THE HOOSIC RIVER FLOWS UNDER THE EXISTING BRIDGE. THE RIVER IS CHARACTERIZED AS A STRAIGHT, LOCALLY ANABRANCHED, PROBABLY INCISED, AND SEMI-ALLUVIAL, WITH A DRAINAGE AREA OF 218.5 SQUARE MILES AT THE BRIDGE. THERE ARE SEVERAL CULVERTS IN THE PROJECT AREA THAT CARRY RUNOFF FROM ROADSIDE DITCHES TO THE RIVER, BUT THERE ARE NO KNOWN WETLANDS, EPHEMERAL STREAMS OR PONDS WITHIN THE PROJECT SITE.

TOPOGRAPHY, EXISTING ROADS, BUILDINGS, UTILITIES

THE TERRAIN IS HILLY TO MOUNTAINOUS SURROUNDING THE PROJECT SITE. VT RT 346, FURLONG ROAD, DEAN ROAD, SNAKE HILL ROAD, AND WOOD ROAD ARE LOCATED WITHIN THE PROJECT AREA; ALL ARE PAVED. A RAIL BED IS LOCATED WITHIN THE EASTERN SIDE OF THE BRIDGE PROJECT AREA. A PAVED ACCESS ROAD, A PORTION OF WHICH WILL BE REMOVED AND SEEDED, RUNS ALONG THE WESTERN SIDE OF THE RAIL BED. COMMERCIAL DRIVES ARE LOCATED ALONG THE EASTERN APPROACH OF THE PROJECT AREA. THERE ARE PAVED ACCESS DRIVES ALONG THE EASTERN PORTION OF FURLONG ROAD. AN EXISTING GARAGE LOCATED AT STA. 10+00.00 LT. WILL BE REMOVED. THE UTILITIES WITHIN THE PROJECT CONSIST OF OVERHEAD LINES WHICH WILL BE RELOCATED BY THEIR RESPECTIVE OWNERS.

VEGETATION

VEGETATION IN THE IMMEDIATE VICINITY OF THE BRIDGE CONSISTS OF A MIXTURE OF TREES AND SHRUBS INCLUDING RED MAPLES, ASH, WILLOW, SPECKLED ALDER, BLUE BEECH AND RED OSIER DOGWOOD.

THE RECONSTRUCTION OF ROADSIDE DITCHES WILL NECESSITATE THE REMOVAL OF SOME GRASS AND SHRUBS PRIMARILY ALONG THE EASTERN SIDE OF DEAN ROAD AND THE WESTERN APPROACH OF FURLONG ROAD.

SOILS

SOILS AT THE SITE CONSIST OF THE FOLLOWING UNITS:
COPAKE GRAVELLY FINE SANDY LOAM, 3 TO 8 PERCENT SLOPES. THIS MAP UNIT IS WELL SUITED TO CULTIVATED CROPS, HAY AND PASTURE. WATER EROSION IS A HAZARD. THIS MAP UNIT IS COMPOSED OF COARSE TEXTURED, SANDY AND/OR GRAVELLY GLACIAL OUTWASH SOILS WITH RAPID TO VERY RAPID PERMEABILITY IN THE SUBSTRATUM. THEY ARE VERY DEEP TO BEDROCK AND WELL DRAINED. THE EROSION K FACTOR IS 0.32.

POOTATUCK FINE SANDY LOAM, 0 TO 3 PERCENT SLOPES. THIS MAP UNIT IS WELL SUITED TO CULTIVATED CROPS, HAY AND PASTURE. THE MAJOR MANAGEMENT CONCERN IS A SEASONAL HIGH WATER TABLE. POOTATUCK SOILS FORMED IN LOAMY OVER SANDY ALLUVIAL DEPOSITS ON FLOOD PLAINS THAT ARE FREQUENTLY FLOODED FOR BRIEF DURATION FROM LATE FALL THROUGH EARLY SPRING. THEY ARE VERY DEEP TO BEDROCK AND MODERATELY WELL DRAINED. THESE SOILS HAVE A WATER TABLE AT DEPTHS OF 1.5 TO 2.5 FEET BELOW THE SURFACE FROM LATE FALL THROUGH EARLY SPRING. PERMEABILITY IS MODERATE OR MODERATELY RAPID IN THE SOLUM AND RAPID OR VERY RAPID IN THE SUBSTRATUM. THE EROSION K FACTOR IS 0.20.

HARTLAND SILT LOAM, 0 TO 5 PERCENT SLOPES. THIS MAP UNIT IS WELL SUITED TO CULTIVATED CROPS, HAY AND PASTURE. WATER EROSION IS A HAZARD. THIS MAP UNIT IS COMPOSED OF VERY DEEP SOILS WITH MODERATELY SLOW TO VERY SLOW PERMEABILITY IN THE SUBSTRATUM AND SEASONAL HIGH WATER TABLES AT DEPTHS GREATER THAN TWO FEET. HARTLAND SOILS FORMED IN LOAMY AEOLIAN OR GLACIOLACUSTRINE DEPOSITS ON TERRACES AND GLACIAL LAKE PLAINS. THEY ARE VERY DEEP TO BEDROCK AND WELL DRAINED. PERMEABILITY IS MODERATE IN THE SOLUM AND MODERATELY SLOW OR MODERATE IN THE SUBSTRATUM. THE EROSION K FACTOR IS 0.49
(USDA SOIL CONSERVATION SERVICE, 1992)

SENSITIVE RESOURCE AREAS

NO 'THREATENED & ENDANGERED SPECIES', PRIME AGRICULTURAL LAND, WETLANDS, OR CRITICAL HABITATS HAVE BEEN IDENTIFIED WITHIN THE PROJECT AREA. THE ONLY SENSITIVE AREA WITHIN THE PROJECT SITE IS THE THIRD BRANCH OF THE WHITE RIVER.

RISK EVALUATION

RISK DETERMINATION

THIS PROJECT HAS BEEN DETERMINED TO BE LOW RISK. PLEASE REFER TO THE CONSTRUCTION GENERAL PERMIT 3-9020(2006), NOI #5524-9020 FOR CONDITIONS RELATED TO THIS DETERMINATION.

RISK RE-EVALUATION

SHOULD CHANGES PRIOR TO OR DURING CONSTRUCTION RESULT IN A POTENTIAL CHANGE IN THE RISK THEN THE SELECTED CONTRACTOR WILL BE RESPONSIBLE FOR ADDITIONAL PERMITTING WITH VANR VIA FILING OF THE APPROPRIATE NOTICE OF INTENT UNDER THE CONSTRUCTION PERMIT PROCESS.

EROSION PREVENTION AND SEDIMENT CONTROL

THE EROSION CONTROL PLANS ARE MEANT AS A GUIDELINE FOR PREVENTING EROSION AND CONTROLLING SEDIMENT TRANSPORT. THE WORK OUTLINED IN THIS NARRATIVE CONSISTS OF APPLYING MEASURES THROUGHOUT THE LIFE OF THE PROJECT MINIMIZING SEDIMENT TRANSPORT TO THE RECEIVING WATERS. THE MEASURES INCLUDE STABILIZATION AND STRUCTURAL PRACTICES, STORM WATER CONTROLS AND OTHER POLLUTION PREVENTION CONTROLS.

EMPLOY TEMPORARY STABILIZATION PRACTICES IN INCREMENTAL STAGES (PHASING) AS CONSTRUCTION PROCEEDS. ADDITIONAL MEASURES MAY BE NEEDED DUE TO THE PHASING OF PROJECT AND AS DIRECTED BY THE ENGINEER.

PREVENTING INITIAL SOIL EROSION IS MUCH MORE EFFECTIVE THAN TREATING ERODED SEDIMENT. THEREFORE, STABILIZE ALL DISTURBED AREAS PROMPTLY AFTER CONSTRUCTION ACTIVITY HAS TEMPORARILY OR PERMANENTLY CEASED. MAINTAINING VEGETATED BUFFERS ALONG STREAM BANKS, WETLANDS OR OTHER SENSITIVE AREAS IS A CRUCIAL EROSION AND SEDIMENT CONTROL MEASURE THAT SHOULD BE ESTABLISHED WHEREVER POSSIBLE.

(REFER TO THE LOW RISK SITE HANDBOOK AND APPROPRIATE DETAIL SHEETS FOR EACH PRACTICE REQUIRED ON THE PROJECT TO INCLUDE BUT NOT LIMITED TO THE FOLLOWING.)

MARK SITE BOUNDARIES

PROJECT DEMARCATION FENCE

LIMIT DISTURBANCE AREA

PHASING PLAN

STABILIZE CONSTRUCITON ENTRANCE

STABILIZED CONSTRUCTION ENTRANCE

INSTALL SILT FENCE

SILT FENCE

SLOW DOWN CHANNELIZED RUNOFF

CHECK DAM

CONSTRUCT PERMANENT CONTROLS

TYPE I AND II STONE FOR SLOPE LINING AND CHANNEL PROTECTION
SEED AND MULCH
DRAINAGE INLETS AND PIPING

STABILIZE EXPOSED SOILS

SEED AND MULCH
EROSION MATTING

WINTER STABILIZATION

VARIOUS MEASURES SPECIFIC TO WINTER (SEE LOW RISK HANDBOOK)

STABILIZE SOIL AT FINAL GRADE

SEED AND MULCH
EROSION MATTING

INSPECT YOUR SITE

INSPECT SITE BASED ON PERMIT AUTHORIZATION REQUIREMENTS

EROSION CONTROL NARRATIVE

PROJECT NAME: POWNAL
PROJECT NUMBER: BRZ 1441(19) C/2

FILE NAME: 87e045/str/se045ec.dgn
PROJECT LEADER: R. WHITCOMB
DESIGNED BY: C. CARLSON
PLOT DATE: 08-FEB-2008
DRAWN BY: STR3
CHECKED BY: C. CARLSON
SHEET 27 OF 108



SCALE 1" = 20'-0
20 0 20

SHEET NAME:	EPSC EXISTING CONDITIONS SHEET #1		
PROJECT NAME:	POWNAL	HIGHWAY NO.:	TH 24
PROJECT NUMBER:	BRZ 1441(19) C/2	BRIDGE NO.:	41
		OVER:	HOOSIC RIVER
FILE NAME: /87e045/str/se045ecbdr.dgn		PLOT DATE:	08-FEB-2008
PROJECT MANAGER: R. WHITCOMB		DRAWN BY:	STR3
DESIGNED BY: C. CARLSON		IPARM NAME:	se045ecl.i
		SHEET 28 OF 108	

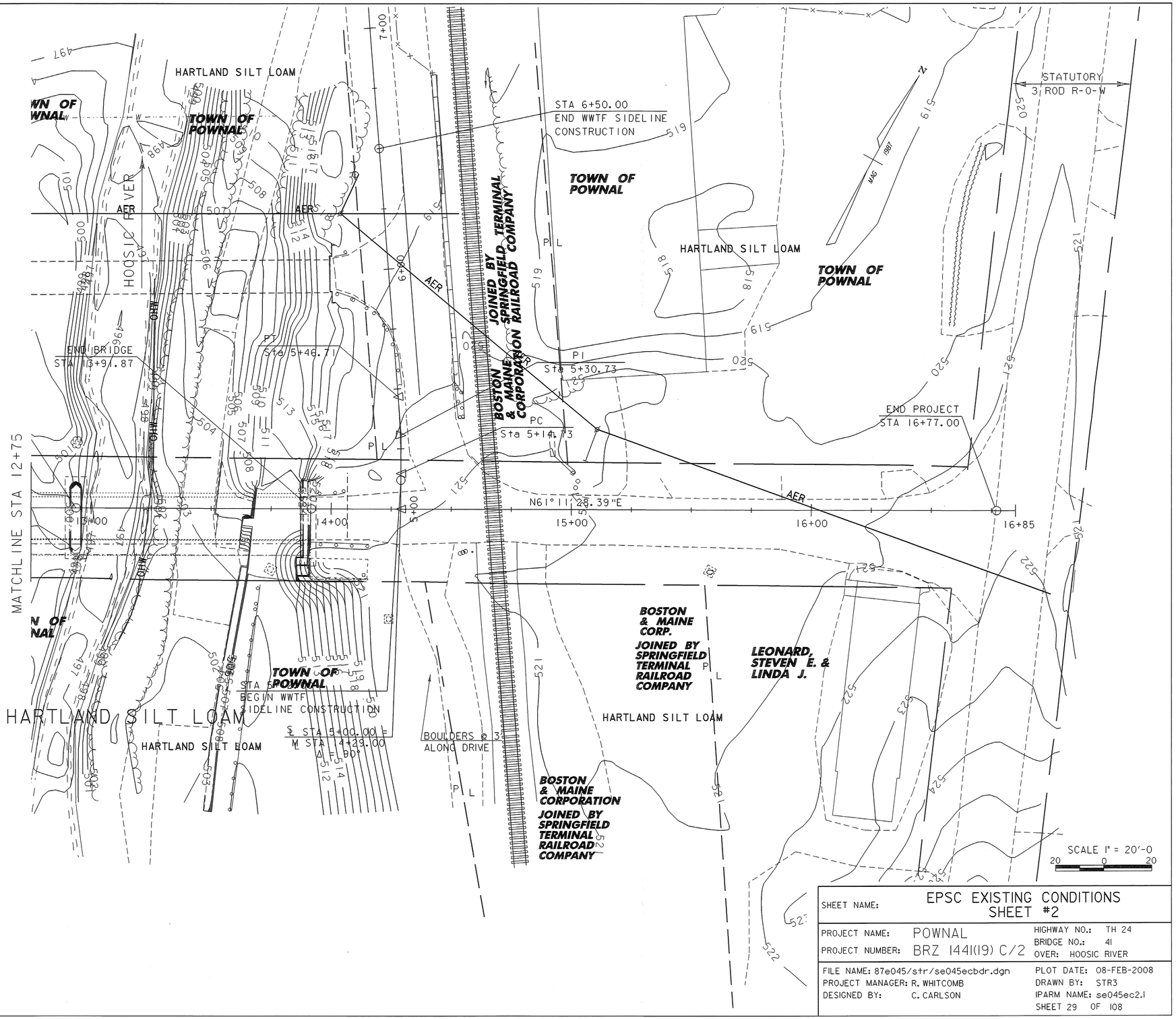

SHEET NAME:	EPSC EXISTING CONDITIONS SHEET #2
PROJECT NAME: POWNAL	HIGHWAY NO.: TH 24
PROJECT NUMBER: BRZ 1441(19) C/2	BRIDGE NO.: 41
	OVER: HOOSIC RIVER
FILE NAME: 87e045/str/se045ecbdr.dgn	PLOT DATE: 08-FEB-2008
PROJECT MANAGER: R. WHITCOMB	DRAWN BY: STR3
DESIGNED BY: C. CARLSON	IPARM NAME: se045ec2.i
	SHEET 29 OF 108

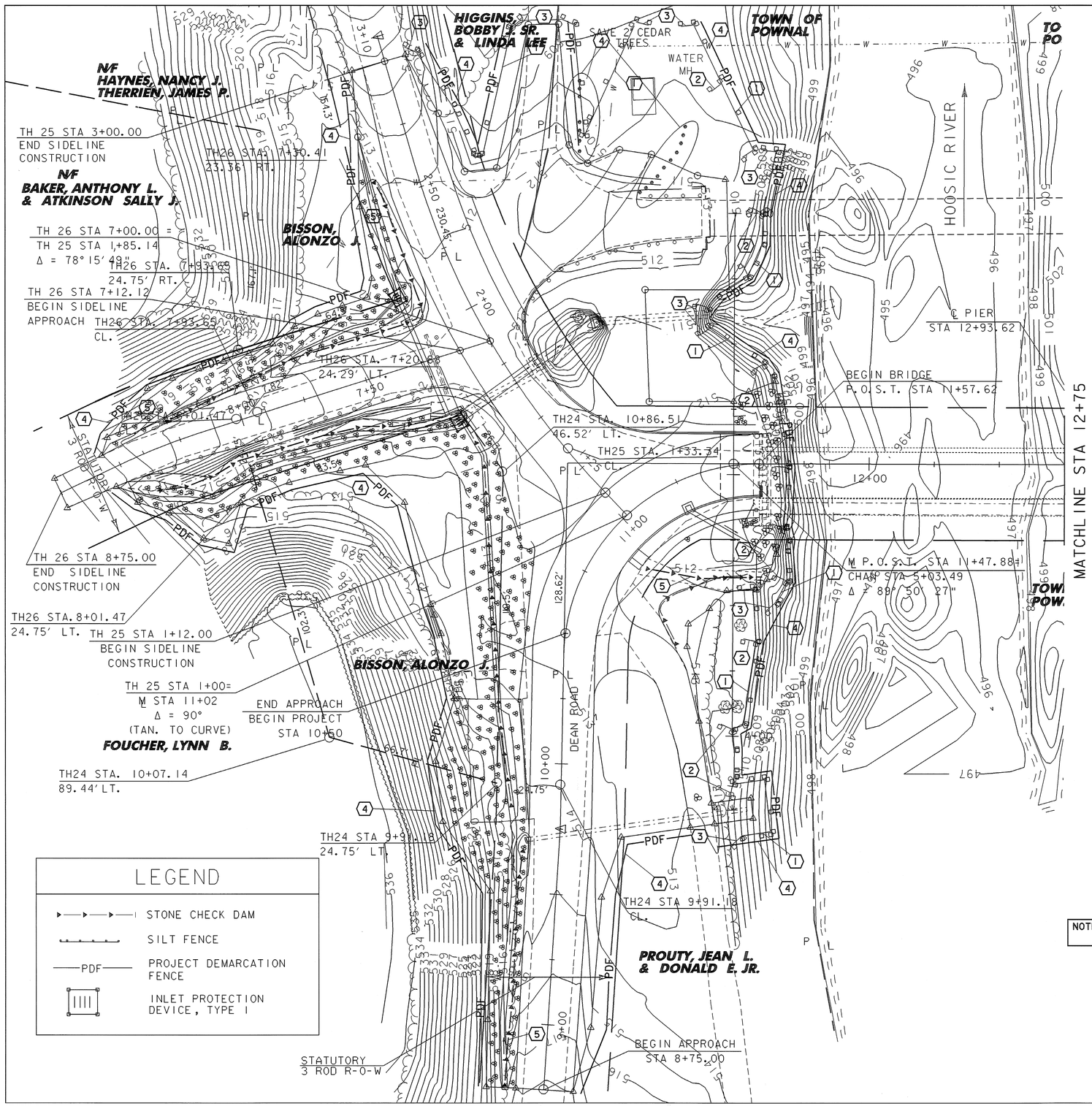

LEGEND

- STONE CHECK DAM
- SILT FENCE
- PDF — PROJECT DEMARCATION FENCE
- INLET PROTECTION DEVICE, TYPE I

EROSION CONTROL NOTES:

1) SILT FENCE INSTALLATION MAY REQUIRE PHASING TO MAXIMIZE EFFECTIVENESS (SUCH AS AROUND TOE OF TEMPORARY FILL SLOPE). INSTALL AND/OR MOVE SILT FENCE AS CONSTRUCTION PROGRESSES TO OBTAIN THE GREATEST PREVENTION OF SEDIMENT TRANSPORT.
2) SILT FENCE SHOULD BE INSTALLED ALONG THE CONTOURS TO PREVENT CONCENTRATION OF RUNOFF. THE ENDS OF EACH RUN OF SILT FENCE SHOULD BE TURNED UPHILL TO PROVIDE A SMALL POOL FOR SILT SHOULD WATER TRY TO RUN AROUND THE END OF THE SILT FENCE. TYPE OF SILT FENCE SHALL BE DETERMINED BY PROXIMITY OF RECEIVING WATERS. SEE SHEET 36 FOR DETAILS.
3) TIME GRADING TO MINIMIZE SOIL EXPOSURE.
4) RETAIN EXISTING VEGETATION WHENEVER FEASIBLE.
5) STABILIZE (MULCH) ALL DISTURBED AREAS DAILY TO PREVENT MOBILIZATION OF SEDIMENT.
6) KEEP RUNOFF VELOCITIES LOW.
7) PREPARE TEMPORARY DRAINAGEWAYS TO HANDLE CONCENTRATED FLOW UNTIL PERMANENT DRAINAGE IS CONSTRUCTED AND STABILIZED.
8) PREVENT SEDIMENT FROM LEAVING SITE BY MAINTAINING AND MODIFYING PERIMETER CONTROLS AS NEEDED.
9) MONITOR AND MAINTAIN ALL EROSION AND SEDIMENT CONTROL MEASURES.
10) ALL IN-STREAM CHANNEL WORK TO TAKE PLACE IN A DRY CHANNEL.
11) STATE WATER QUALITY STANDARDS WILL BE MAINTAINED AT ALL TIMES.
12) SEE SHEET 36 FOR SEEDING FORMULA.

EROSION AND SEDIMENT CONTROL INDEX	
NO.	DESCRIPTION
1	INSTALL SILT FENCE ALONG CONTOURS AS SHOWN
2	INSTALL SHORT SECTIONS TO CREATE PONDING OF RUNOFF ALONG FENCE
3	ENDS OF FENCE TURNED UPHILL TO CREATE PONDING
4	PROJECT LIMITS DEMARCATION FENCE
5	CONSTRUCT CHECK DAMS IN DRAINAGE CHANNELS

NOTE: ALL DISTURBED AREAS WITH SLOPES GREATER THAN 1:3 WILL REQUIRE TEMPORARY EROSION MATTING. (SEE EROSION CONTROL DETAILS SHEET.)

SCALE 1" = 20'-0
20 0 20

SHEET NAME: EPSC CONSTRUCTION PHASE SHEET #1

PROJECT NAME: POWNAL
PROJECT NUMBER: BRZ 1441(19) C/2
HIGHWAY NO.: TH 24
BRIDGE NO.: 41
OVER: HOOSIC RIVER

FILE NAME: 87e045/str/se045ecbdr.dgn
PROJECT MANAGER: R. WHITCOMB
DESIGNED BY: C. CARLSON
PLOT DATE: 08-FEB-2008
DRAWN BY: STR3
IPARM NAME: se045ec3.i
SHEET 30 OF 108

EROSION CONTROL NOTES:

1) SILT FENCE INSTALLATION MAY REQUIRE PHASING TO MAXIMIZE EFFECTIVENESS (SUCH AS AROUND TOE OF TEMPORARY FILL SLOPE). INSTALL AND/OR MOVE SILT FENCE AS CONSTRUCTION PROGRESSES TO OBTAIN THE GREATEST PREVENTION OF SEDIMENT TRANSPORT.

2) SILT FENCE SHOULD BE INSTALLED ALONG THE CONTOURS TO PREVENT CONCENTRATION OF RUNOFF. THE ENDS OF EACH RUN OF SILT FENCE SHOULD BE TURNED UPHILL TO PROVIDE A SMALL POOL FOR SILT SHOULD WATER TRY TO RUN AROUND THE END OF THE SILT FENCE. TYPE OF SILT FENCE SHALL BE DETERMINED BY PROXIMITY OF RECEIVING WATERS. SEE SHEET 36 FOR DETAILS.

3) TIME GRADING TO MINIMIZE SOIL EXPOSURE.

4) RETAIN EXISTING VEGETATION WHENEVER FEASIBLE.

5) STABILIZE (MULCH) ALL DISTURBED AREAS DAILY TO PREVENT MOBILIZATION OF SEDIMENT.

6) KEEP RUNOFF VELOCITIES LOW.

7) PREPARE TEMPORARY DRAINAGEWAYS TO HANDLE CONCENTRATED FLOW UNTIL PERMANENT DRAINAGE IS CONSTRUCTED AND STABILIZED.

8) PREVENT SEDIMENT FROM LEAVING SITE BY MAINTAINING AND MODIFYING PERIMETER CONTROLS AS NEEDED.

9) MONITOR AND MAINTAIN ALL EROSION AND SEDIMENT CONTROL MEASURES.

10) ALL IN-STREAM CHANNEL WORK TO TAKE PLACE IN A DRY CHANNEL.

11) STATE WATER QUALITY STANDARDS WILL BE MAINTAINED AT ALL TIMES.

12) SEE SHEET 36 FOR SEEDING FORMULA.

LEGEND

- STONE CHECK DAM
- SILT FENCE
- PDF — PROJECT DEMARCATION FENCE

NOTE: ALL DISTURBED AREAS WITH SLOPES GREATER THAN 1:3 WILL REQUIRE TEMPORARY EROSION MATTING. (SEE EROSION CONTROL DETAILS SHEET.)

EROSION AND SEDIMENT CONTROL INDEX	
NO.	**DESCRIPTION**
1	INSTALL CONTINUOUS LINE OF SILT FENCE ALONG PROJECT LIMITS
2	INSTALL SHORT SECTIONS TO CREATE PONDING OF RUNOFF ALONG FENCE
3	ENDS OF FENCE TURNED UPHILL TO CREATE PONDING
4	PROJECT LIMITS DEMARCATION FENCE
5	CONSTRUCT CHECK DAMS IN DRAINAGE CHANNELS

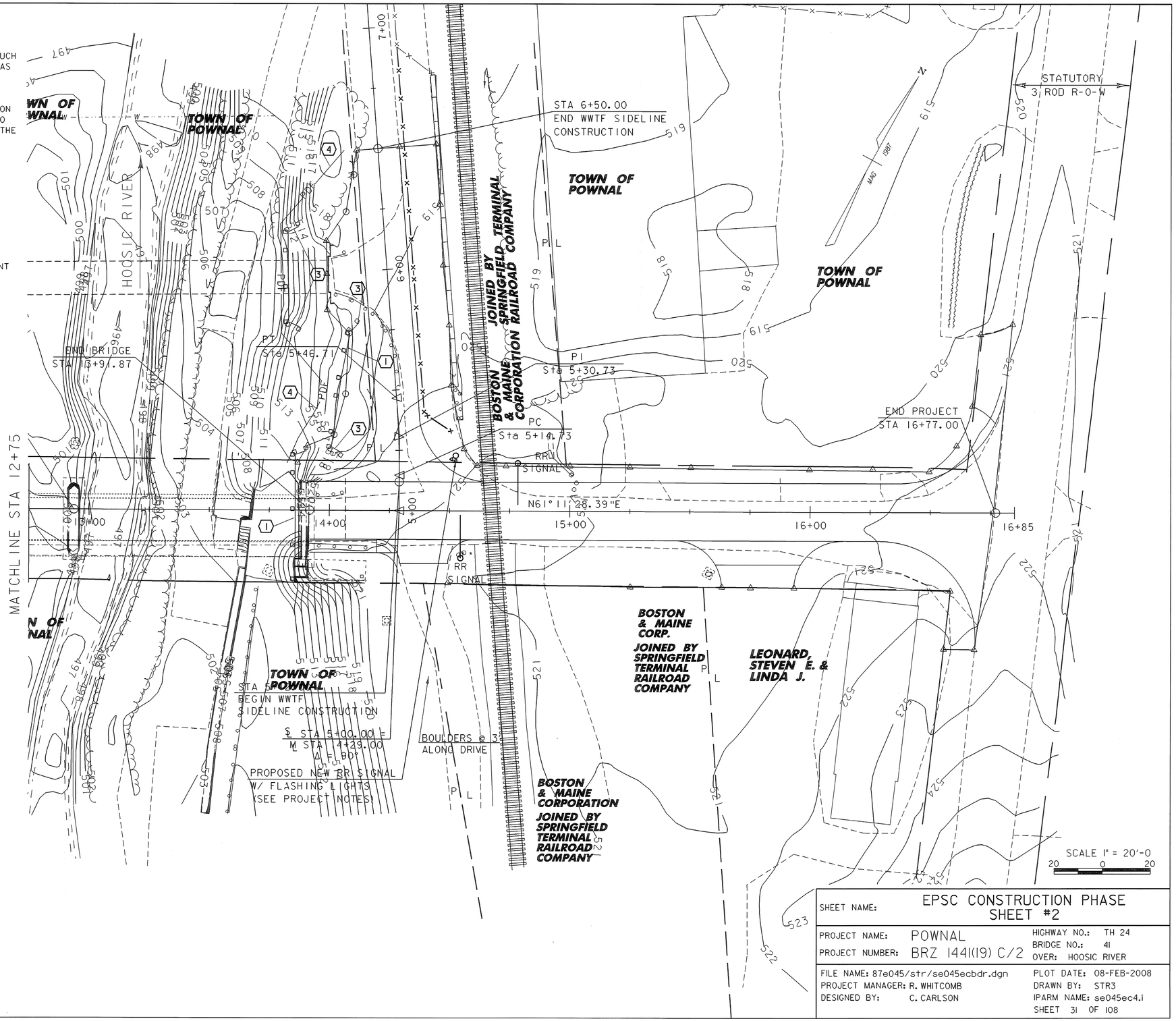

SHEET NAME:	EPSC CONSTRUCTION PHASE SHEET #2
PROJECT NAME: POWNAL	HIGHWAY NO.: TH 24
PROJECT NUMBER: BRZ 1441(19) C/2	BRIDGE NO.: 41 OVER: HOOSIC RIVER
FILE NAME: 87e045/str/se045ecbdr.dgn	PLOT DATE: 08-FEB-2008
PROJECT MANAGER: R. WHITCOMB	DRAWN BY: STR3
DESIGNED BY: C. CARLSON	IPARM NAME: se045ec4.i
	SHEET 31 OF 108

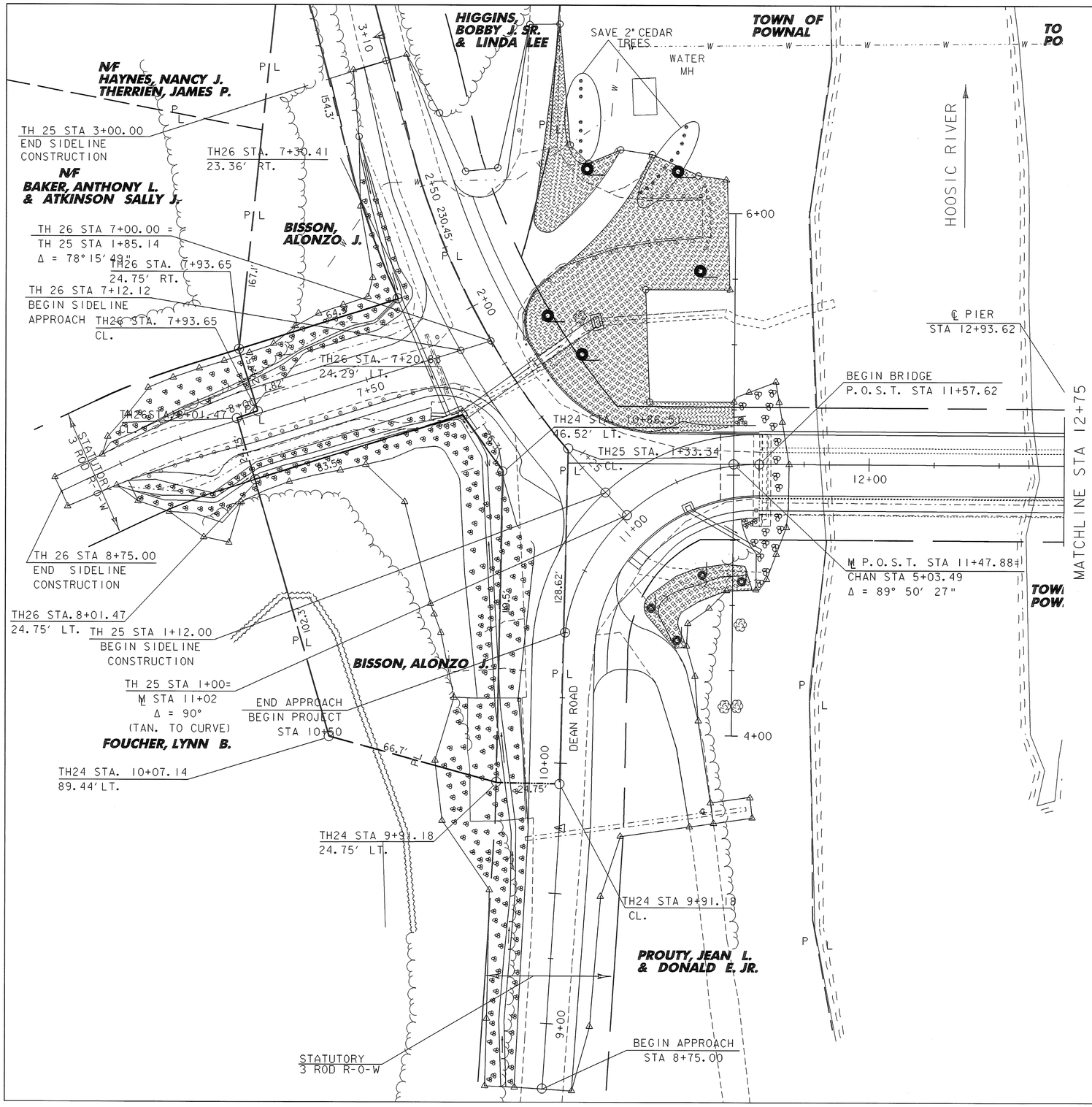

EROSION CONTROL NOTES:

1) TIME GRADING TO MINIMIZE SOIL EXPOSURE.
2) RETAIN EXISTING VEGETATION WHENEVER FEASIBLE.
3) STABILIZE (MULCH) ALL DISTURBED AREAS DAILY TO PREVENT MOBILIZATION OF SEDIMENT.
4) STATE WATER QUALITY STANDARDS WILL BE MAINTAINED AT ALL TIMES.
5) SEE SHEET 36 FOR SEEDING FORMULA.

LEGEND

- STONE FILL, TYPE II
- TEMPORARY EROSION MATTING
- SEED AND MULCH

SCALE 1" = 20'-0

20 0 20

SHEET NAME:	EPSC FINAL CONDITIONS SHEET #1		
PROJECT NAME:	POWNAL	HIGHWAY NO.:	TH 24
PROJECT NUMBER:	BRZ 1441(19) C/2	BRIDGE NO.:	41
		OVER:	HOOSIC RIVER
FILE NAME: 87e045/str/se045ecbdr.dgn		PLOT DATE:	08-FEB-2008
PROJECT MANAGER: R. WHITCOMB		DRAWN BY:	STR3
DESIGNED BY: C. CARLSON		IPARM NAME:	se045ec5.i
		SHEET 32 OF 108	

NOTES:

1) TIME GRADING TO MINIMIZE SOIL EXPOSURE.

2) RETAIN EXISTING VEGETATION WHENEVER FEASIBLE.

3) STABILIZE (MULCH) ALL DISTURBED AREAS DAILY TO PREVENT MOBILIZATION OF SEDIMENT.

4) STATE WATER QUALITY STANDARDS WILL BE MAINTAINED AT ALL TIMES.

5) SEE SHEET 36 FOR SEEDING FORMULA.

LEGEND

- STONE FILL, TYPE II
- TEMPORARY EROSION MATTING
- SEED & MULCH

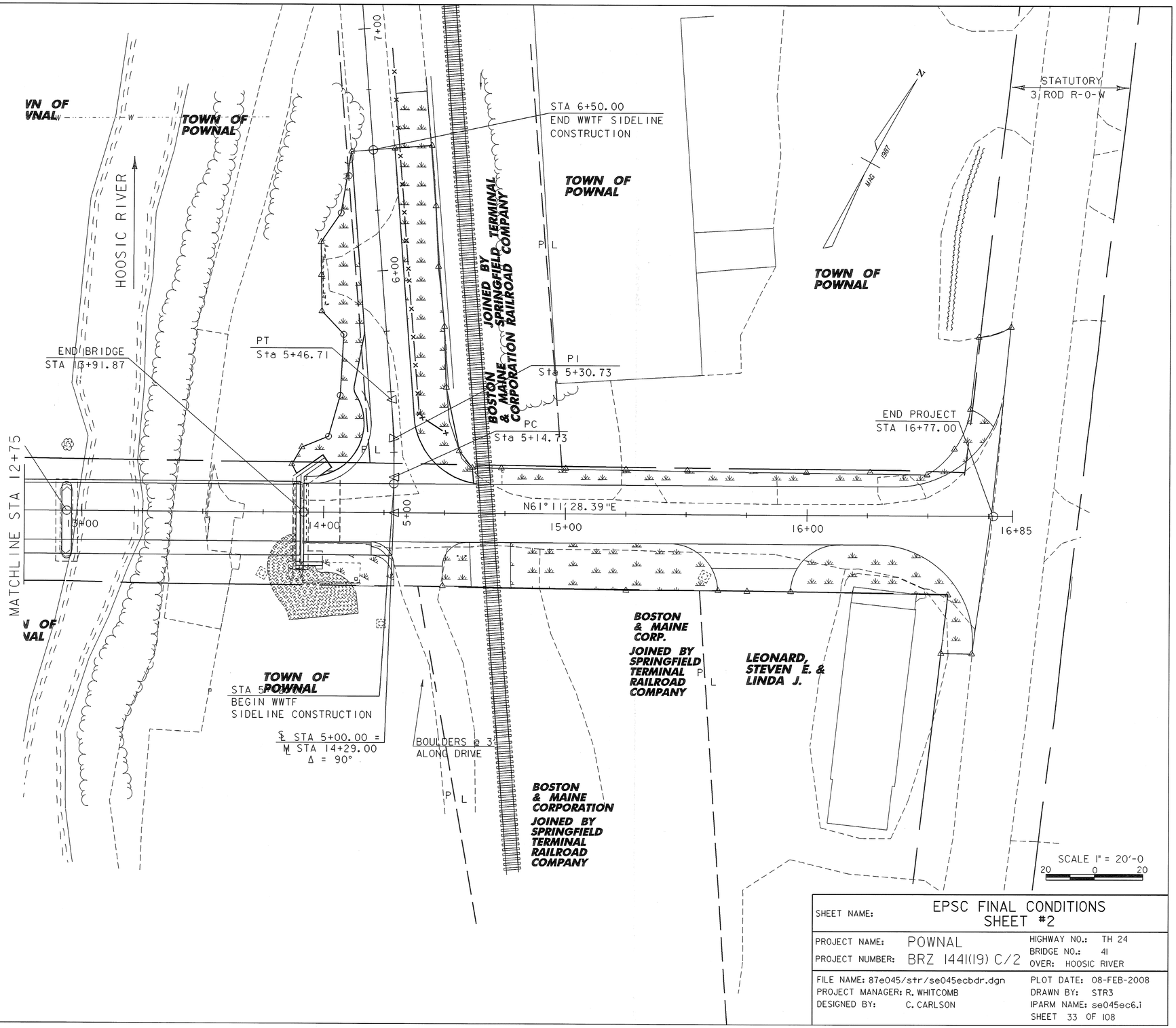

SHEET NAME:	EPSC FINAL CONDITIONS SHEET #2
PROJECT NAME: POWNAL	HIGHWAY NO.: TH 24
PROJECT NUMBER: BRZ 1441(19) C/2	BRIDGE NO.: 41 OVER: HOOSIC RIVER
FILE NAME: 87e045/str/se045ecbdr.dgn	PLOT DATE: 08-FEB-2008
PROJECT MANAGER: R. WHITCOMB	DRAWN BY: STR3
DESIGNED BY: C. CARLSON	IPARM NAME: se045ec6.i
	SHEET 33 OF 108

SYMBOL

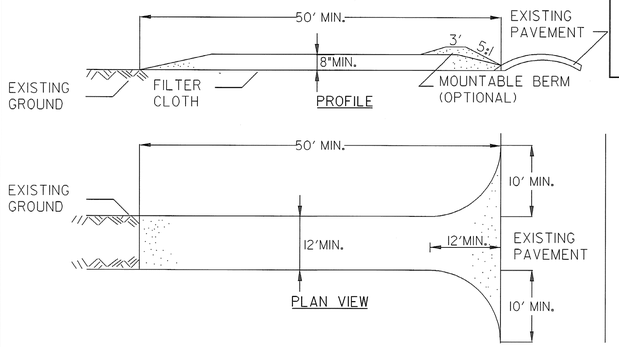

CONSTRUCTION SPECIFICATIONS

1. STONE SIZE - USE 1-4" STONE, OR RECLAIMED OR RECYCLED CONCRETE EQUIVALENT.
2. LENGTH - NOT LESS THAN 50 FEET (EXCEPT ON A SINGLE RESIDENCE LOT WHERE A 30 FOOT MINIMUM LENGTH APPLIES).
3. THICKNESS - NOT LESS THAN EIGHT (8) INCHES.
4. WIDTH - TWELVE (12) FOOT MINIMUM, BUT NOT LESS THAN THE FULL WIDTH AT POINTS WHERE INGRESS OR EGRESS OCCURS. TWENTY-FOUR (24) FOOT IF SINGLE ENTRANCE TO SITE.
5. GEOTEXTILE MUST BE PLACED OVER THE ENTIRE AREA PRIOR TO PLACING STONE.
6. SURFACE WATER - ALL SURFACE WATER FLOWING OR DIVERTED TOWARD CONSTRUCTION ENTRANCES SHALL BE PIPED BENEATH THE ENTRANCE. IF PIPING IS IMPRACTICAL, A MOUNTABLE BERM WITH 5:1 SLOPES WILL BE PERMITTED.
7. MAINTENANCE - THE ENTRANCE SHALL BE MAINTAINED IN A CONDITION WHICH WILL PREVENT TRACKING OR FLOWING OF SEDIMENT ONTO PUBLIC RIGHTS-OF-WAY, ALL SEDIMENT SPILLED, DROPPED, WASHED OR TRACKED ONTO PUBLIC RIGHTS-OF-WAY MUST BE REMOVED IMMEDIATELY.
8. WHEN WASHING IS REQUIRED, IT SHALL BE DONE ON AN AREA STABILIZED WITH STONE AND WHICH DRAINS INTO AN APPROVED SEDIMENT TRAPPING DEVICE.
9. PERIODIC INSPECTION AND NEEDED MAINTENANCE SHALL BE PROVIDED ACCORDING TO PERMIT REQUIREMENTS.

ADAPTED FROM DETAILS PROVIDED BY: NEW YORK STATE DEC
ORIGINALLY DEVELOPED BY USDA-NRCS
VERMONT DEPARTMENT OF ENVIRONMENTAL CONSERVATION

STABILIZED CONSTRUCTION ENTRANCE

NOTES:
REFER TO "THE VERMONT STANDARDS & SPECIFICATIONS FOR EROSION PREVENTION & SEDIMENT CONTROL -2006- " FROM THE VT AGENCY OF NATURAL RESOURCES FOR ADDITIONAL GUIDANCE.

THIS ITEM SHALL BE PAID FOR UNDER ITEM
653.35 VEHICLE TRACKING PAD

REVISIONS	
FEBRUARY 9, 2007	WHF
MARCH 8, 2007	JMF

SYMBOL

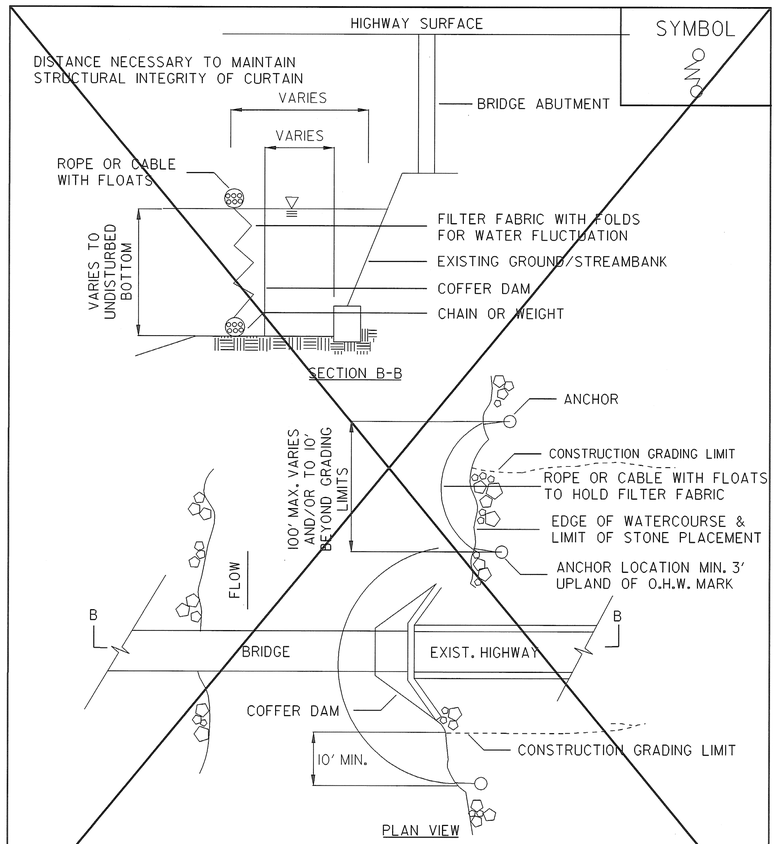

ADAPTED FROM DETAILS PROVIDED BY: NEW YORK STATE DEC
ORIGINALLY DEVELOPED BY USDA-NRCS
VERMONT AGENCY OF TRANSPORTATION

TURBIDITY CURTAIN

NOTES:
THIS ITEM SHALL BE PAID FOR UNDER ITEM
649.61 GEOTEXTILE FOR FILTER CURTAIN

SYMBOL

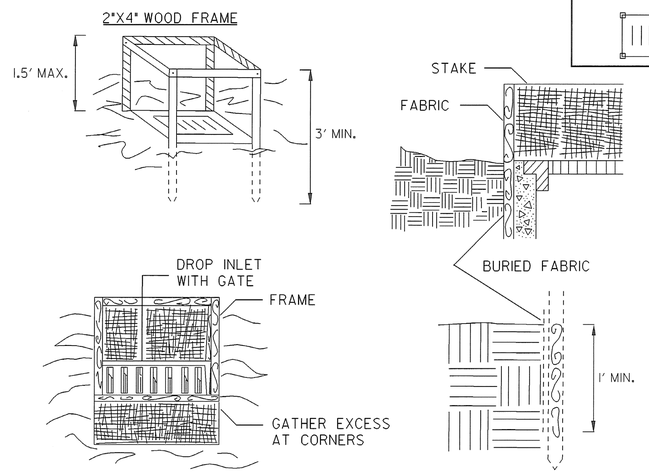

CONSTRUCTION SPECIFICATIONS

1. FILTER FABRIC SHALL HAVE AN EOS OF 40-85. BURLAP MAY BE USED FOR SHORT TERM APPLICATIONS.
2. CUT FABRIC FROM A CONTINUOUS ROLL TO ELIMINATE JOINTS. IF JOINTS ARE NEEDED THEY WILL BE OVERLAPPED TO THE NEXT STAKE.
3. STAKE MATERIALS WILL BE STANDARD 2" x 4" WOOD OR EQUIVALENT METAL WITH A MINIMUM LENGTH OF 3 FEET.
4. SPACE STAKES EVENLY AROUND INLET 3 FEET APART AND DRIVE A MINIMUM 18 INCHES DEEP. SPANS GREATER THAN 3 FEET MAY BE BRIDGED WITH THE USE OF WIRE MESH BEHIND THE FILTER FABRIC FOR SUPPORT.
5. FABRIC SHALL BE EMBEDDED 1 FOOT MINIMUM BELOW GROUND AND BACKFILLED. IT SHALL BE SECURELY FASTENED TO THE STAKES AND FRAME.
6. A 2" x 4" WOOD FRAME SHALL BE COMPLETED AROUND THE CREST OF THE FABRIC FOR OVER FLOW STABILITY.

MAXIMUM DRAINAGE AREA 1 ACRE

ADAPTED FROM DETAILS PROVIDED BY: NEW YORK STATE DEC
ORIGINALLY DEVELOPED BY USDA-NRCS
VERMONT DEPARTMENT OF ENVIRONMENTAL CONSERVATION

FILTER FABRIC DROP INLET PROTECTION

NOTES:
REFER TO "THE VERMONT STANDARDS & SPECIFICATIONS FOR EROSION PREVENTION & SEDIMENT CONTROL -2006- " FROM THE VT AGENCY OF NATURAL RESOURCES FOR ADDITIONAL GUIDANCE.

THIS ITEM SHALL BE PAID FOR UNDER ITEM
653.40 INLET PROTECTION DEVICE, TYPE I

REVISIONS	
MARCH 8, 2007	JMF

EPSC DETAIL SHEET 1

PROJECT NAME: POWNAL
PROJECT NUMBER: BRZ 1441(19) C/2

FILE NAME: 87e045/str/se045ec.dgn
PROJECT LEADER: R. WHITCOMB
DESIGNED BY: C. CARLSON
se045ecdl.i

PLOT DATE: 08-FEB-2008
DRAWN BY: STR3
CHECKED BY: C. CARLSON
SHEET 34 OF 108

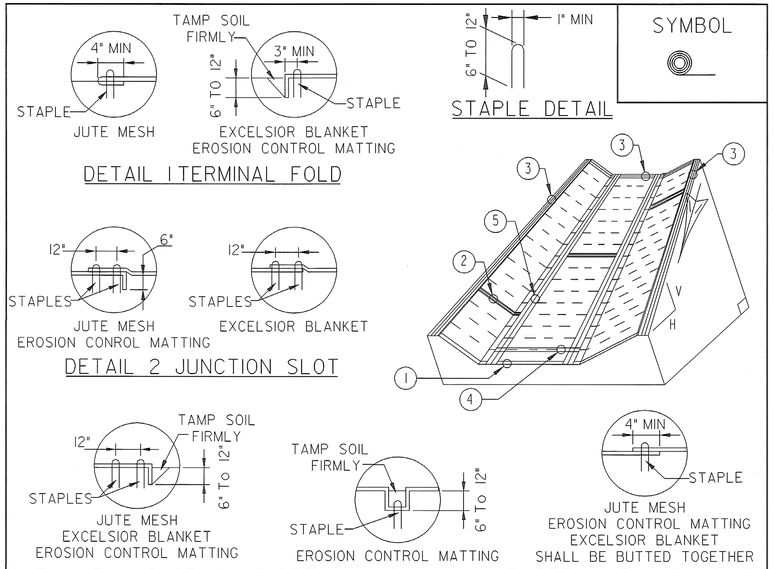

SYMBOL

CONSTRUCTION SPECIFICATIONS

1. EROSION MATTING, CHECK SLOTS, SHALL BE SPACED IN DITCH CHANNEL SO THAT ONE OCCURS WITHIN EACH 50' ON SLOPES OF MORE THAN 4% AND LESS THAN 6%. ON SLOPES OF 6% OR MORE, THEY SHALL BE SPACED SO THAT ONE OCCURS WITHIN EACH 25'.

2. APPLY FERTILIZER, LIME SEED PRIOR TO PLACING MATTING.

3. STAPLES ARE TO BE PLACED ALTERNATELY, IN COLUMNS APPROXIMATELY 2' APART AND IN ROWS APPROXIMATELY 3' APART. APPROXIMATELY 175 STAPLES ARE REQUIRED PER 4'X225' ROLL OF MATERIAL AND 125 STAPLES ARE REQUIRED PER 4'X150' ROLL OF MATERIAL.

4. DISTURBED AREAS SHALL BE SMOOTHLY GRADED. EROSION CONTROL MATERIAL SHALL BE PLACED LOOSELY OVER GROUND SURFACE. DO NOT STRETCH.

5. ALL TERMINAL ENDS AND TRANSVERSE LAPS SHALL BE STAPLED AT APPROXIMATELY 12" INTERVALS.

ADAPTED FROM DETAILS PROVIDED BY: ILLINOIS USDA-NRCS
ORIGINALLY DEVELOPED BY USDA-NRCS
VERMONT DEPARTMENT OF ENVIRONMENTAL CONSERVATION

ROLLED EROSION CONTROL PRODUCT (RECP) DITCH

NOTES:
REFER TO "THE VERMONT STANDARDS & SPECIFICATIONS FOR EROSION PREVENTION & SEDIMENT CONTROL -2006- " FROM THE VT AGENCY OF NATURAL RESOURCES FOR ADDITIONAL GUIDANCE.

THIS ITEM SHALL BE PAID FOR UNDER ITEM
653.20 TEMPORARY EROSION MATTING

REVISIONS	
MARCH 8, 2007	JMF
APRIL 16, 2007	WHF

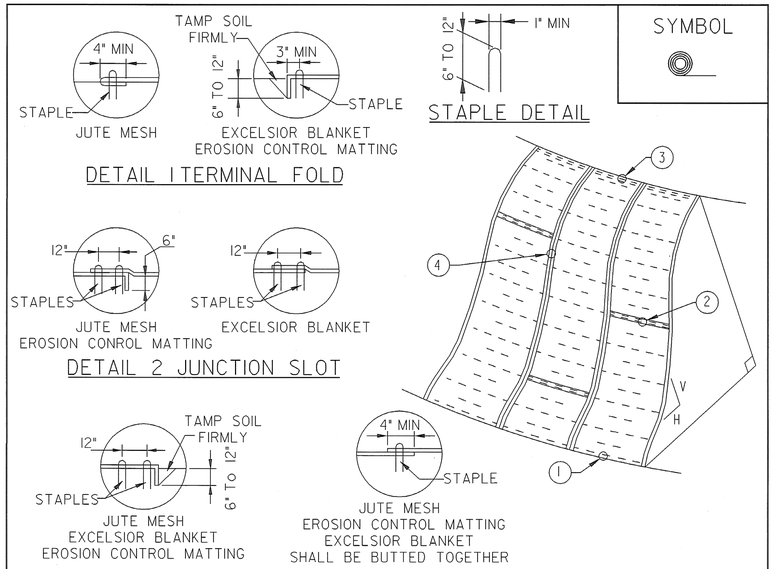

SYMBOL

CONSTRUCTION SPECIFICATIONS

1. APPLY TO SLOPES GREATER THAN 3H:1V OR WHERE NECESSARY TO AID IN ESTABLISHING VEGETATION.

2. APPLY FERTILIZER, LIME AND SEED PRIOR TO PLACING MATTING.

3. STAPLES ARE TO BE PLACED ALTERNATELY, IN COLUMNS APPROXIMATELY 2' APART AND IN ROWS APPROXIMATELY 3' APART. APPROXIMATELY 175 STAPLES ARE REQUIRED PER 4'X225' ROLL OF MATERIAL AND 125 STAPLES ARE REQUIRED PER 4'X150' ROLL OF MATERIAL.

4. DISTURBED AREAS SHALL BE SMOOTHLY GRADED. EROSION CONTROL MATERIAL SHALL BE PLACED LOOSELY OVER GROUND SURFACE. DO NOT STRETCH.

5. ALL TERMINAL ENDS AND TRANSVERSE LAPS SHALL BE STAPLED AT APPROXIMATELY 12" INTERVALS.

ADAPTED FROM DETAILS PROVIDED BY: ILLINOIS USDA-NRCS
ORIGINALLY DEVELOPED BY USDA-NRCS
VERMONT DEPARTMENT OF ENVIRONMENTAL CONSERVATION

ROLLED EROSION CONTROL PRODUCT (RECP) SIDE SLOPE

NOTES:
REFER TO "THE VERMONT STANDARDS & SPECIFICATIONS FOR EROSION PREVENTION & SEDIMENT CONTROL -2006- " FROM THE VT AGENCY OF NATURAL RESOURCES FOR ADDITIONAL GUIDANCE.

THIS ITEM SHALL BE PAID FOR UNDER ITEM
653.20 TEMPORARY EROSION MATTING

NEW	
APRIL 16, 2007	WHF
REVISIONS	

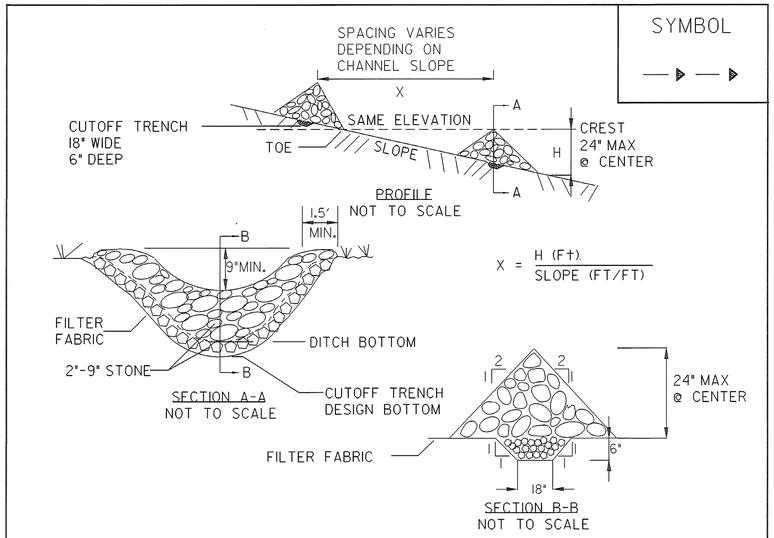

SYMBOL

CONSTRUCTION SPECIFICATIONS

1. STONE WILL BE PLACED ON A FILTER FABRIC FOUNDATION.

2. SET SPACING OF CHECK DAMS SO THAT THE ELEVATION OF THE CREST OF THE DOWNSTREAM DAM IS AT THE SAME ELEVATION AS THE TOE OF THE UPSTREAM DAM.

3. EXTEND THE STONE A MINIMUM OF 1.5 FEET BEYOND THE DITCH BANKS TO PREVENT CUTTING AROUND THE DAM.

4. PROTECT THE CHANNEL DOWNSTREAM OF THE LOWEST CHECK DAM FROM SCOUR AND EROSION WITH STONE OR LINER AS APPROPRIATE.

5. ENSURE THAT CHANNEL APPURTENANCES SUCH AS CULVERT ENTRANCES BELOW CHECK DAMS ARE NOT SUBJECT TO DAMAGE OR BLOCKAGE FROM DISPLACED STONE.

MAXIMUM DRAINAGE AREA 2 ACRES.

ADAPTED FROM DETAILS PROVIDED BY: NEW YORK STATE DEC
ORIGINALLY DEVELOPED BY USDA-NRCS
VERMONT DEPARTMENT OF ENVIRONMENTAL CONSERVATION

CHECK DAM

NOTES:
REFER TO "THE VERMONT STANDARDS & SPECIFICATIONS FOR EROSION PREVENTION & SEDIMENT CONTROL -2006- " FROM THE VT AGENCY OF NATURAL RESOURCES FOR ADDITIONAL GUIDANCE.

THIS ITEM SHALL BE PAID FOR UNDER ITEM
653.25 TEMPORARY STONE CHECK DAM, TYPE I

REVISIONS	
MARCH 8, 2007	JMF

EPSC DETAIL SHEET 2

PROJECT NAME: POWNAL
PROJECT NUMBER: BRZ 1441(19) C/2

FILE NAME: 87e045/str/se045ec.dgn
PROJECT LEADER: R. WHITCOMB
DESIGNED BY: C. CARLSON
se045ecd2.i

PLOT DATE: 08-FEB-2008
DRAWN BY: STR3
CHECKED BY: C. CARLSON
SHEET 35 OF 108

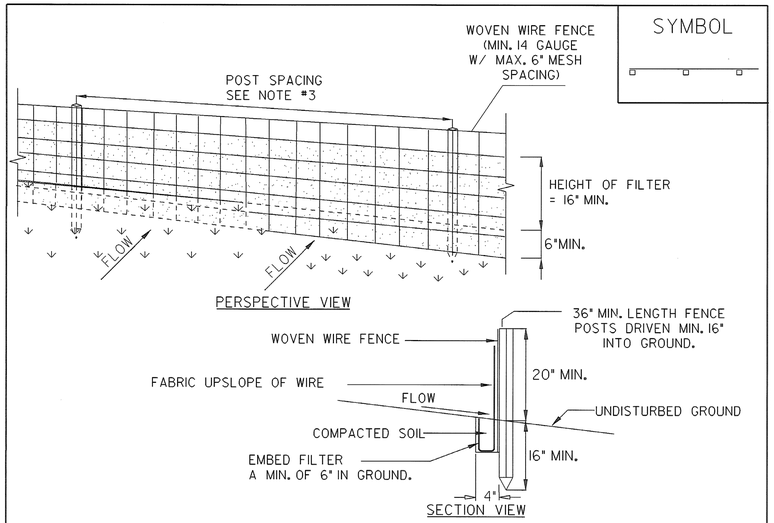

SYMBOL

CONSTRUCTION SPECIFICATIONS

1. WOVEN WIRE FENCE REINFORCEMENT IS ONLY REQUIRED WITHIN 100 FT UPSLOPE OF RECEIVING WATERS.

2. WHERE REQUIRED FENCE SHALL BE WOVEN WIRE, MIN. 14 GAUGE WITH A 6" MAXIMUM MESH OPENING. FILTER CLOTH SHALL BE EITHER FILTER X, MIRAFI100X, STABILINKA T140N OR APPROVED EQUIVALENT.

3. POST SPACING FOR WIRE-BACKED FENCE SHALL BE 10' MAXIMUM. FOR FILTER-CLOTH FENCE, WHEN ELONGATION IS >50%, POST SPACING SHALL NOT EXCEED 4'. FOR FILTER-CLOTH FENCE, WHEN ELONGATION IS <50%, POST SPACING SHALL NOT EXCEED 6'.

4. WOVEN WIRE FENCE IS TO BE FASTENED SECURELY TO FENCE POSTS WITH WIRE TIES. FILTER CLOTH IS TO BE FASTENED SECURELY TO WOVEN WIRE FENCE WITH TIES SPACED EVERY 24" AT TOP AND MID SECTION.

5. WHEN TWO SECTIONS OF FILTER CLOTH ADJOIN EACH OTHER THEY SHALL BE OVER-LAPPED BY SIX INCHES AND FOLDED.

6. PREFABRICATED UNITS SHALL BE GEOFAB, ENVIROFENCE, OR APPROVED EQUIVALENT.

7. MAINTENANCE SHALL BE PERFORMED AS NEEDED AND MATERIAL REMOVED WHEN SEDIMENT REACHES HALF OF FABRIC HEIGHT.

ADAPTED FROM DETAILS PROVIDED BY: NEW YORK STATE DEC
ORIGINALLY DEVELOPED BY USDA-NRCS
VERMONT DEPARTMENT OF ENVIRONMENTAL CONSERVATION

SILT FENCE

NOTES:
REFER TO "THE VERMONT STANDARDS & SPECIFICATIONS FOR EROSION PREVENTION & SEDIMENT CONTROL -2006- " FROM THE VT AGENCY OF NATURAL RESOURCES FOR ADDITIONAL GUIDANCE.

WOVEN WIRE FENCE REINFORCED SILT FENCE WILL BE PAID FOR UNDER ITEM 900.675, SPECIAL PROVISION (GEOTEXTILE FOR SILT FENCE, WOVEN WIRE REINFORCED)

SILT FENCE WITH FILTER FABRIC ONLY WILL BE PAID FOR UNDER ITEM 649.51, GEOTEXTILE FOR SILT FENCE

SEEDING FORMULA
URBAN AREAS

% WT.	LBS./A.	NAME	PUR %	GERM %
42.5	34.0	CREEPING RED FESCUE	98	85
10.0	8.0	PERENNIAL RYE GRASS	95	90
42.5	34.0	KENTUCKY BLUE GRASS	85	85
5.0	4.0	ANNUAL RYE GRASS	95	85
100.00	80.0			

GENERAL NOTES

SEED MIXTURE: SHALL NOT HAVE A WEED CONTENT EXCEEDING 0.40% BY WEIGHT AND SHALL BE FREE OF ALL NOXIOUS SEED.

SEED: TO BE APPLIED PER SEEDING FORMULAS OR AS DIRECTED BY THE ENGINEER.

FERTILIZER: FORMULA 10-20-10, TO BE USED WITH SEED, APPLIED AT THE RATE OF 500 LBS./ACRE. (HYDRO SEEDERS MAY USE 19-19-19 FORMULA).

AGRICULTURAL LIMESTONE: TO BE APPLIED AT THE RATE OF 2 TONS/ACRE, OR AS DIRECTED BY THE ENGINEER.

HAY MULCH: TO BE PLACED ON EARTH SLOPES AT THE RATE OF 2 TONS/ACRE, OR AS DIRECTED BY THE ENGINEER.

TOPSOIL: TO BE USED WITH SEED AS INDICATED ON THE PLANS, OR AS DIRECTED BY THE ENGINEER.

SLOPE ROUNDING: ALL CUT SLOPES TO BE ROUNDED IN ACCORDANCE WITH STANDARD SHEET B - 5.

EPSC DETAIL SHEET 3

PROJECT NAME: POWNAL
PROJECT NUMBER: BRZ 1441(19) C/2

FILE NAME: 87e045/str/se045ec.dgn
PROJECT LEADER: R. WHITCOMB
DESIGNED BY: C. CARLSON
se045ecd3.i

PLOT DATE: 08-FEB-2008
DRAWN BY: STR3
CHECKED BY: C. CARLSON
SHEET 36 OF 108

PROJECT NOTES

1. ALL MATERIALS AND CONSTRUCTION SHALL CONFORM TO THE STATE OF VERMONT AGENCY OF TRANSPORTATION STANDARD SPECIFICATIONS FOR CONSTRUCTION DATED 2006, AND ITS LATEST REVISIONS, AND THE AASHTO STANDARD SPECIFICATIONS FOR HIGHWAY BRIDGES, DATED 2002, AND ITS LATEST REVISIONS.

2. DURING CONSTRUCTION, TRAFFIC SHALL BE MAINTAINED ON THE EXISTING TEMPORARY BRIDGE CONSTRUCTED DOWNSTREAM OF THE EXISTING TRUSS STRUCTURE.

3. THE CONTRACTOR SHALL ERECT AND MAINTAIN ALL ON AND OFF-PROJECT SIGNS AND BARRICADES AS SHOWN IN THE VAOT STANDARDS AND AS DIRECTED BY THE RESIDENT ENGINEER. PAYMENT FOR THIS WORK SHALL BE CONSIDERED INCIDENTAL TO ITEM 641.10, "TRAFFIC CONTROL."

4. FULL ACCESS TO ALL SIDE ROADS AND DRIVES WITHIN THE PROJECT LIMITS SHALL BE MAINTAINED AT ALL TIMES. THIS WORK SHALL BE CONSIDERED INCIDENTAL TO ITEM 641.10, "TRAFFIC CONTROL." WHEN THE CONTRACTOR MUST TEMPORARILY RESTRICT ACCESS TO THE DRIVES, THE CONTRACTOR SHALL NOTIFY THE PROPERTY OWNERS IN ADVANCE.

5. THE CONTRACTOR SHALL TAKE ALL PRECAUTIONS NECESSARY TO PREVENT SILTATION OR POLLUTION, IN PARTICULAR THE DISCHARGE OF RAW CONCRETE INTO THE HOOSIC RIVER, AS DIRECTED BY THE RESIDENT ENGINEER AND STANDARD SPECIFICATIONS SECTION 105.

6. ALL DIMENSIONS SHOWN IN THE PLANS ARE HORIZONTAL OR VERTICAL AND ARE GIVEN AT 68 DEGREES FAHRENHEIT, UNLESS NOTED OTHERWISE

7. THE "STONE FILL, TYPE II" UNDER THE BRIDGE AS SHOWN IN THE PLANS SHALL BE PLACED BEFORE THE NEW STEEL GIRDERS ARE SET.

8. NO WORK ON THIS PROJECT IS ANTICIPATED BELOW ORDINARY HIGH WATER; THEREFORE, THERE IS NO CORPS OF ENGINEERS (COE) PERMIT. DURING CONTRACT ONE, THE PERMITTING AGENCIES ALLOWED A CROSSING BETWEEN THE EASTERLY RIVER BANK AND THE MID-STREAM ISLAND. IF THIS OR ANY OTHER IN-STREAM OR BELOW ORDINARY HIGH WATER WORK IS DESIRED, THE CONTRACTOR WILL BE RESPONSIBLE FOR OBTAINING A COE PERMIT AND/OR AMENDMENTS TO THE STREAM ALTERATION PERMIT.

9. THE MABEY TRUSS IS DESIGNED FOR AN HS-20 LIVE LOAD. IF THE CONTRACTOR WISHES TO LOAD THE BRIDGE WITH ANYTHING LARGER FOR THE STEEL ERECTION OR ANY OTHER OPERATION, HE WILL BE REQUIRED TO SUBMIT THE LOADINGS TO MABEY BRIDGE & SHORING, INC. FOR EVALUATION. THE CONTRACTOR WILL PROVIDE THE LOADING DETAILS AND THE RESULTS OF THE MABEY BRIDGE EVALUATION IN A SUBMITTAL TO THE ENGINEER FOR HIS APPROVAL PRIOR TO PLACING THE LOADS ON THE BRIDGE. ALL COSTS FOR THESE SUBMITTALS, REVIEWS AND ADDITIONAL SUPPORTS, SHORING AND/OR PERMITTING WILL BE CONSIDERED INCIDENTAL TO ITEM 506.55.

REMOVAL ITEMS

10. THE EXISTING FOUNDATION WALL AND CONCRETE SLAB LOCATED ADJACENT TO ABUTMENT NO. 2 WILL BE REMOVED AS SHOWN IN THE PLANS. THIS REMOVAL WORK WILL BE PAID FOR AS ITEM 203.16, "SOLID ROCK EXCAVATION".

11. REMOVAL OF EXISTING TEMPORARY BRIDGE: THE ITEM 529.15, "REMOVAL OF STRUCTURE (5200 SF-EST)" SHALL INCLUDE THE REMOVAL OF THE EXISTING TEMPORARY "MABEY" BRIDGE, EXISTING H-PILE PIERS AND THE EXISTING CONCRETE ABUTMENTS. THE EXISTING ABUTMENTS SHALL BE REMOVED IN THEIR ENTIRETY. THE EXISTING PIER H-PILES SHALL BE REMOVED DOWN TO ELEVATION 501.00. ALSO, INCLUDED IN THIS ITEM IS THE REMOVAL OF THE EXISTING CONCRETE BARRIERS LOCATED AT EACH END OF THE EXISTING TRUSSES AND ALONG THE RAILROAD INCLUDING THE ENERGY ATTENUATOR AND THE EXISTING APPROACH RAILING LOCATED AT EACH END OF THE EXISTING "MABEY" BRIDGE.

12. THE EXISTING CONCRETE BARRIERS, ENERGY ATTENUATOR AND EXISTING APPROACH RAILING SHALL BE DELIVERED TO THE DISTRICT GARAGE IN BENNINGTON. THE ITEMS SHALL BE REMOVED WITH CARE AND STOCKPILED ON THE PROJECT SITE. ANY DAMAGE TO THESE ITEMS DURING THEIR REMOVAL SHALL BE REPAIRED OR REPLACED BY THE CONTRACTOR TO THE SATISFACTION OF THE RESIDENT ENGINEER AT NO ADDITIONAL COST TO THE AGENCY. THE CONTRACTOR SHALL CONTACT WAYNE GAMMELL, DTA #1 AT LEAST TWO WEEK PRIOR TO THE REMOVAL OF THESE ITEMS. SEE SPECIAL PROVISIONS, FOR ADDITIONAL INFORMATION AND REQUIREMENTS. THE DELIVERY OF THESE ITEMS SHALL BE INCLUDED IN PAY ITEM, 529.15, "REMOVAL OF STRUCTURE (5200 SF-EST).

13. THE CONTRACTOR SHALL COORDINATE THE REMOVAL OF THE "MABEY" BRIDGE BY CONTACTING TAMMY ELLIS, DTA #3 AT LEAST TWO WEEK PRIOR TO THE REMOVAL. TAMMY ELLIS CAN BE CONTACTED AT (802) 786-5826. THE "MABEY" BRIDGE SHALL BE DISASSEMBLED, CLEANED, SORTED, BUNDLED, LOADED AND DELIVERED TO THE DISTRICT GARAGE IN MENDON. SEE SPECIAL PROVISIONS FOR ADDITIONAL INFORMATION AND REQUIREMENTS.

14. EXISTING SIGNS AND POSTS LISTED AS BEING REMOVED AS SHOWN ON SHEETS (19-20) SHALL REMAIN THE PROPERTY OF DISTRICT 1. THE SIGNS AND POSTS SHALL BE STOCKPILED FOR THE DISTRICT FORCES TO REMOVE.

15. THE EXISTING GARAGE LOCATED AT STATION 10+00 LT SHALL BE REMOVED IN ITS ENTIRETY. THIS WORK WILL BE PAID FOR UNDER THE ITEM 202.10, "DEMOLITION AND DISPOSAL OF BUILDING".

16. REMOVAL OF EXISTING TRUSS BRIDGES: THE EXISTING STEEL TRUSSES, FLOOR SYSTEM, RAILING, LATERAL BRACING AND PLATES THAT MAKE UP THE TRUSSES ARE PAINTED WITH A MATERIAL THAT MAY CONTAIN LEAD. THE CONTRACTOR SHALL FOLLOW ALL APPLICABLE REGULATIONS WHEN HANDLING AND WORKING WITH THIS STEEL. THE REMOVED STRUCTURAL STEEL IS THE PROPERTY OF THE CONTRACTOR. THE CONTRACTOR SHALL INDEMNIFY AND HOLD THE STATE, ITS OFFICERS, AND EMPLOYEES HARMLESS CONCERNING THE CONTRACTOR'S USE OR DISPOSITION OF THE REMOVED EXISTING STRUCTURAL STEEL. REMOVAL OF THE EXISTING BRIDGE 41 SUPERSTRUCTURE IN ITS ENTIRETY INCLUDING BEARINGS AND BRIDGE RAILING SHALL BE PAID FOR UNDER ITEM 529.20 "PARTIAL REMOVAL OF STRUCTURE". THE EXISTING ABUTMENTS AND PIERS SHALL BE REMOVED TO THE "CUT LINE" LIMITS SHOWN ON THE PLANS. THIS WORK WILL BE PAID FOR UNDER THE ITEM 529.25, "REMOVAL OF CONCRETE AND MASONRY."

17. THE EXISTING ROADWAY PAVEMENT LOCATED BETWEEN THE NEW DRIVEWAY AT STATION 2+00 RT AND THE ABUTMENT AT THE WEST END OF THE EXISTING TEMPORARY BRIDGE SHALL BE REMOVED UNDER THE PAY ITEM 203.28, "EXCAVATION OF SURFACES AND PAVEMENTS."

18. THE EXISTING ROADWAY PAVEMENT FROM WWTF SIDELINE STATION 5+12 RT TO WWTF SIDELINE STATION 6+50 RT +/- THAT RUNS PARALLEL TO THE RAILROAD TRACKS SHALL BE REMOVED UNDER THE PAY ITEM 203.28, "EXCAVATION OF SURFACES AND PAVEMENTS."

19. PAYMENT FOR REMOVAL OF EXISTING BITUMINOUS PAVEMENT ON THE EXISTING TRUSS BRIDGES SHALL BE MADE UNDER THE ITEM 529.10, "REMOVAL OF BRIDGE PAVEMENT". THE MATERIAL SHALL BECOME THE PROPERTY OF THE CONTRACTOR AND SHALL BE DISPOSED OF PROPERLY AT AN OFFSITE LOCATION.

STRUCTURAL STEEL AND PILES

20. STRUCTURAL STEEL MEMBERS DESIGNATED "CVN" IN THE PLANS SHALL BE CHARPY V-NOTCH TESTED IN ACCORDANCE WITH SUBSECTION 714.01 OF THE STANDARD SPECIFICATIONS.

21. ALL FIELD CONNECTIONS SHALL BE MADE WITH 7/8 INCH DIAMETER BOLTS MEETING SUBSECTION 714.05.

22. ALL STRUCTURAL STEEL WITHIN 8 FEET OF THE GIRDER ENDS AT ABUTMENT NUMBER TWO SHALL BE PAINTED. THE COLOR OF THE FINAL COAT OF PAINT SHALL BE BROWN AND SHALL CONFORM TO FEDERAL STANDARD NUMBER 595, COLOR CHIP NUMBER 20059. THIS WORK WILL BE PAID FOR UNDER THE ITEMS 513.25, "STRUCTURAL PAINTING, SHOP APPLIED (3.5 TONS)" AND 513.40, "SURFACE PREPARATION, SHOP APPLIED (3.5 TONS)".

23. THE ABUTMENT ENDS OF THE GIRDERS SHALL BE GREASED AS PER SUBSECTION 513.06(d). THIS WORK WILL BE PAID FOR UNDER "STRUCTURAL PAINTING, SHOP APPLIED (3.5 TONS)".

24. AFTER SUPERSTRUCTURE STEEL HAS BEEN ERECTED, ELEVATIONS ALONG THE TOP OF THE GIRDERS SHALL BE TAKEN AS DIRECTED BY THE RESIDENT ENGINEER FOR USE IN DETERMINING FINISHED GRADES.

25. FLEMING BRACKETS OR SIMILAR FALSEWORK SHALL BE SPACED AS REQUIRED BY DESIGN, BUT SHALL BE LIMITED TO A MAXIMUM SPACING OF 4 FEET. THE DESIGN OF FALSEWORK SHALL BE THE RESPONSIBILITY OF THE CONTRACTOR.

26. ANY BOLT HOLES IN THE WEBS OF FASCIA GIRDERS NOT OTHERWISE FILLED SHALL BE FILLED WITH BUTTON HEAD OR HEX HEAD BOLTS. THE BOLTS SHALL BE TIGHTENED IN ACCORDANCE WITH SUBSECTION 506.19 OF THE STANDARD SPECIFICATIONS.

27. ENDS OF GIRDERS ARE TO BE VERTICAL IN FINAL POSITION.

28. ALL PILES SHALL BE FURNISHED WITH REINFORCED PILE POINTS. SEE SUBSECTION 505.04 (e) OF THE VAOT STANDARD SPECIFICATIONS.

CONCRETE

29. ABUTMENTS, PIER, APPROACH SLABS, REINFORCED CONCRETE DROP INLETS AND HEADWALL CONCRETE SHALL BE HIGH PERFORMANCE, CLASS B AND SHALL BE PAID FOR UNDER ITEM 501.34, "CONCRETE, HIGH PERFORMANCE CLASS B". SUPERSTRUCTURE CONCRETE SHALL BE HIGH PERFORMANCE CLASS A AND SHALL BE PAID FOR UNDER ITEM 501.33, "CONCRETE, HIGH PERFORMANCE CLASS A".

30. SURFACES OF BRIDGE SEATS UNDER BEARING DEVICES SHALL BE LEVEL. ALL OTHER AREAS OF BRIDGE SEATS SHALL BE SLOPED 1/2 INCH PER FOOT. THE ENTIRE BRIDGE SEAT SURFACE SHALL BE GIVEN A FLOAT FINISH.

31. CONCRETE PORTIONS OF ABUTMENTS AND WINGWALLS ABOVE ADJACENT BRIDGE SEAT ELEVATIONS SHALL NOT BE PLACED UNTIL FINISH GRADES HAVE BEEN DETERMINED BY THE RESIDENT ENGINEER.

32. IN ACCORDANCE WITH SUBSECTION 506.23(A) OF THE STANDARD SPECIFICATIONS FOR CONSTRUCTION AND AS DIRECTED BY THE RESIDENT ENGINEER, THE CONTRACTOR SHALL TAKE MEASURES NECESSARY TO PROTECT ALL SUBSTRUCTURE CONCRETE FROM STAINING DUE TO OXIDE FORMATION ON THE STRUCTURAL STEEL PRIOR TO PLACEMENT OF THE DECK. THESE MEASURES WILL NOT BE PAID FOR SEPARATELY BUT SHALL BE CONSIDERED INCIDENTAL TO ITEM 501.34, "CONCRETE, HIGH PERFORMANCE CLASS B". ANY SUCH STAINING THAT OCCURS PRIOR TO DECK PLACEMENT SHALL BE REMOVED AT NO ADDITIONAL COST TO THE STATE.

33. ALL EXPOSED EDGES OF CONCRETE SHALL BE CHAMFERED 1 INCH X 1 INCH.

34. WATER REPELLENT, SILANE SHALL BE APPLIED TO ALL EXPOSED CONCRETE SURFACES EXCEPT THE UNDERSIDE OF THE DECK BETWEEN DRIP NOTCHES. THIS ALSO INCLUDES THE EXPOSED SURFACES OF THE EXISTING PIER AND ABUTMENTS THAT ARE NOT RECONSTRUCTED. EXISTING CONCRETE SURFACES TO RECEIVE SILANE WATERPROFING SHALL BE PRESSURE WASHED PRIOR TO APPLICATION OF SILANE. SURFACE MOISTURE REQUIREMENTS SHALL BE MET PRIOR TO WATERPROOFING. THIS WORK WILL BE INCIDENTAL TO ITEM 514.10, "WATER REPELLENT, SILANE".

35. JOINTS AND SCORE MARKS IN CONCRETE SHALL BE CONSTRUCTED AS SHOWN IN THE PLANS OR AS DIRECTED BY THE RESIDENT ENGINEER.

36. THE KEY IN CONCRETE CONSTRUCTION JOINTS SHALL BE MONOLITHIC AND CONTINUOUS FOR THE FULL LENGTH OF THE JOINT. UPWARD KEYS SHALL BE PLACED INTEGRALLY WITH THE CONCRETE BELOW THE JOINT.

37. ALL SUPERSTRUCTURE REINFORCING STEEL SHALL BE EPOXY COATED AND PAID FOR UNDER ITEM 507.17, "EPOXY COATED REINFORCING STEEL". CUTTING AND REPAIRING DAMAGED AREAS OF COATED REINFORCING STEEL SHALL BE PERFORMED IN ACCORDANCE WITH SUBSECTION 507.04 OF THE STANDARD SPECIFICATIONS.

38. MINIMUM COVER FOR REINFORCING STEEL SHALL BE AS INDICATED IN THE PLANS.

38. REINFORCING STEEL PLACEMENT TOLERANCES SHALL BE:
SPACING: +/- 1 INCH
CLEARANCE: +/- 1/4 INCH

MISCELLANEOUS

39. THE CONTRACTOR SHALL PLACE NEW CHAIN LINK FENCE AS SHOWN IN THE PLANS ADJACENT TO THE WASTEWATER TREATMENT FACILITY ROAD. THE NEW CHAIN LINK FENCE SHALL BE CONNECTED TO AND ALIGNED WITH THE EXISTING FENCE. THE EXISTING SECTION OF ANGLED FENCE SHALL BE REMOVED AND CAN BE REUSED AT THE END OF THE FENCE CLOSEST TO THE INTERSECTION OF DEAN ROAD. THIS WORK WILL BE INCIDENTAL TO ITEM 620.12, "CHAIN-LINK FENCE, 6 FT."

40. THE OPERATING RAILROAD WILL BE RESPONSIBLE FOR THE INSTALLATION, WIRING AND ACTIVATION OF THE NEW BASE AND SIGNAL HEAD SHOWN AT STATION 14+50 LEFT. THE CONTRACTOR WILL BE RESPONSIBLE FOR THE EXCAVATION AND BACKFILL FOR THIS WORK AND COORDINATING THE TIMING OF THE WORK WITH THE RAILROAD. THE EXCAVATION SHALL BE PAID FOR UNDER ITEM 204.20, "TRENCH EXCAVATION OF EARTH" AND THE BACKFILL SHALL BE DONE IN CONFORMANCE WITH SUBSECTION 601.08 AND PAID FOR AS ITEM 204.30, "GRANULAR BACKFILL FOR STRUCTURES."

41. EMULSIFIED ASPHALT SHALL BE APPLIED AT A RATE OF 0.02 GAL/SY OR AS DIRECTED BY THE ENGINEER ON ALL EXISTING PAVEMENT SURFACES, ON COLD PLANED SURFACES, AND BETWEEN ALL COURSES OF PAVEMENT.

42. THE CONTRACTOR SHALL DETERMINE THE MAXIMUM DRY DENSITY OF THE SUBBASE MATERIAL IN ACCORDANCE WITH THE VTRANS IN-HOUSE SPECIFICATION AOT-MRD-54. SEE SUBSECTION 301.06, "COMPACTION".

PROJECT NOTE SHEET

PROJECT NAME: POWNAL
PROJECT NUMBER: BRZ 1441(19) C/2

FILE NAME: /87e045/str/se045pn.dgn
PROJECT LEADER: ROGER WHITCOMB
DESIGNED BY: C. CARLSON
se045pn. i

PLOT DATE: 10-MAR-2008
DRAWN BY: C. CARLSON
CHECKED BY: D. PETERSON

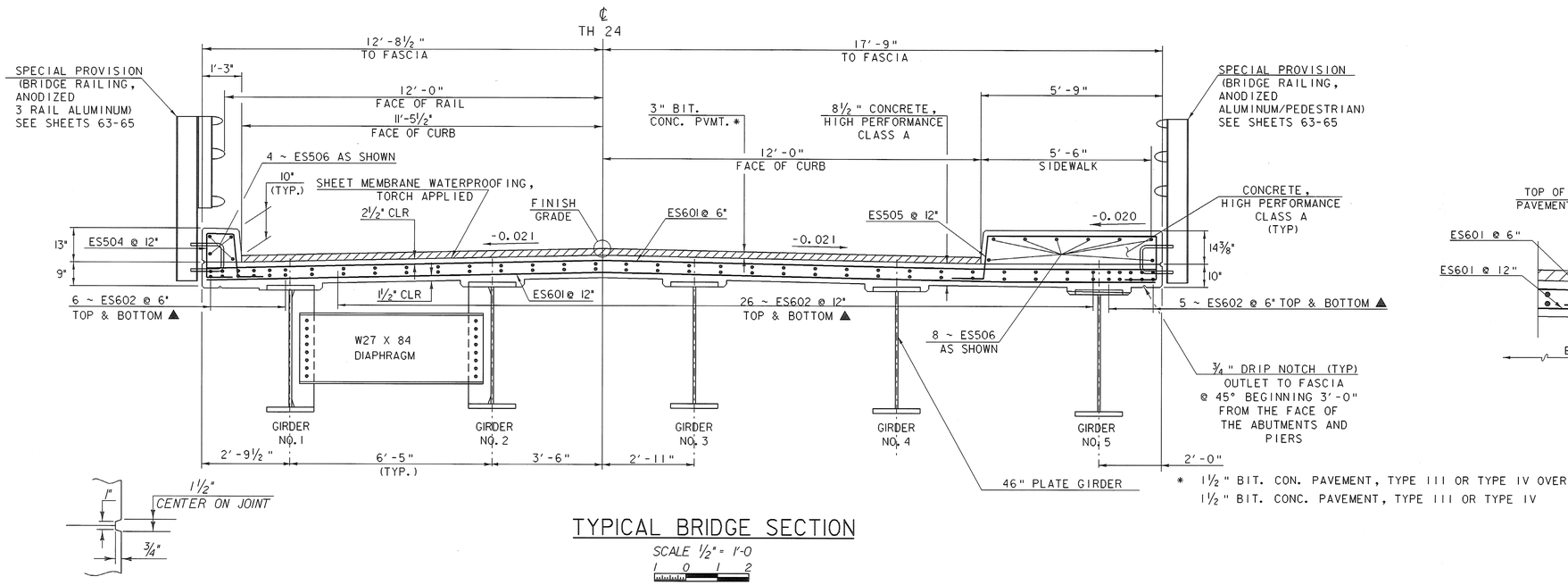

* 1½" BIT. CON. PAVEMENT, TYPE III OR TYPE IV OVER 1½" BIT. CONC. PAVEMENT, TYPE III OR TYPE IV

TYPICAL BRIDGE SECTION

SCALE ½" = 1'-0

SCORE MARK DETAIL

NTS

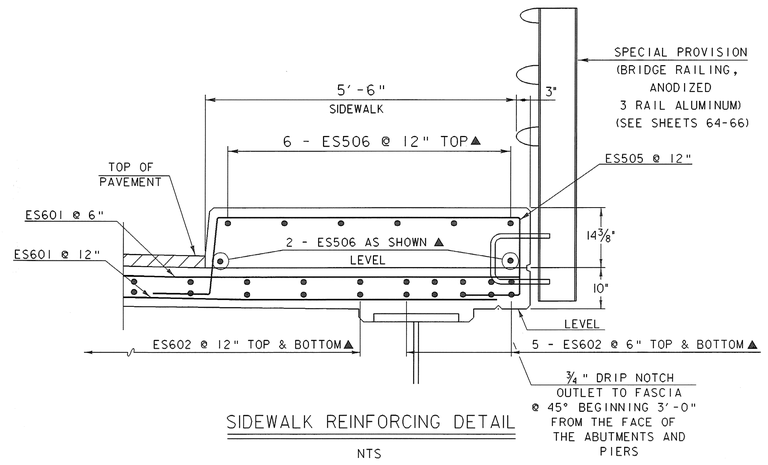

SIDEWALK REINFORCING DETAIL

NTS

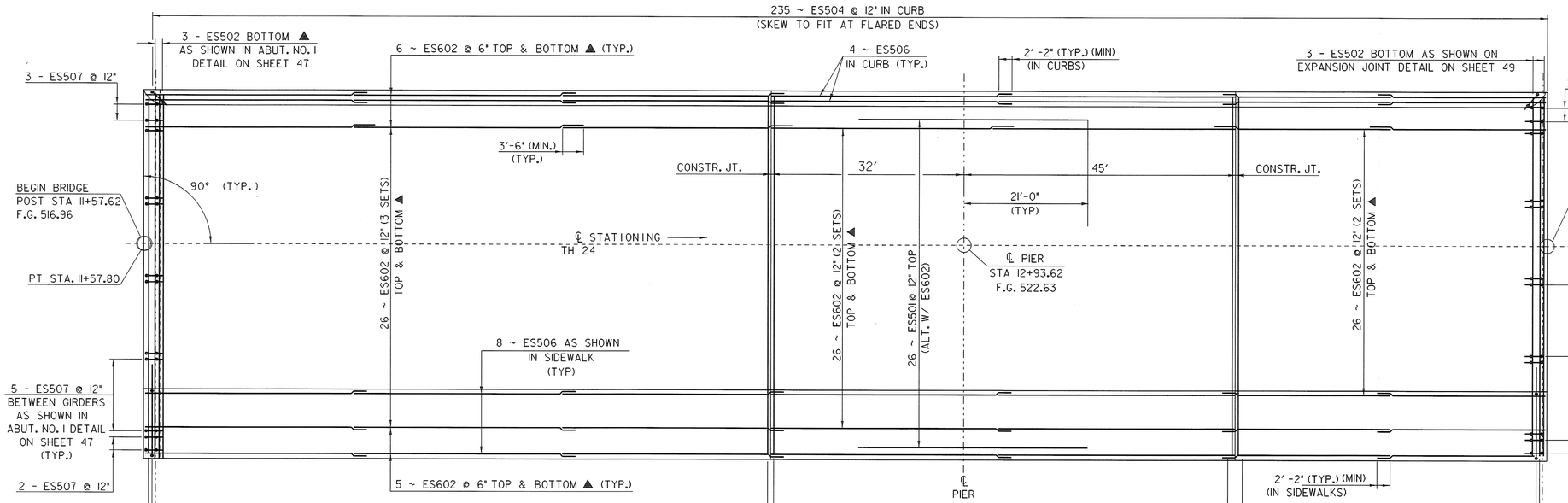

DECK REINFORCING PLAN

HORIZONTAL SCALE 1" = 10'-0"
VERTICAL SCALE 1" = 5'-0"

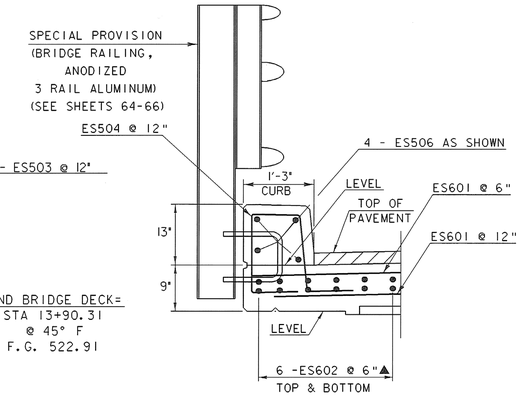

CURB REINFORCIING DETAIL

NTS

SHEET NAME: DECK REINFORCING PLAN			
PROJECT NAME: POWNAL		HIGHWAY NO.:	TH 24
PROJECT NUMBER: BRZ 1441(19) C/2		BRIDGE NO.:	41
		OVER:	HOOSIC RIVER
FILE NAME: /87e045/str/se045sup.dgn		PLOT DATE:	29-FEB-2008
PROJECT MANAGER: R. WHITCOMB		DRAWN BY:	T. FILLBACH
DESIGNED BY: T.FILLBACH/C.CARLSON		IPARM NAME:	se045supl.i
		SHEET 38 OF 108	

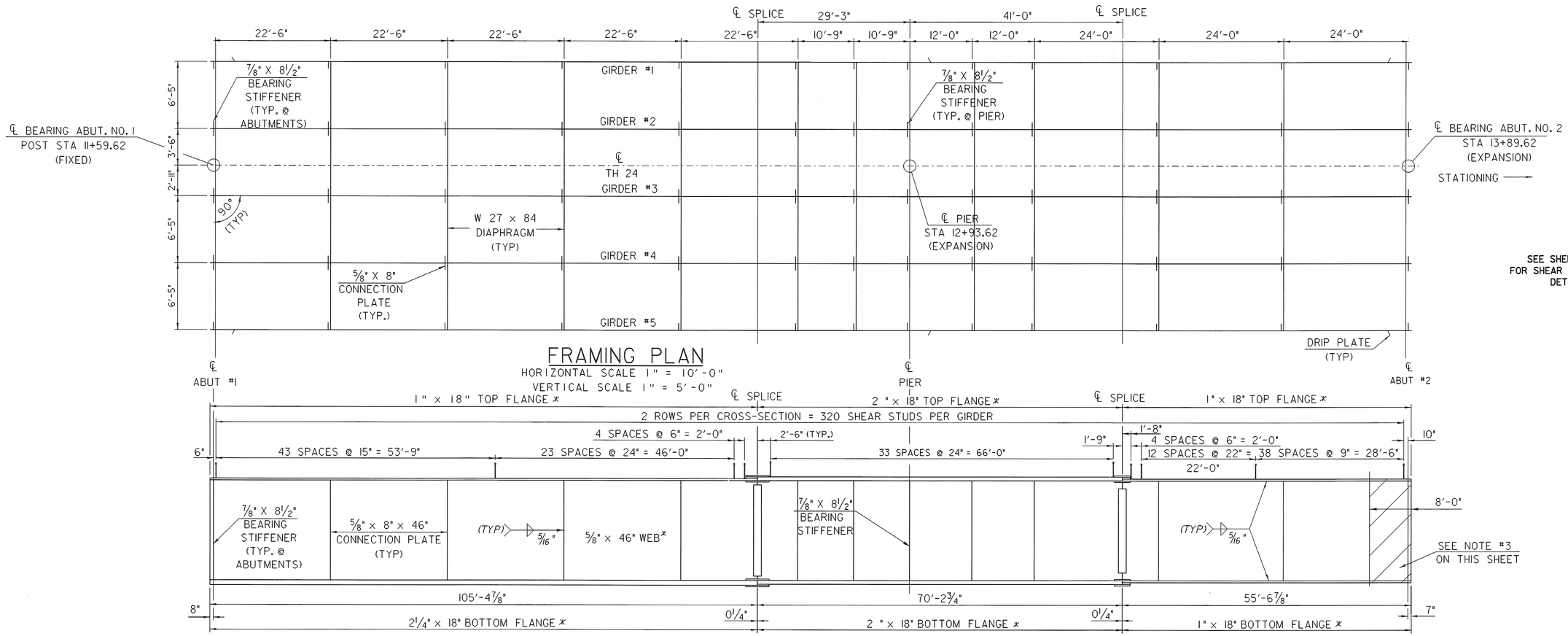

SEE SHEET 46
FOR SHEAR CONNECTOR
DETAILS

FRAMING PLAN

HORIZONTAL SCALE 1" = 10'-0"
VERTICAL SCALE 1" = 5'-0"

GIRDER ELEVATION

GIRDERS 1- 5

HORIZONTAL SCALE 1" = 10'-0"
VERTICAL SCALE 1" = 2'-0"

* CVN ~ CHARPY V NOTCH TESTING

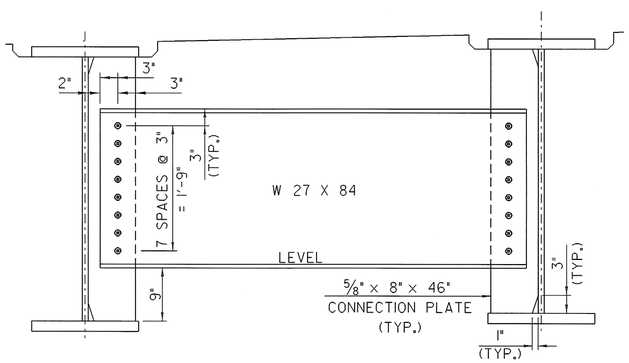

TYPICAL INTERMEDIATE DIAPHRAGM DETAIL

SCALE 1" = 1'-0"

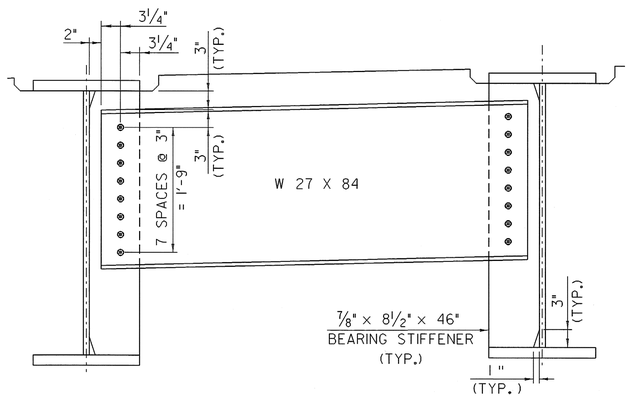

TYPICAL ABUTMENT DIAPHRAGM DETAIL

SCALE 1" = 1'-0"

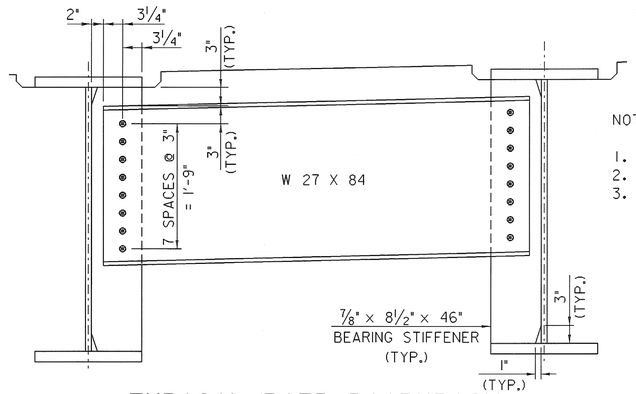

TYPICAL PIER DIAPHRAGM DETAIL

SCALE 1" = 1'-0"

NOTES:

1. SEE SHEET 41 FOR SPLICE DETAILS.
2. SEE SHEET 40 FOR DRIP PLATE DETAILS.
3. ALL STRUCTURAL STEEL SHALL BE UNPAINTED EXCEPT AS DESCRIBED IN PROJECT NOTES ON SHEET 37.

SHEET NAME: FRAMING PLAN		
PROJECT NAME: POWNAL		HIGHWAY NO.: TH 24
PROJECT NUMBER: BRZ 1441(19) C/2		BRIDGE NO.: 41
		OVER: HOOSIC RIVER
FILE NAME: /87e045/str/se045sup.dgn		PLOT DATE: 08-FEB-2008
PROJECT MANAGER: R. WHITCOMB		DRAWN BY: T. FILLBACH
DESIGNED BY: T.FILLBACH/C.CARLSON		IPARM NAME: se045sup2.i
		SHEET 39 OF 108

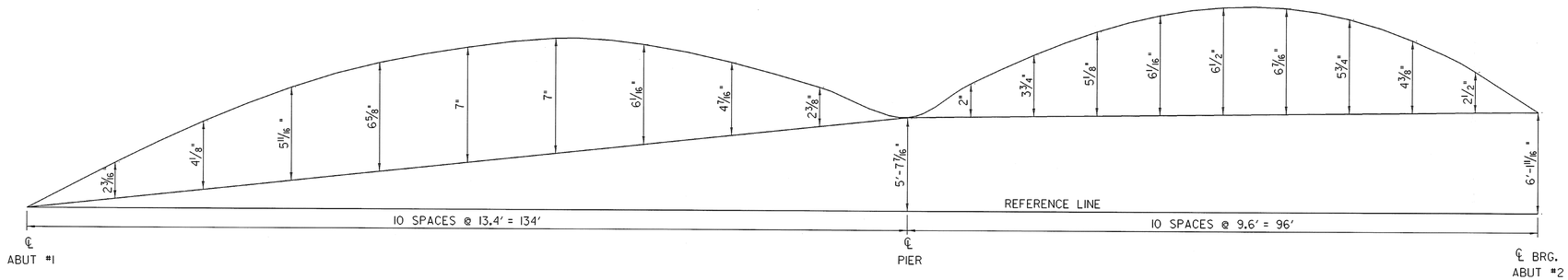

CAMBER DIAGRAM

NO SCALE

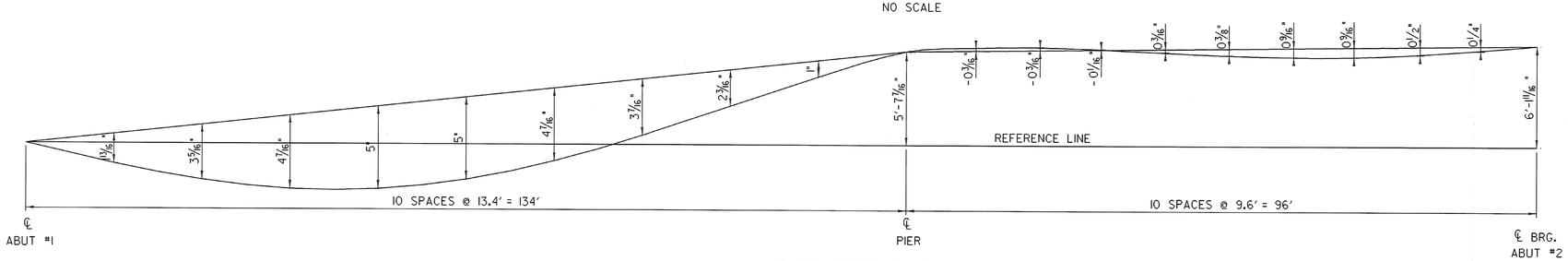

DEAD LOAD DEFLECTION DIAGRAM

NO SCALE

NOTES:

CAMBER AND DEFLECTION MEASUREMENTS ARE GIVEN @ TENTH POINTS. MEASUREMENTS INCLUDE GIRDER SELFWEIGHT.

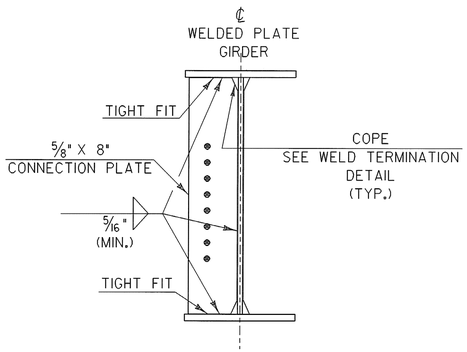

INTERMEDIATE CONNECTION PLATES FOR WELDED PLATE GIRDERS

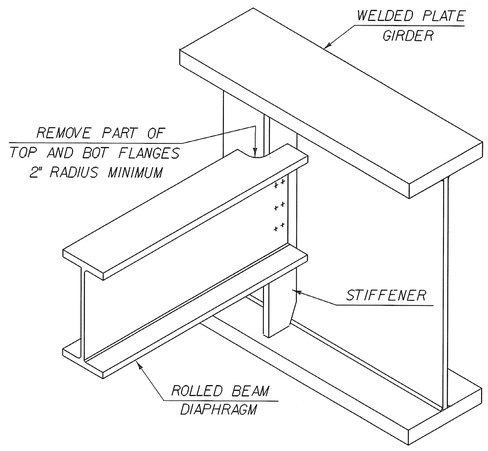

SEE CONTRACT DRAWINGS FOR SIZES OF MEMBERS AND CONNECTION DETAILS

ROLLED BEAM USED AS DIAPHRAGM

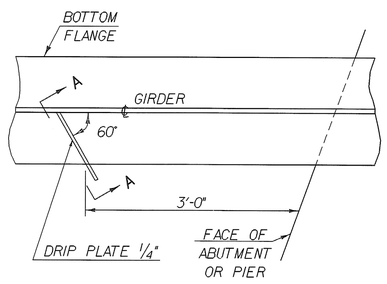

PLAN DRIP PLATE

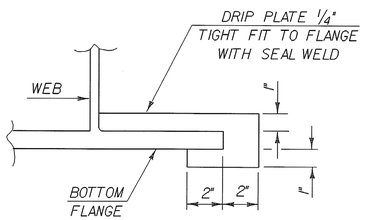

SECTION A - A

NOTE: DRIP PLATES SHALL BE PLACED ON THE OUTSIDE EDGE OF FASCIA GIRDERS ON THE HIGH SIDE OF THE PIER AND AT BOTH ABUTMENTS.

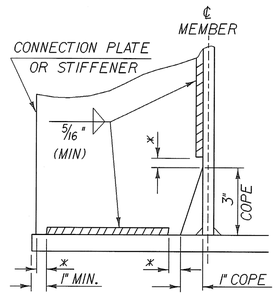

WELD TERMINATION AND COPING DETAILS FOR STEEL MEMBERS

* NO WELD FOR 3/8" MIN. 7/8" MAX. (EXCEPT MUST MAINTAIN 1" MINIMUM FROM EDGE OF FLANGE)

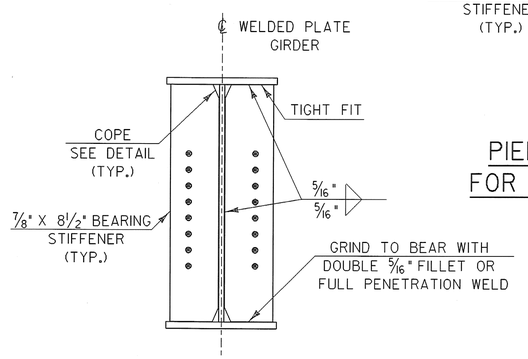

ABUTMENT BEARING STIFFENERS FOR WELDED PLATE GIRDERS

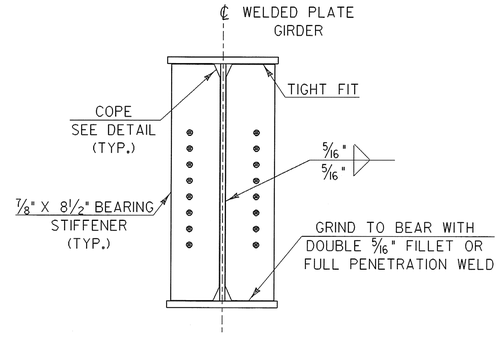

PIER BEARING STIFFENERS FOR WELDED PLATE GIRDERS

SHEET NAME:	SUPERSTRUCTURE DETAILS SHEET 1		
PROJECT NAME:	POWNAL	HIGHWAY NO.:	TH 24
PROJECT NUMBER:	BRZ 1441(19) C/2	BRIDGE NO.:	41
		OVER:	HOOSIC RIVER
FILE NAME:	/87e045/str/se045sup.dgn	PLOT DATE:	08-FEB-2008
PROJECT MANAGER:	R. WHITCOMB	DRAWN BY:	T. FILLBACH
DESIGNED BY:	T.FILLBACH/C.CARLSON	IPARM NAME:	se045sup3.i
		SHEET 40	OF 108

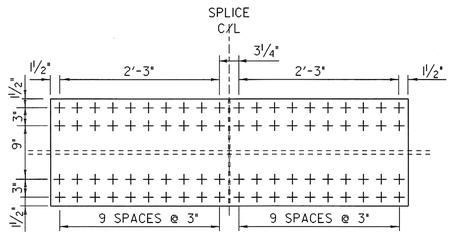

PLAN VIEW
TOP & BOTTOM
(TYP)

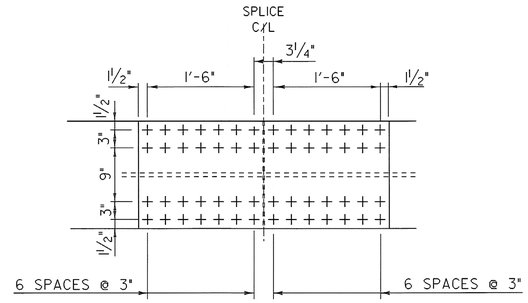

PLAN VIEW
TOP & BOTTOM
(TYP)

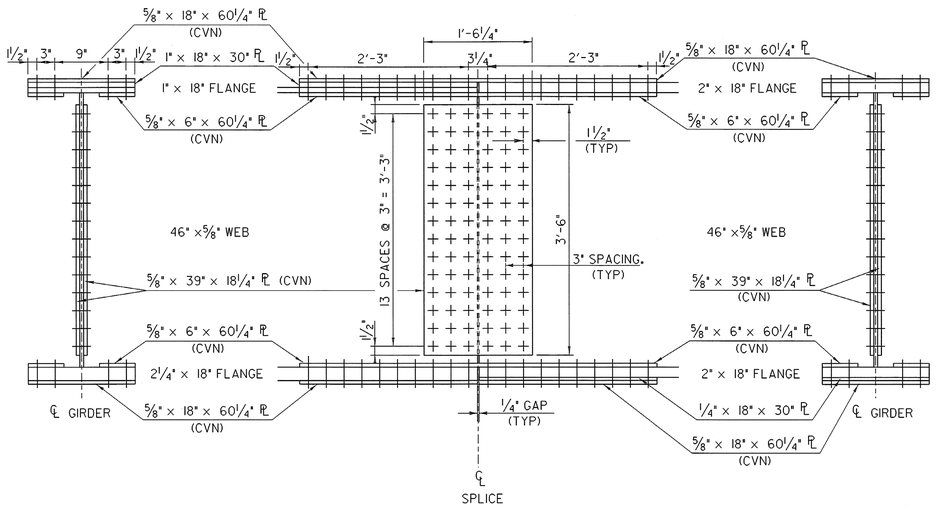

SPLICE DETAIL SPAN #1

SCALE 1" = 1'-0

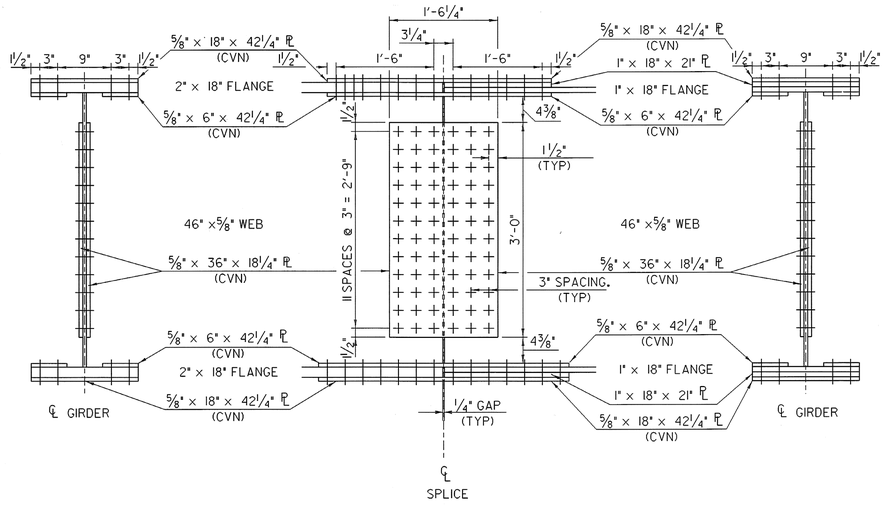

SPLICE DETAIL SPAN #2

SCALE 1" = 1'-0

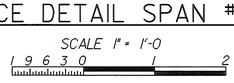

SHEET NAME: SUPERSTRUCTURE DETAILS SHEET 2	
PROJECT NAME: POWNAL PROJECT NUMBER: BRZ 1441(19) C/2	HIGHWAY NO.: TH 24 BRIDGE NO.: 41 OVER: HOOSIC RIVER
FILE NAME: /87e045/str/se045sup.dgn PROJECT MANAGER: R. WHITCOMB DESIGNED BY: T.FILLBACH/C.CARLSON	PLOT DATE: 08-FEB-2008 DRAWN BY: T. FILLBACH IPARM NAME: se045sup4.i SHEET 41 OF 108

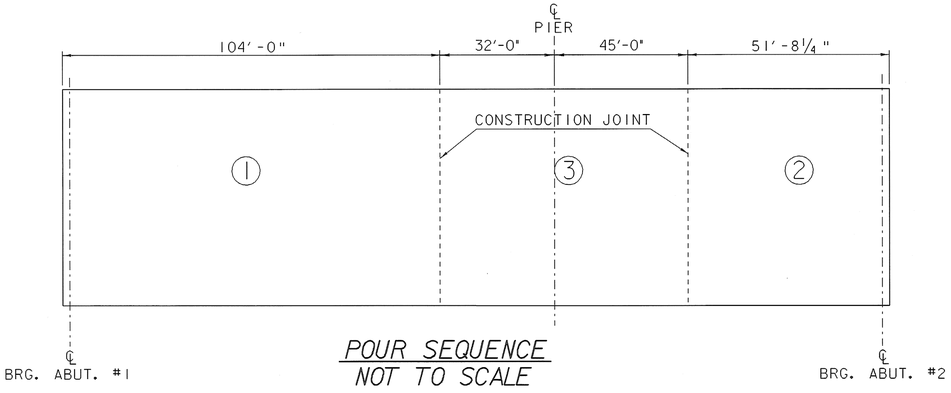

POUR SEQUENCE
NOT TO SCALE

POUR SEQUENCE NOTES:

1. ①,②AND③INDICATE THE SEQUENCE IN WHICH THE SECTIONS ARE TO BE POURED. A MINIMUM OF 96 HOURS BETWEEN POURS IS REQUIRED.
2. POUR ①AND②MAY BE MADE IN THE SAME DAY.
3. IF APPROVED BY THE ENGINEER, ENTIRE DECK MAY BE POURED THE SAME DAY PROVIDED THAT THE MAXIMUM TIME SPAN OF THE POUR IS 8 HOURS AND A RETARDING ADMIXTURE IS USED SO THAT THE DECK CONCRETE WILL NOT SET UP UNTIL ALL THE POUR HAS BEEN MADE. THE ADMIXTURE WILL BE INCIDENTAL TO THE ITEM, "CONCRETE, HIGH PERFORMANCE CLASS A".
4. TRANSVERSE BRIDGE SLAB CONSTRUCTION JOINTS, AS SHOWN ON THIS SHEET SHALL BE USED BETWEEN ADJACENT DECK POURS.
5. ALL POURS SHALL START FROM THE LOW END OF EACH POUR.

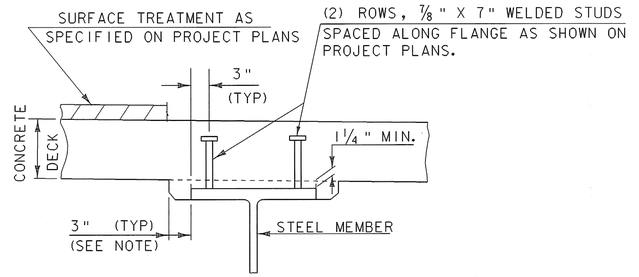

NOTE: THE 3" HORIZONTAL SECTION MAY BE ELIMINATED FOR FORMING SYSTEMS DESIGNED FOR THE CONSTRUCTION OF VERTICAL HAUNCHES. SYSTEMS SHALL BE SUBMITTED FOR APPROVAL TO THE STRUCTURES ENGINEER. ALL VOIDS SHALL BE FILLED WITH POLYURETHANE JOINT SEALER OR AN EQUIVALENT PRODUCT FROM THE APPROVED PRODUCTS LIST. COST SHALL BE INCIDENTAL TO ADJACENT CONCRETE ITEM

HAUNCH AND SHEAR CONNECTOR DETAILS

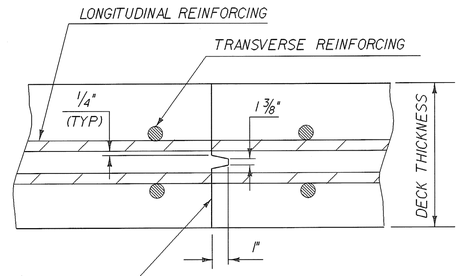

TRANSVERSE BRIDGE SLAB
CONSTRUCTION JOINT DETAILS

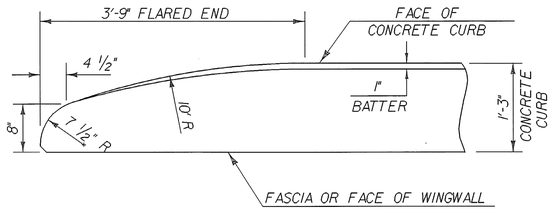

FLARED END DETAIL FOR 1'-3" CURB

CURB REINFORCING STIRRUP BARS SHALL BE TURNED AS REQUIRED TO FIT FLARED ENDS.

CURB NOTES:

1. CURBS AND SIDEWALKS MAY BE POURED IN ONE CONTINUOUS POUR (EXCEPT JOINTS ARE TO BE PLACED AT CENTER OF PIER AND 10' EACH SIDE OF PIER CENTER LINE.) HOWEVER, AN APPROVED SHRINKAGE REDUCING ADMIXTURE MUST BE USED. PAYMENT FOR THE ADMIXTURE SHOULD BE INCLUDED IN ITEM 501.33, "CONCRETE, HIGH PERFORMANCE, CLASS A".
2. CONSTRUCTION JOINTS SHALL BE 1' - 9" MINIMUM FROM THE CENTER OF THE NEAREST BRIDGE RAIL POST. CONCRETE SHALL BE PLACED IN ALTERNATE SECTIONS WITH A MINIMUM OF 48 HOURS BETWEEN ADJACENT POURS
3. LONGITUDINAL REINFORCING SHALL PASS THROUGH CONCRETE CONSTRUCTION JOINTS. CURB REINFORCING STIRRUP BARS SHALL BE TURNED AS REQUIRED TO FIT FLARED ENDS.

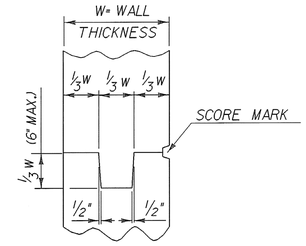

TYPICAL CONCRETE CONSTRUCTION JOINT

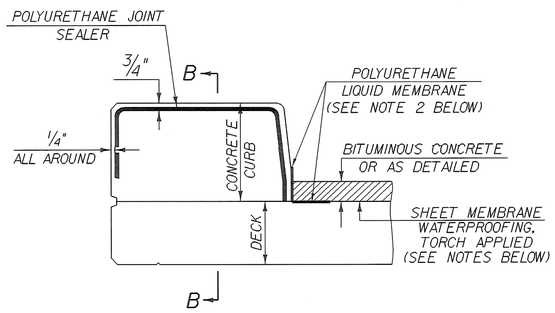

TYPICAL SECTION THROUGH
CONCRETE CURB CONSTRUCTION JOINT

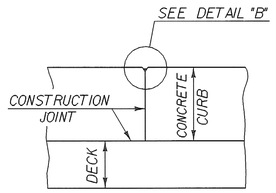

SECTION B - B

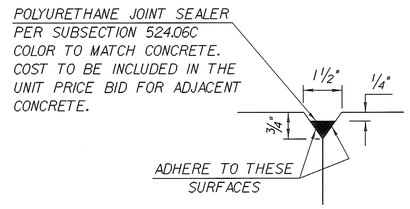

DETAIL "B"

SHEET MEMBRANE NOTES:

1. SUBSECTION 519.04 SURFACE PREPARATION:
   PREPARE THE SURFACE OF THE FACE OF THE CURB TO BE SEALED WITH POLYURETHANE LIQUID MEMBRANE IN THE SAME MANNER AS THE DECK.
2. POLYURETHANE LIQUID MEMBRANE:
   PAYMENT FOR ITEM 519.20 "SHEET MEMBRANE WATER PROOFING, TORCH APPLIED" INCLUDES POLYURETHANE LIQUID MEMBRANE.
3. SHEET MEMBRANE WATERPROOFING, TORCH APPLIED :
   EXTEND SHEET MEMBRANE WATERPROOFING TO FACE OF CURB.

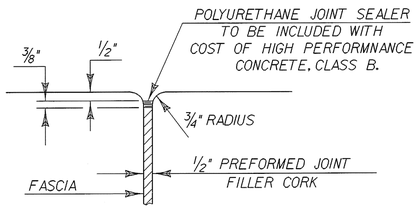

JOINT BETWEEN FASCIA
AND WINGWALL

SHEET NAME:	SUPERSTRUCTURE DETAILS SHEET 3		
PROJECT NAME:	POWNAL	HIGHWAY NO.:	TH 24
PROJECT NUMBER:	BRZ 1441(19) C/2	BRIDGE NO.:	41
		OVER:	HOOSIC RIVER
FILE NAME:	/87e045/str/se045sup.dgn	PLOT DATE:	10-MAR-2008
PROJECT MANAGER:	R. WHITCOMB	DRAWN BY:	T. FILLBACH
DESIGNED BY:	T.FILLBACH/C.CARLSON	IPARM NAME:	se045sup5.1
		SHEET	42 OF 108

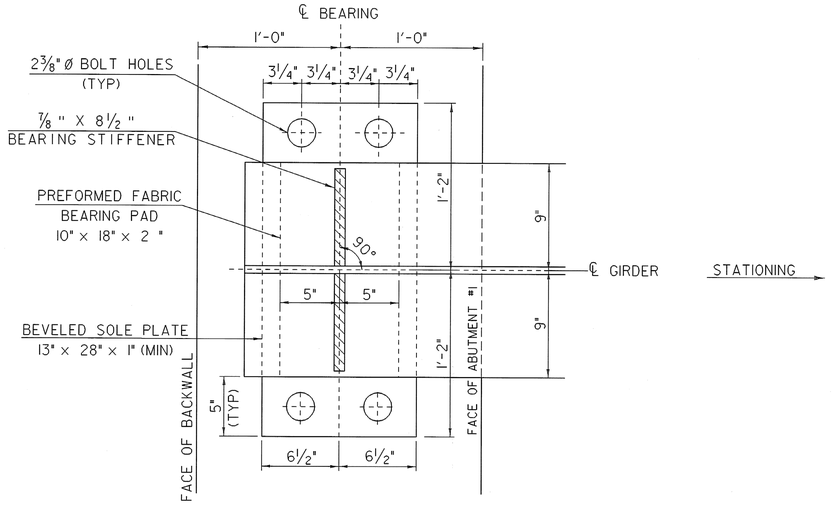

PLAN VIEW

SCALE 2" = 1'-0"

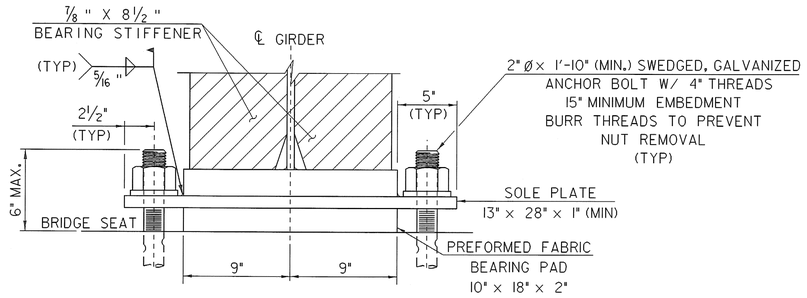

FIXED BEARING DETAILS @ ABUTMENT #1
FRONT VIEW

SCALE 2" = 1'-0"

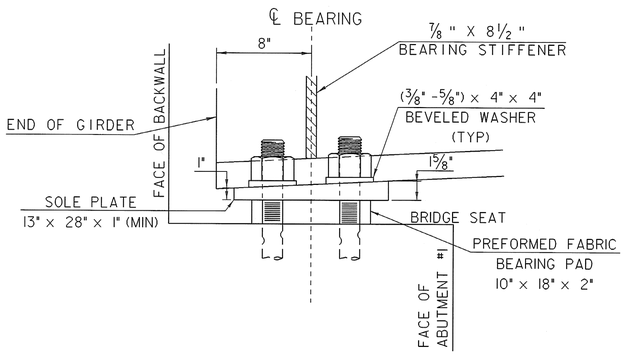

SIDE ELEVATION

SCALE 2" = 1'-0"

NOTE: SEE SHT. 44 FOR BEARING NOTES.

SHEET NAME: BEARING DETAILS SHEET 1		
PROJECT NAME: POWNAL	HIGHWAY NO.: TH 24	
PROJECT NUMBER: BRZ 1441(19) C/2	BRIDGE NO.: 41	
	OVER: HOOSIC RIVER	
FILE NAME: /87e045/str/se045sup.dgn	PLOT DATE: 08-FEB-2008	
PROJECT MANAGER: R. WHITCOMB	DRAWN BY: T. FILLBACH	
DESIGNED BY: T.FILLBACH/C.CARLSON	IPARM NAME: se045sup6.i	
	SHEET 43 OF 108	

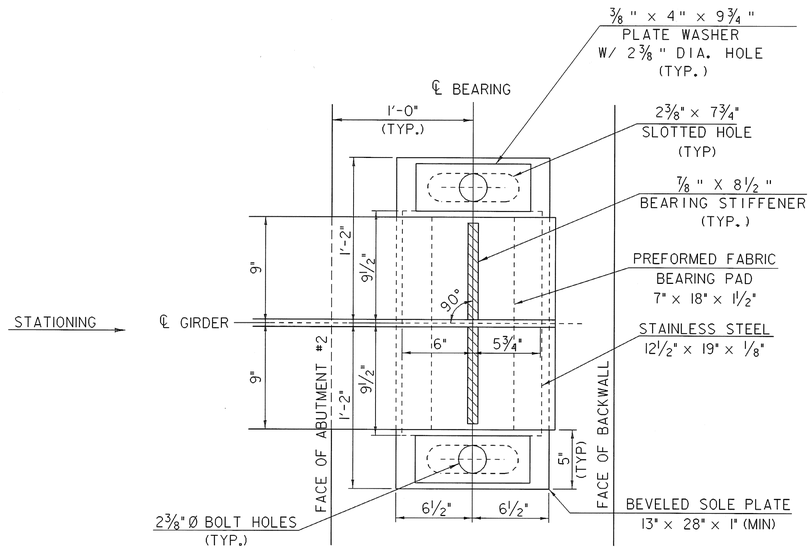

PLAN VIEW

SCALE 2" - 1'-0"

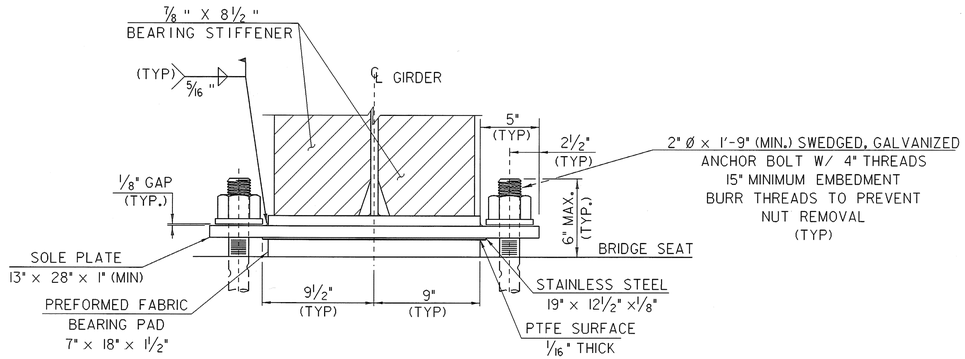

EXPANSION BEARING DETAILS @ ABUTMENT #2

FRONT VIEW

SCALE 2" = 1'-0"

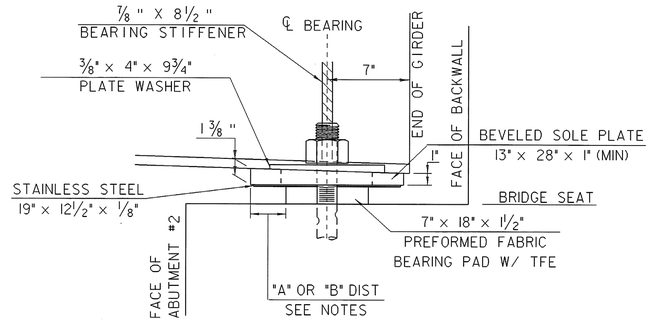

SIDE ELEVATION

SCALE 2" = 1'-0"

BEARING NOTES

1. BEARINGS SHALL CONFORM TO THE APPLICABLE PROVISIONS OF SECTIONS 531 AND 731 OF THE STANDARD SPECIFICATIONS.

2. BEARINGS AT ABUTMENTS SHALL BE PAID FOR UNDER ITEM 531.10 "BEARING DEVICE ASSEMBLY, PREFORMED FABRIC PAD".

3. FABRICATION DRAWINGS SHALL BE SUBMITTED AS PER STANDARD SPECIFICATION 531.03. THE SUBMITTAL SHALL INCLUDE ASSOCIATED WELDING AND BONDING PROCEDURES.

4. DESIGN CRITERIA: (ABUTMENTS)
   - A. DESIGN FABRIC PAD TO CONCRETE PRESSURE: 1000 PSI MAXIMUM
   - B. DESIGN ROTATION: 0.015 RADIANS MINIMUM
   - C. DESIGN VERTICAL LOAD @ ABUT. NO. 1 = 176 kips
     DESIGN VERTICAL LOAD @ ABUT. NO. 2 = 125 kips
   - D. DESIGN HORIZONTAL LOAD: MINIMUM 10% OF VERTICAL LOAD

5. THE "A" DISTANCE IS THE FINAL SETTING FOR THE BEARING PAD AFTER THE CONCRETE SLAB, CURB, PAVEMENT AND BRIDGE RAIL HAVE BEEN PLACED. THE "B" DISTANCE IS FOR SETTING THE BEARING AFTER THE STRUCTURAL STEEL IS ERECTED AND BEFORE THE CONCRETE DECK IS POURED. THE DIFFERENCE IS THE THEORETICAL ELONGATION OF THE BOTTOM FLANGE DUE TO DEAD LOAD DEFLECTION. THE FINAL "A" DISTANCE SHOWN IN THE TABLE MUST BE ATTAINED WITHIN 1/8 INCH.

6. THE CONCRETE SURFACE UNDER THE BEARING DEVICE SHALL BE LEVEL.

7. ANCHOR BOLTS FOR ALL BEARINGS ON THIS PROJECT SHALL HAVE A MINIMUM 15 INCHES EMBEDMENT INTO THE CONCRETE AND SHALL CONFORM TO STANDARD SPECIFICATION 714.08 AND BE CLASS 8.8 (ASTM A449, TYPE 1).

8. ALL STEEL IN BEARING DEVICES (EXCEPT STAINLESS STEEL) SHALL BE GRADE 50.

9. ALL BEARING DEVICES SHALL BE GALVANIZED OR METALIZED AS PER STANDARD SPECIFICATIONS 506.15 AND 531.04(b). IF THE BEARINGS ARE METALIZED, THEY SHALL BE SEALED WITH AN APPROVED SEALER AS SPECIFIED IN SUBSECTION 506.15. AREAS OF GALVANIZING OR METALIZING DAMAGED BY FIELD WELDING OR HANDLING SHALL BE REPAIRED IN CONFORMANCE WITH ASTM A-760.

10. ALL ANCHOR BOLTS, NUTS AND WASHERS SHALL BE GALVANIZED. ALL WASHERS SHALL BE 3/8 INCH PLATE MINIMUM. PAYMENT FOR ANCHOR BOLTS, NUTS, WASHERS AND THEIR INSTALLATIONS SHALL BE INCLUDED IN THE UNIT PRICE BID FOR ITEM 531.10, "BEARING DEVICE ASSEMBLY, PREFORMED FABRIC PAD".

SETTING TABLE @ ABUTMENT #2

TEMP	"A" DIST	"B" DIST
-30° F	4 3/8	4 7/8
-15° F	4 1/16	4 9/16
0° F	3 13/16	4 5/16
15° F	3 9/16	4 1/16
30° F	3 1/4	3 3/4
45° F	3	3 1/2
60° F	2 3/4	3 1/4
75° F	2 7/16	2 15/16
90° F	2 3/16	2 11/16
105° F	1 15/16	2 7/16
120° F	1 5/8	2 1/8

SHEET NAME: BEARING DETAILS SHEET 2

PROJECT NAME: POWNAL
PROJECT NUMBER: BRZ 1441(19) C/2

HIGHWAY NO.: TH 24
BRIDGE NO.: 41
OVER: HOOSIC RIVER

FILE NAME: /87e045/str/se045sup.dgn
PROJECT MANAGER: R. WHITCOMB
DESIGNED BY: T.FILLBACH/C.CARLSON

PLOT DATE: 03-MAR-2008
DRAWN BY: T. FILLBACH
IPARM NAME: se045sup7.i
SHEET 44 OF 108

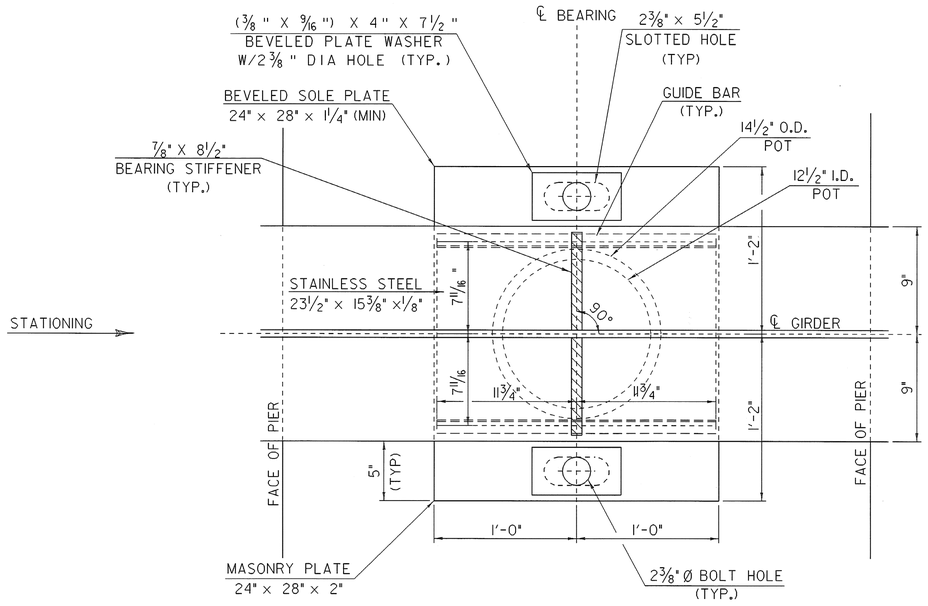

PLAN VIEW

SCALE 2" = 1'-0"

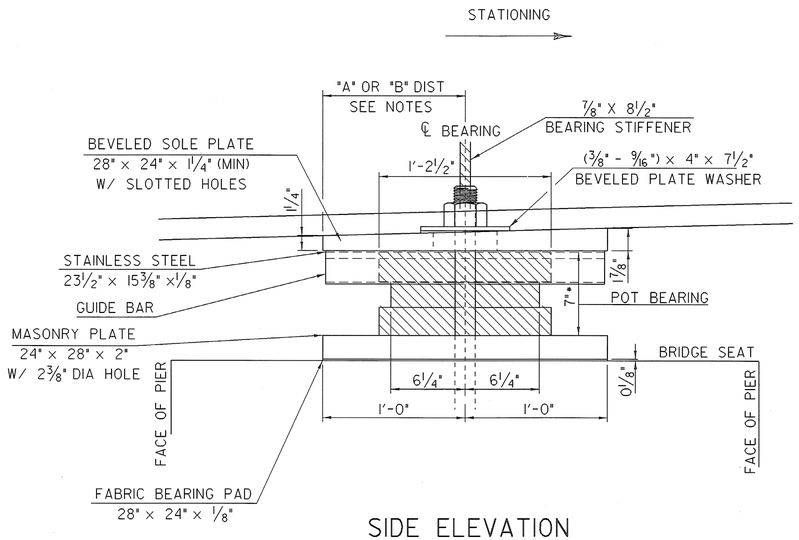

SIDE ELEVATION

SCALE 2" = 1'-0"

STATIONING

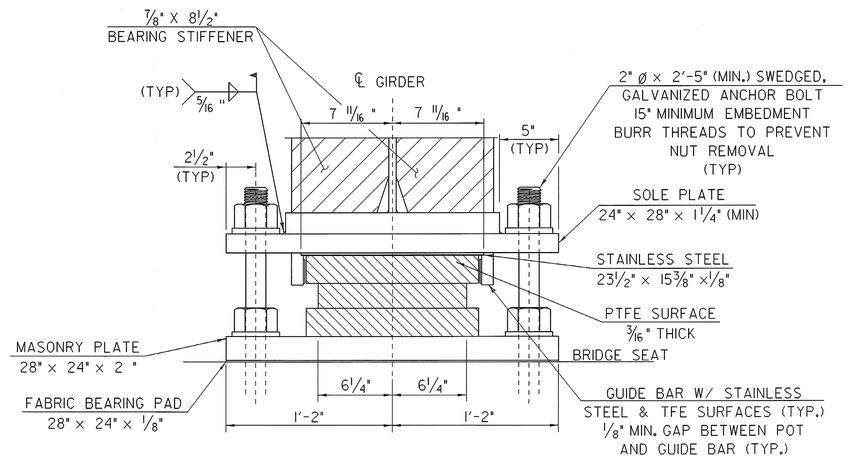

EXPANSION BEARING DETAILS @ PIER

FRONT VIEW

SCALE 2" = 1'-0"

BEARING NOTES (PIER):

(SEE SHEET 43 FOR ADDITIONAL NOTES)

1. BEARING BASE PLATES SHALL BE PLACED ON A 1/8" FABRIC PAD AS SPECIFIED IN SUBSECTION 731.02.

2. BEARING DEVICES AT PIER SHALL BE PAID FOR AT THE UNIT BID PRICE EACH FOR ITEM 531.12, BEARING DEVICE ASSEMBLY, POT.

3. DESIGN CRITERIA:
   - A - UNFILLED T.F.E. BEARING SURFACE BEARING PRESSURE: 3500 psi
   - B - BASE PLATES TO CONCRETE BEAM SEAT BEARING PRESSURE: 1000 psi
   - C - ROTATION CAPACITY: 0.015 RADIANS (MINIMUM)

4. THE MANUFACTURER OF THE BEARING DEVICE ASSEMBLY, POT ITEM 531.12 SHALL, IN ADDITION TO THE TYPE D CERTIFICATION REQUIRED IN SECTION 731.10, CERTIFY THAT THE UNITS SUPPLIED ARE DESIGNED TO MEET THE LOADING REQUIREMENTS INDICATED BELOW.

VERTICAL	403 Kips
LONGITUDINAL	40 Kips
TRANSVERSE	40 Kips

5. THE MAXIMUM VARIATION FROM PARALLEL BETWEEN THE TOP AND BOTTOM SOLE PLATE OF THE BEARING SHALL BE 0.01 RADIANS.

6. ANCHOR BOLTS SHALL HAVE A MINIMUM 15 INCHES EMBEDMENT INTO THE CONCRETE AND SHALL CONFORM TO THE REQUIREMENT OF ASTM F 568M, CLASS 8.8 (ASTM A449, TYPE 1).

7. THE CONTRACTOR MAY SUBMIT DESIGNS FOR ALTERNATE POT BEARINGS FOR APPROVAL.

SETTING TABLE @ PIER

TEMP	"A" DIST	"B" DIST
-30°F	12 13/16	13 1/4
-15°F	12 5/8	13 1/16
0°F	12 1/2	12 15/16
15°F	12 5/16	12 3/4
30°F	12 3/16	12 5/8
45°F	12	12 7/16
60°F	11 13/16	12 1/4
75°F	11 11/16	12 1/8
90°F	11 1/2	11 15/16
105°F	11 3/8	11 11/16
120°F	11 5/16	11 5/8

* SEE FINAL FABRICATION DRAWINGS FOR EXACT DIMENSIONS. BRIDGE SEATS MAY NEED TO BE ADJUSTED.

SHEET NAME: BEARING DETAILS SHEET 3

PROJECT NAME: POWNAL
PROJECT NUMBER: BRZ 1441(19) C/2
HIGHWAY NO.: TH 24
BRIDGE NO.: 41
OVER: HOOSIC RIVER

FILE NAME: /87e045/str/se045sup.dgn
PROJECT MANAGER: R. WHITCOMB
DESIGNED BY: T.FILLBACH/C.CARLSON
PLOT DATE: 08-FEB-2008
DRAWN BY: T. FILLBACH
IPARM NAME: se045sup8.i
SHEET 45 OF 108

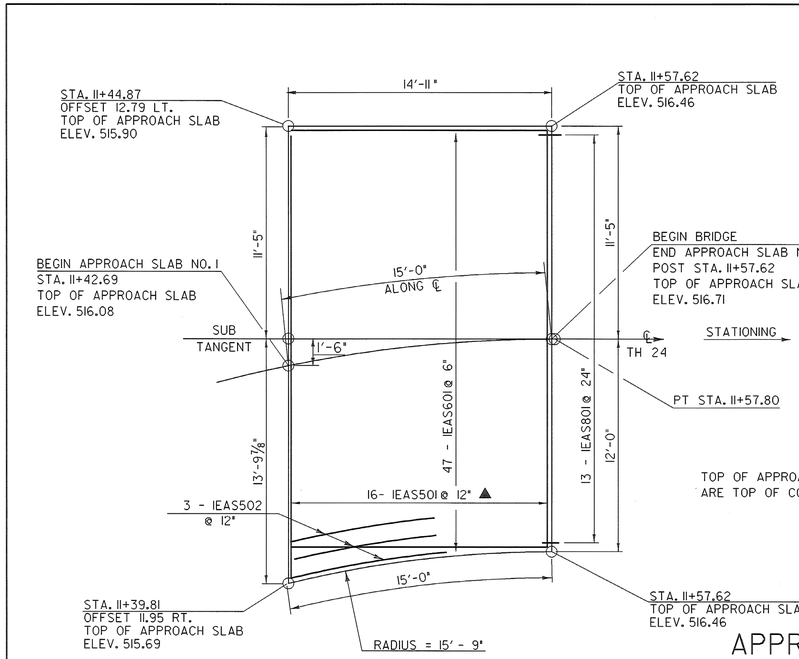

TOP OF APPROACH SLAB ELEVATIONS ARE TOP OF CONCRETE, NOT PAVEMENT

APPROACH SLAB PLAN

SCALE 1/4" = 1'-0

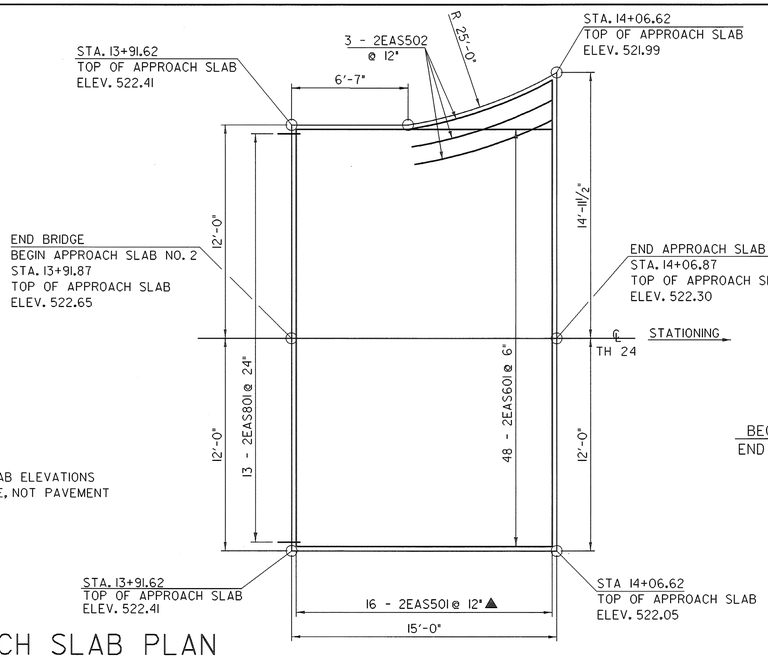

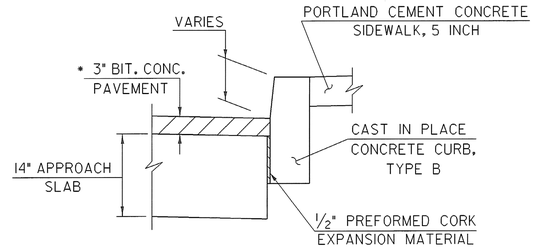

DETAIL "A"

SCALE 1" = 1'-0

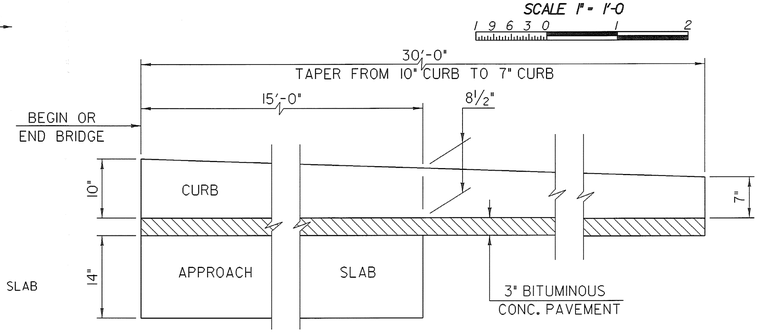

CURB TAPER

SCALE 1" = 1'-0

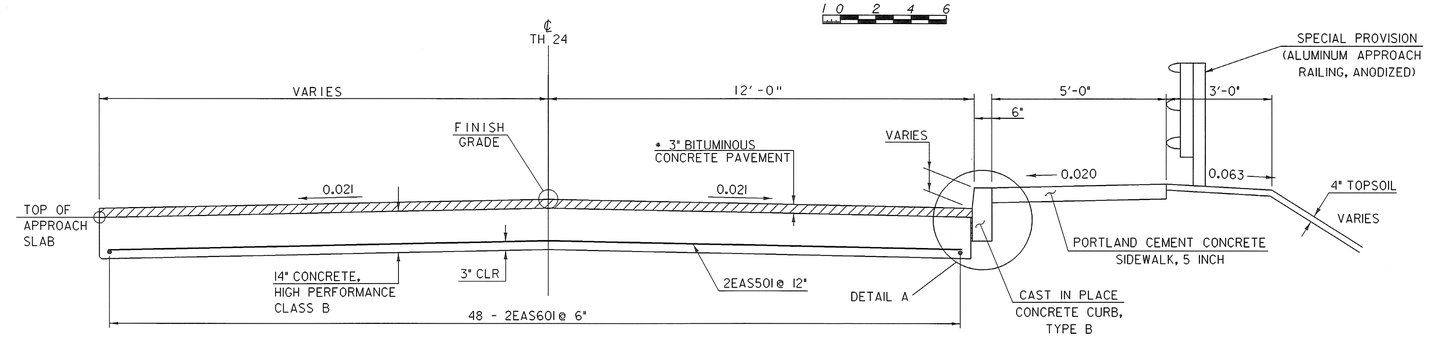

SCALE ½" = 1'-0

APPROACH SLAB NO. 2 SECTION

* 2 LIFTS OF BITUMINOUS CONCRETE (1½" EA.)

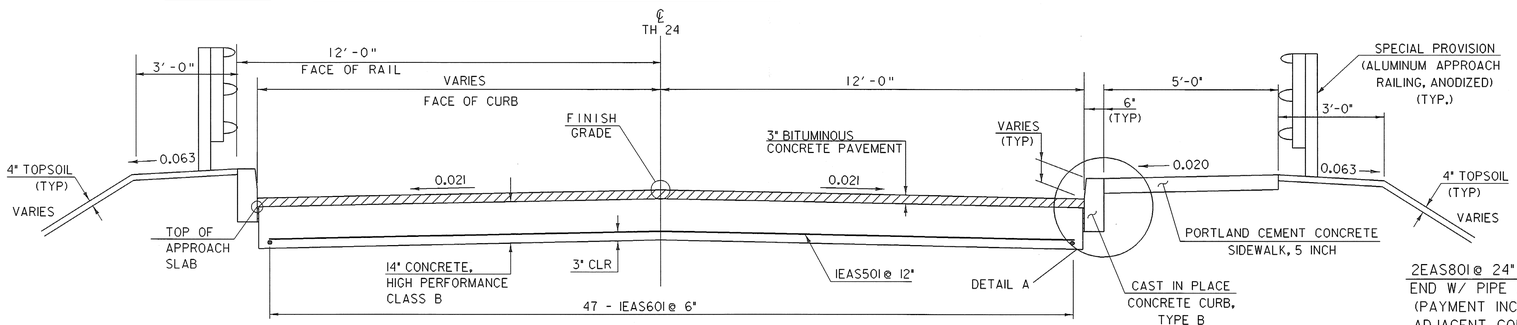

APPROACH SLAB NO. 1 SECTION

SCALE ½" = 1'-0

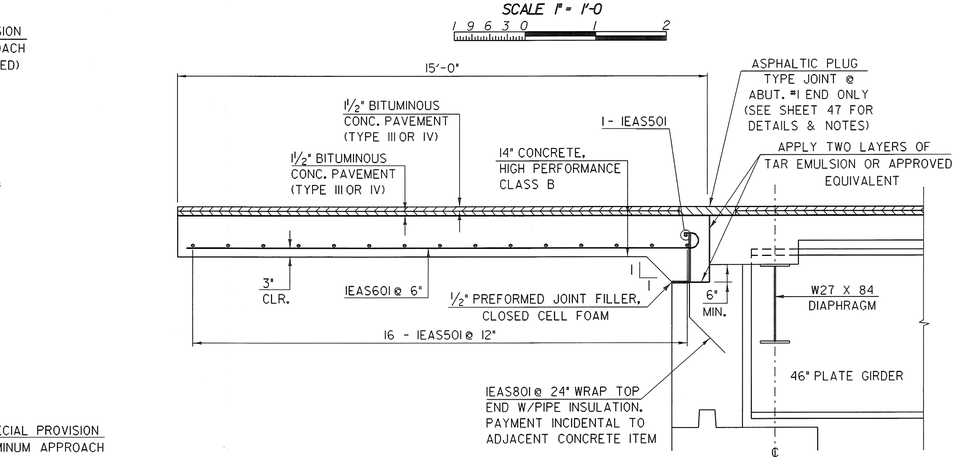

APPROACH SLAB DETAIL @ ABUT. NO. 1

SCALE ½" = 1'-0

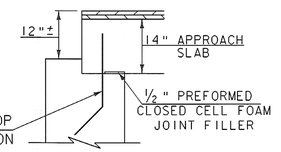

ABUTMENT NO. 2 DETAIL

NOT TO SCALE

SHEET NAME: APPROACH SLAB DETAILS	
PROJECT NAME: POWNAL	HIGHWAY NO.: TH 24
PROJECT NUMBER: BRZ 1441(19) C/2	BRIDGE NO.: 41
	OVER: HOOSIC RIVER
FILE NAME: /87e045/str/se045sup.dgn	PLOT DATE: 29-FEB-2008
PROJECT MANAGER: R. WHITCOMB	DRAWN BY: T. FILLBACH
DESIGNED BY: T.FILLBACH/C.CARLSON	IPARM NAME: se045sup9.i
	SHEET 46 OF 108

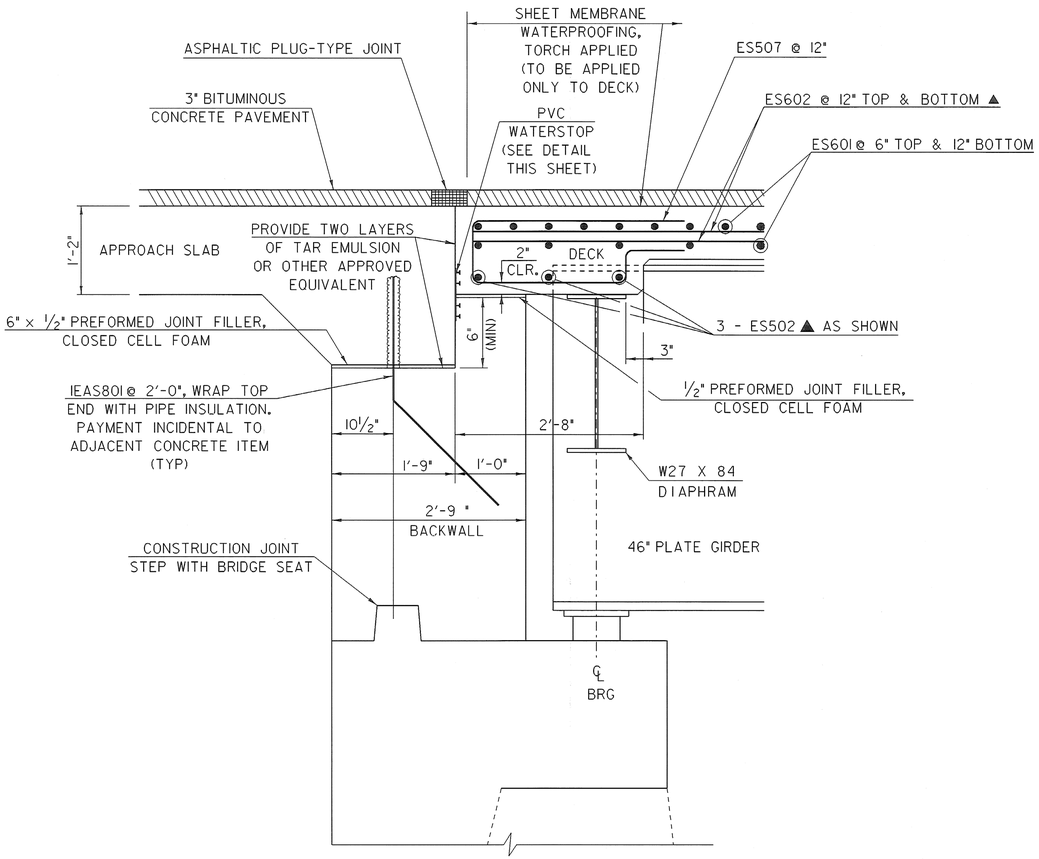

BRIDGE END @ ABUTMENT NO. 1

SCALE 1" = 1'-0

1 9 6 3 0 1 2

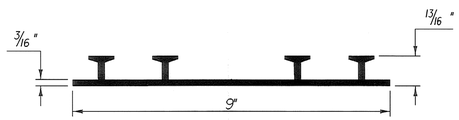

P.V.C. WATERSTOP FOR CONSTRUCTION JOINTS

THE COSTS FOR P.V.C.WATERSTOP SHALL BE INCLUDED IN THE UNIT PRICE BID FOR CONCRETE. OTHER CONFIGURATIONS MAY BE USED UPON APPROVAL OF THE STRUCTURES ENGINEER.

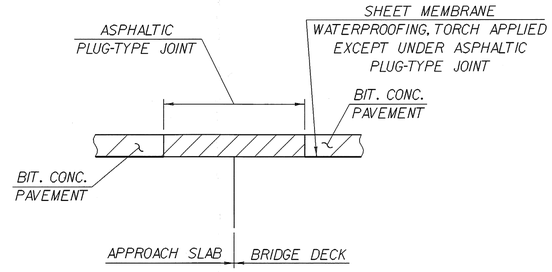

ASPHALTIC PLUG-TYPE JOINT DETAIL

NTS

ASPHALTIC PLUG BRIDGE JOINT NOTES

1. INSTALLATION
   - A. THE JOINT SHALL BE LOCATED CENTRALLY OVER THE DECK OVERLAY FIXED JOINT MARKED OUT TO THE MANUFACTURER'S RECOMMENDED WIDTH.
   - B. THE JOINT SHALL BE EXCAVATED AS SHOWN ON THE PLANS BY USE OF SAWS AND PNEUMATIC HAMMER OR A HAMMER AND CHISEL.
   - C. THE JOINT AREA SHALL BE BLAST CLEANED OF DEBRIS AND ASPHALT. THE JOINT AREA SHALL BE THOROUGHLY DRIED USING HOT COMPRESSED AIR PRIOR TO APPLYING BINDER MATERIAL.
   - D. SPALLED AND DEFECTIVE CONCRETE SHALL BE REPAIRED WITH AN APPROVED MATERIAL AS AGREED UPON BY THE ENGINEER.
   - E. THE BINDER MATERIAL SHALL BE HEATED AND PLACED AS RECOMMENDED BY THE MANUFACTURER.
   - F. THE BINDER MATERIAL AND AGGREGATE SHALL BE HEATED AND MIXED AS RECOMMENDED BY THE MANUFACTURER.
   - G. THE INSTALLATION OF MATERIAL, COMPACTION, AND TOP COATING SHALL BE AS RECOMMENDED BY THE MANUFACTURER.
   - H. IMMEDIATELY AFTER TOP COATING, AN ANTI-SKID MATERIAL SHALL BE CAST OVER THE JOINT TO REDUCE THE RISK OF TRACKING.
   - I. JOINT SHALL BE PROTECTED FROM TRAFFIC UNTIL THE MATERIAL HAS COOLED TO 125 DEG. F +/-.

2. WEATHER LIMITATIONS. BINDER MATERIAL SHALL BE APPLIED ONLY WHEN THE FOLLOWING CONDITIONS PREVAIL:
   - A. THE AMBIENT AIR TEMPERATURE IS AT LEAST 50 DEG F AND RISING.
   - B. THE ROAD SURFACE IS SUFFICIENTLY DRY.
   - C. WEATHER CONDITIONS OR OTHER CONDITIONS ARE FAVORABLE AND ARE EXPECTED TO REMAIN SO FOR THE PERFORMANCE OF SATISFACTORY WORK.

SHEET NAME:	BRIDGE END DETAILS		
PROJECT NAME:	POWNAL	HIGHWAY NO.:	TH 24
PROJECT NUMBER:	BRZ 1441(19) C/2	BRIDGE NO.:	41
		OVER:	HOOSIC RIVER
FILE NAME:	/87e045/str/se045sup.dgn	PLOT DATE:	29-FEB-2008
PROJECT MANAGER:	R. WHITCOMB	DRAWN BY:	T. FILLBACH
DESIGNED BY:	T.FILLBACH/C.CARLSON	IPARM NAME:	se045sup10.i
		SHEET	47 OF 108

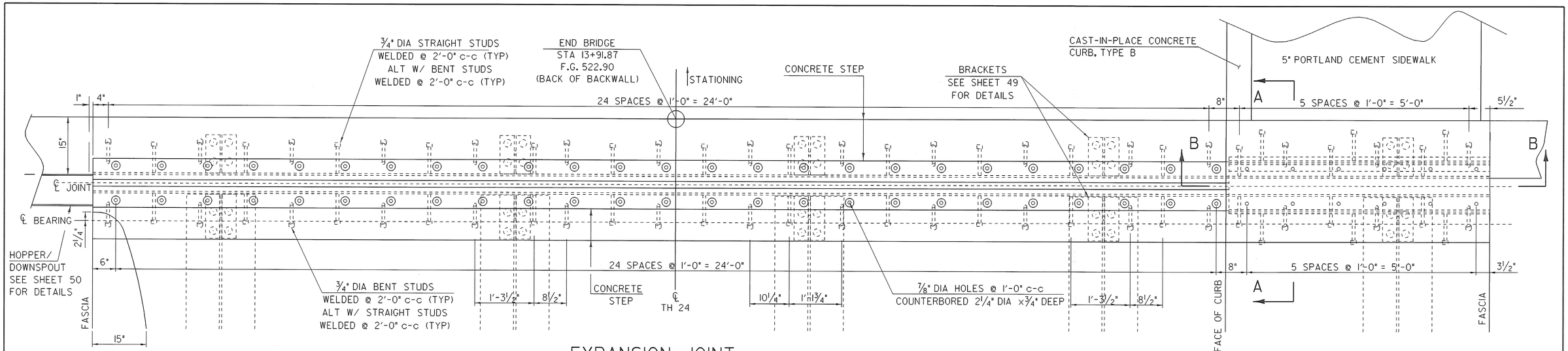

EXPANSION JOINT

SCALE 1" = 1'-0"

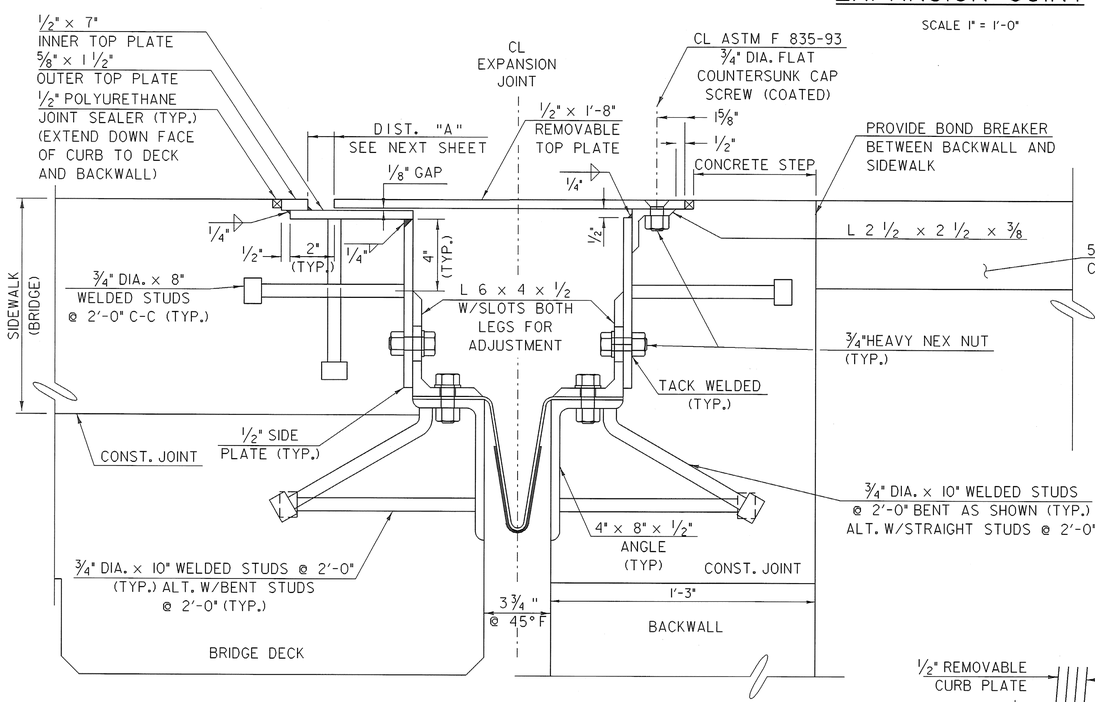

SECTION A-A THROUGH JOINT

SCALE 3" = 1'-0"

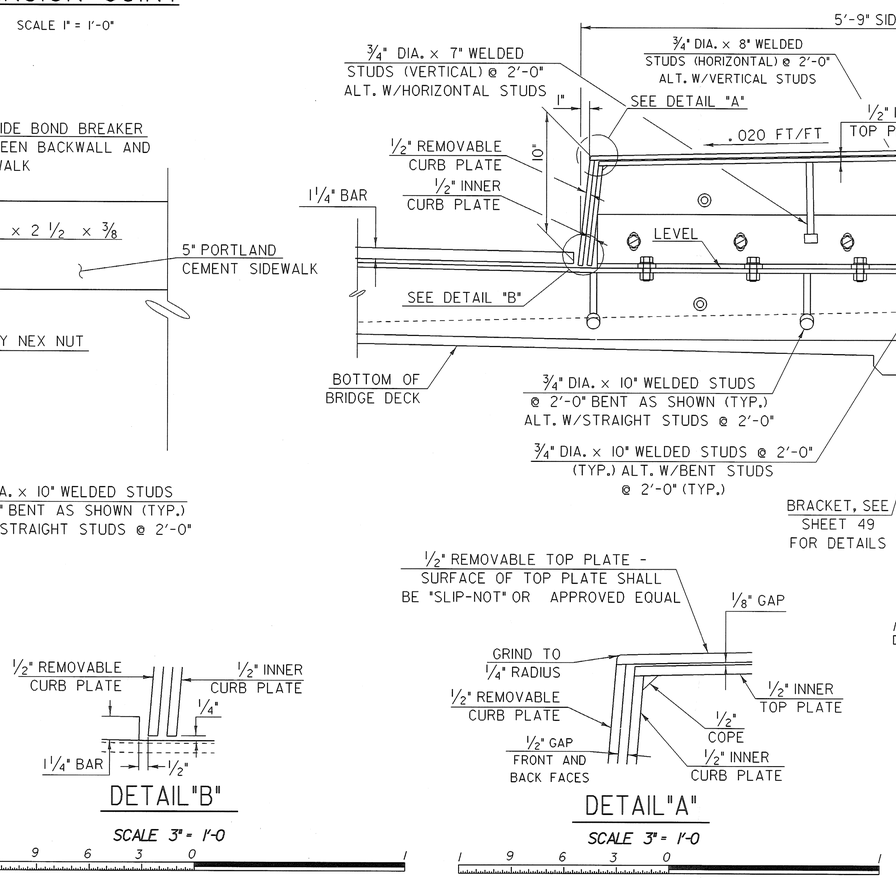

SECTION B-B

SCALE 1½" = 1'-0"

DETAIL "B"

SCALE 3" = 1'-0"

DETAIL "A"

SCALE 3" = 1'-0"

SHEET NAME:	EXPANSION JOINT DETAILS SHEET 1		
PROJECT NAME:	POWNAL	HIGHWAY NO.:	TH 24
PROJECT NUMBER:	BRZ 1441(19) C/2	BRIDGE NO.:	41
		OVER:	HOOSIC RIVER
FILE NAME:	/87e045/str/se045exp.dgn	PLOT DATE:	08-FEB-2008
PROJECT MANAGER:	R. WHITCOMB	DRAWN BY:	T. FILLBACH
DESIGNED BY:	T. FILLBACH/C. CARLSON	IPARM NAME:	se045expl.i
BRIDGE SHEET NUMBER:		SHEET	48 OF 108

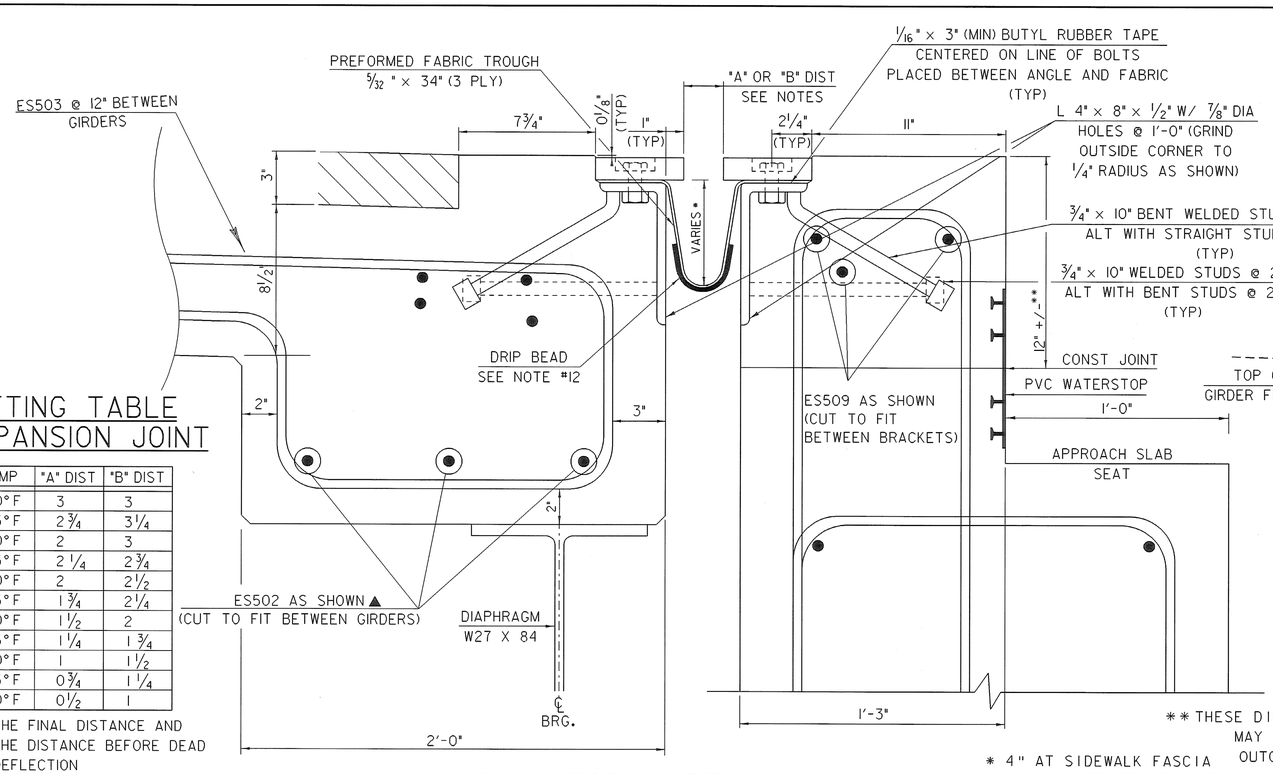

SETTING TABLE @ EXPANSION JOINT

TEMP	"A" DIST	"B" DIST
-30°F	3	3
-15°F	2 3/4	3 1/4
0°F	2	3
15°F	2 1/4	2 3/4
30°F	2	2 1/2
45°F	1 3/4	2 1/4
60°F	1 1/2	2
75°F	1 1/4	1 3/4
90°F	1	1 1/2
105°F	0 3/4	1 1/4
120°F	0 1/2	1

"A" IS THE FINAL DISTANCE AND "B" IS THE DISTANCE BEFORE DEAD LOAD DEFLECTION

** THESE DIMENSIONS ARE THEORETICAL AND MAY CHANGE DEPENDING UPON THE OUTCOME OF THE BEAM PROFILES

TYPICAL SECTION BETWEEN GIRDERS

* 4" AT SIDEWALK FASCIA TO 12" AT DOWNSPOUT @ 45° APPROX 11 5/8" @ ℄ TH 24 BECAUSE OF CROSS-SLOPE

TYPICAL SECTION AT GIRDERS

EXPANSION JOINT NOTES

1. DETAILS ON THIS SHEET ARE FOR ITEM 516.11, "BRIDGE EXPANSION JOINT, VERMONT".
2. PREFORMED FABRIC MATERIAL SHALL BE CONTINUOUS AND SHALL CONFORM TO SUBSECTION 707.07.
3. BUTYL RUBBER TAPE SHALL CONFORM TO SUBSECTION 707.12.
4. THE FINAL FINISH OF THE EXPANSION DEVICE SHALL BE COVERED DURING THE PLACING OF BRIDGE DECK.
5. ALL STEEL COMPONENTS SHALL BE GRADE 50 OR GRADE 36 GALVANIZED OR METALIZED AS PER SUBSECTION 506.15 (a) OR (b) UNLESS OTHERWISE SPECIFIED.
6. THE ITEM "BRIDGE EXPANSION JOINT, VERMONT" SHALL INCLUDE THE FABRICATION AND ERECTION OF THE COMPLETE JOINT ASSEMBLY INCLUDING ALL STEEL PLATES, BRACKETS, ANGLES, WELDED STUDS OR RODS, PREFORMED FABRIC DRAIN TROUGH MATERIAL AND PLASTIC DRAIN TUBES, BUTYL RUBBER TAPE, DRIP BEAD AND ANY OTHER MISCELLANEOUS MATERIAL NECESSARY TO INSTALL JOINT.
7. THE 4" X 8" X 1/2" ANGLES SHALL BE FURNISHED AS ONE CONTINUOUS PIECE. THE 1 1/4" X 5" BARS EACH SIDE OF THE JOINT SHALL BE PROVIDED IN TWO EQUAL LENGTHS.
8. COAT CONCRETE CONTACT SURFACES WITH EPOXY BONDING COMPOUND MEETING THE REQUIREMENTS OF SUBSECTION 719.02. PAYMENT SHALL BE INCLUDED IN THE UNIT PRICE BID FOR ITEM 516.11 "BRIDGE EXPANSION JOINT, VERMONT".
9. A 1" DIAMETER PLASTIC DRAIN TUBE SHALL BE INSTALLED AS SHOWN AT THE FACE OF CURB. THE UPPER END IS TO BE PLUGGED WITH STEEL WOOL AND THE LOWER END IS TO EXTEND BELOW THE BOTTOM OF THE ADJACENT GIRDER. THE DRAIN TUBES SHALL BE FASTENED TO THE GIRDERS USING A METHOD APPROVED BY THE ENGINEER.
10. FILL COUNTERBORED HOLES WITH HOT POURED JOINT SEALER AFTER BOLT INSTALLATION. PAYMENT FOR THE WORK SHALL BE INCIDENTAL TO ITEM 516.11.
11. PAYMENT FOR WATERSTOP SHALL BE INCIDENTAL TO "CONCRETE, HIGH PERFORMANCE CLASS A". SEE SHEET 47 FOR WATERSTOP DETAILS.
12. A 1/4" DRIP BEAD OF PREFORMED MATERIAL SHALL BE CEMENTED TO THE BOTTOM OF THE FABRIC TROUGH USING AN ADHESIVE APPROVED BY THE MANUFACTURER. THE DRIP BEAD SHALL BE APPLIED 1" FROM THE DOWNSPOUT END OF THE TROUGH.
13. FABRIC TROUGH SHALL BE THOROUGHLY CLEANED AND FLUSHED AFTER PAVING OPERATION.
14. THE EXPANSION JOINT SHALL BE SHOP ASSEMBLED AND SHIPPED AS ONE UNIT.
15. EXCEPT AS NOTED ALL BOLTS, STUDS AND RELATED HARDWARE SHALL CONFORM TO SUBSECTION 714.04 AND SHALL BE GALVANIZED IN ACCORDANCE WITH SUBSECTION 516.02

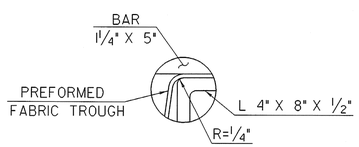

DETAIL "A"

NTS

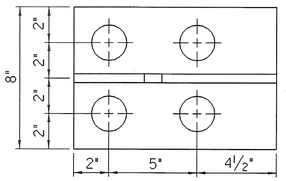

BRACKET "A" PLAN

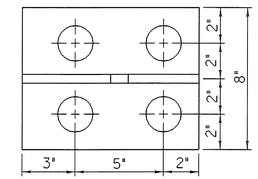

BRACKET "B" PLAN

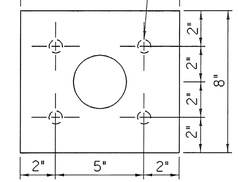

PLATE PLAN

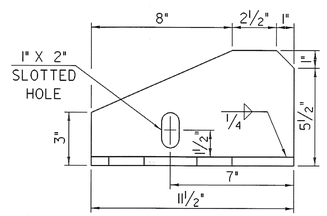

BRACKET "A" ELEVATION

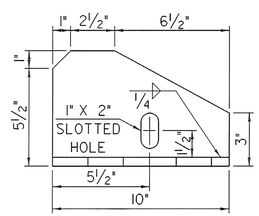

BRACKET "B" ELEVATION

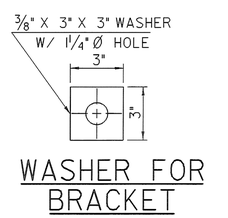

WASHER FOR BRACKET

SCALE 3" = 1'-0

SHEET NAME:	EXPANSION JOINT DETAILS SHEET 2		
PROJECT NAME:	POWNAL	HIGHWAY NO.:	TH 24
PROJECT NUMBER:	BRZ 1441(19) C/2	BRIDGE NO.:	41
		OVER:	HOOSIC RIVER
FILE NAME:	/87e045/str/se045exp.dgn	PLOT DATE:	29-FEB-2008
PROJECT MANAGER:	R. WHITCOMB	DRAWN BY:	T. FILLBACH
DESIGNED BY:	T.FILLBACH/C.CARLSON	IPARM NAME:	se045exp2.i
BRIDGE SHEET NUMBER:		SHEET 49	OF 108

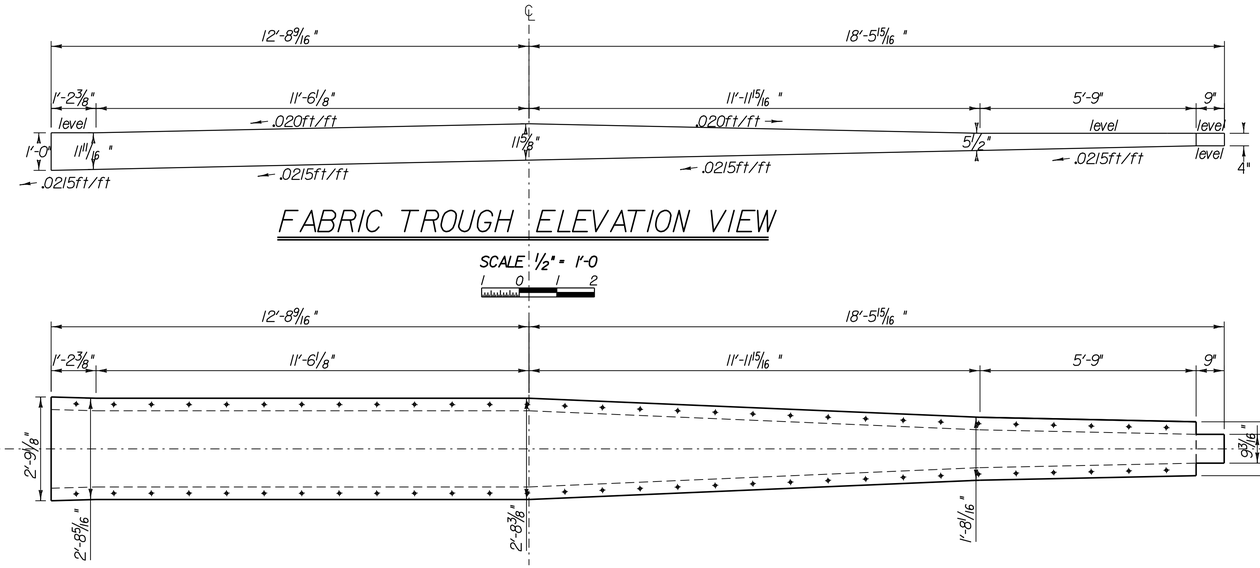

FABRIC TROUGH ELEVATION VIEW

SCALE 1/2" = 1'-0

FABRIC TROUGH PLAN VIEW

SCALE 1/2" = 1'-0

DOWNSPOUT NOTES

1. HOLLOW STRUCTURAL STEEL TUBING SHALL CONFORM TO SUBSECTION 714.11. AND GALVANIZED IN ACCORDANCE WITH SUBSECTION 506.15(a) AFTER FABRICATION.
2. ALL BOLTS AND RELATED HARDWARE SHALL CONFORM TO SUBSECTION 714.04 AND SHALL BE GALVANIZED IN ACCORDANCE WITH SUBSECTION 516.02.
3. AREAS WHERE THE GALVANIZING HAS BEEN REMOVED FROM THE DOWNSPOUT EITHER BY CUTTING, BURNING, WELDING, PLACING, OR ANY OTHER MEANS SHALL BE REPAIRED IN CONFORMANCE WITH SUBSECTION 513.06(f).
4. THE DOWNSPOUT, AND ALL ANCHOR BOLTS WITH RELATED HARDWARE SHALL BE PAID FOR UNDER ITEM 506.60, "STRUCTURAL STEEL".

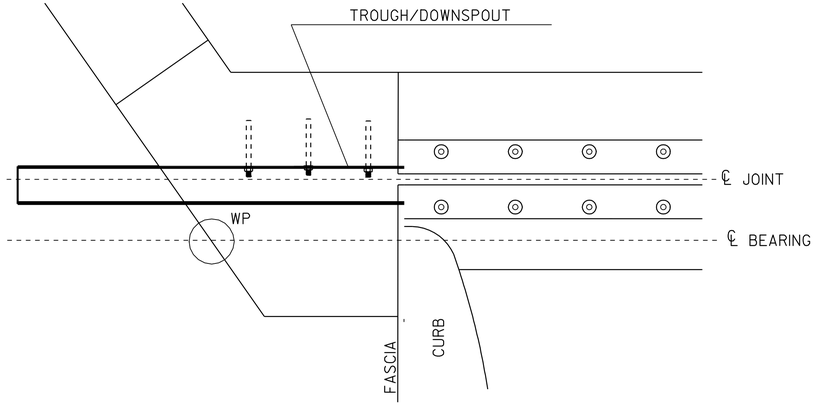

DOWNSPOUT PLAN

SCALE 1" = 1'-0

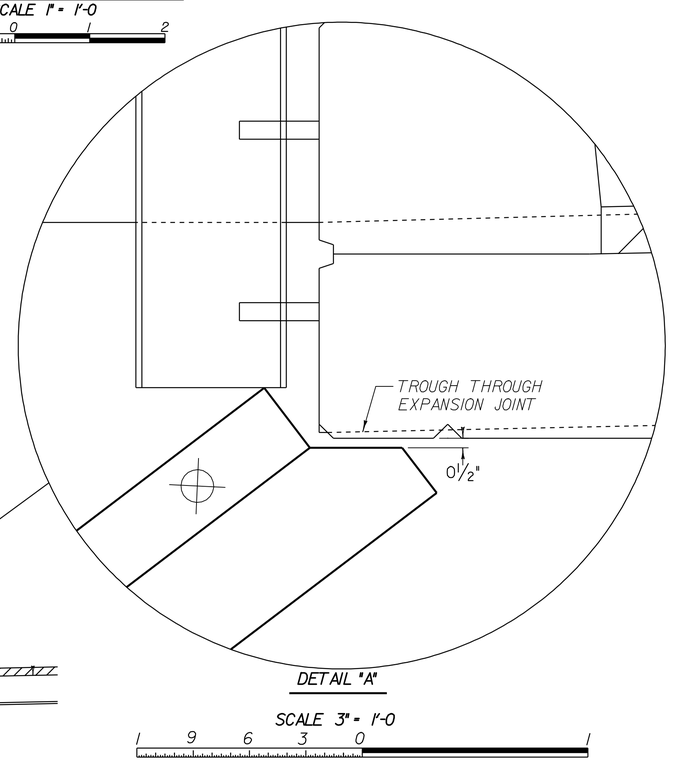

DETAIL "A"

SCALE 3" = 1'-0

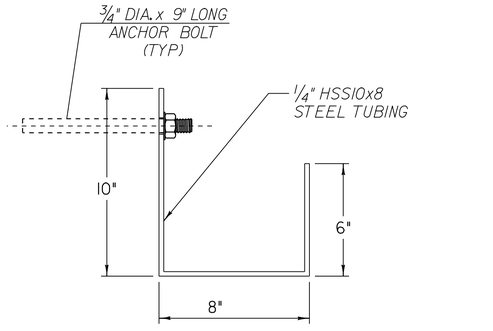

DOWNSPOUT SECTION

SCALE 3" = 1'-0

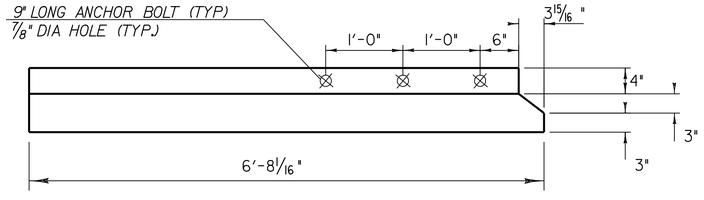

FRONT VIEW

SCALE 1" = 1'-0

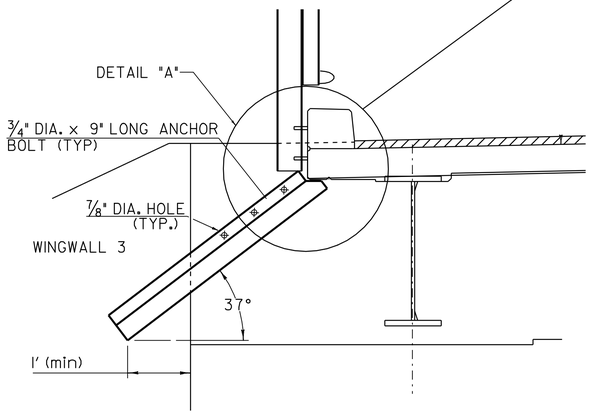

DOWN SPOUT ELEVATION VIEW

SCALE 1/2" = 1'-0

DOWN SPOUT DETAIL SHEET

PROJECT NAME:	POWNAL
PROJECT NUMBER:	BRZ 1449(19) C/2
FILE NAME: 87e045\str\se045exp.dgn	PLOT DATE: 23-AUG-2010
PROJECT LEADER: R. WHITCOMB	DRAWN BY: C. MOONEY
DESIGNED BY: C. MOONEY/R. WHITCOMB	CHECKED BY: R. WHITCOMB
	SHEET 50 OF 108

REV.	BY	DATE	DESCRIPTION
1	LBB	4/21/08	REVISED BRIDGE SEAT ELEVATIONS
2	LBB	4/21/08	REVISED DIMENSION OF FOOTING ON WW2
3	CWC	5/22/08	REVISED WW 1 & WW 2 ELEVATIONS
4	CWC	7/01/08	EXISTING BOTTOM OF FOOTING ELEVATION REVISED

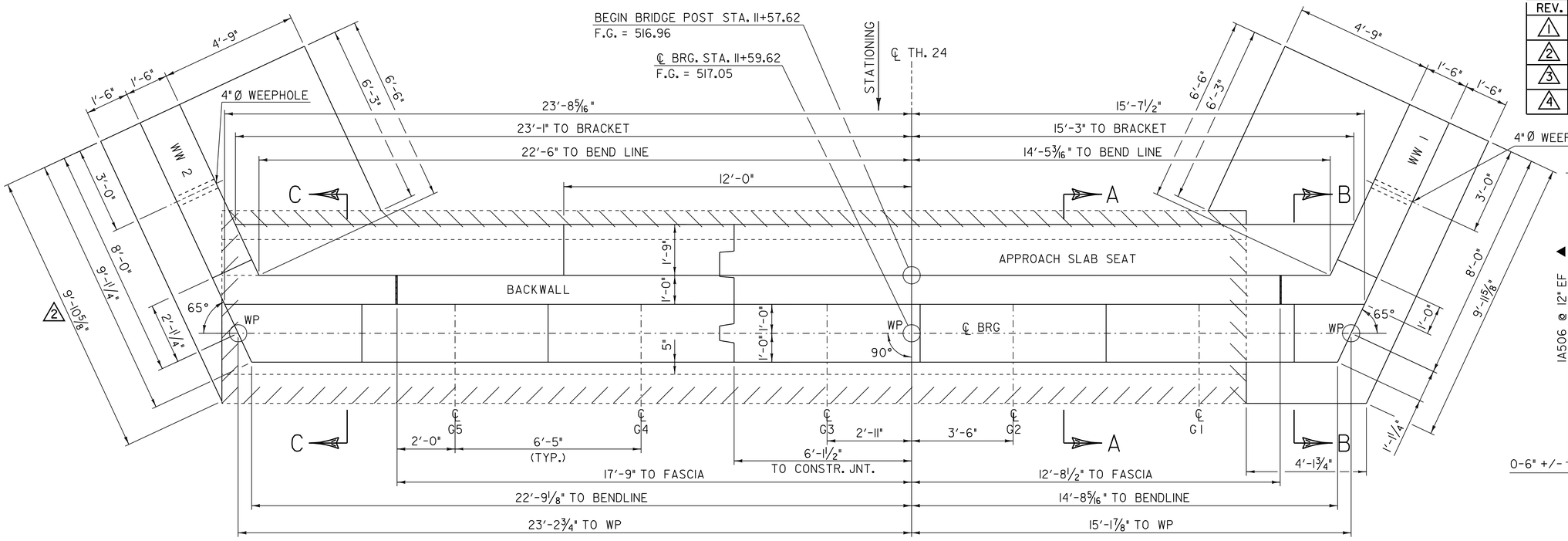

ABUTMENT NO. 1 PLAN

SCALE 1/2" = 1'-0
COPING NOT SHOWN

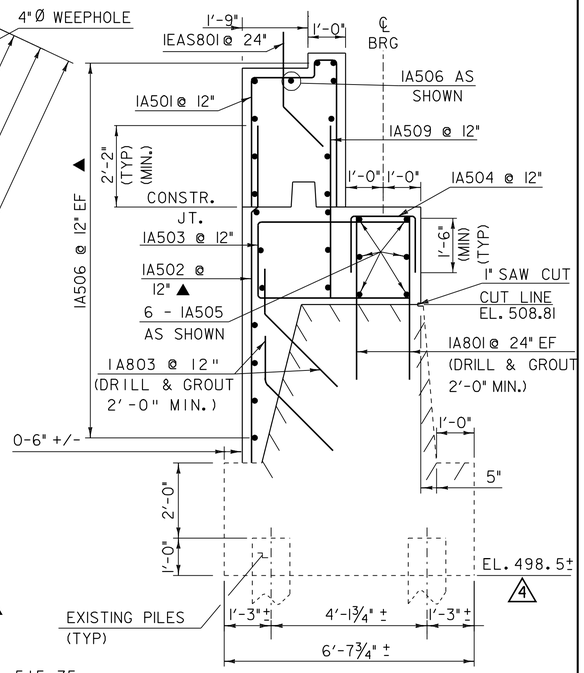

ABUTMENT NO. 1 (SECTION A-A)

(NTS)

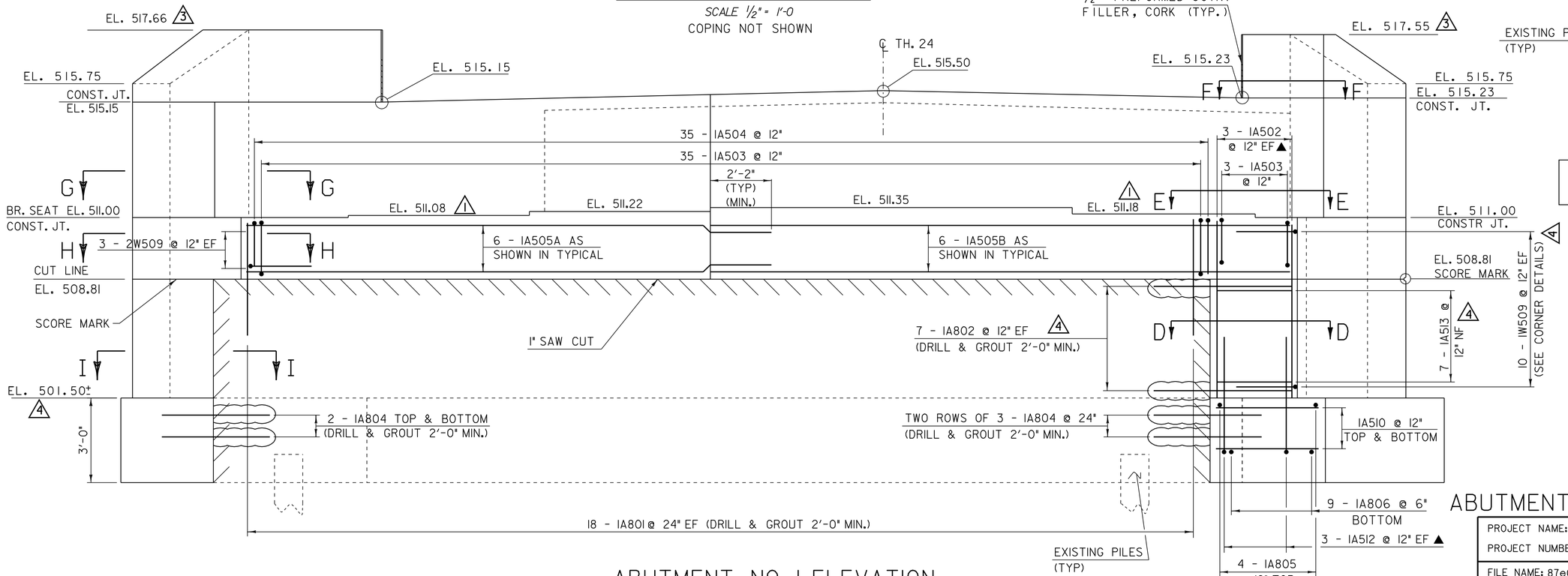

ABUTMENT NO. 1 ELEVATION

(NTS)

SEE SHEET 55 FOR ABUTMENT NO. 1 SECTION B-B AND SECTION C-C

EXISTING ABUTMENT

NOTES:

1. NF = NEAR FACE
2. FF = FAR FACE
3. EF = EACH FACE
4. ▲ = CUT TO FIT IN FIELD
5. 3" CLR. UNLESS OTHERWISE SPECIFIED ON THE PLANS
6. SEE SHEET 57 FOR FOOTING REINFORCING
7. SEE SHT 53 FOR BACKWALL DETAIL AND CORNER DETAIL (SECTIONS EE & FF)
8. SEE SHEET 55 FOR SECTION DD
9. SEE SHEET 56A FOR SECTIONS G-G, H-H, AND I-I.

ABUTMENT NO. 1 PLAN & ELEVATION

PROJECT NAME: POWNAL
PROJECT NUMBER: BRZ 1441(19) C/2

FILE NAME: 87e045/str/se045sub.dgn
PROJECT LEADER: R. WHITCOMB
DESIGNED BY: C. CARLSON
se045subl.1

PLOT DATE: 23-AUG-2010
DRAWN BY: D. PETERSON
CHECKED BY: W. LAMMER
SHEET 51 OF 108

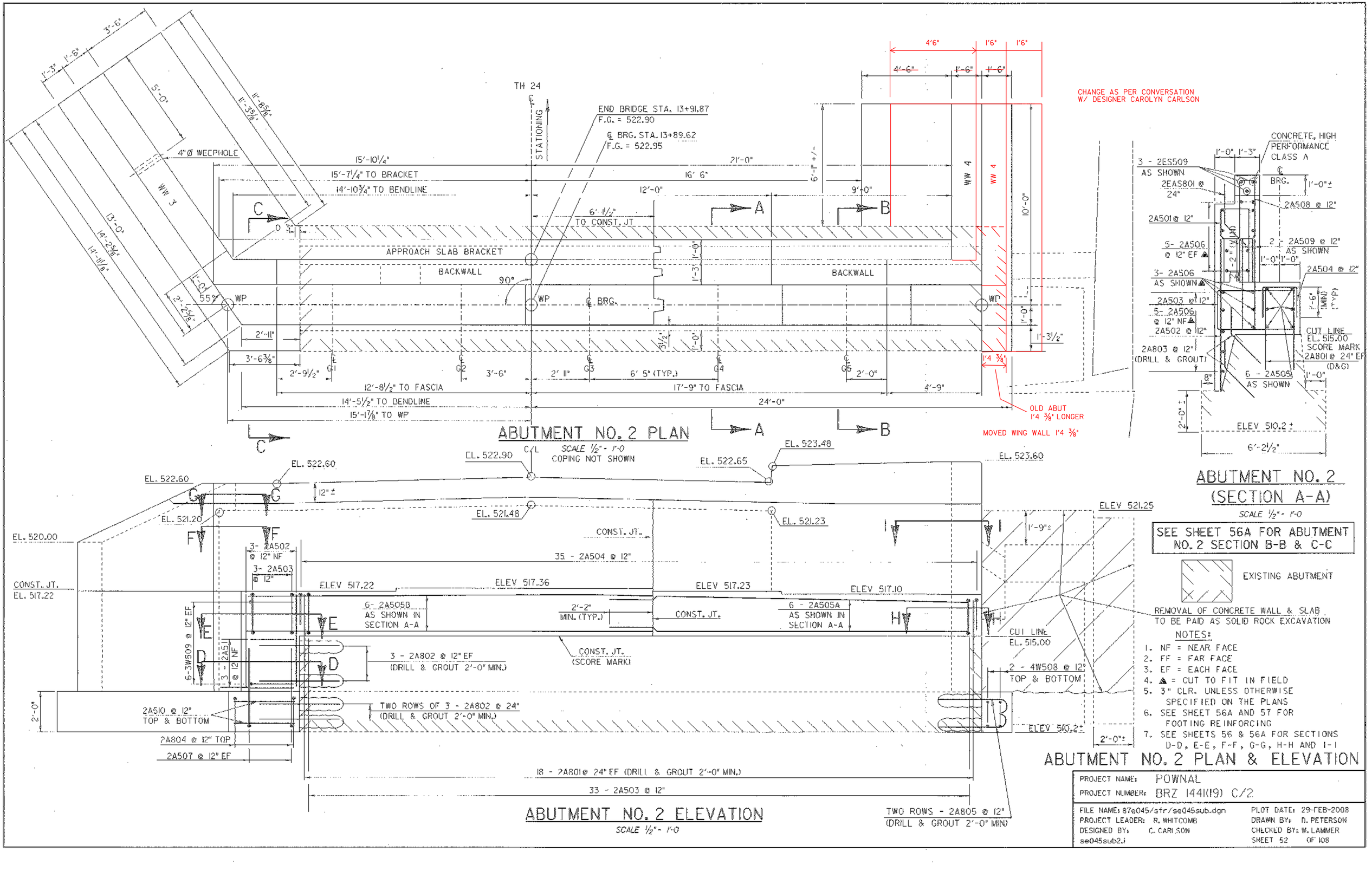

NOTES:

1. NF = NEAR FACE
2. FF = FAR FACE
3. EF = EACH FACE
4. ▲ = CUT TO FIT IN FIELD
5. 3" CLR. UNLESS OTHERWISE SPECIFIED ON THE PLANS
6. SEE SHEET 56A AND 57 FOR FOOTING REINFORCING
7. SEE SHEETS 56 & 56A FOR SECTIONS D-D, E-E, F-F, G-G, H-H AND I-I

ABUTMENT NO. 2 PLAN & ELEVATION

PROJECT NAME: POWNAL	
PROJECT NUMBER: BRZ 1441(19) C/2	
FILE NAME: 87e045/str/se045sub.dgn	PLOT DATE: 29-FEB-2008
PROJECT LEADER: R. WHITCOMB	DRAWN BY: D. PETERSON
DESIGNED BY: C. CARLSON	CHECKED BY: W. LAMMER
se045sub2.i	SHEET 52 OF 108

REV.	BY	DATE	DESCRIPTION
3	CWC	5/22/08	REVISED WW 1 & WW 2 ELEVATIONS
4	CWC	7/01/08	EXISTING BOTTOM OF FOOTING ELEVATION REVISED

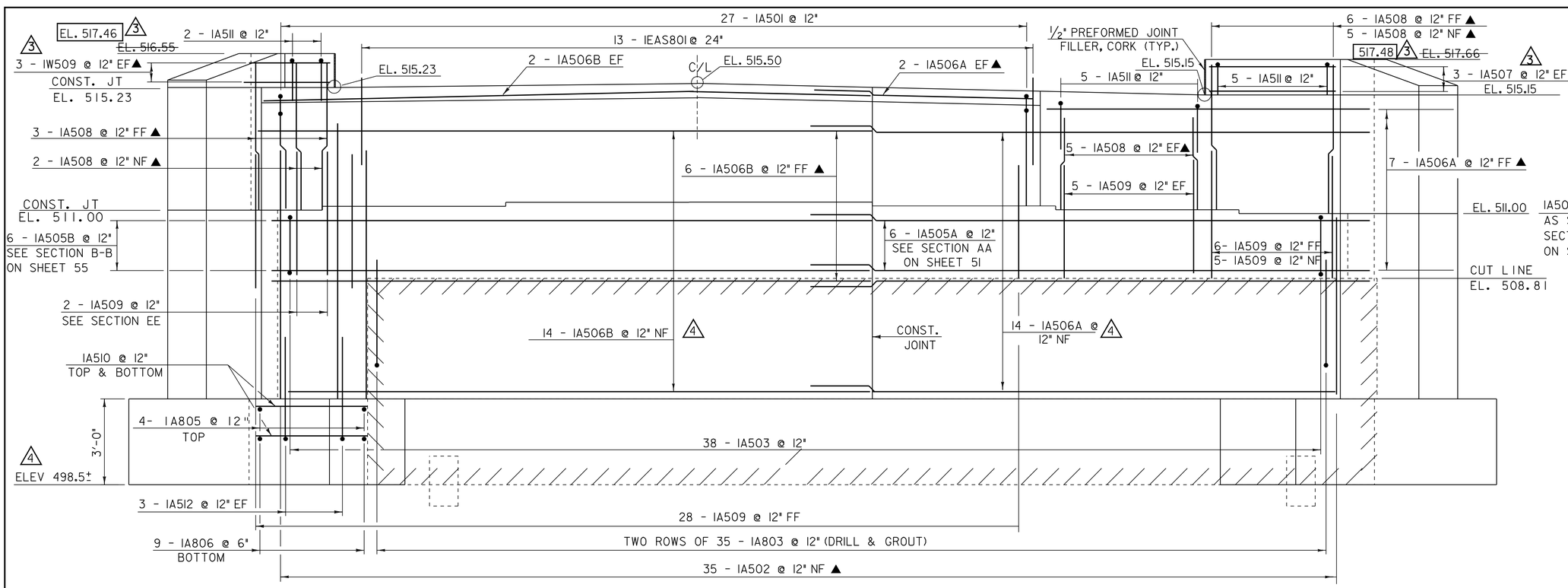

ABUTMENT NO. 1 BACKWALL ELEVATION (LOOKING AT BACK OF ABUTMENT)

(NTS)

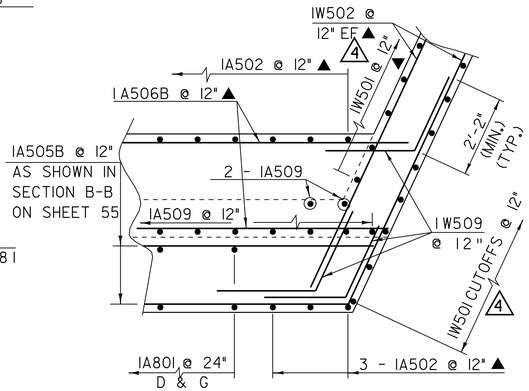

WINGWALL NO. 1 CORNER REINFORCING SECTION E-E

SCALE ½" = 1'-0

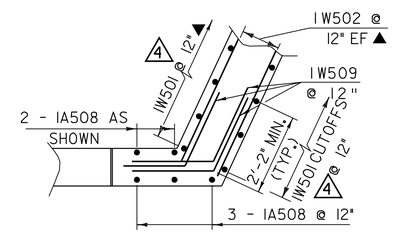

WINGWALL NO. 1 CORNER REINFORCING SECTION F-F

SCALE ½" = 1'-0

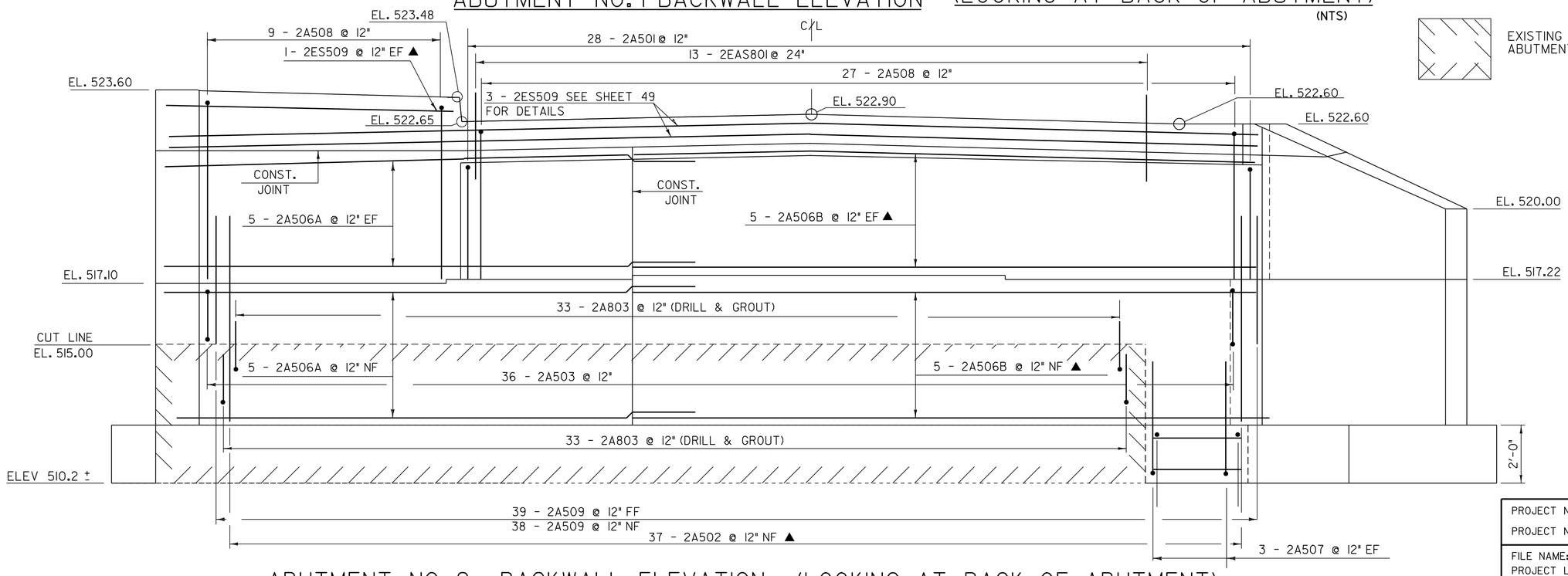

EXISTING ABUTMENT

ABUTMENT NO. 2 BACKWALL ELEVATION (LOOKING AT BACK OF ABUTMENT)

SCALE ½" = 1'-0

NOTES:

1. NF = NEAR FACE
2. FF = FAR FACE
3. EF = EACH FACE
4. ▲ = CUT TO FIT IN FIELD
5. 3" CLR. UNLESS OTHERWISE SPECIFIED ON THE PLANS
6. SEE SHEET 57 FOR FOOTING REINFORCING
7. SEE SHEET 56 & 56A FOR CORNER DETAILS.
8. SEE SHEET 55 FOR WW NO. 1 CORNER REINFORCING SECTION D-D

ABUTMENT NO. 1 & NO. 2 BACKWALL DETAILS

PROJECT NAME: POWNAL
PROJECT NUMBER: BRZ 1441(19) C/2

FILE NAME: 87e045/str/se045sub.dgn
PROJECT LEADER: R. WHITCOMB
DESIGNED BY: C. CARLSON
se045sub3.1

PLOT DATE: 23-AUG-2010
DRAWN BY: D. PETERSON
CHECKED BY: W. LAMMER
SHEET 53 OF 108

REV.	BY	DATE	DESCRIPTION
1	LBB	4/21/08	REVISED BRIDGE SEAT ELEVATIONS

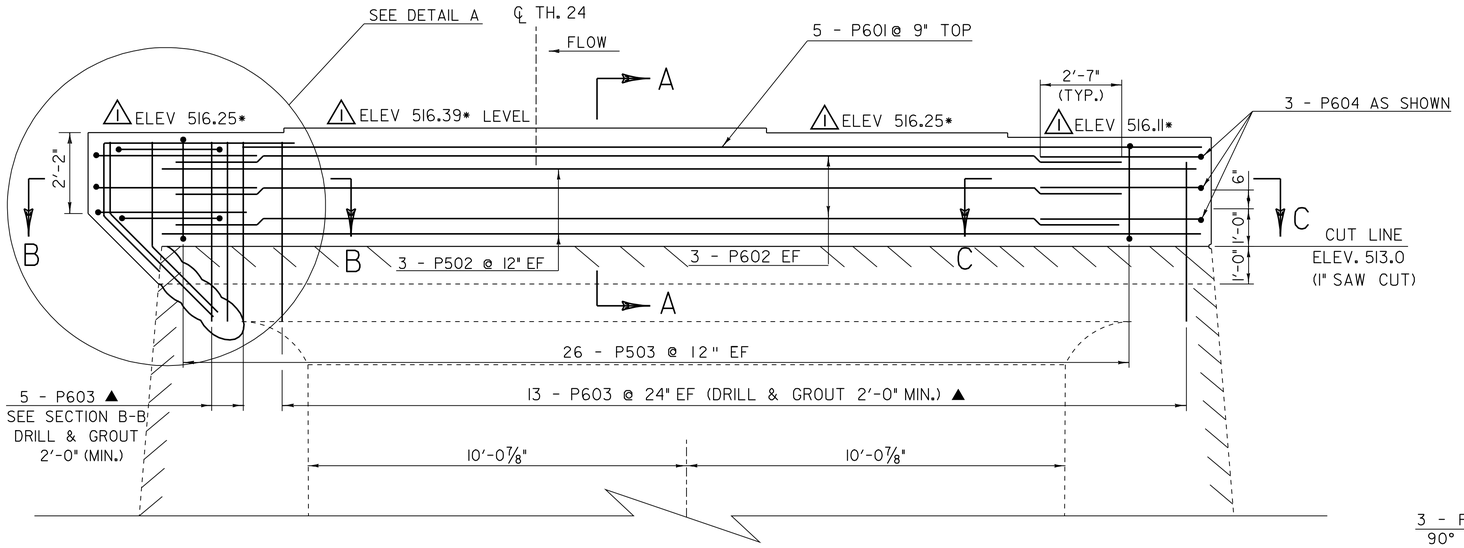

PIER ELEVATION

SCALE 1/2" = 1'-0

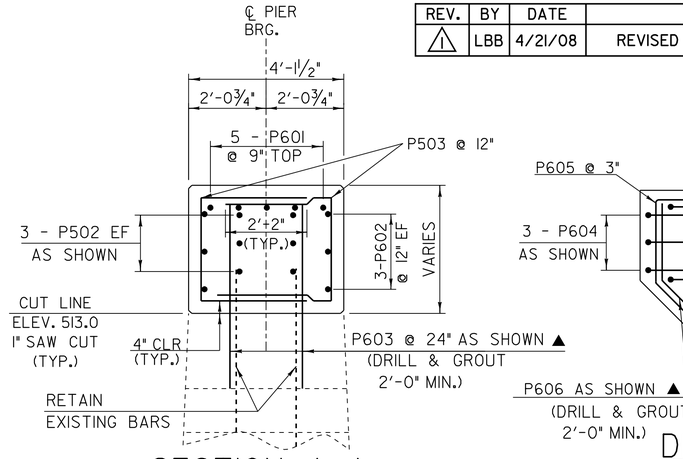

SECTION A-A

SCALE 1/2" = 1'-0

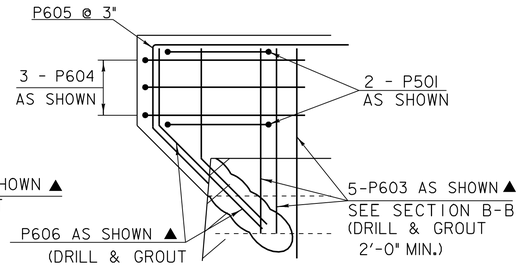

DETAIL A

SCALE 1/2" = 1'-0

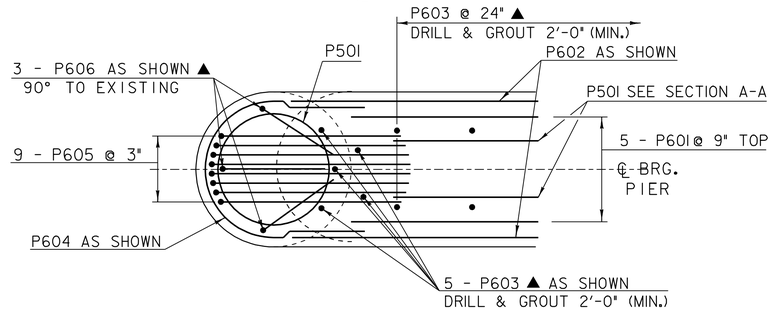

SECTION B-B

SCALE 1/2" = 1'-0

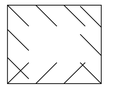

EXISTING PIER

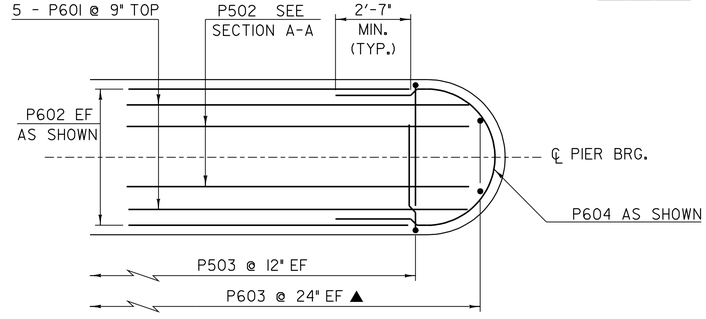

SECTION C-C

SCALE 1/2" = 1'-0

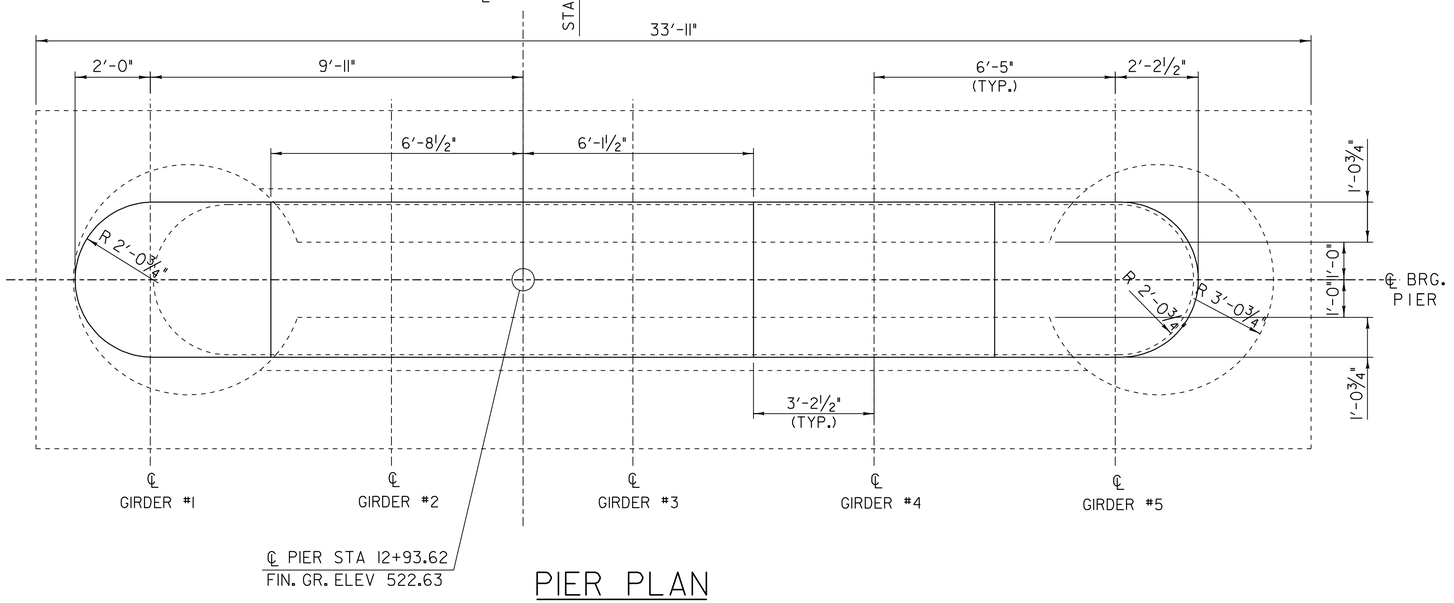

PIER PLAN

SCALE 1/2" = 1'-0

NOTES:

1. NF = NEAR FACE
2. FF = FAR FACE
3. EF = EACH FACE
4. ▲ = CUT TO FIT IN FIELD
5. 4" CLR. FOR PIER UNLESS SPECIFIED ON THE PLANS.
6. * SEAT ELEVATIONS ARE BASED ON BEARING HEIGHT SHOWN ON SHEET 44. ELEVATIONS MUST BE ADJUSTED FOR ACTUAL DEPTH OF BEARING USED.
7. D & G DRILL & GROUT 2'-0" MIN.

PIER REINFORCING DETAILS

PROJECT NAME: POWNAL
PROJECT NUMBER: BRZ 1441(19) C/2

FILE NAME: 87e045/str/se045sub.dgn
PROJECT LEADER: R. WHITCOMB
DESIGNED BY: C. CARLSON
se045sub4.i

PLOT DATE: 23-AUG-2010
DRAWN BY: D. PETERSON
CHECKED BY: W. LAMMER
SHEET 54 OF 108

REV.	BY	DATE	DESCRIPTION
3	CWC	5/22/08	REVISED WW 1& WW 2 ELEVATIONS
4	CWC	7/01/08	EXISTING BOTTOM OF FOOTING ELEVATION REVISED

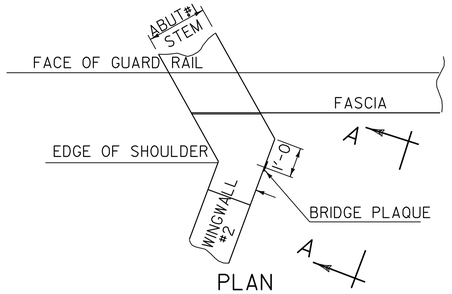

PLAN

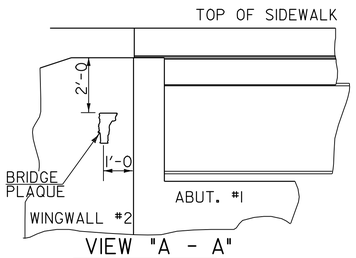

VIEW "A - A"

LOCATE BRIDGE PLAQUE

THE BRIDGE PLAQUE WILL BE SUPPLIED BY THE AGENCY OF TRANSPORTATION AND SHALL BE INSTALLED BY THE CONTRACTOR AT ABUTMENT #1 ON THE RIGHT SIDE AS SHOWN OR AS DIRECTED BY THE ENGINEER. THIS WORK IS INCIDENTAL TO THE ITEM "CONCRETE, HIGH PERFORMANCE CLASS B".

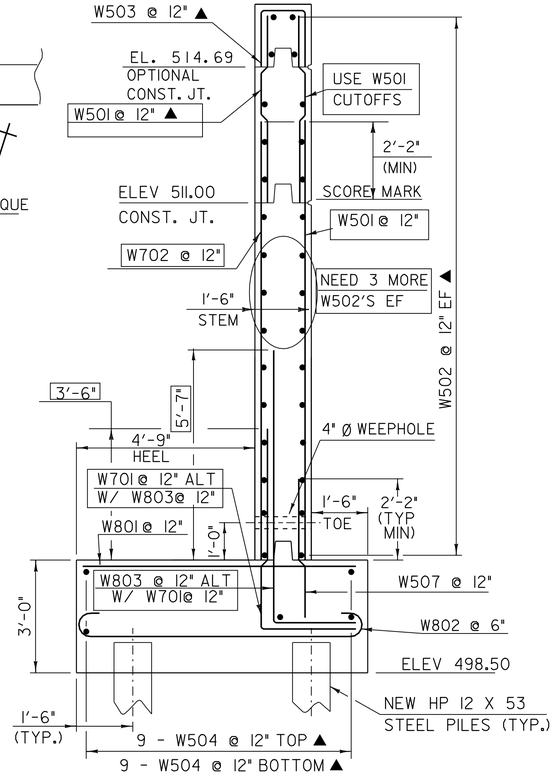

WINGWALL NO. 1 AND 2 TYPICAL

SCALE ½" = 1'-0 (4)

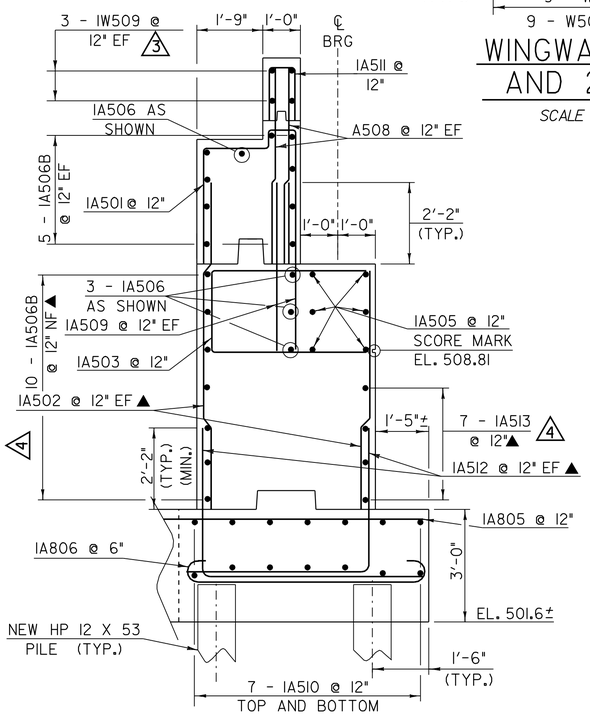

ABUTMENT NO. 1 (SECTION B-B)

(NTS)

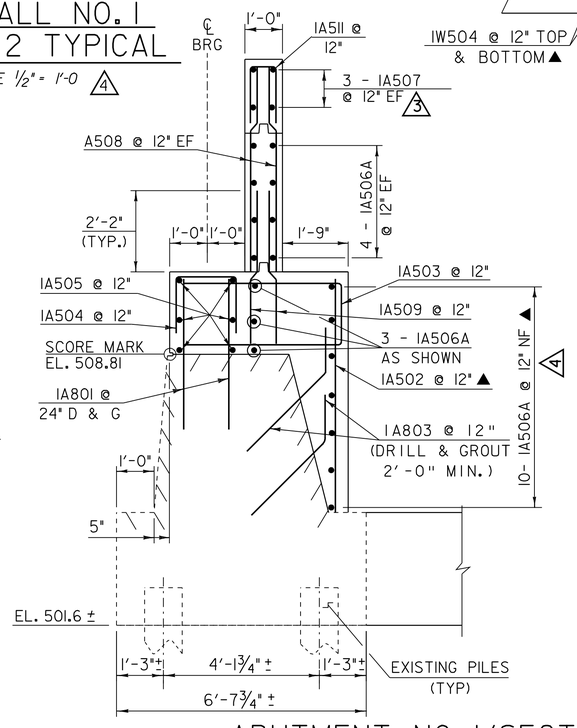

ABUTMENT NO. 1 (SECTION C-C)

(NTS)

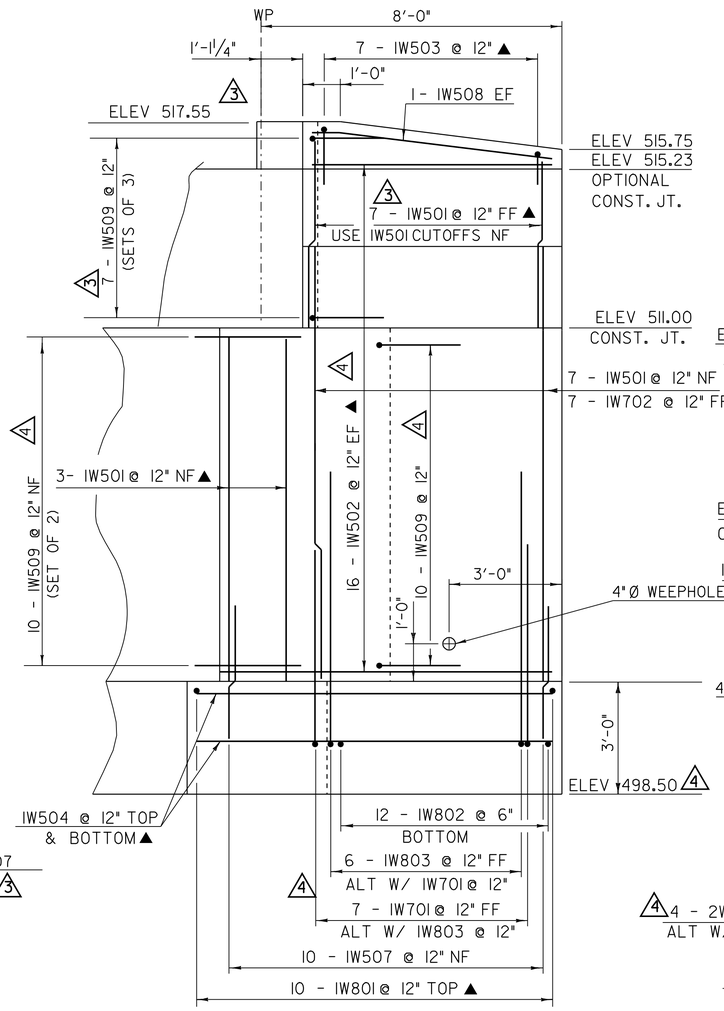

WINGWALL NO. 1 ELEVATION

SCALE ½" = 1'-0

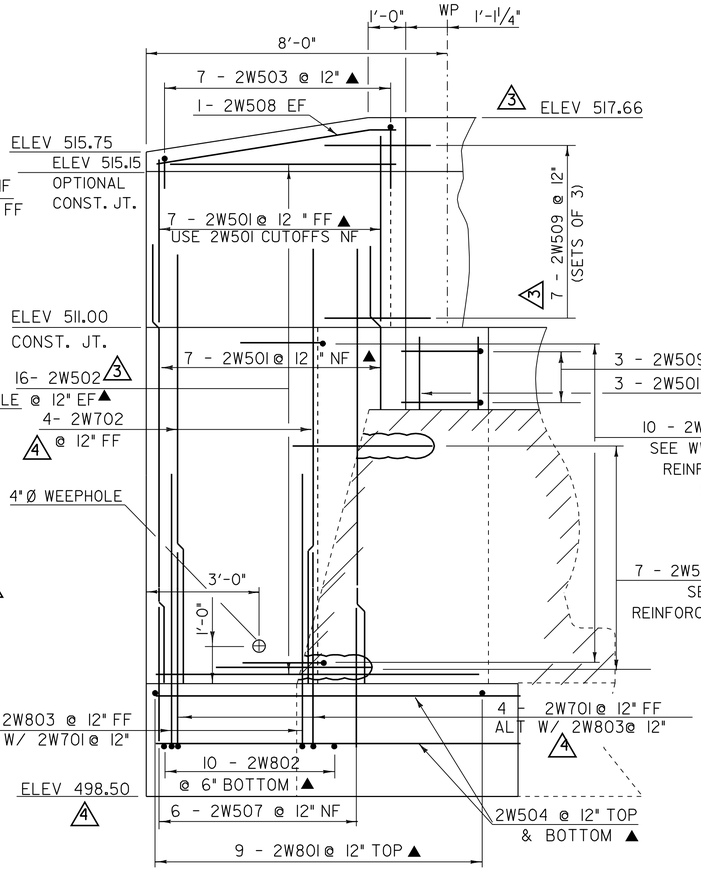

WINGWALL NO. 2 ELEVATION

SCALE ½" = 1'-0

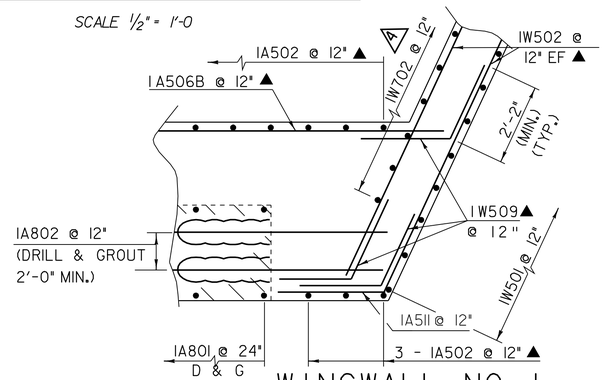

WINGWALL NO. 1 CORNER REINFORCING SECTION D-D

SCALE ½" = 1'-0

NOTES:

1. NF = NEAR FACE
2. FF = FAR FACE
3. EF = EACH FACE
4. ▲ = CUT TO FIT IN FIELD
5. 3" CLR. UNLESS OTHERWISE SPECIFIED ON THE PLANS.
6. D & G - DRILL & GROUT 2'-0" MIN.

WINGWALL NO. 1 & NO. 2 DETAILS

PROJECT NAME: POWNAL
PROJECT NUMBER: BRZ 1441(19) C/2

FILE NAME: 87e045/str/se045sub.dgn
PROJECT LEADER: R. WHITCOMB
DESIGNED BY: C. CARLSON
se045sub5.1

PLOT DATE: 23-AUG-2010
DRAWN BY: D. PETERSON
CHECKED BY: W. LAMMER
SHEET 55 OF 108

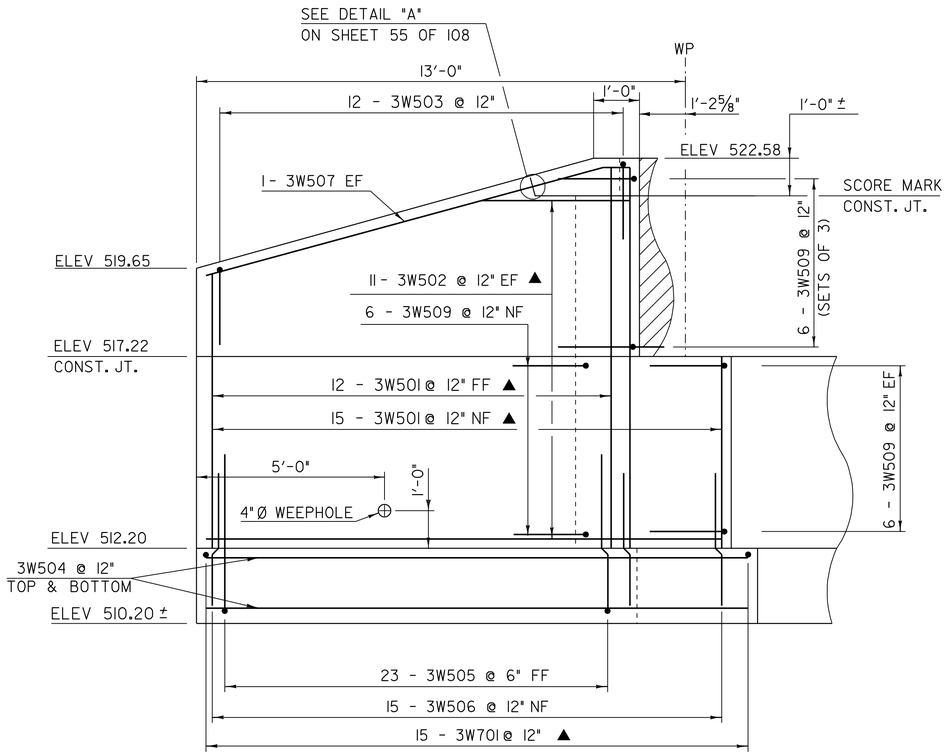

WINGWALL NO. 3 ELEVATION

SCALE ½" = 1'-0

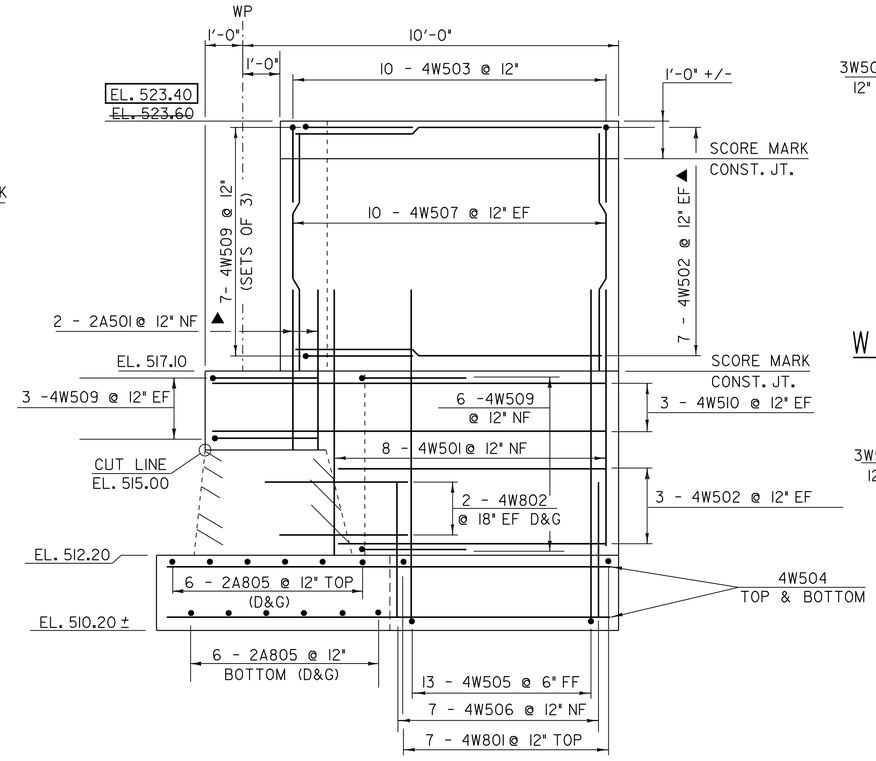

WINGWALL NO. 4 ELEVATION

SCALE ½" = 1'-0

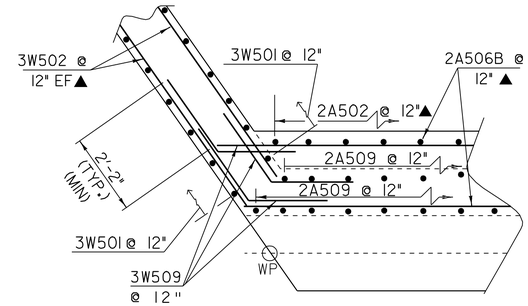

WINGWALL NO. 3 CORNER REINFORCING SECTION F-F

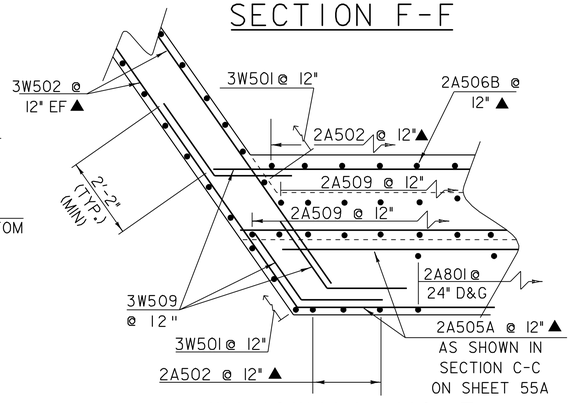

WINGWALL NO. 3 CORNER REINFORCING SECTION E-E

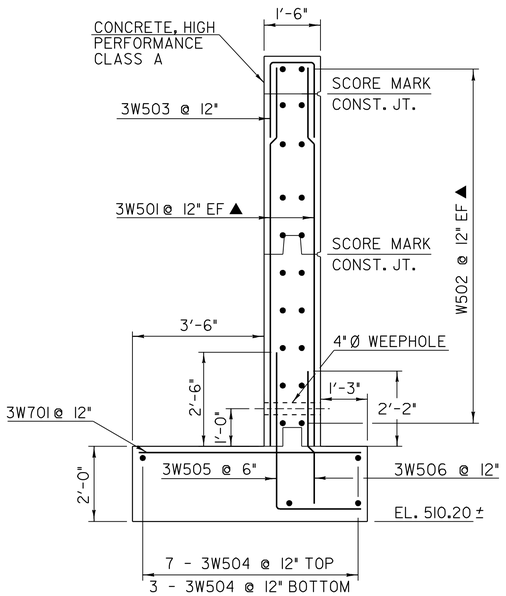

WINGWALL NO. 3 TYPICAL

SCALE ½" = 1'-0

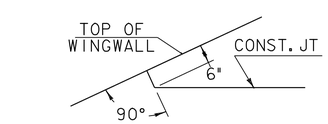

HORIZONTAL CONSTRUCTION

SCALE ¼" = 1'-0

NOTES:

1. NF = NEAR FACE
2. FF = FAR FACE
3. EF = EACH FACE
4. ▲ = CUT TO FIT IN FIELD
5. 3" CLR. UNLESS OTHERWISE SPECIFIED ON THE PLANS.
6. D & G - DRILL & GROUT (2'-0" MIN. INTO EXISTING ABUTMENT)
7. SEE SHEET 56A FOR WW NO. 4 CORNER REINFORCING

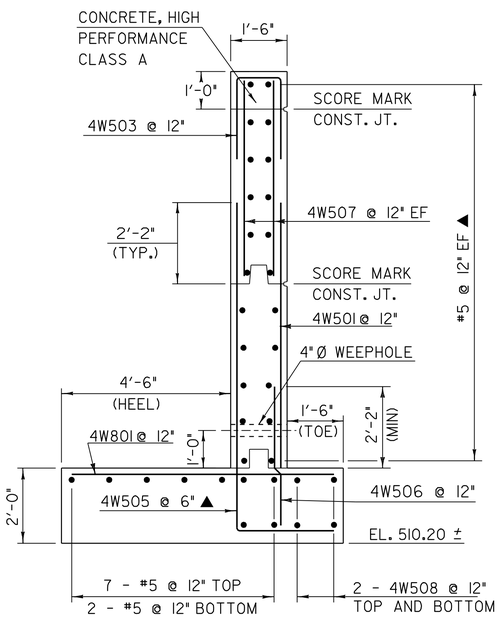

WINGWALL NO. 4 TYPICAL

SCALE ½" = 1'-0

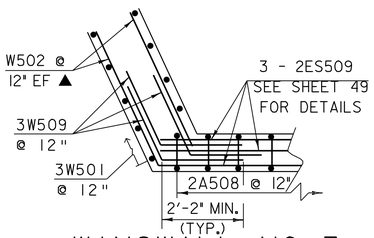

WINGWALL NO. 3 CORNER REINFORCING SECTION G-G

SCALE ½" = 1'-0

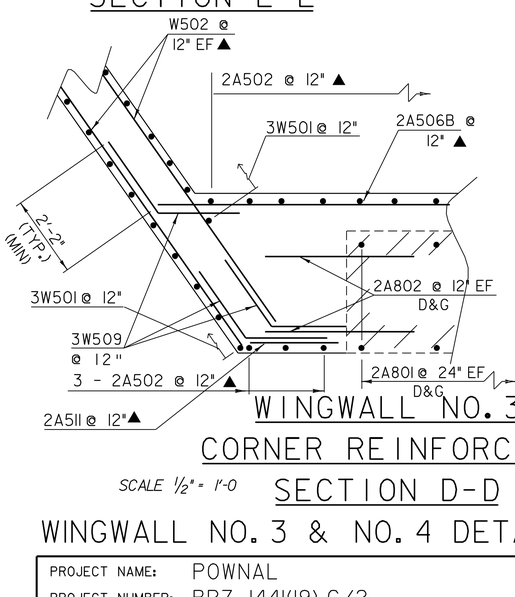

WINGWALL NO. 3 CORNER REINFORCING SECTION D-D

SCALE ½" = 1'-0

WINGWALL NO. 3 & NO. 4 DETAILS

PROJECT NAME:	POWNAL
PROJECT NUMBER:	BRZ 1441(19) C/2

FILE NAME: 87e045/str/se045sub.dgn		PLOT DATE: 23-AUG-2010	
PROJECT LEADER: R. WHITCOMB		DRAWN BY: D. PETERSON	
DESIGNED BY: C. CARLSON		CHECKED BY: W. LAMMER	
se045sub6.i		SHEET 56 OF 108	

REV.	BY	DATE	DESCRIPTION
4	CWC	7/01/08	EXISTING BOTTOM OF FOOTING ELEVATION REVISED

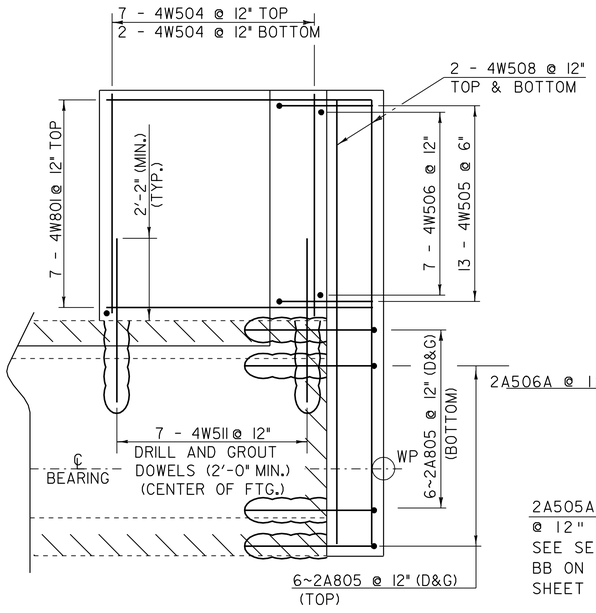

WW4 FOOTING REINFORCING

SCALE ½" = 1'-0

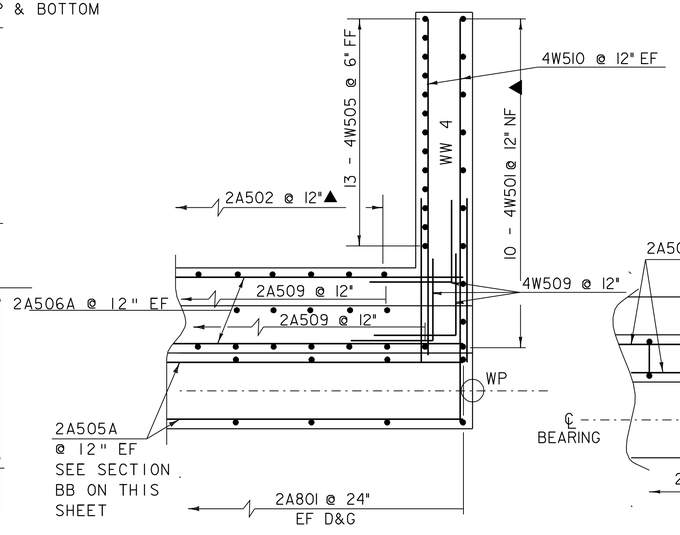

WW4 CORNER REINFORCING SECTION H-H

SCALE ½" = 1'-0

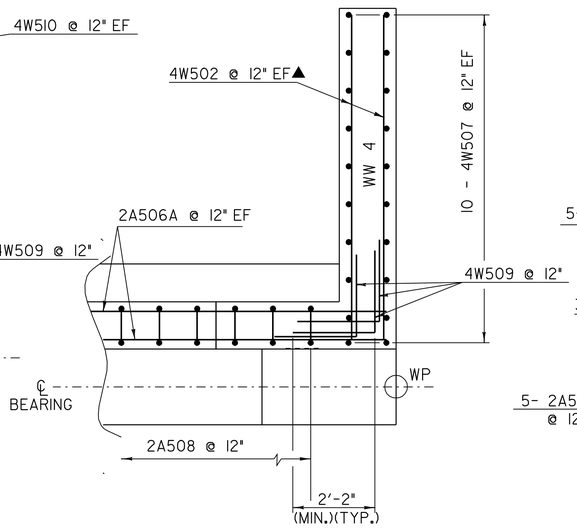

WW4 CORNER REINFORCING SECTION I-I

SCALE ½" = 1'-0

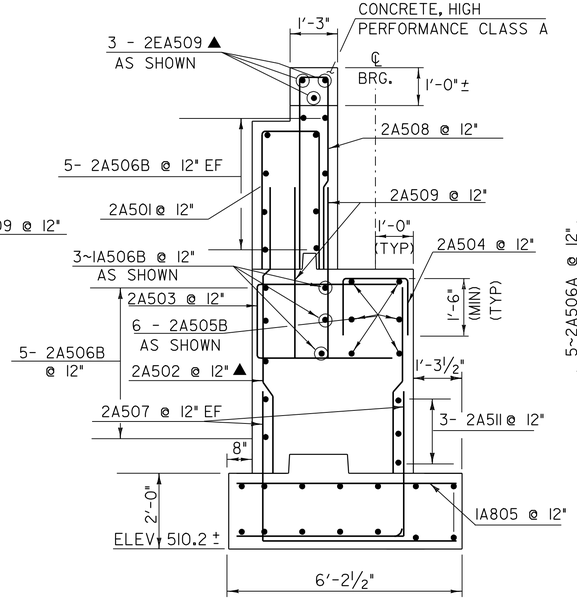

ABUTMENT NO. 2 (SECTION C-C)

SCALE ½" = 1'-0

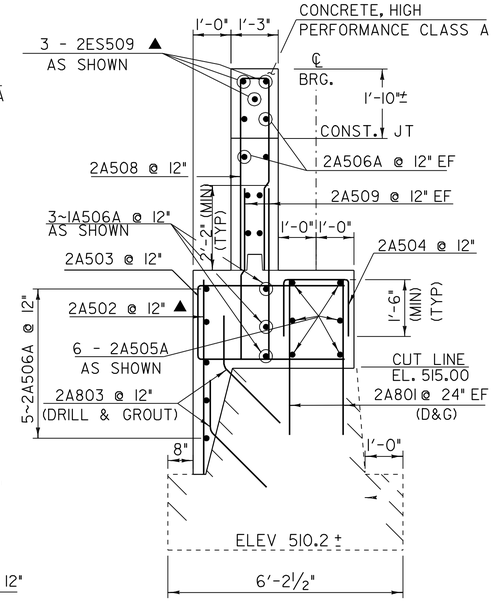

ABUTMENT NO. 2 (SECTION B-B)

SCALE ½" = 1'-0

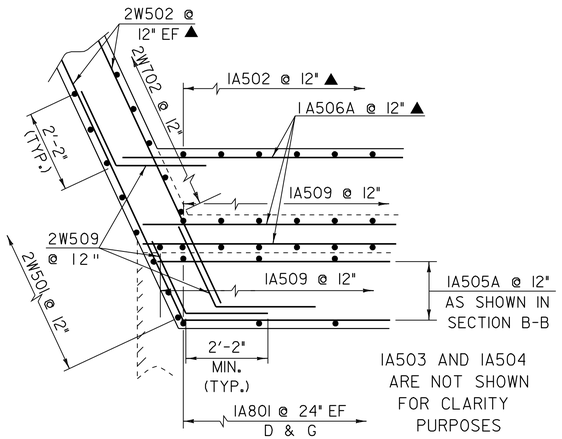

WINGWALL NO. 2 CORNER REINFORCING SECTION H-H ⟨4⟩

SCALE ½" = 1'-0

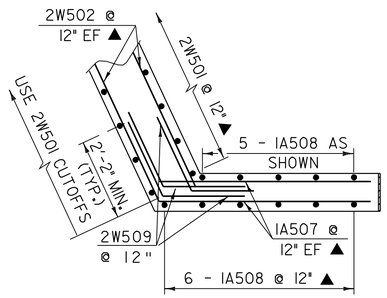

WINGWALL NO. 2 CORNER REINFORCING SECTION G-G ⟨4⟩

SCALE ½" = 1'-0

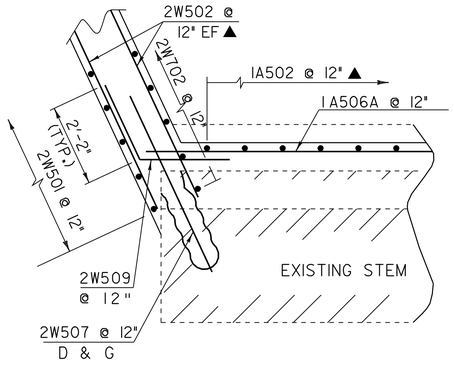

WINGWALL NO. 2 CORNER REINFORCING SECTION I-I ⟨4⟩

SCALE ½" = 1'-0

NOTES:

1. NF = NEAR FACE
2. FF = FAR FACE
3. EF = EACH FACE
4. ▲ = CUT TO FIT IN FIELD
5. 3" CLR. UNLESS OTHERWISE SPECIFIED ON THE PLANS.
6. D & G - DRILL & GROUT 2'-0" MIN.

EXISTING ABUTMENT

WINGWALL NO. 2 & NO. 4 CORNER DETAILS

PROJECT NAME:	POWNAL
PROJECT NUMBER:	BRZ 1441(19) C/2

FILE NAME: /87e045/str/se045sub.dgn	PLOT DATE: 23-AUG-2010
PROJECT LEADER: R. WHITCOMB	DRAWN BY: D. PETERSON
DESIGNED BY: C. CARLSON	CHECKED BY: C. CARLSON
se045sub7.1	SHEET 56A OF 108

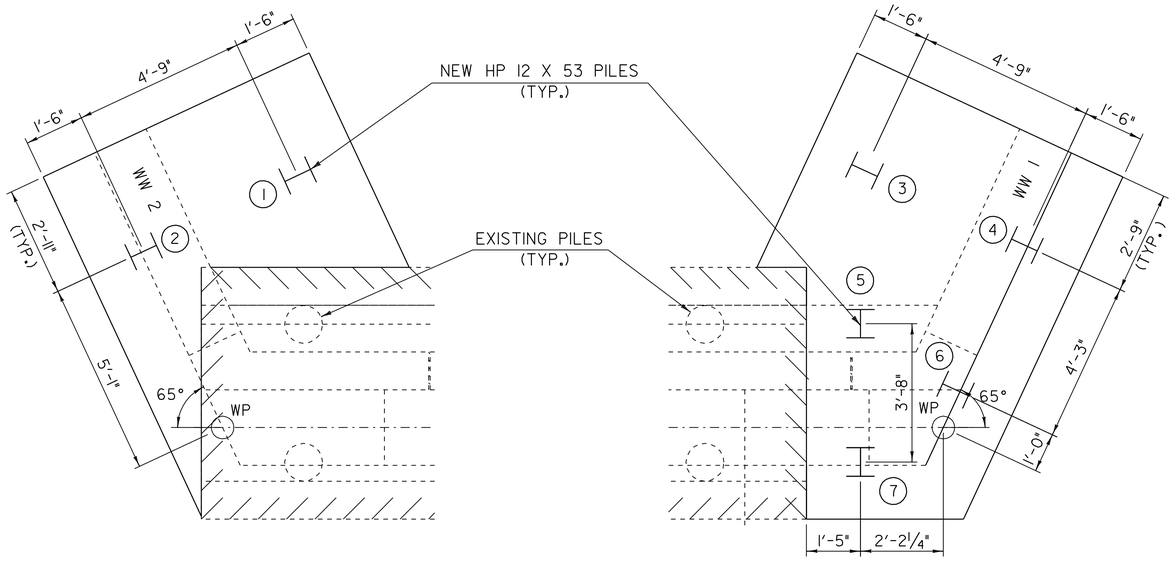

WINGWALL NO. 2 PILE LAYOUT

SCALE 1/2" = 1'-0

WINGWALL NO. 1 PILE LAYOUT

SCALE 1/2" = 1'-0

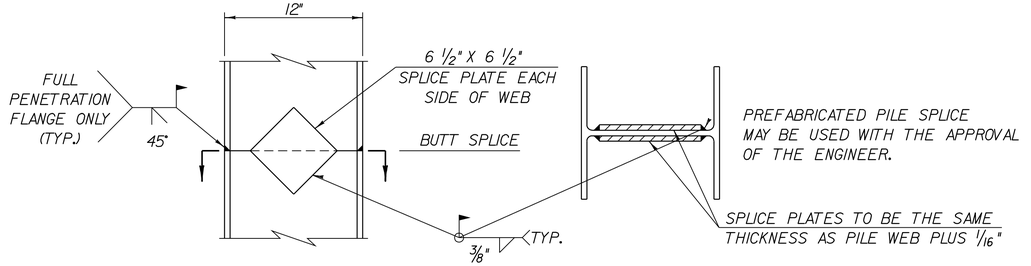

PILE SPLICE DETAILS

NOT TO SCALE

PILE NOTES

1. I - INDICATES LOCATION OF A VERTICAL PILE

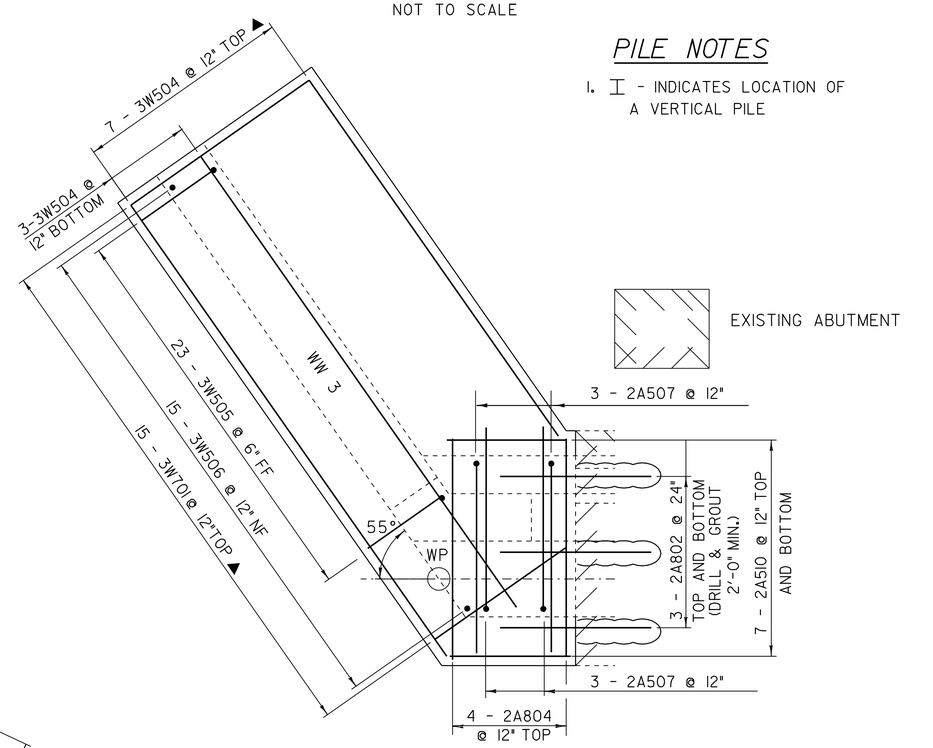

WINGWALL NO. 3 FOOTING REINFORCING PLAN

SCALE 1/2" = 1'-0

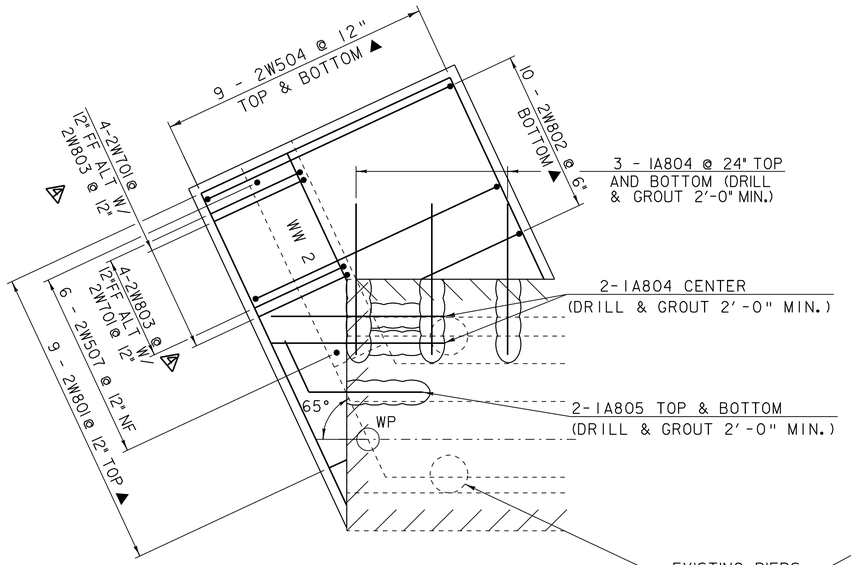

WINGWALL NO. 2 FOOTING REINFORCING PLAN

SCALE 1/2" = 1'-0

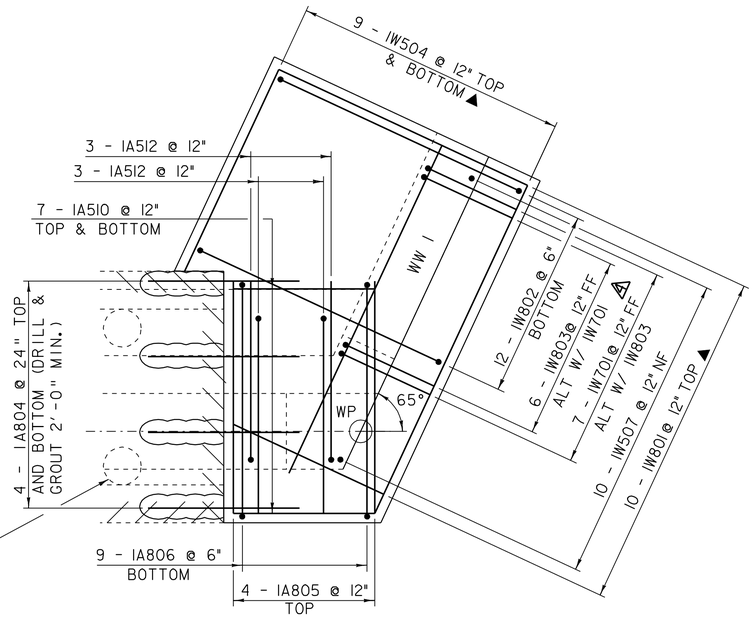

WINGWALL NO. 1 FOOTING REINFORCING PLAN

SCALE 1/2" = 1'-0

REV.	BY	DATE	DESCRIPTION
4	CWC	7/01/08	EXISTING BOTTOM OF FOOTING ELEVATION REVISED

NOTES:

1. NF = NEAR FACE
2. FF = FAR FACE
3. EF = EACH FACE
4. ▲ = CUT TO FIT IN FIELD
5. 3" CLR. UNLESS OTHERWISE SPECIFIED ON THE PLANS.

PILE LAYOUT AND FOOTING REINFORCING PLAN

PROJECT NAME: POWNAL
PROJECT NUMBER: BRZ 1441(19) C/2

FILE NAME: /87e045/str/se045sub.dgn
PROJECT LEADER: R. WHITCOMB
DESIGNED BY: C. CARLSON
se045sub8.1

PLOT DATE: 23-AUG-2010
DRAWN BY: D. PETERSON
CHECKED BY: C. CARLSON
SHEET 57 OF 108

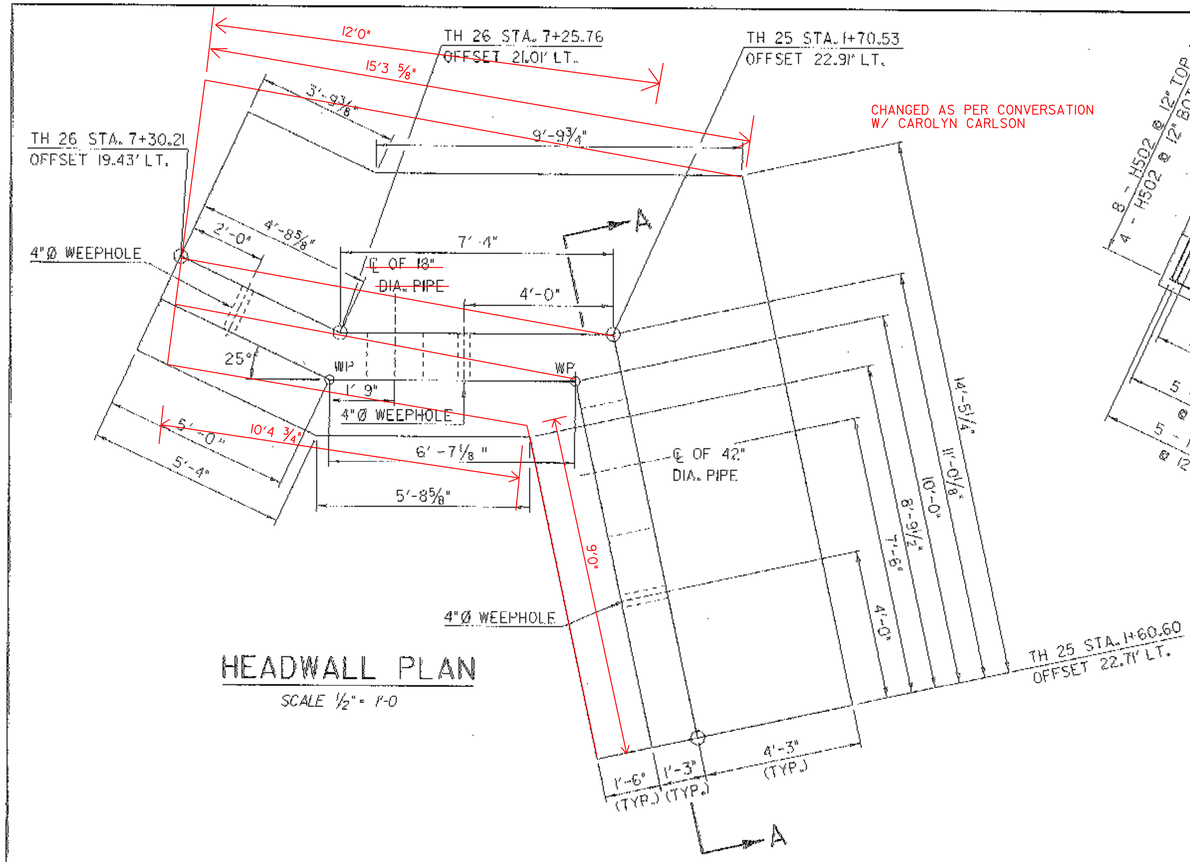

HEADWALL PLAN

SCALE ½" = 1'-0

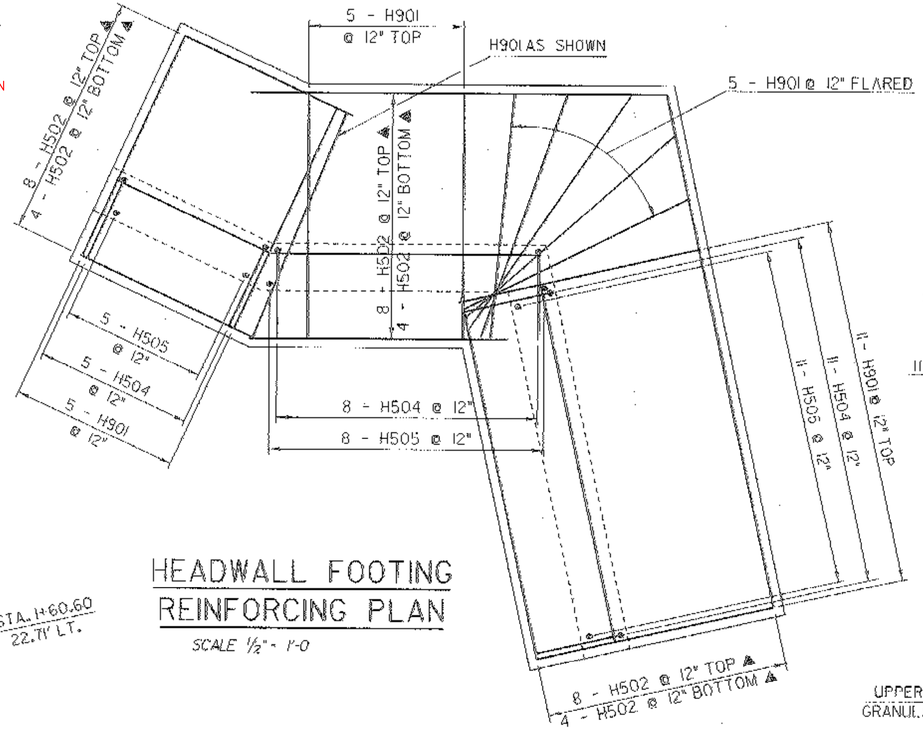

HEADWALL FOOTING REINFORCING PLAN

SCALE ½" = 1'-0

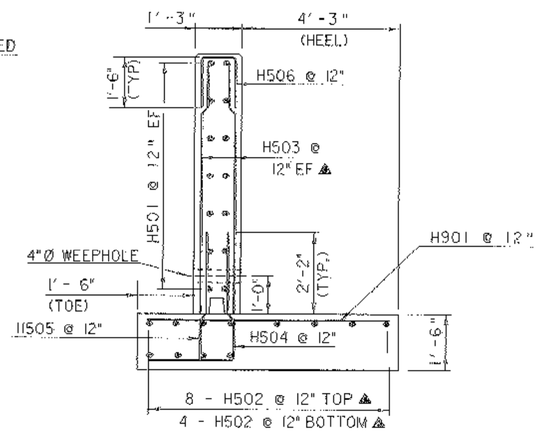

HEADWALL TYPICAL

SCALE ½" = 1'-0

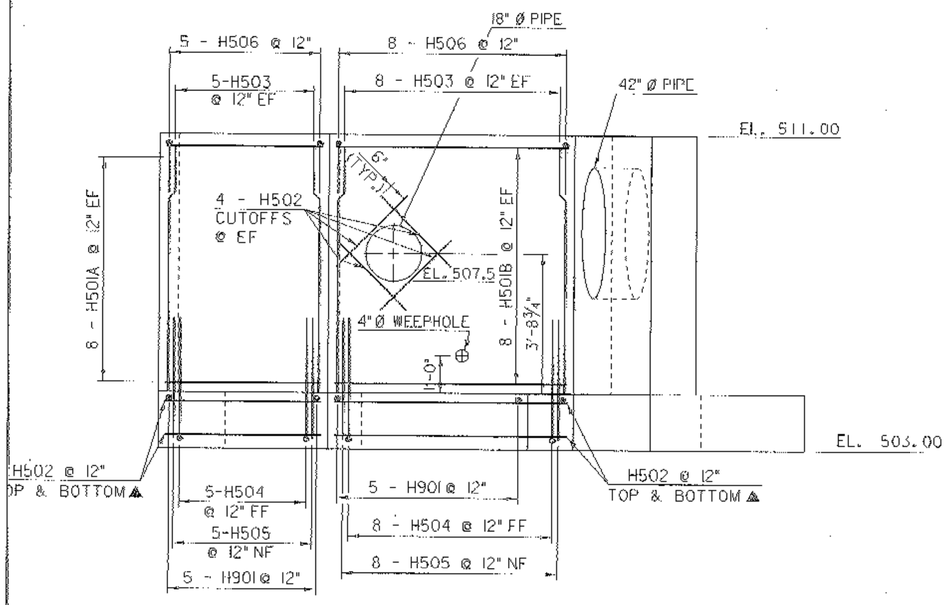

HEADWALL ELEVATION

SCALE ½" = 1'-0

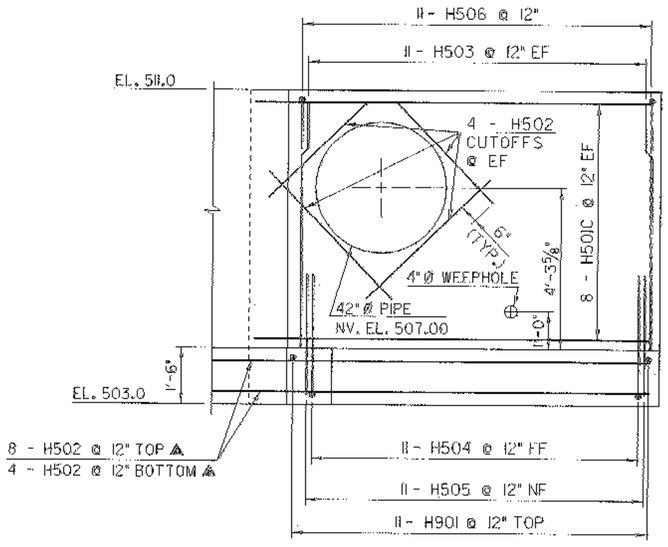

SECTION A-A

SCALE ½" = 1'-0

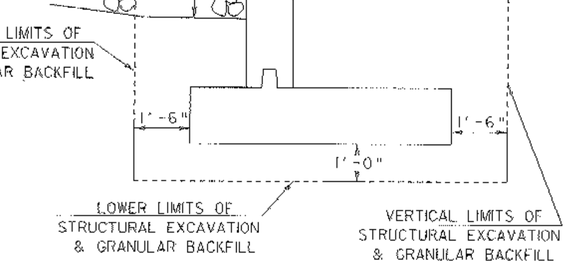

HEADWALL EXCAVATION LIMITS

SCALE ½" = 1'-0

NOTES:

1. NF = NEAR FACE
2. FF = FAR FACE
3. EF = EACH FACE
4. ▲ = CUT TO FIT IN FIELD
5. 3" CLR. UNLESS OTHERWISE SPECIFIED ON THE PLANS.

HEADWALL DETAILS

PROJECT NAME: POWNAL
PROJECT NUMBER: BRZ 1441(19) C/2

FILE NAME: /87e045/str/se045sub.dgn
PROJECT LEADER: R. WHITCOMB
DESIGNED BY: C. CARLSON
se045sub9.i

PLOT DATE: 08-FEB-2008
DRAWN BY: D. PETERSON
CHECKED BY: C. CARLSON
SHEET 58 OF 108

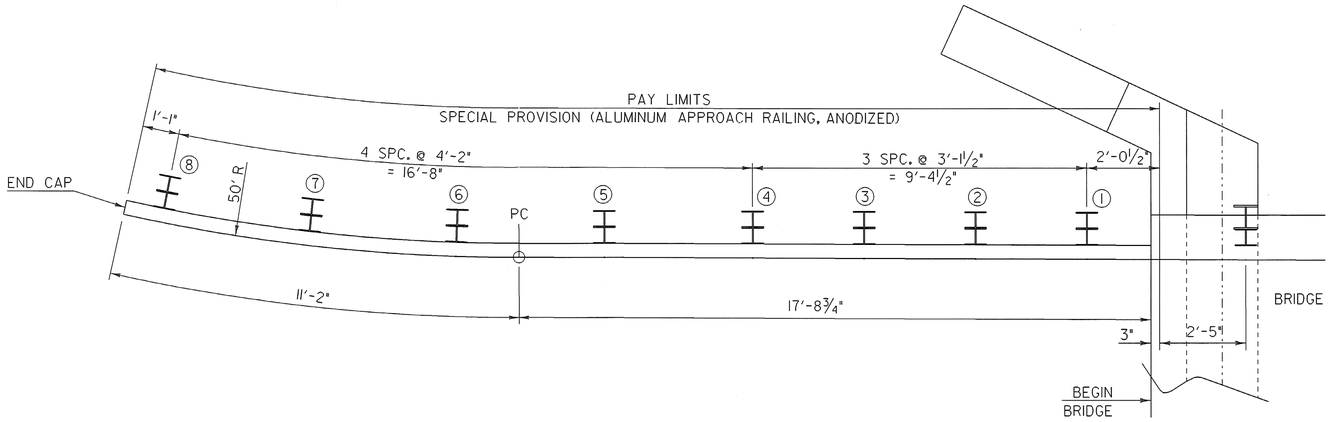

PLAN APPROACH RAILING AT WW#1

SCALE ½" = 1'-0

ALUMINUM APPROACH RAIL
RAIL DIMENSIONS FOR A CURB CONDITION

POST NO.	RAIL HEIGHT DIMENSIONS			OFFSET BLOCK DIMENSIONS			
	A	B	C	D	E	F	G
1	3-4¾	2-5¾	1-0⅜16	0-11⅞16	1-5½	2-9½	
2	3-2¹¹⁄16	2-5⅜	1-0⅝16	0-9¾	1-4¹³⁄16	2-7⅛	
3	3-0⅝	2-4¹⁵⁄16	1-0⅞	0-8⅛	1-4⅛16	2-4¾	
4	2-10⅝16	2-4⅝16	1-1⅜16	0-6⅞16	1-3⅜	2-2⅜	
5		2-4⅛16	1-1⅝		1-2⅞16		1-7⅞16
6		2-3½	1-2⅛16		1-1⅞16		1-6⅞16
7		2-3	1-2½		1-0½		1-5½

ALL REMAINING POSTS ARE TO HAVE THE SAME DIMENSIONS AS POST NO. 7

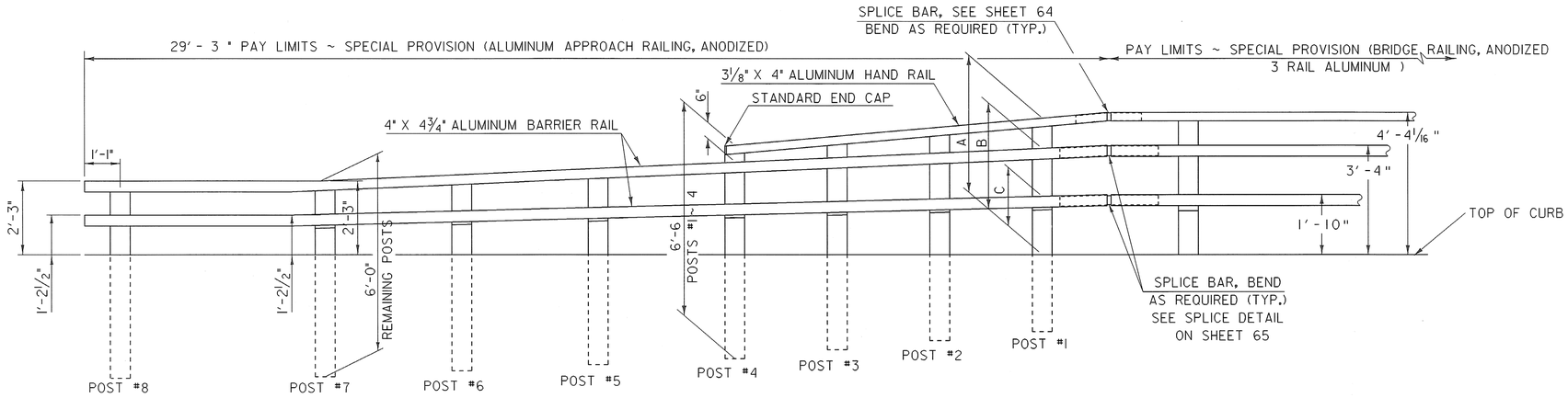

ELEVATION APPROACH RAILING AT WW#1

SCALE ½" = 1'-0

ALUMINUM RAILING DETAILS (SHEET 1)

PROJECT NAME: POWNAL
PROJECT NUMBER: BRZ 1441(19) C/2

FILE NAME: /87e045/str/se045rail.dgn
PROJECT LEADER: R. WHITCOMB
DESIGNED BY: C. CARLSON
se045rail1

PLOT DATE: 08-FEB-2008
DRAWN BY: STR3
CHECKED BY: C. CARLSON
SHEET 59 OF 108

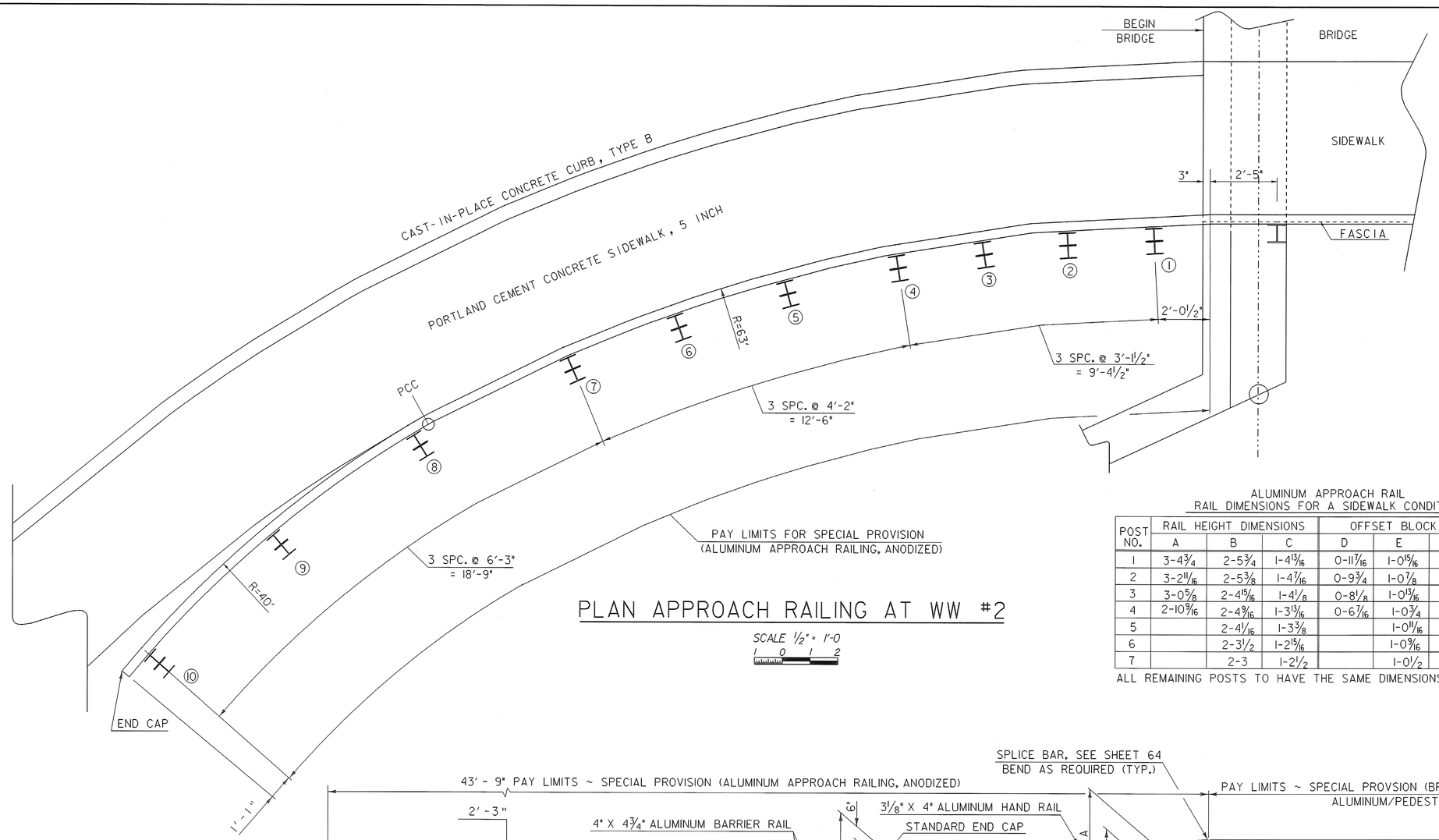

PLAN APPROACH RAILING AT WW #2

SCALE 1/2" = 1'-0

ALUMINUM APPROACH RAIL
RAIL DIMENSIONS FOR A SIDEWALK CONDITION

POST NO.	RAIL HEIGHT DIMENSIONS			OFFSET BLOCK DIMENSIONS			
	A	B	C	D	E	F	G
1	3-4 3/4	2-5 3/4	1-4 13/16	0-11 7/16	1-0 15/16	2-4 15/16	
2	3-2 11/16	2-5 3/8	1-4 7/16	0-9 3/4	1-0 7/8	2-3 3/16	
3	3-0 5/8	2-4 15/16	1-4 1/8	0-8 1/8	1-0 13/16	2-1 1/2	
4	2-10 9/16	2-4 9/16	1-3 13/16	0-6 7/16	1-0 3/4	1-11 3/4	
5		2-4 1/16	1-3 3/8		1-0 11/16		1-5 11/16
6		2-3 1/2	1-2 15/16		1-0 9/16		1-5 5/8
7		2-3	1-2 1/2		1-0 1/2		1-5 1/2

ALL REMAINING POSTS TO HAVE THE SAME DIMENSIONS AS POST NO. 7

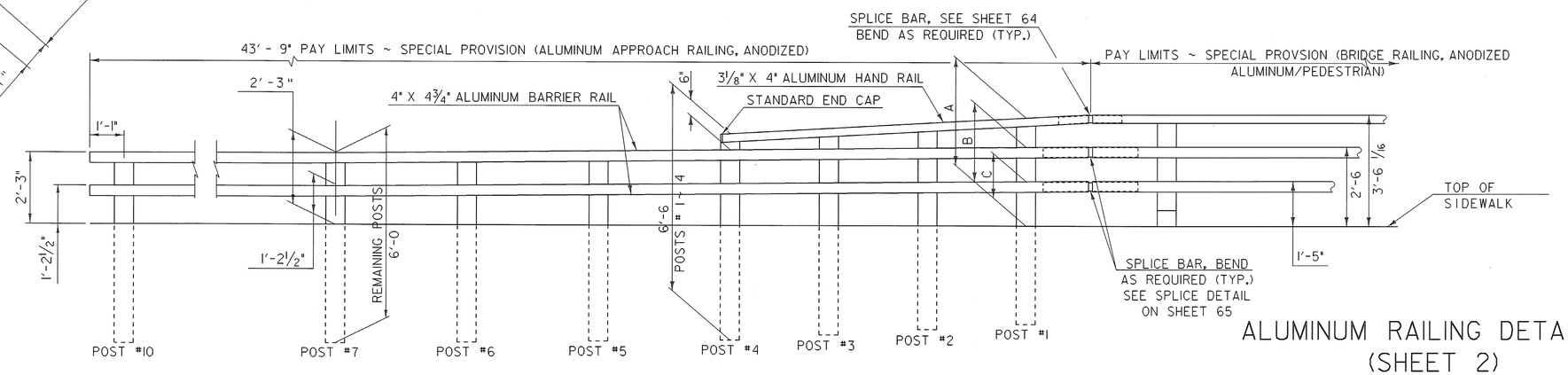

ELEVATION APPROACH RAILING AT WW #2

SCALE 1/2" = 1'-0

ALUMINUM RAILING DETAILS (SHEET 2)

PROJECT NAME:	POWNAL
PROJECT NUMBER:	BRZ 1441(19) C/2

FILE NAME: /87e045/str/se045rail.dgn	PLOT DATE: 08-FEB-2008
PROJECT LEADER: R. WHITCOMB	DRAWN BY: STR3
DESIGNED BY: C. CARLSON	CHECKED BY: C. CARLSON
se045rail2.i	SHEET 60 OF 108

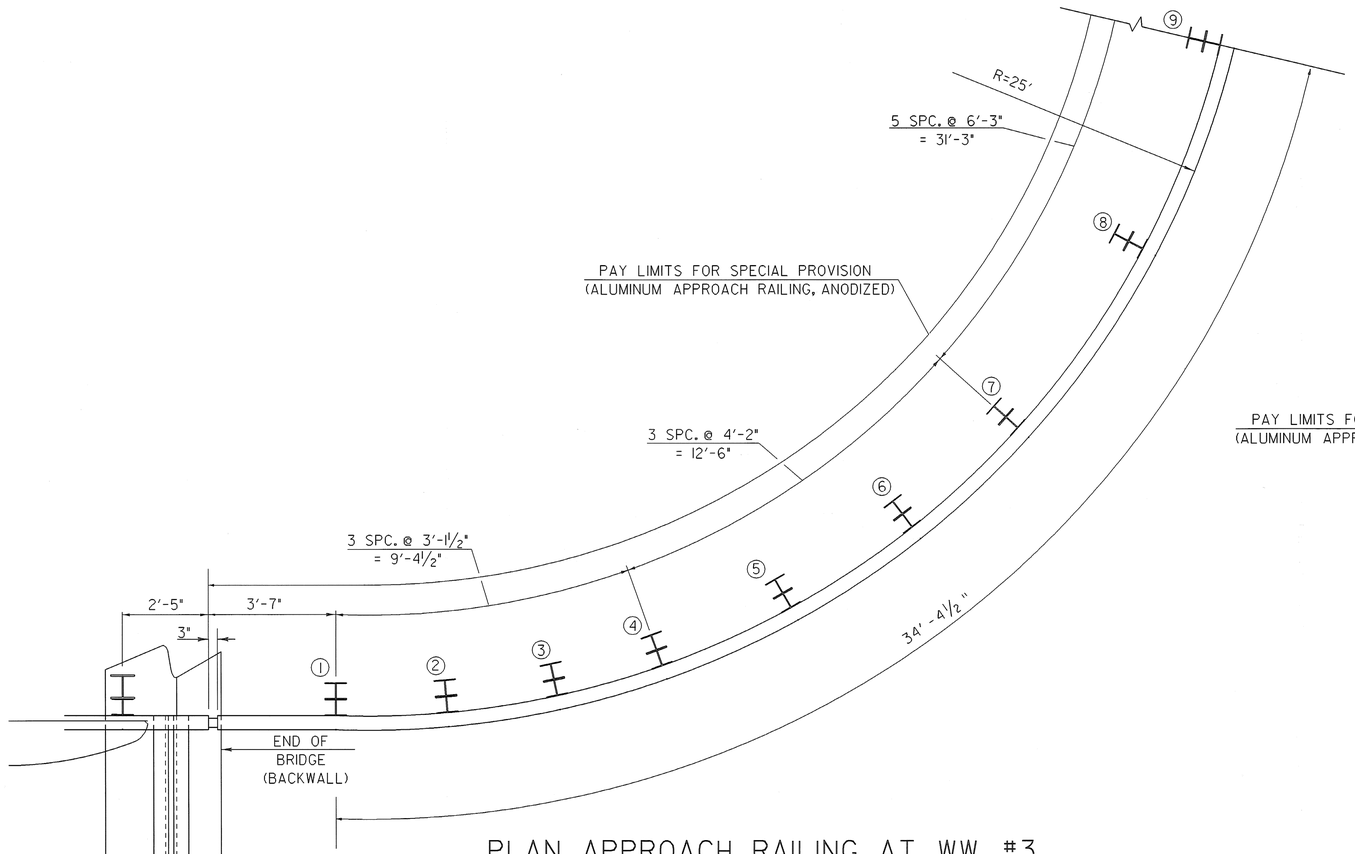

PLAN APPROACH RAILING AT WW #3

SCALE ½" = 1'-0

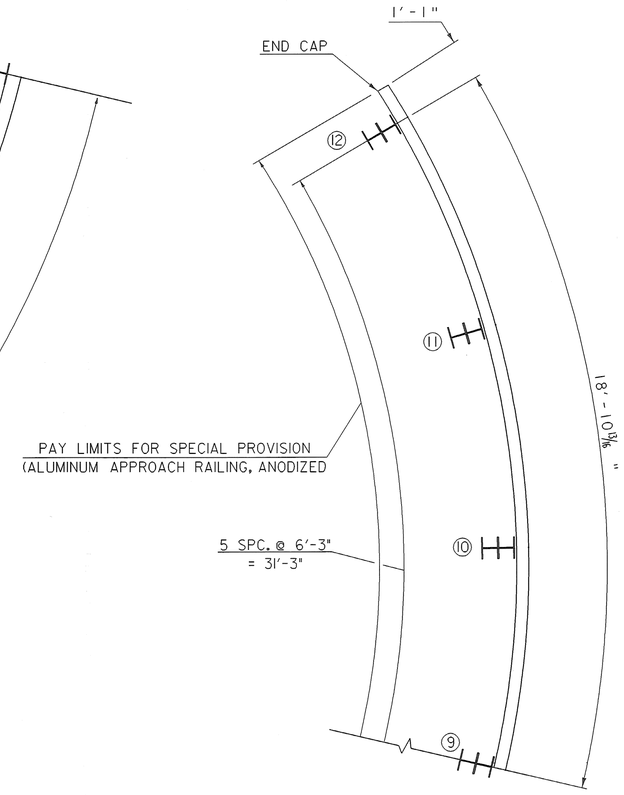

ALUMINUM APPROACH RAIL
RAIL DIMENSIONS FOR A CURB CONDITION

POST NO.	RAIL HEIGHT DIMENSIONS			OFFSET BLOCK DIMENSIONS			
	A	B	C	D	E	F	G
1	4-0 5/8	3-2 1/4	1-9	0-10 15/16	1-5 1/4	2-8 3/4	
2	3-9 5/8	3-0 11/16	1-8 1/16	0-9 7/16	1-4 9/16	2-6 3/16	
3	3-6 9/16	2-11 1/16	1-7 1/8	0-7 15/16	1-3 5/16	2-4 3/8	
4	3-3 7/16	2-9 7/16	1-6 1/4	0-6 7/16	1-3 1/4	2-2 1/4	
5		2-7 5/16	1-5		1-2 5/16		1-7 5/16
6		2-5 1/8	1-3 3/4		1-1 7/16		1-6 7/16
7		2-3	1-2 1/2		1-0 1/2		1-5 1/2

ALL REMAINING POSTS ARE TO HAVE THE SAME DIMENSIONS AS POST NO. 7

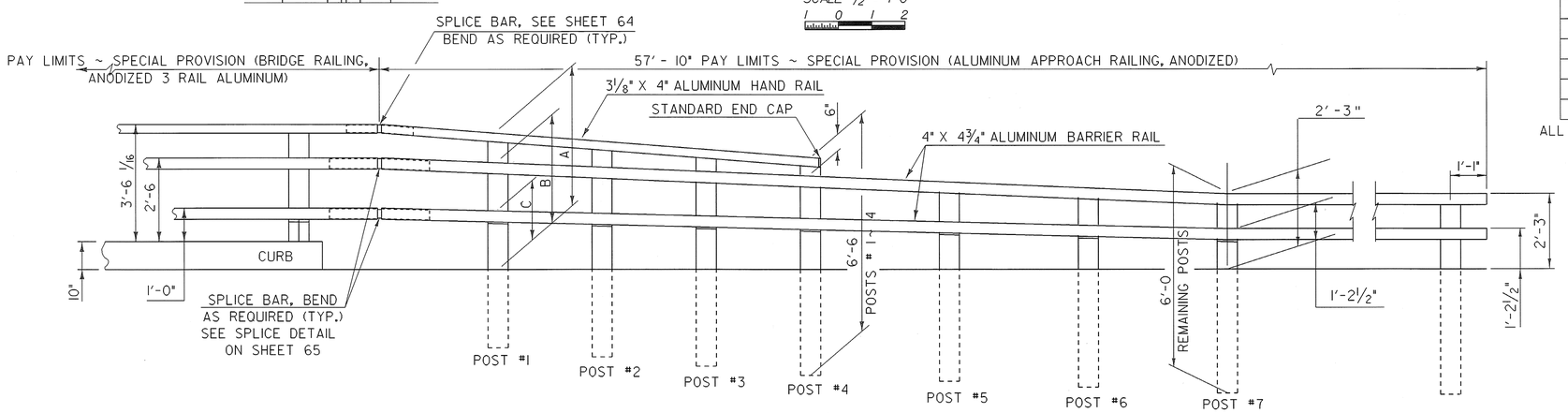

ELEVATION APPROACH RAILING AT WW #3

SCALE ½" = 1'-0

ALUMINUM RAILING DETAILS (SHEET 3)

PROJECT NAME: POWNAL
PROJECT NUMBER: BRZ 1441(19) C/2

FILE NAME: /87e045/str/se045rail.dgn
PROJECT LEADER: R. WHITCOMB
DESIGNED BY: C. CARLSON
se045rail3.i

PLOT DATE: 08-FEB-2008
DRAWN BY: STR3
CHECKED BY: C. CARLSON
SHEET 61 OF 108

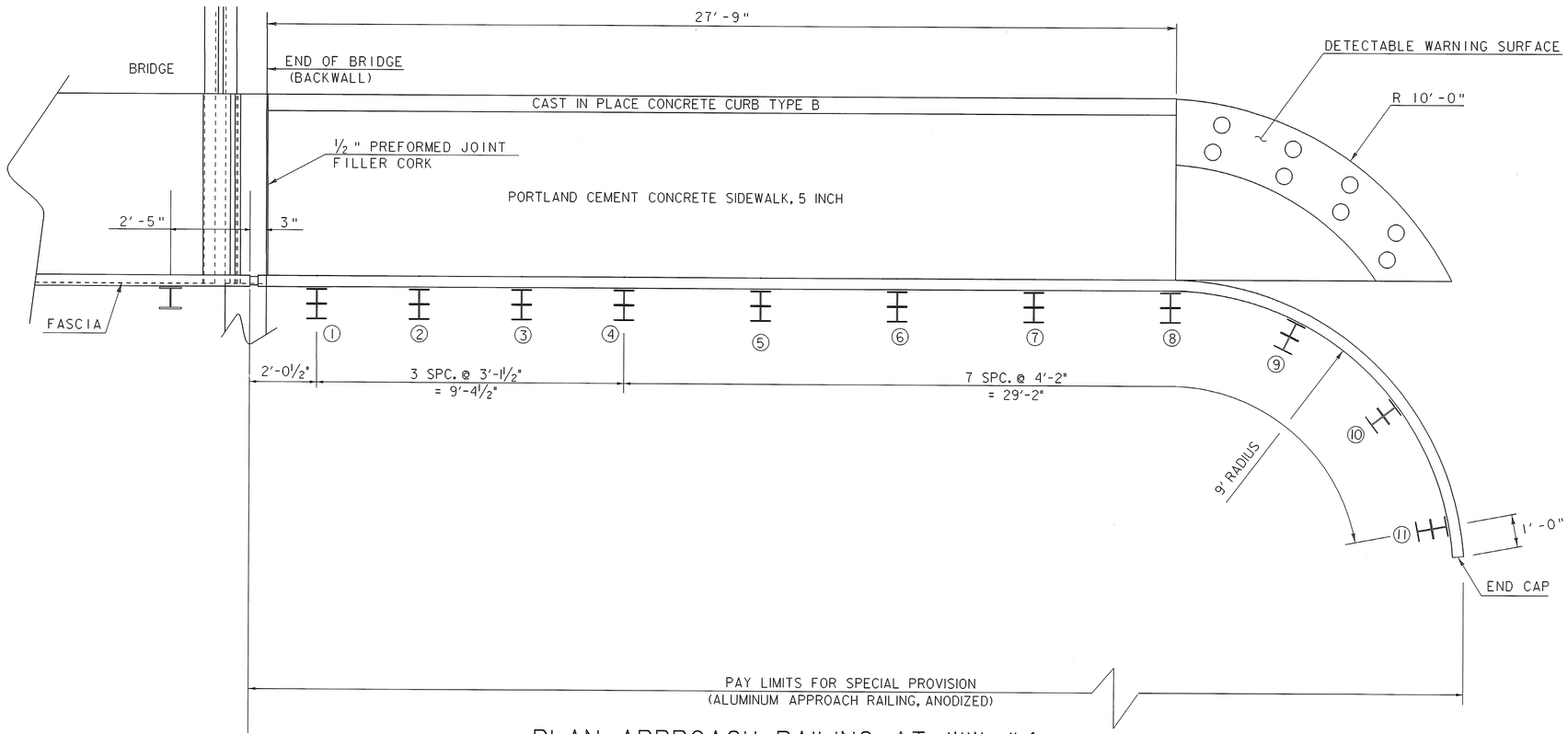

PLAN APPROACH RAILING AT WW #4

SCALE 1/2" = 1'-0

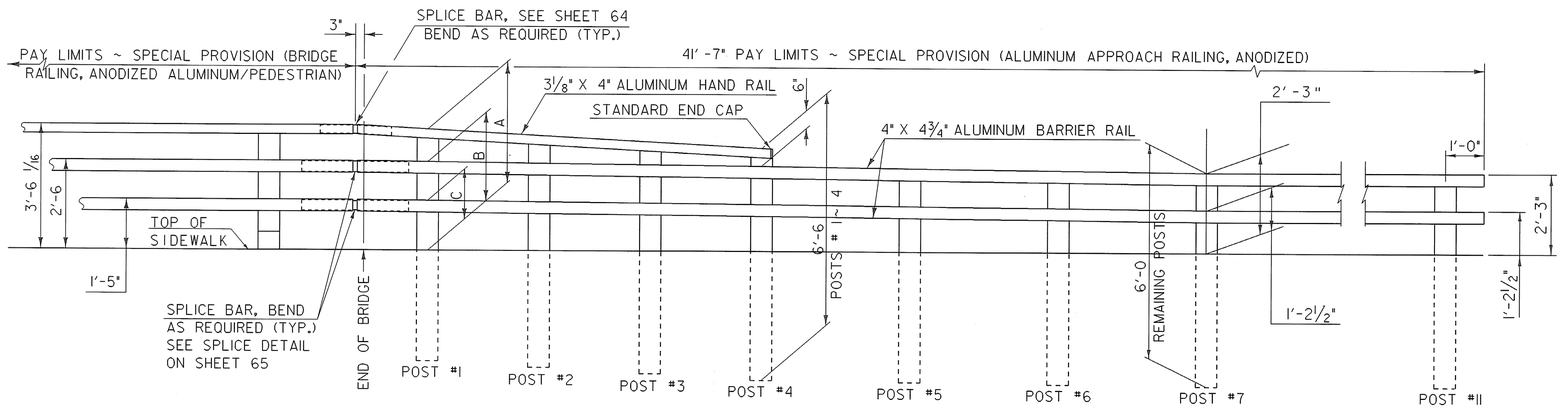

ELEVATION APPROACH RAILING AT WW #4

SCALE 1/2" = 1'-0

ALUMINUM APPROACH RAIL
RAIL DIMENSIONS FOR A SIDEWALK CONDITION

POST NO.	RAIL HEIGHT DIMENSIONS			OFFSET BLOCK DIMENSIONS			
	A	B	C	D	E	F	G
1	3-4 3/4	2-5 3/4	1-4 13/16	0-11 7/16	1-0 15/16	2-4 15/16	
2	3-2 11/16	2-5 3/8	1-4 7/16	0-9 3/4	1-0 7/8	2-3 3/16	
3	3-0 5/8	2-4 5/16	1-4 1/8	0-8 1/8	1-0 13/16	2-1 1/2	
4	2-10 9/16	2-4 9/16	1-3 13/16	0-6 7/16	1-0 3/4	1-11 3/4	
5		2-4 1/16	1-3 3/8		1-0 11/16		1-5 11/16
6		2-3 1/2	1-2 15/16		1-0 9/16		1-5 5/8
7		2-3	1-2 1/2		1-0 1/2		1-5 1/2

ALL REMAINING POSTS TO HAVE THE SAME DIMENSIONS AS POST NO. 7

ALUMINUM RAILING DETAILS (SHEET 4)

PROJECT NAME:	POWNAL
PROJECT NUMBER:	BRZ 1441(19) C/2

FILE NAME: /87e045/str/se045rail.dgn	PLOT DATE: 08-FEB-2008
PROJECT LEADER: R. WHITCOMB	DRAWN BY: STR3
DESIGNED BY: C. CARLSON	CHECKED BY: C. CARLSON
se045rail4.i	SHEET 62 OF 108

DELINEATOR NOTES

THIS REFLECTORIZED ALUMINUM DELINEATOR IS TO BE ERECTED EVERY 30 FEET (OR CLOSEST POST) WITH 2 NO. 8 X ¾" SELF-TAPPING SCREWS.

DELINEATORS SHALL MEET SPECIFICATION REQUIREMENTS OF SUBSECTION 751.04.

REFLECTIVE MATERIAL SHALL MEET THE REQUIREMENTS OF SUBSECTION 750.08 AND SHALL BE OF ENCAPSULATED LENS SILVER OR AMBER. AMBER IS TO BE INSTALLED ON THE DRIVER'S LEFT AND SILVER ON THEIR RIGHT.

ON BRIDGES WITH A SIDEWALK, DELINEATORS ARE NOT TO BE INSTALLED ON THE SIDEWALK SIDE OF THE BRIDGE (I.E. DELINEATORS INSTALLED ONLY ON THE CURB SIDE AND ON THE APPROACH RAIL ON THE CURB SIDE)

PAYMENT SHALL BE INCIDENTAL TO ALL OTHER BRIDGE RAILING ITEMS.

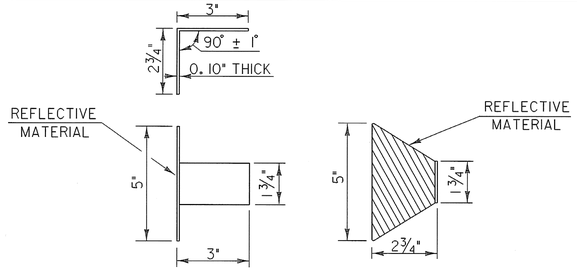

REFLECTOR DETAILS

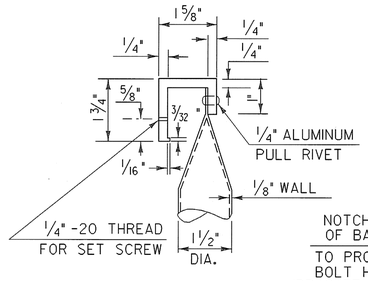

DETAIL A

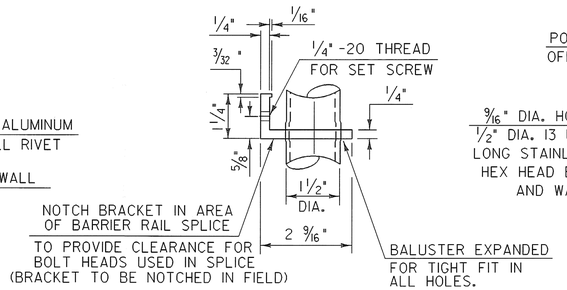

DETAIL B

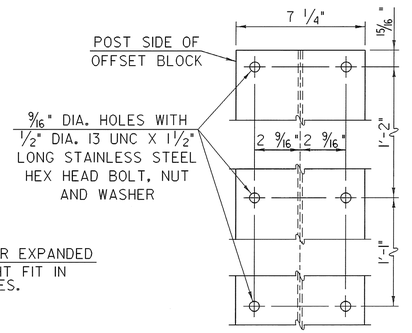

OFFSET BLOCK CONNECTION

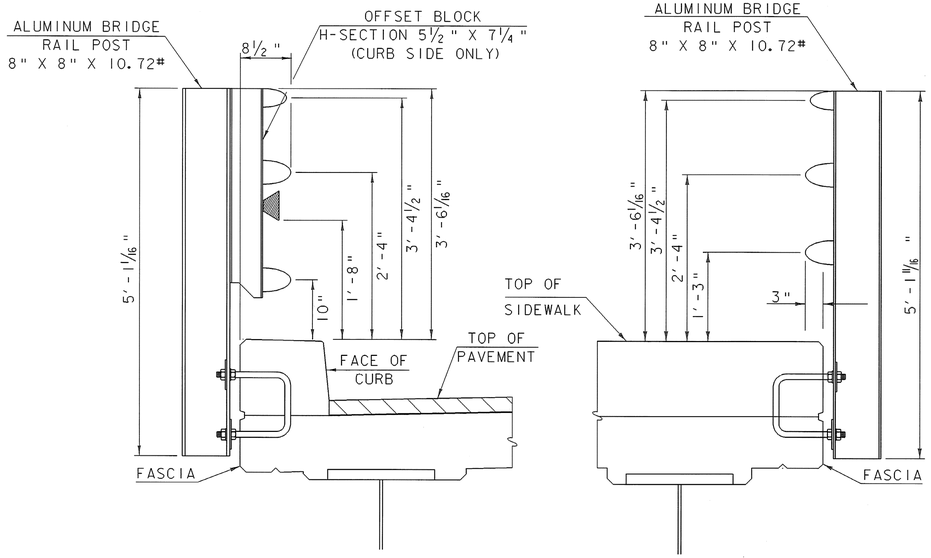

RAIL POST DETAILS ON SUPERSTRUCTURE

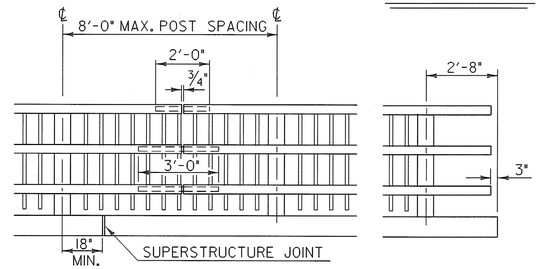

FRONT ELEVATION OF THREE RAIL WITH SPINDLES

NOTES: RAIL POSTS ARE TO BE SET NORMAL TO GRADE UNLESS OTHERWISE DESIGNATED ON BRIDGE PLANS. ALL DIMENSIONS ARE TYPICAL UNLESS OTHERWISE DESIGNATED ON BRIDGE PLANS.

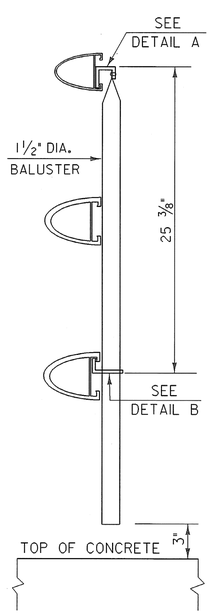

SECTION AA

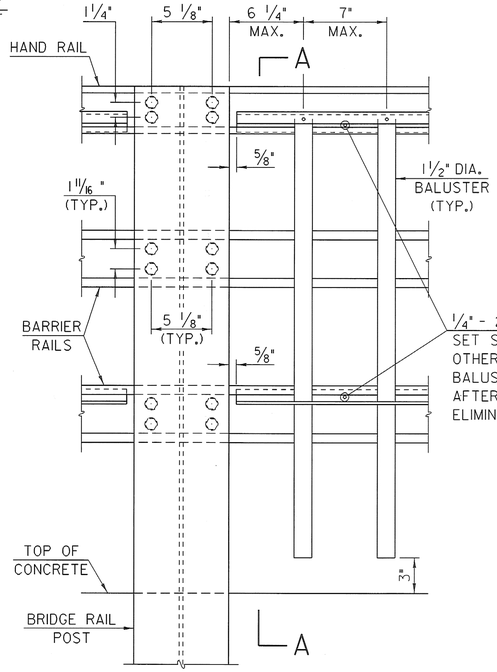

OUTSIDE ELEVATION OF THREE RAIL POST & SPINDLES

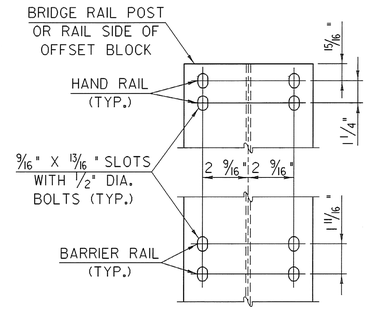

RAIL CONNECTION

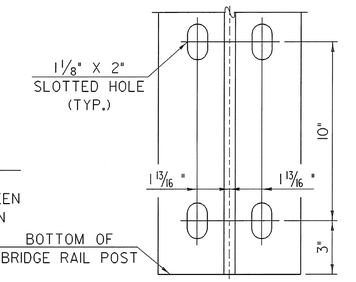

POST ANCHORAGE BOLT HOLE DETAILS

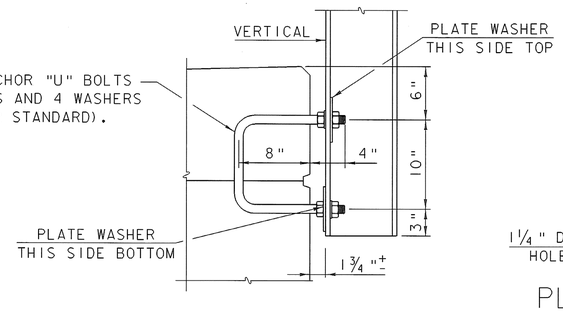

ANCHORAGE DETAIL

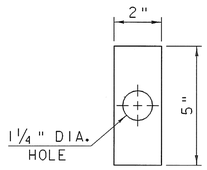

PLATE WASHER DETAIL

DETAILS OF SPINDLES FOR ALUMINUM RAILING

ALUMINUM RAILING DETAILS (SHEET 5)

PROJECT NAME:	POWNAL
PROJECT NUMBER:	BRZ 1441(19) C/2
FILE NAME: /87e045/str/se045rail.dgn	PLOT DATE: 08-FEB-2008
PROJECT LEADER: R. WHITCOMB	DRAWN BY: STR3
DESIGNED BY: C. CARLSON	CHECKED BY: C. CARLSON
se045rail5.i	SHEET 63 OF 108

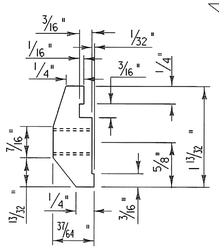

POST CONNECTION HAND RAIL SECTION

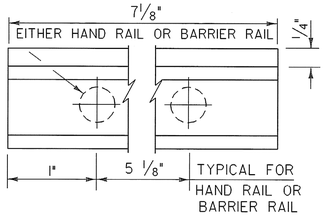

POST CONNECTION ELEVATION

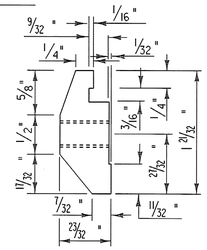

POST CONNECTION BARRIER RAIL SECTION

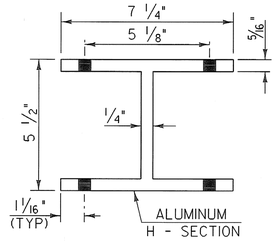

PLAN VIEW OF OFFSET BLOCK (TO BE USED ON SUPERSTRUCTURE ON CURB SIDE)

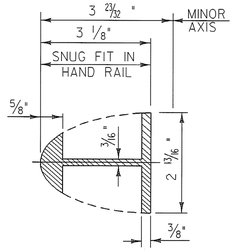

HAND RAIL SPLICE SECTION

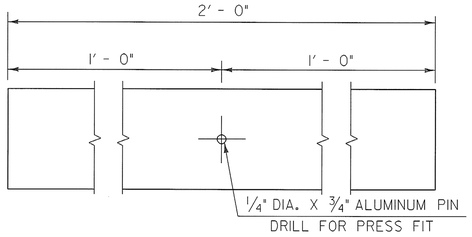

ELEVATION OF HAND RAIL SPLICE BAR

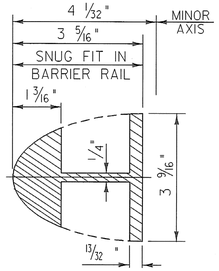

BARRIER RAIL SPLICE SECTION

(SEE SHEET 65 FOR ELEVATION OF BARRIER RAIL SPLICE BAR)

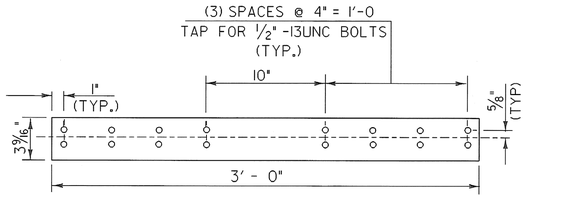

ELEVATION OF STD. BARRIER RAIL SPLICE BAR (FROM BACK)

NOTES

1. ANCHOR BOLTS, NUTS AND WASHERS SHALL CONFORM TO SUBSECTION 714.07.
2. ALUMINUM SPLICE BARS, CONNECTION BARS, RAILS AND BALLUSTER FRAMES SHALL CONFORM TO ASTM B221, ALLOY 6061-T6 OR ALLOY 6351-T5. MINIMUM ALLOWABLE STRESS Fy = 35,000 psi. RAIL POSTS SHALL CONFORM TO ASTM B 308/ B 308M.
3. ALUMINUM BALUSTER TUBES SHALL CONFORM TO ASTM B221 ALLOY 6061-T4 OR 6063-T4.
4. ALUMINUM RAIL END CAPS SHALL CONFORM TO ASTM B26 ALLOY 356-T6.
5. THE POST, RAIL, AND OFFSET BLOCK CONNECTION BOLTS AND SET SCREWS SHALL CONFORM TO SUBSECTION 732.02 (b).
6. WELDING SHALL CONFORM TO THE REQUIREMENTS OF SUBSECTION 506.10.
7. UNLESS OTHERWISE SPECIFIED, ANCHOR BOLTS SHALL BE CAST INTO THE CONCRETE AS DETAILED.
8. WHENEVER FEASIBLE, BARRIER RAIL AND HAND RAIL SECTIONS SHALL BE FULL LENGTH SECTIONS (40'+) AND WHEN POSSIBLE SHALL BE ATTACHED TO THREE POSTS. RAILS SHALL BE SPLICED AT EACH DECK JOINT AND INTERMITTENTLY AS REQUIRED. SPLICES SHALL OCCUR WITHIN THE SAME PANEL.
9. ENDS OF RAILS SHALL BE CUT SQUARE AND GROUND FREE OF BURRS OR RAGGED EDGES. EXPOSED ENDS SHALL BE CAPPED.
10. EXTRUDED SECTIONS ARE DETAILED TO COMPLY WITH CURRENT AASHTO-AGC-ARTBA STANDARDS. MINOR VARIATIONS OF THE DETAILS SHOWN MAY BE CONSIDERED PROVIDING THEY DO NOT REDUCE THE STRENGTH CAPACITY OF THE RAIL SYSTEM.
11. ALUMINUM PLATE WASHERS SHALL BE ASTM B209 ALLOY ACLAD 2024-T4.
12. THE RAILING SYSTEM AND ASSOCIATED HARDWARE SHALL BE ANODIZED TO A BLACK SATIN FINISH EXCEPT AS NOTED, SEE SPECIAL PROVISIONS.

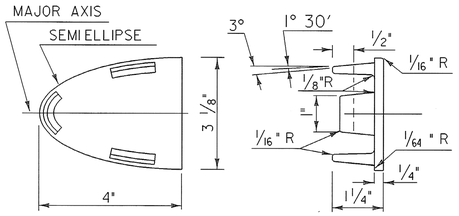

HAND RAIL END CAP

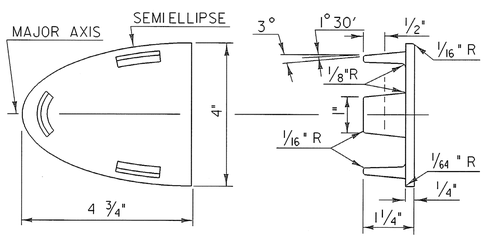

BARRIER RAIL END CAP

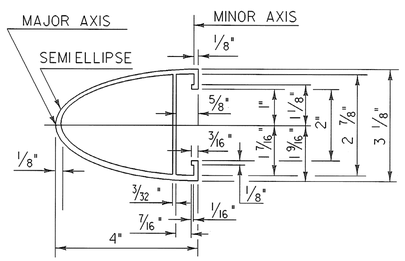

HAND RAIL SECTION

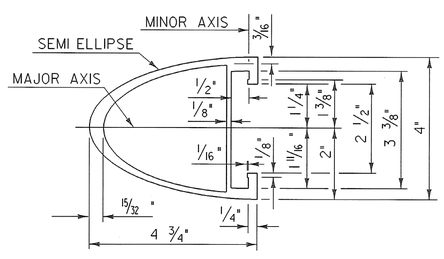

BARRIER RAIL SECTION

(SEE SHEET 65 FOR ELEVATION OF BARRIER RAIL)

ALUMINUM RAILING DETAILS (SHEET 6)

PROJECT NAME:	POWNAL
PROJECT NUMBER:	BRZ 1441(19) C/2

FILE NAME: /87e045/str/se045rail.dgn	PLOT DATE: 08-FEB-2008
PROJECT LEADER: R. WHITCOMB	DRAWN BY: STR3
DESIGNED BY: C. CARLSON	CHECKED BY: C. CARLSON
se045rail6.i	SHEET 64 OF 108

	SIDEWALK SIDE	CURB SIDE
"X"	5/8"	1 1/16"
"Y"	1/8"	1/2"
"Z"	1/8"	5/16"

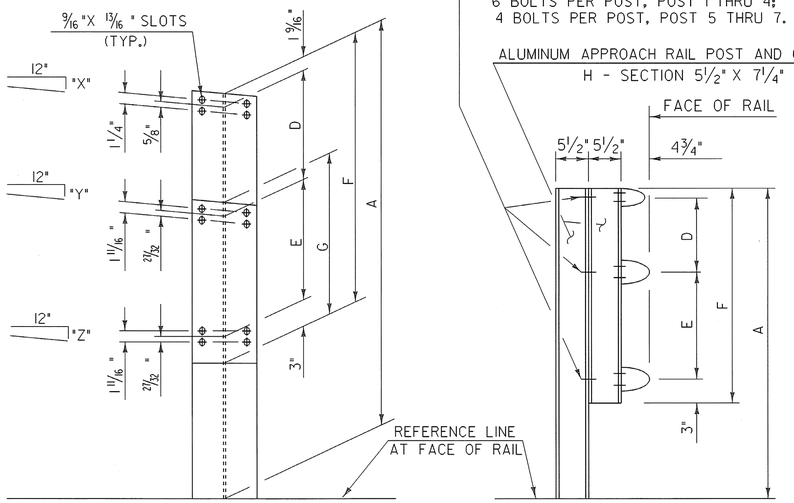

FRONT ELEVATION

SIDE ELEVATION

APPROACH RAIL DETAILS

	WW1	WW2	WW3	WW4
"X"	11/16"	11/16"	15/16"	11/16"
"Y"	1/8"	1/8"	1/2"	1/8"
"Z"	1/8"	1/8"	5/16"	1/8"

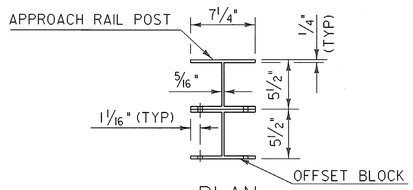

PLAN

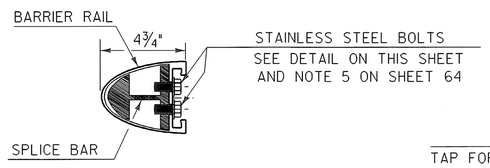

TYPICAL SECTION THROUGH BARRIER RAIL SPLICE

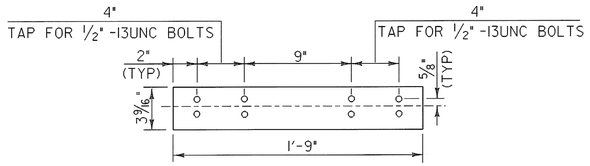

ELEVATION OF BARRIER RAIL SPLICE BAR TO BE USED AT TRANSITION BETWEEN APPROACH RAIL & GUARD RAIL (FROM BACK)

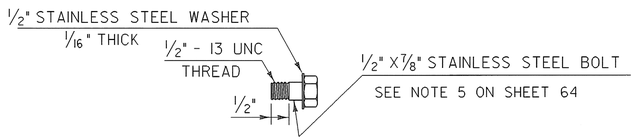

STAINLESS STEEL BOLT DETAILS

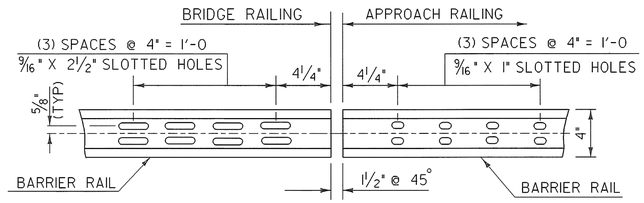

ELEVATION OF BARRIER RAIL (FROM BACK)

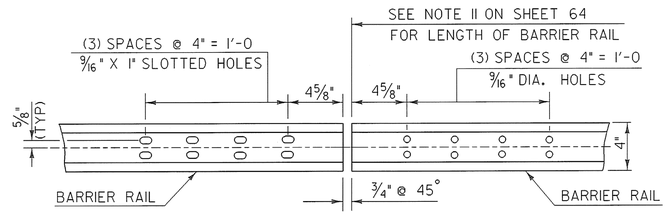

ELEVATION OF BARRIER RAIL (FROM BACK) AT ALL INTERMEDIATE RAIL SPLICES

APPROACH RAILING NOTES

1. ALL APPROACH RAILING POSTS SHALL BE EXTRUDED ALUMINUM.
2. ANY STRUCTURAL STEEL SHALL BE GRADE 36 GALVANIZED AFTER FABRICATION.
3. ALL ITEMS NOT OTHERWISE INDICATED SHALL MEET THE SPECIFICATION REQUIREMENTS OF THE STANDARD SHEETS ON WHICH THEY ARE DETAILED.
4. DETAILS ARE SHOWN FOR TRANSITION TO A 3 RAIL ALUMINUM BRIDGE RAILING.
5. DIMENSIONS SHOWN ARE FROM A REFERENCE LINE AT THE FACE OF POST FOR A NORMAL CROWNED SECTION. APPROPRIATE CORRECTIONS SHALL BE MADE FOR CROSS SLOPES OTHER THAN A NORMAL SECTION.
6. THE APPROACH RAILING SYSTEM AND RELATED HARDWARE SHALL BE ANODIZED TO A BLACK SATIN FINISH. (SEE SPECIAL PROVISIONS.)

ALUMINUM RAILING DETAILS (SHEET 7)

PROJECT NAME: POWNAL
PROJECT NUMBER: BRZ 1441(19) C/2

FILE NAME: /87e045/str/se045rail.dgn
PROJECT LEADER: R. WHITCOMB
DESIGNED BY: C. CARLSON
se045rail7.i

PLOT DATE: 08-FEB-2008
DRAWN BY: STR3
CHECKED BY: C. CARLSON
SHEET 65 OF 108

STATE OF VERMONT
AGENCY OF TRANSPORTATION

REINFORCING STEEL SCHEDULE

ITEM	EACH	SIZE	LENGTH	MARK	TYPE	A	B	C	D	E	F	G	H	J	K	R	O
APPROACH SLAB NO. 1																	
▲	16	5	24'- 8"	1EAS501	STR												
✳	4	5	9'- 0"	1EAS502	STR												
✳	48	6	15'- 1"	1EAS601	1	0'- 8"	14'- 5"					---		---			
	15	8	4'- 6"	1EAS801	19	2'- 6"	2'- 0"										
APPROACH SLAB NO. 2																	
✳ ▲	17	5	26'- 5"	2EAS501	STR												
	3	5	8'- 8"	2EAS504	9		8'- 8"									25'- 0"	8'- 7"
✳	49	6	15'- 2"	2EAS601	1	0'- 8"	14'- 6"					---		---			
△	15	8	4'- 6"	1EAS801	19	2'- 6"	2'- 0"										
DECK																	
	26	5	42'- 0"	ES501	STR												
▲	6	5	29'- 11"	ES502	STR												
	84	5	39'- 4"	ES506	STR												
▲	5	5	10'- 0"	2ES509	STR												
✳	704	6	29'- 11"	ES601	STR												
	518	6	40'- 0"	ES602	STR												
✳	25	5	7'- 5"	ES503	S5	2'- 2"	0'- 5"	1'- 9"	0'- 11"			2'- 2"					
	235	5	4'- 8"	ES504	S5	1'- 0"	1'- 5"	0'- 10"	5"			1'- 0"					
	235	5	10'- 1"	ES505	S5	1'- 0"	1'- 7"	4'- 11"	1'- 7"			1'- 0"					
	25	5	8'- 10"	ES507	S5	2'- 2"	0'- 10"	2'- 2"	0'- 6"			2'- 2"					
ABUTMENT NO.1																	
▲	41	5	8'- 11"	1A502	STR												
	6	5	19'- 4"	1A505A	STR												
	6	5	20'- 8"	1A505B	STR												
③ ▲	24	5	19'- 1"	1A506A	STR												
④	24	5	21'- 1"	1A506B	STR												
✳ ▲	7	5	5'- 5"	1A507	STR	③											
③ ▲	16	5	6'- 5"	1A508	STR												
	51	5	4'- 8"	1A509	STR												
	14	5	3'- 10"	1A510	STR												
④	7	5	2'- 10"	1A513	STR												
	36	8	4'- 0"	1A801	STR												
④	14	8	4'- 11"	1A802	STR												
	16	8	4'- 0"	1A804	STR												
	4	8	6'- 2"	1A805	STR												
	27	5	9'- 3"	1A501	23		3'- 6"	0'- 6"	0'- 6"	1'- 9"	3'- 0"	--		1'- 9"			
	38	5	6'- 3"	1A503	S10		4'- 3"	1'- 9"	0'- 3"								
	35	5	5'- 0"	1A504	S10		1'- 9"	1'- 6"	1'- 9"								
	12	5	3'- 4"	1A511	17		1'- 5"	0'- 6"	1'- 5"								
	6	5	9'- 10"	1A512	17		4'- 2"	5'- 8"	--								
	70	8	4'- 6"	1A803	19		1'- 6"	3'- 0"	---			---		---			
	9	8	8'- 0"	1A806	1	0'- 11"	6'- 2"	0'- 11"									
WINGWALL NO.1																	
③ ▲	18	5	12'- 8"	1W501	STR												
③ ▲	32	5	8'- 9"	1W502	STR	④											
	18	5	9'- 5"	1W504	STR												
	10	5	4'- 2"	1W507	STR												
✳ ▲	11	8	7'- 6"	1W801	STR												
▲	7	5	3'- 10"	1W503	S10		1'- 5"	1'- 0"	1'- 5"								
	6	5	9'- 3"	1W505	17		6'- 9"	2'- 6"	---								
	7	5	6'- 8"	1W506	17		4'- 2"	2'- 6"	---								
	2	5	4'- 4"	1W508	19		0'- 9"	6'- 9"	---				0'- 9"		0'- 1"		
③	51	5	4'- 4"	1W509	19	④	2'- 2"	2'- 2"	---				1'- 11"		0'- 11"		
	12	8	8'- 5"	1W802	1	0'- 11"	7'- 6"	0'- 11"									
④	7	7	14'- 8"	1W701	STR												
④	7	7	6'- 0"	1W702	17		3'- 6"	2'- 6"	---								
④	6	8	8'- 1"	1W803	17		5'- 7"	2'- 6"	---								
WINGWALL NO.2																	
③ ▲	17	5	12'- 9"	2W501	STR												
③ ▲	32	5	8'- 9"	2W502	STR	④											
✳ ▲	19	5	9'- 5"	2W504	STR												
④	14	5	4'- 2"	2W507	STR												
▲	9	8	7'- 6"	2W801	STR												
	7	5	3'- 10"	2W503	S10		1'- 5"	1'- 0"	1'- 5"								
	4	5	9'- 3"	2W505	17		6'- 9"	2'- 6"	---								
	4	5	6'- 6"	2W506	17		4'- 2"	2'- 6"	---								
	2	5	7'- 6"	2W508	19		0'- 9"	6'- 9"					0'- 9"		0'- 1"		
③	37	5	4'- 4"	2W509	19	④	2'- 2"	2'- 2"	---				1'- 11"		0'- 11"		
▲	10	8	8'- 5"	1W802	1	0'- 11"	7'- 6"	0'- 11"									

ITEM	EACH	SIZE	LENGTH	MARK	TYPE	A	B	C	D	E	F	G	H	J	K	R	O
④	4	7	14'- 8"	2W701	STR												
④	4	7	6'- 0"	2W702	17		3'- 6"	2'- 6"	---								
④	4	8	8'- 1"	2W803	17		5'- 7"	2'- 6"	---								
ABUTMENT NO.2																	
▲	40	5	7'- 4"	2A502	STR												
	7	5	18'- 4"	2A505A	STR												
	6	5	21'- 8"	2A505B	STR												
	15	5	18'- 4"	2A506A	STR												
▲	15	5	23'- 2"	2A506B	STR												
	77	5	4'- 6"	2A509	STR												
	14	5	3'- 3"	2A510	STR												
	3	5	2'- 8"	2A511	STR												
	36	8	3'- 11"	2A801	STR												
	12	8	4'- 6"	2A802	STR												
✳	5	5	5'- 8"	2A804	STR												
	28	5	9'- 3"	2A501	17		3'- 9"	1'- 9"	3'- 9"								
	36	5	9'- 2"	2A503	17		3'- 9"	1'- 8"	3'- 9"								
	35	5	4'- 3"	2A504	17		1'- 9"	1'- 6"	1'- 9"								
	36	5	10'- 11"	2A508	17		5'- 1"	0'- 9"	5'- 1"								
	6	5	8'- 11"	2A507	17		4'- 2"	4'- 9"	---								
	66	8	4'- 3"	2A803	19		1'- 3"	3'- 0"	---				---		---		
	12	8	4'- 2"	2A805	1	0'- 11"	3'- 3"	---									
WINGWALL NO.3																	
▲	27	5	10'- 1"	3W501	STR												
▲	22	5	13'- 9"	3W502	STR												
	12	5	5'- 0"	3W503	S10		2'- 0"	1'- 0"	2'- 0"								
▲	10	5	14'- 6"	3W504	STR												
	15	5	3'- 11"	3W506	STR												
	2	5	11'- 9"	3W507	STR		0'- 9"	11'- 0"	---				0'- 2"		0'- 8"		
✳ ▲	16	7	5'- 9"	3W701	STR												
	23	5	6'- 6"	3W505	17		4'- 3"	2'- 3"	---			---					
	36	5	4'- 4"	3W509	19		2'- 2"	2'- 2"	---				1'- 9"		1'- 3"		
WINGWALL NO.4																	
	8	5	7'- 1"	4W501	STR												
▲	20	5	8'- 6"	4W502	STR												
	9	5	5'- 9"	4W504	STR												
	7	5	3'- 11"	4W506	STR												
	20	5	6'- 3"	4W507	STR												
✳	5	5	11'- 9"	4W508	STR												
	6	5	10'- 6"	4W510	STR												
	7	8	7'- 0"	4W801	STR												
	4	8	4'- 2"	4W802	STR												
	10	5	5'- 4"	4W503	17		2'- 2"	1'- 0"	2'- 2"								
	13	5	11'- 5"	4W505	17		2'- 6"	8'- 11"	---			--					
	30	5	4'- 4"	4W509	17		2'- 2"	2'- 2"	---								
PIER																	
✳	7	5	27'- 8"	P502	STR												
	5	6	25'- 6"	P601	STR												
✳	7	6	25'- 9"	P602	STR												
	31	6	4'- 11"	P603	STR												
	2	5	12'- 11"	P501	T3										2'- 2"		3'- 5"
	52	5	8'- 1"	P503	17		2'- 10"	2'- 5"	2'- 10"								
	6	6	10'- 6"	P604	S11								4'- 3"				3'- 5"
	9	6	9'- 6"	P605	16	--	5'- 6"	1'- 10"	2'- 2"								
▲	3	6	6'- 2"	P606	19		1'- 11"	4'- 3"	---				---		---		
HEADWALL																	
▲	16	5	4'- 8"	H501A	STR												
✳ ▲	17	5	7'- 0"	H501B	STR												
▲	16	5	10'- 6"	H501C	STR												
▲	36	5	13'- 11"	H502	STR												
	37	5	6'- 3"	H503	STR												
	37	5	3'- 5"	H505	STR												
✳	28	9	6'- 6"	H901	STR												
	37	5	5'- 8"	H504	2		2'- 3"	3'- 5"	---								
	37	5	3'- 9"	H506	S10		1'- 6"	0'- 9"	1'- 6"								

~ NOTES ~

1. UNLESS OTHERWISE DESIGNATED, ALL BAR REINFORCEMENT FOR CONCRETE IN SIZES UP TO AND INCLUDING NO. 18 SHALL CONFORM TO THE REQUIREMENTS OF THE "SPECIFICATIONS FOR DEFORMED BILLET-STEEL BARS FOR CONCRETE REINFORCEMENT", AASHTO M 31 (ASTM A 615-SI). ALL BARS SHALL BE GRADE 60, UNLESS OTHERWISE DESIGNATED.
2. FOR TYPICAL BENDING DETAILS, RECOMMENDED PIN DIAMETER "D" OF BENDS AND HOOKS, AND OTHER STANDARD PRACTICE, SEE CURRENT CONCRETE REINFORCING STEEL INSTITUTE "MANUAL OF STANDARD PRACTICE".
3. BARS WHICH REQUIRE MORE ACCURATE BENDING THAN STANDARD PRACTICES SHOULD HAVE LIMITS INDICATED.
4. ALL DIMENSIONS ARE OUT TO OUT OF BAR EXCEPT "A" AND "G" ON STANDARD 180 DEGREE AND 135 DEGREE HOOKS.
5. "J" DIMENSION ON 180 DEGREE HOOKS TO BE SHOWN ONLY WHERE NECESSARY TO RESTRICT HOOK SIZE. OTHERWISE, STANDARD HOOKS ARE TO BE USED.
6. "H" DIMENSION ON STIRRUPS TO BE SHOWN ONLY WHEN NECESSARY TO MAINTAIN CLEARANCES.
7. WHERE SLOPE DIFFERS FROM 45 DEGREES, DIMENSIONS "H" AND "K" MUST BE SHOWN.
8. ▲ DENOTES BARS TO BE CUT IN FIELD.
9. ✳ DENOTES ONE EXTRA BAR ADDED FOR TESTING PURPOSES.
10. △ DENOTES TWO EXTRA BARS ADDED FOR TESTING PURPOSES.
11. E IN BAR MARK PREFIX DENOTES EPOXY COATED REINFORCING STEEL.

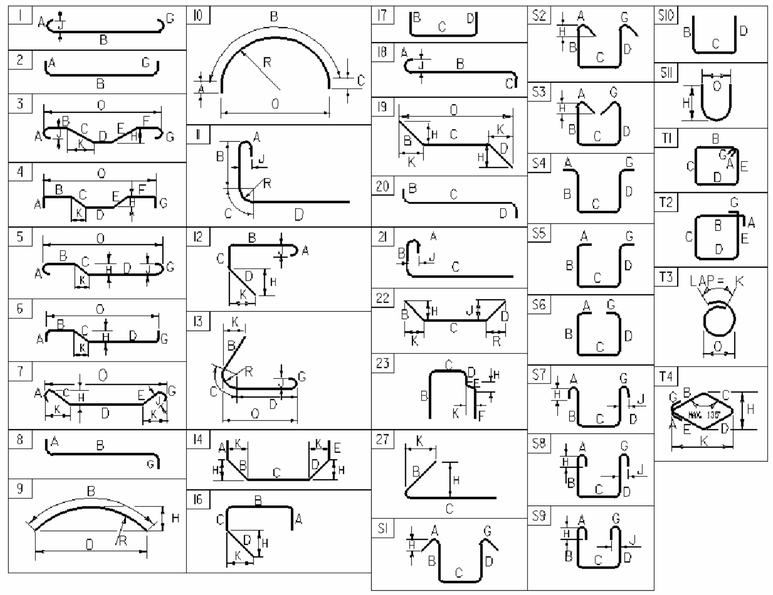

ASTM STANDARD REINFORCING BARS

BAR SIZE DESIGNATION	WEIGHT POUNDS PER FOOT	NOMINAL DIMENSIONS ROUND SECTION		
		DIAMETER INCHES	AREA INCHES ^{2}	PERIMETER INCHES
#3	0.376	0.375	0.11	1.178
#4	0.668	0.500	0.20	1.571
#5	1.043	0.625	0.31	1.963
#6	1.502	0.750	0.44	2.356
#7	2.044	0.875	0.60	2.749
#8	2.670	1.000	0.79	3.142
#9	3.400	1.128	1.00	3.544
#10	4.303	1.270	1.27	3.990
#11	5.313	1.410	1.56	4.430
#14	7.65	1.693	2.25	5.32
#18	13.60	2.257	4.00	7.09

REV.	BY	DATE	DESCRIPTION
③	CWC	5/22/08	REVISED WW 1& WW 2 ELEVATIONS
④	CWC	7/01/08	EXISTING BOTTOM OF FOOTING ELEV. REVISED

PROJECT NAME: **POWNAL**
PROJECT NUMBER: **BRZ 1441(19) C/2**

FILE NAME: **\PW\87e045\estimate\87e045rss**
PROJECT MANAGER: **R. WHITCOMB**
DESIGNED BY: **C. CARLSON**
REINFORCING STEEL SCHEDULE SHEET #1

PLOT DATE: **7/2/2008**
DRAWN BY: **D. PETERSON**
CHECKED BY: **D. PETERSON**
SHEET **66** OF **108**

SUBBASE TRANSITION BETWEEN STA 8 + 75 ~ STA 10 + 50

NTS

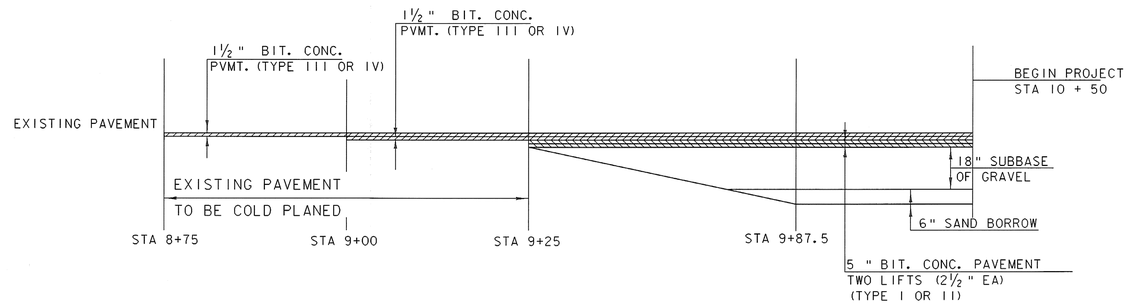

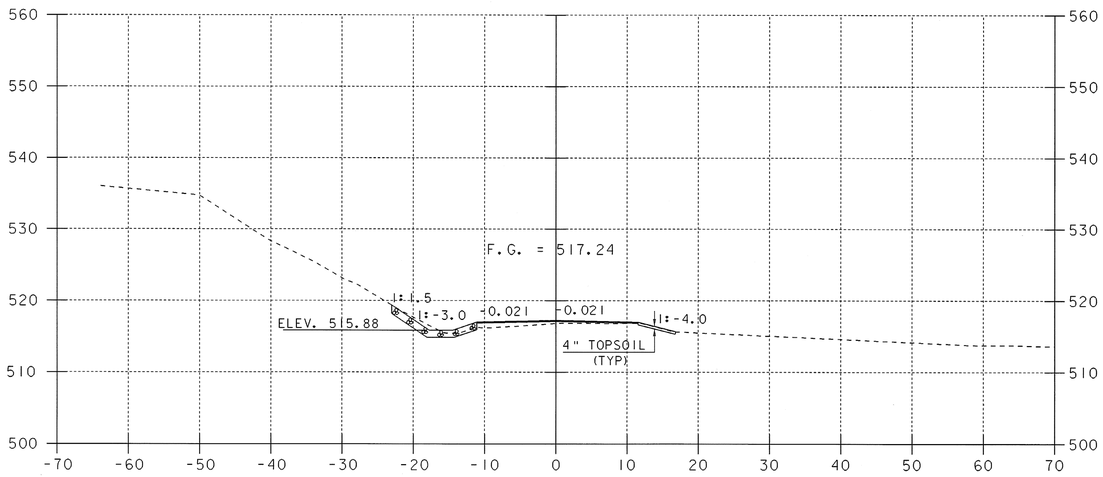

9+00

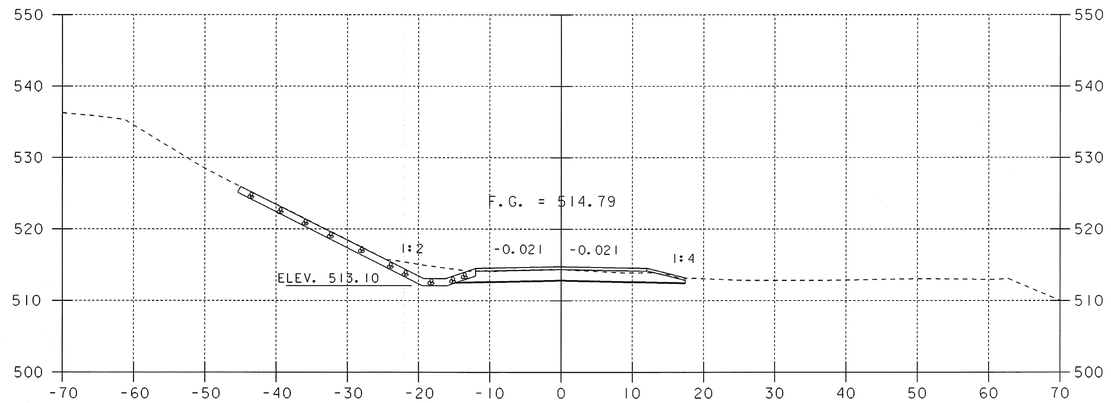

9+75

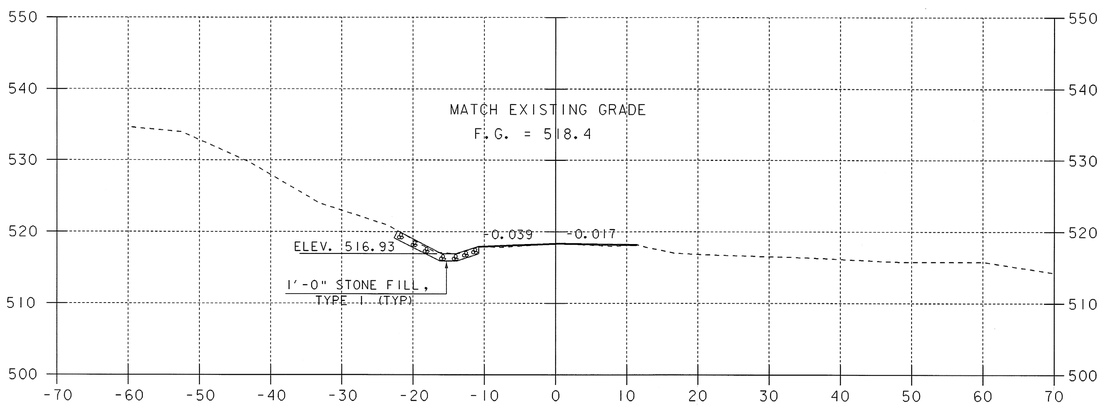

8+75
BEGIN APPROACH

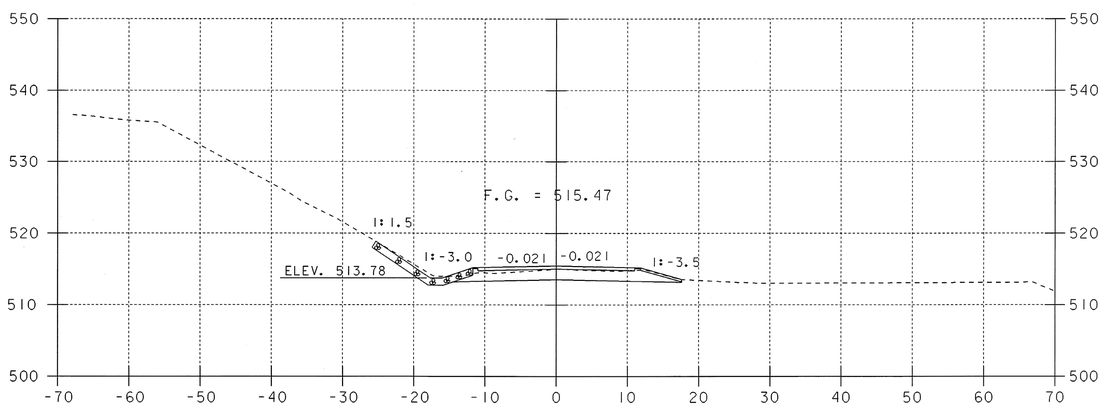

9+50

SCALE 1" = 10'-0
10 0 10

SHEET NAME:	MAINLINE CROSS SECTIONS		
PROJECT NAME:	POWNAL	HIGHWAY NO.:	TH 24
PROJECT NUMBER:	BRZ 1441(19) C/2	BRIDGE NO.:	41
		OVER:	HOOSIC RIVER
FILE NAME: 87e045/str/se045xs2.dgn		PLOT DATE:	08-FEB-2008
PROJECT MANAGER: R. WHITCOMB		DRAWN BY:	J.GILMORE
DESIGNED BY: C. CARLSON		IPARM NAME:	se045mxl.i
		SHEET 67 OF 108	

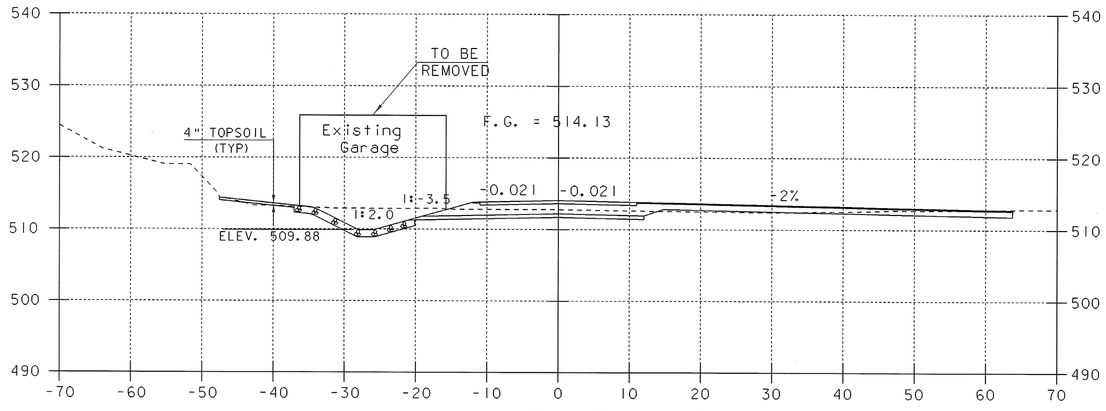

10+46

CONSTRUCT DRIVE RIGHT

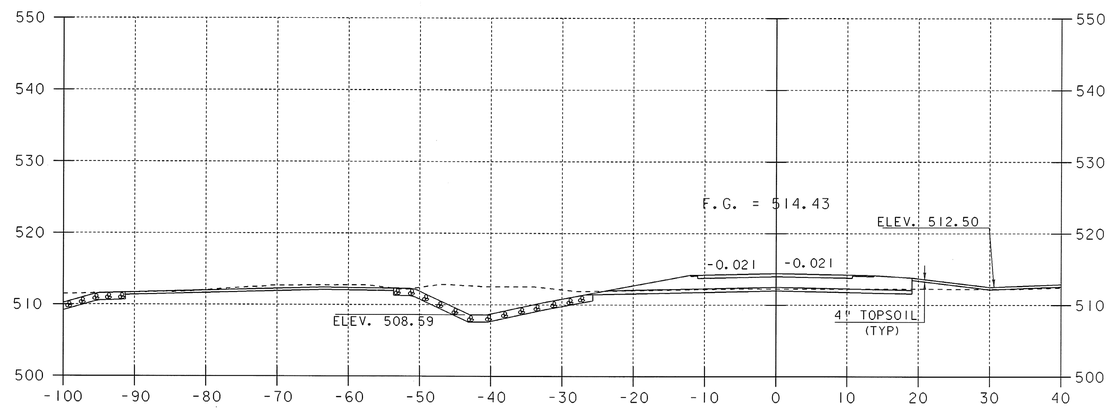

10+75

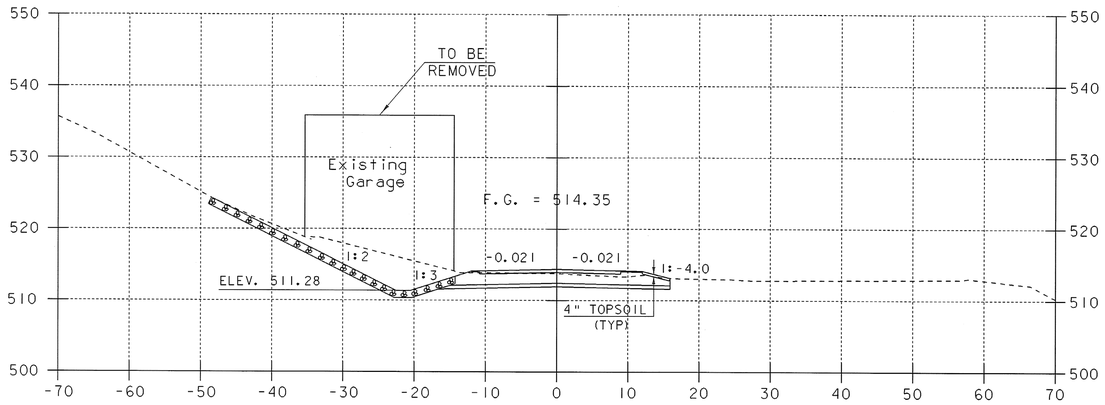

10+00

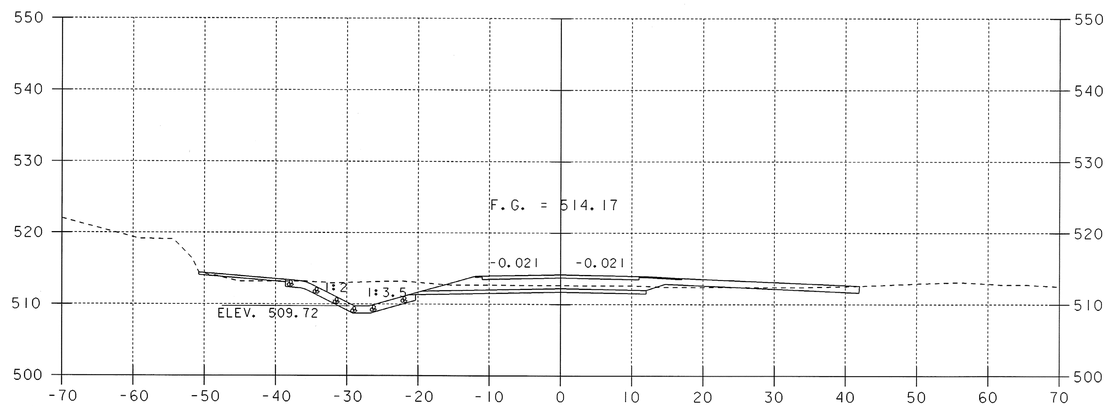

10+50

END APPROACH

BEGIN PROJECT

STA 10+50.8 RT
BEGIN SPECIAL DITCH

SCALE 1" = 10'-0

10 0 10

SHEET NAME:	MAINLINE CROSS SECTIONS		
PROJECT NAME:	POWNAL	HIGHWAY NO.:	TH 24
PROJECT NUMBER:	BRZ 1441(19) C/2	BRIDGE NO.:	41
		OVER:	HOOSIC RIVER
FILE NAME: 87e045/str/se045xs2.dgn		PLOT DATE:	08-FEB-2008
PROJECT MANAGER: R. WHITCOMB		DRAWN BY:	J.GILMORE
DESIGNED BY: C. CARLSON		IPARM NAME:	se045mx2.i
		SHEET 68 OF 108	

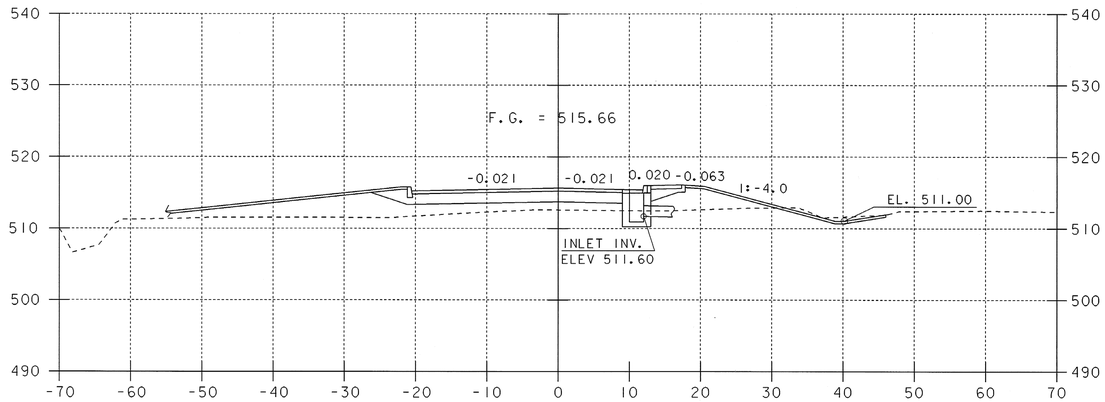

11+25

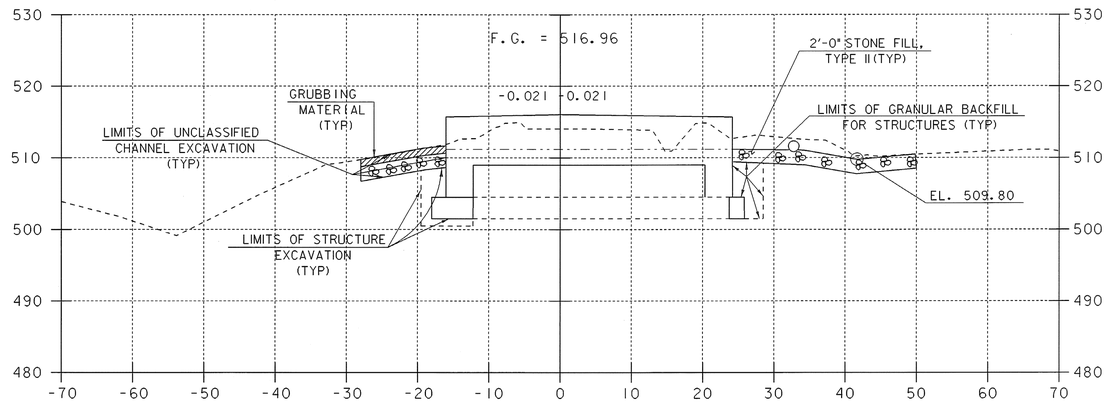

11+57.62 LT.
END CAST-IN-PLACE CONCRETE CURB, TYPE B

11+57.62
BEGIN BRIDGE

11+57.62 RT.
END CAST-IN-PLACE CONCRETE CURB, TYPE B
END PORTLAND CEMENT CONCRETE SIDEWALK, 5 INCH

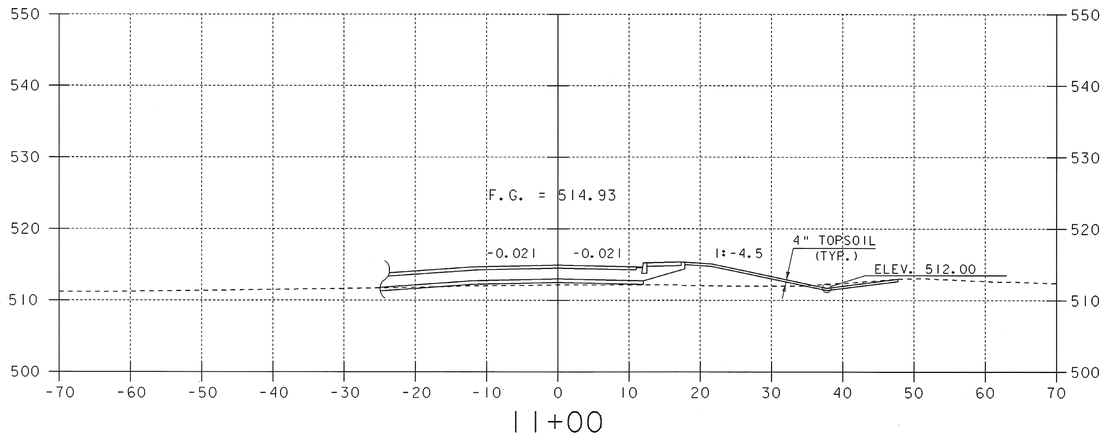

11+00

10+88.00 RT.
BEGIN CAST-IN-PLACE CONCRETE CURB, TYPE B
BEGIN PORTLAND CEMENT CONCRETE SIDEWALK, 5 INCH

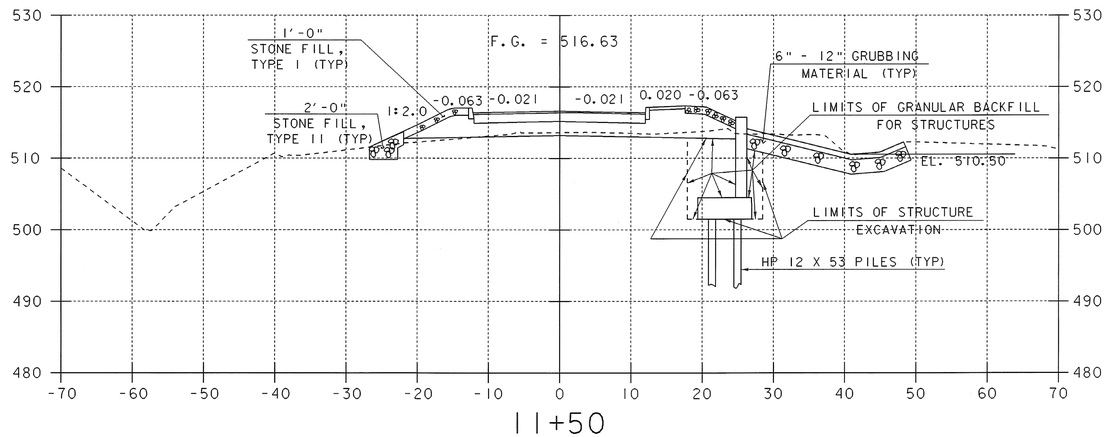

11+50

STA 11+50.0 RT
END SPECIAL DITCH

SCALE 1" = 10'-0
10 0 10

SHEET NAME:	MAINLINE CROSS SECTIONS		
PROJECT NAME:	POWNAL	HIGHWAY NO.:	TH 24
PROJECT NUMBER:	BRZ 1441(19) C/2	BRIDGE NO.:	41
		OVER:	HOOSIC RIVER
FILE NAME: 87e045/str/se045xs2.dgn		PLOT DATE:	08-FEB-2008
PROJECT MANAGER: R. WHITCOMB		DRAWN BY:	J.GILMORE
DESIGNED BY: C. CARLSON		IPARM NAME:	se045mx3.i
		SHEET 69 OF 108	

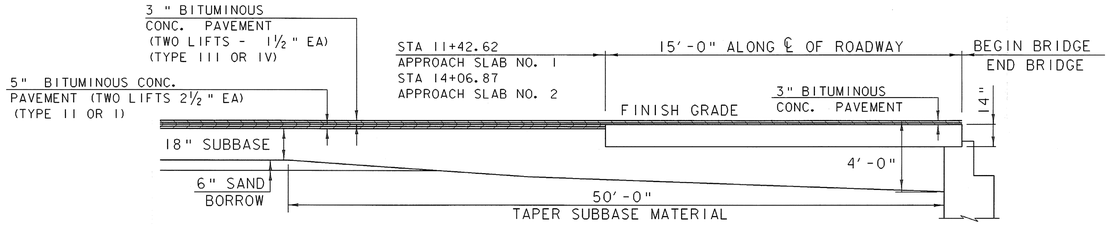

APPROACH SLAB DETAIL

NTS

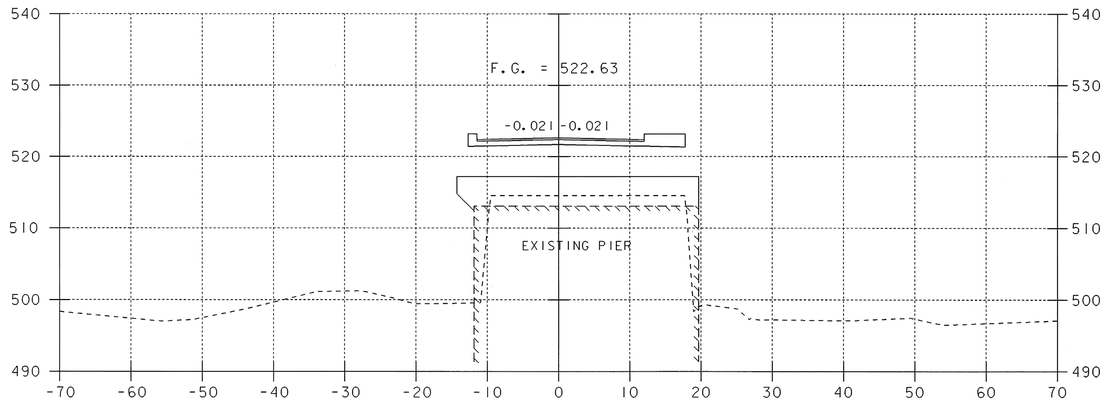

12+93.62
℄ OF PIER

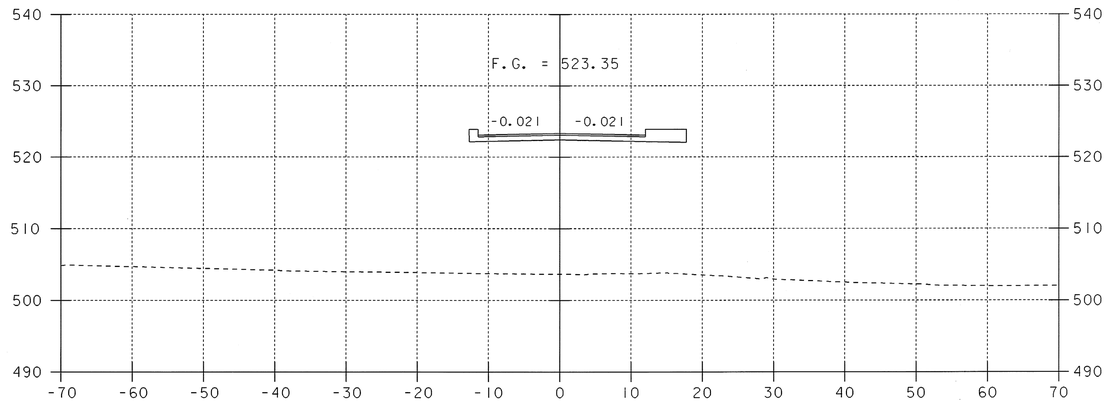

13+50

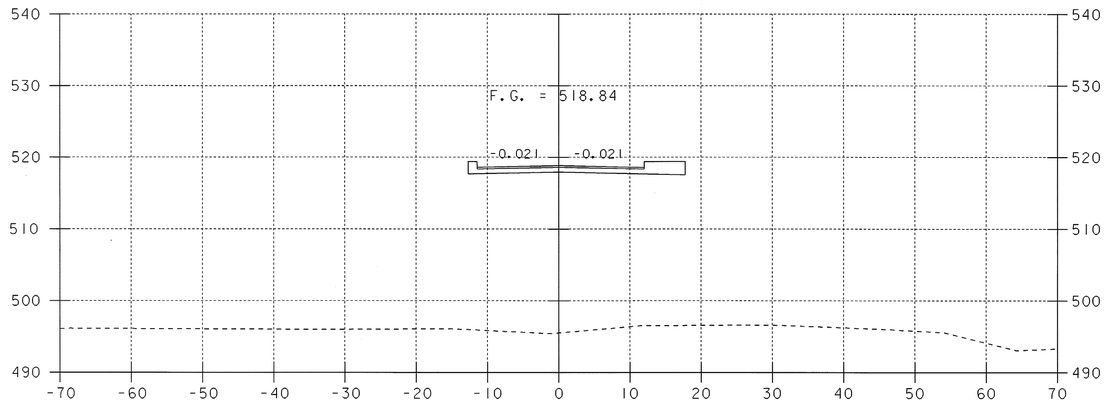

12+00

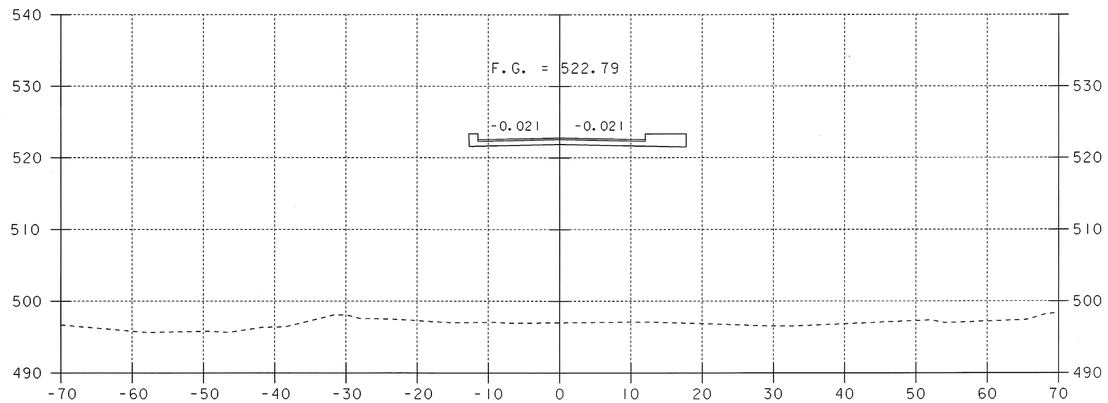

13+00

SCALE 1" = 10'-0

SHEET NAME:	MAINLINE CROSS SECTIONS		
PROJECT NAME:	POWNAL	HIGHWAY NO.:	TH 24
PROJECT NUMBER:	BRZ 1441(19) C/2	BRIDGE NO.:	41
		OVER:	HOOSIC RIVER
FILE NAME: 87e045/str/se045xs2.dgn		PLOT DATE:	08-FEB-2008
PROJECT MANAGER: R. WHITCOMB		DRAWN BY:	J.GILMORE
DESIGNED BY: C. CARLSON		IPARM NAME:	se045mx4.i
		SHEET 70 OF 108	

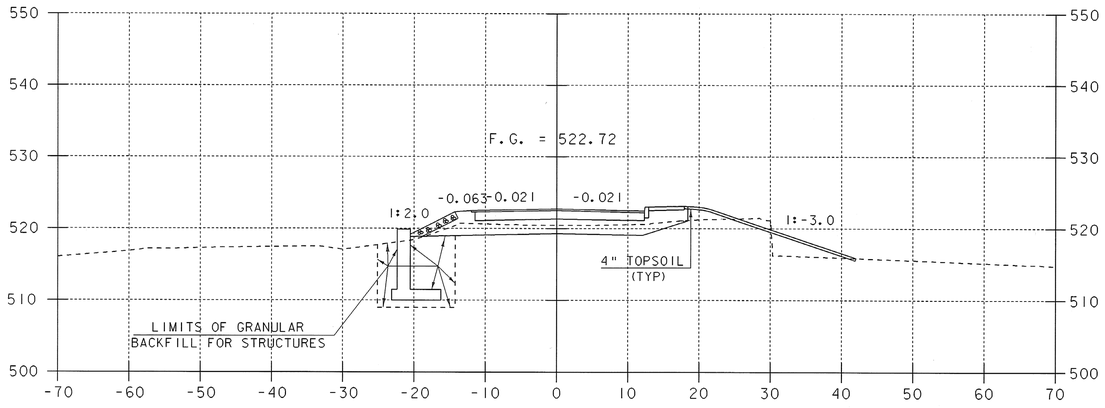

14+00

STA 14+01.22 LT.
END STRUCTURE EXCAVATION AND
GRANULAR BACKFILL FOR STRUCTURES

STA 13+99.57 RT.
END STRUCTURE EXCAVATION AND
GRANULAR BACKFILL FOR STRUCTURES

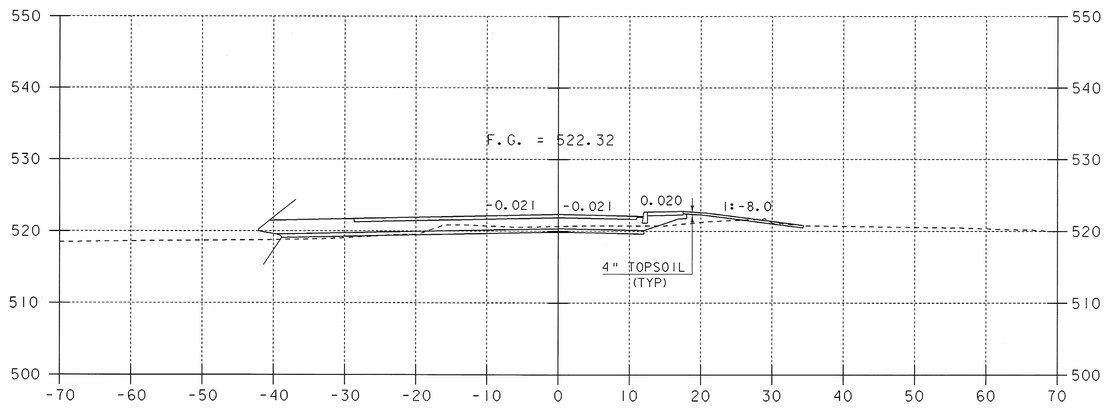

14+15

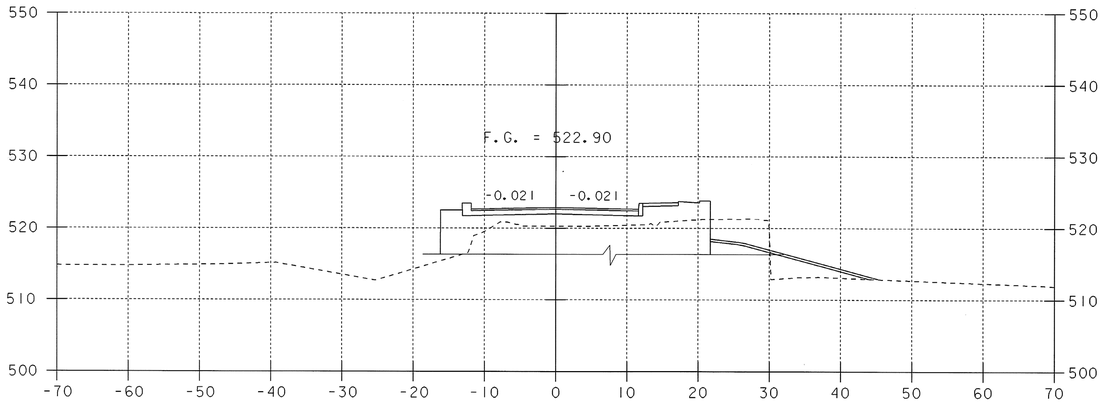

13+91.87
END BRIDGE

STA 13+87.34 LT.
BEGIN STRUCTURE EXCAVATION AND
GRANULAR BACKFILL FOR STRUCTURES

STA. 13+91.87 RT.
BEGIN CAST-IN-PLACE CONCRETE CURB, TYPE B
BEGIN PORTLAND CEMENT CONCRETE SIDEWALK, 5 INCH

STA 13+87.40 RT.
BEGIN STRUCTURE EXCAVATION AND
GRANULAR BACKFILL FOR STRUCTURES

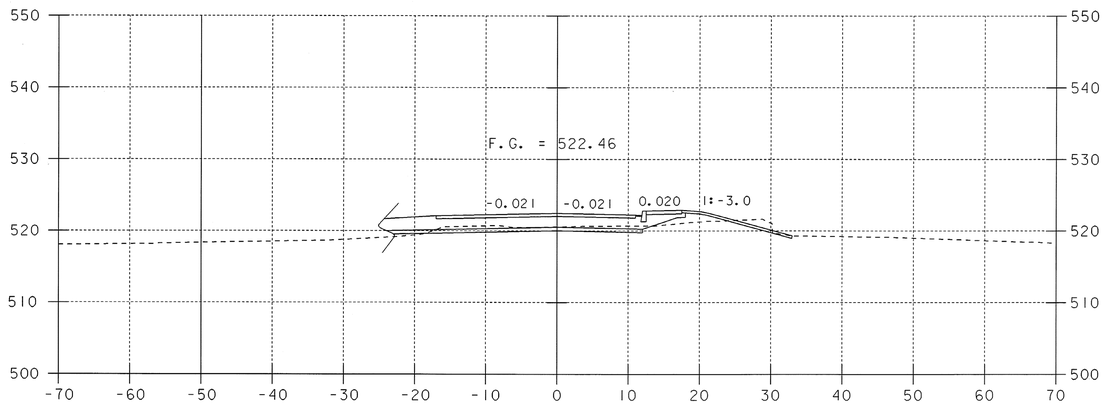

14+10

SCALE 1" = 10'-0
10 0 10

SHEET NAME:	MAINLINE CROSS SECTIONS		
PROJECT NAME:	POWNAL	HIGHWAY NO.:	TH 24
PROJECT NUMBER:	BRZ 1441(19) C/2	BRIDGE NO.:	41
		OVER:	HOOSIC RIVER
FILE NAME: 87e045/str/se045xs2.dgn		PLOT DATE:	08-FEB-2008
PROJECT MANAGER: R. WHITCOMB		DRAWN BY:	J.GILMORE
DESIGNED BY: C. CARLSON		IPARM NAME:	se045mx5.i
		SHEET 71 OF 108	

SEE SHEET 83 FOR
WWTF SIDELINE APPROACH NEAR
RR TRACKS

STA. 14+28.00 RT.
END PORTLAND CEMENT CONCRETE SIDEWALK, 5 INCH

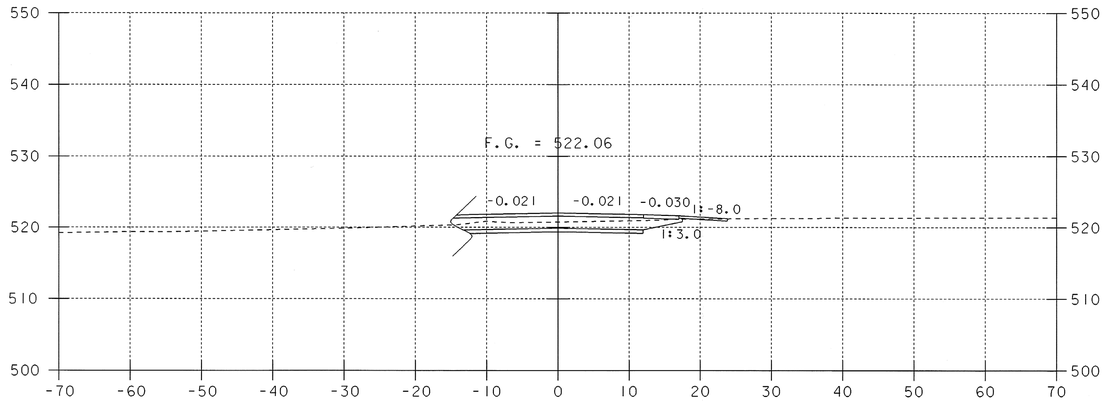

14+25

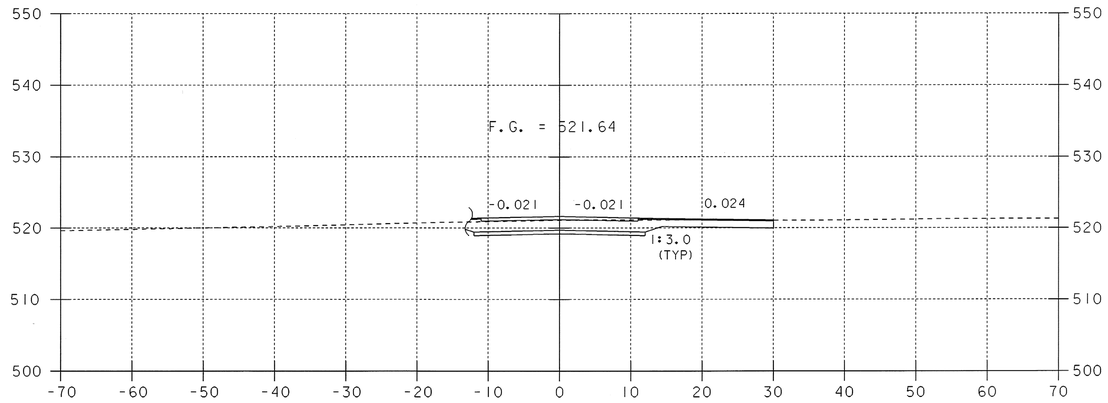

14+50

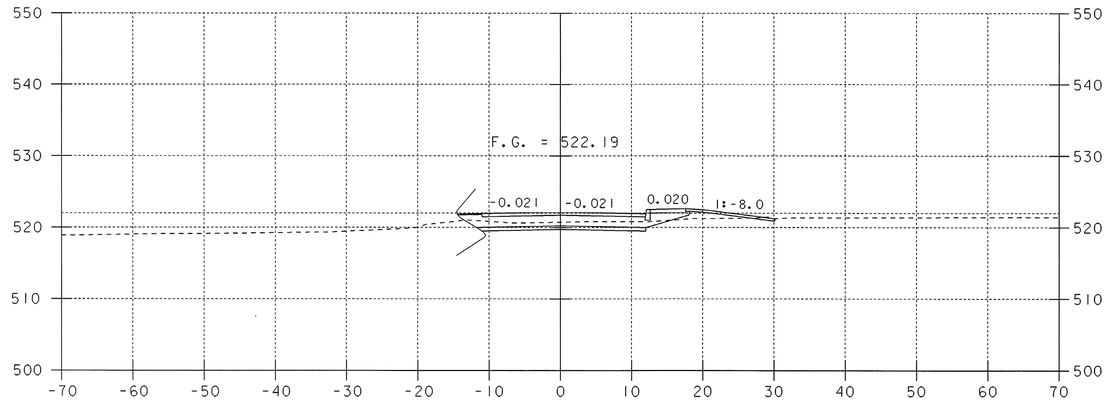

14+20

STA. 14+20.00 RT.
END CAST-IN-PLACE CONCRETE CURB, TYPE B

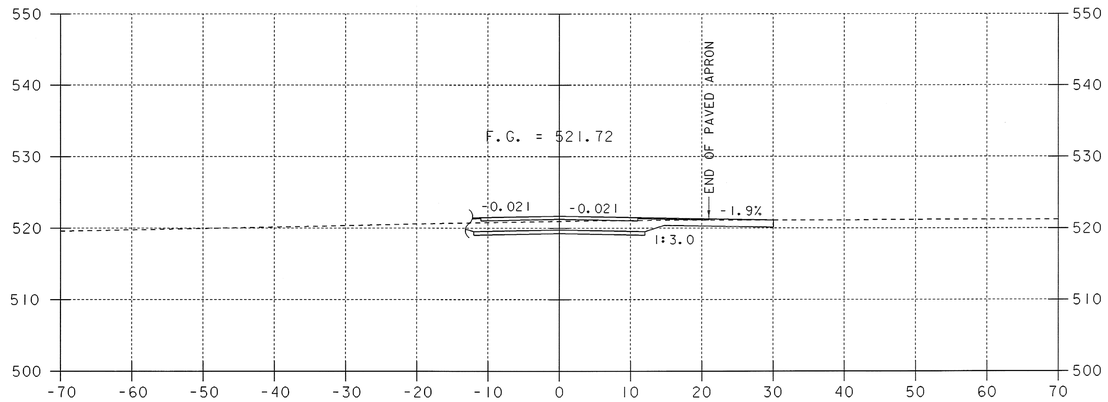

14+39
DRIVE RIGHT

SCALE 1" = 10'-0
10 0 10

SHEET NAME:	MAINLINE CROSS SECTIONS		
PROJECT NAME:	POWNAL	HIGHWAY NO.:	TH 24
PROJECT NUMBER:	BRZ 1441(19) C/2	BRIDGE NO.:	41
		OVER:	HOOSIC RIVER
FILE NAME: 87e045/str/se045xs2.dgn		PLOT DATE:	08-FEB-2008
PROJECT MANAGER: R. WHITCOMB		DRAWN BY:	J.GILMORE
DESIGNED BY: C. CARLSON		IPARM NAME:	se045mx6.i
		SHEET 72 OF 108	

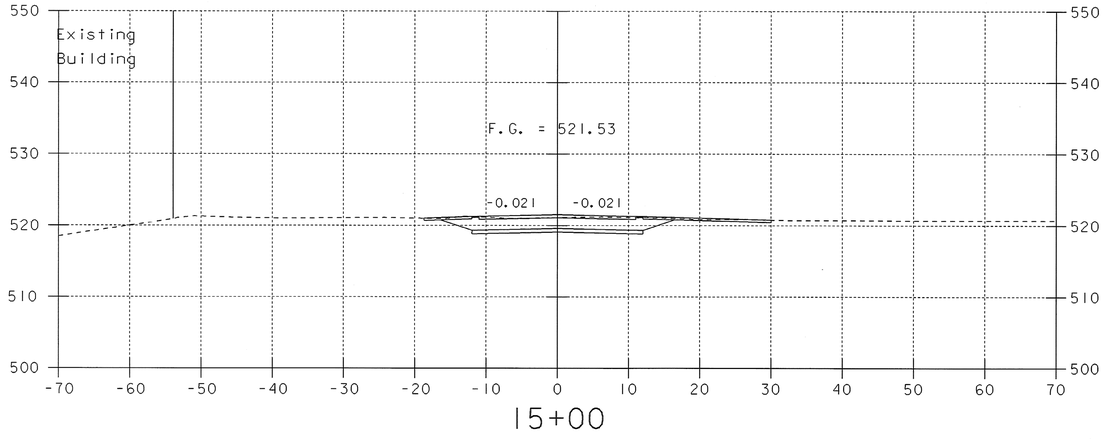

15+00

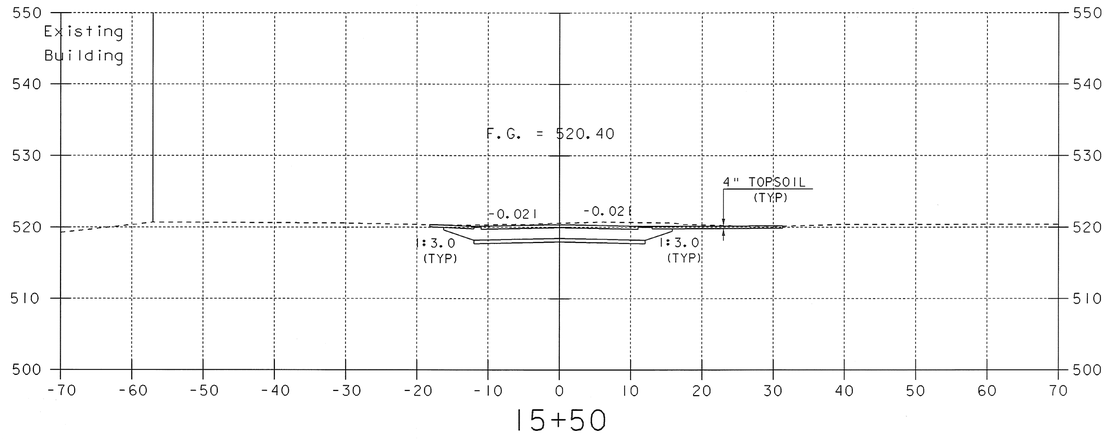

15+50

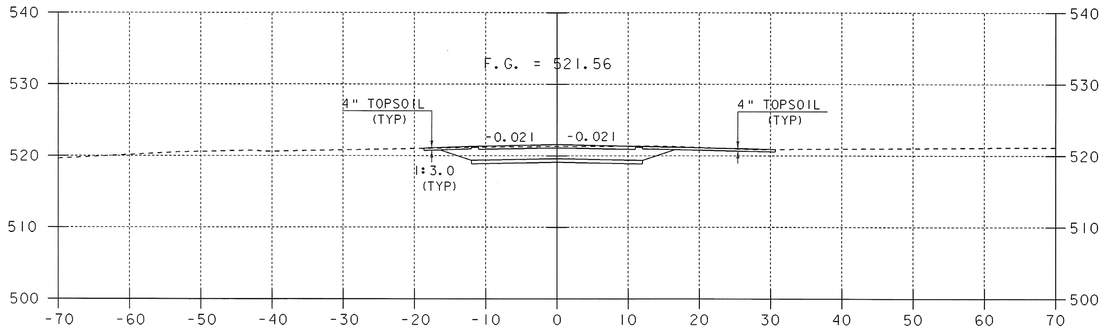

14+75

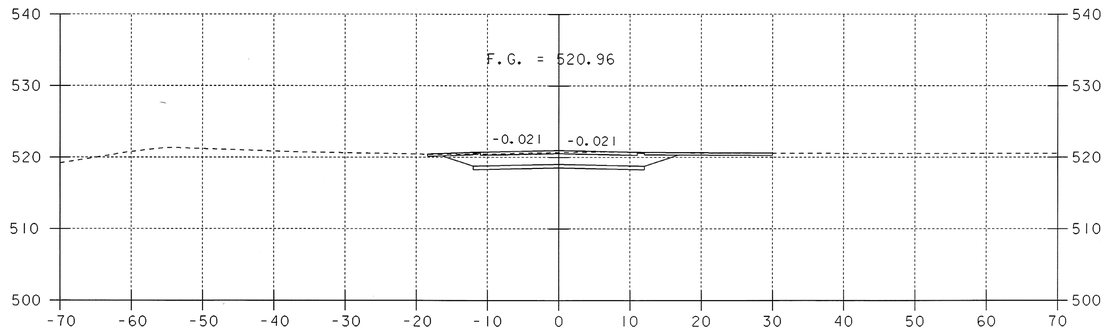

15+25

SCALE 1" = 10'-0

10 0 10

SHEET NAME:	MAINLINE CROSS SECTIONS		
PROJECT NAME:	POWNAL	HIGHWAY NO.:	TH 24
PROJECT NUMBER:	BRZ 1441(19) C/2	BRIDGE NO.:	41
		OVER:	HOOSIC RIVER
FILE NAME: 87e045/str/se045xs2.dgn		PLOT DATE:	08-FEB-2008
PROJECT MANAGER: R. WHITCOMB		DRAWN BY:	J.GILMORE
DESIGNED BY: C. CARLSON		IPARM NAME:	se045mx7.i
		SHEET	73 OF 108

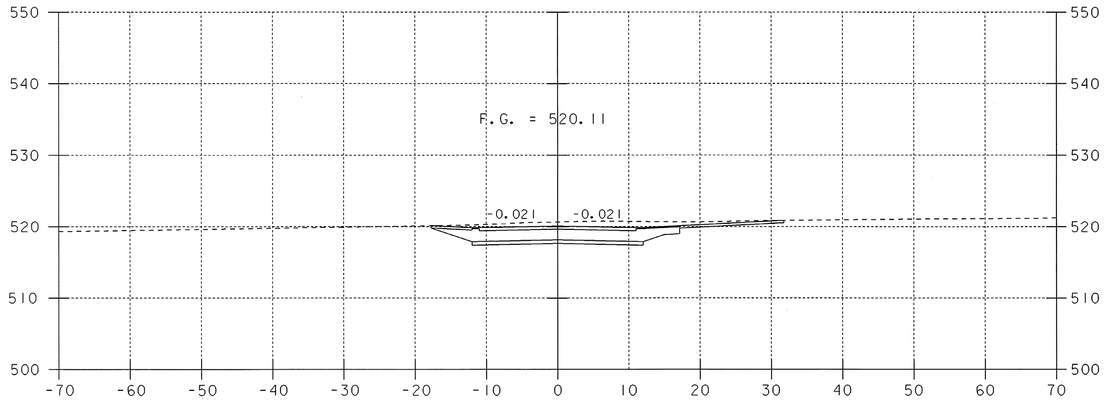

16+00

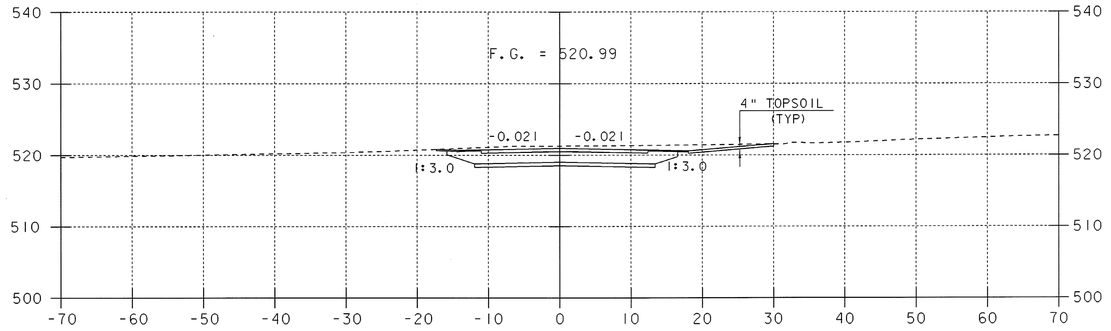

16+50

STA 15+78
CONSTRUCT DRIVE RT

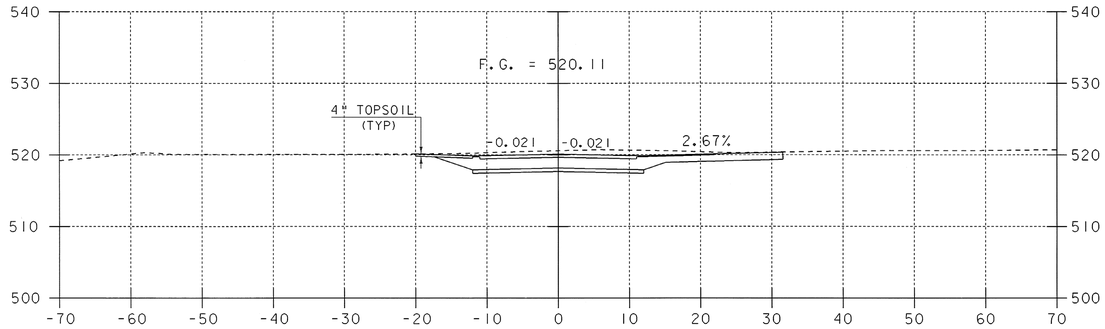

15+75

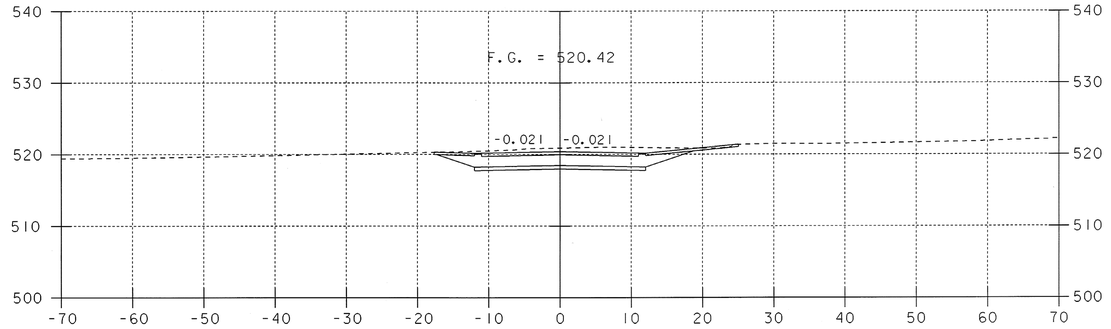

16+25

SCALE 1" = 10'-0
10 0 10

SHEET NAME:	MAINLINE CROSS SECTIONS		
PROJECT NAME:	POWNAL	HIGHWAY NO.:	TH 24
PROJECT NUMBER:	BRZ 1441(19) C/2	BRIDGE NO.:	41
		OVER:	HOOSIC RIVER
FILE NAME: 87e045/str/se045xs2.dgn		PLOT DATE:	08-FEB-2008
PROJECT MANAGER: R. WHITCOMB		DRAWN BY:	J.GILMORE
DESIGNED BY: C. CARLSON		IPARM NAME:	se045mx8.i
		SHEET 74 OF 108	

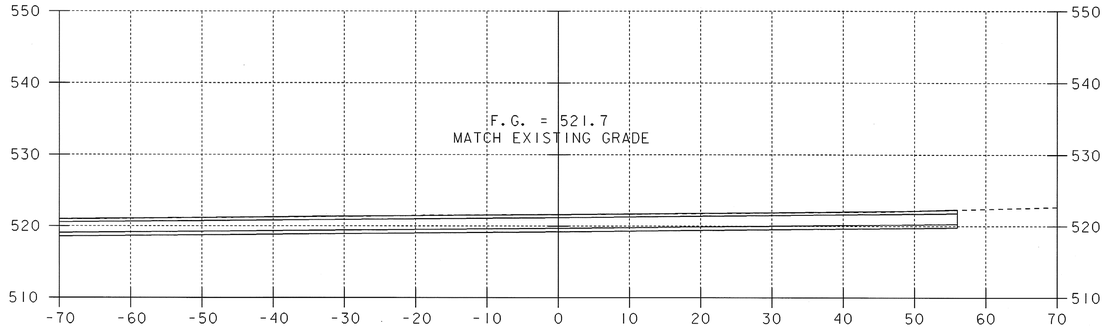

16+77
SKEW 6.636°
END PROJECT

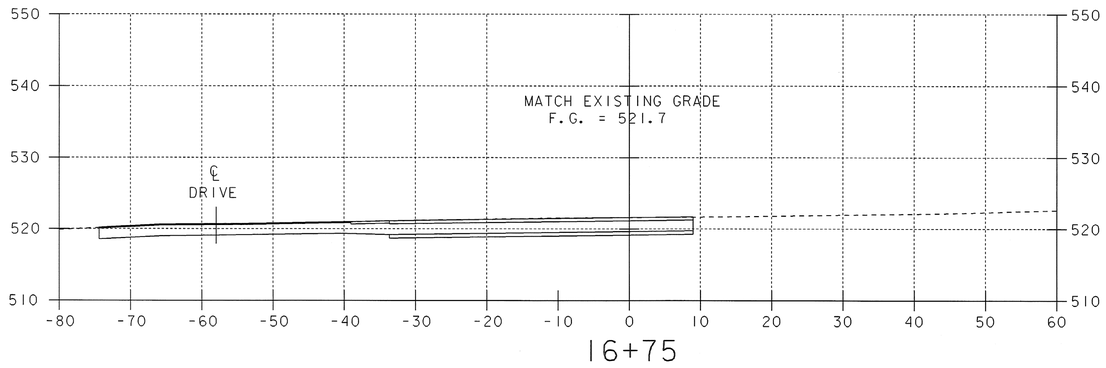

16+75

SCALE 1" = 10'-0
10 0 10

SHEET NAME:	MAINLINE CROSS SECTIONS		
PROJECT NAME:	POWNAL	HIGHWAY NO.:	TH 24
		BRIDGE NO.:	41
PROJECT NUMBER:	BRZ 1441(19) C/2	OVER:	HOOSIC RIVER
FILE NAME: 87e045/str/se045xs2.dgn		PLOT DATE:	08-FEB-2008
PROJECT MANAGER: R. WHITCOMB		DRAWN BY:	J.GILMORE
DESIGNED BY:	C. CARLSON	IPARM NAME:	se045mx9.i
		SHEET	75 OF 108

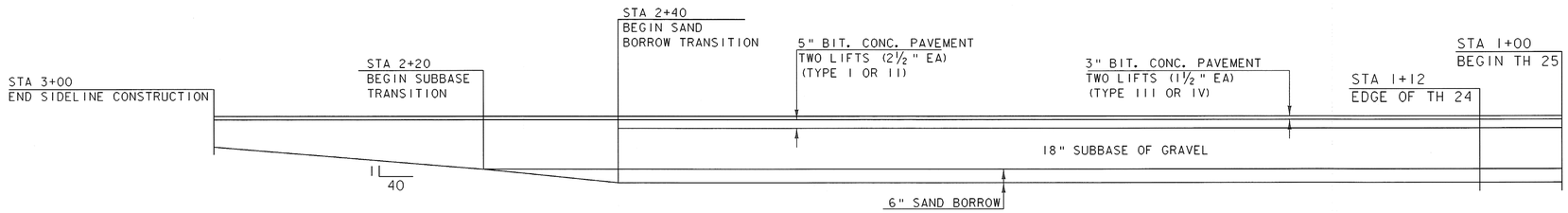

MATERIALS TRANSITION TH 25

NTS

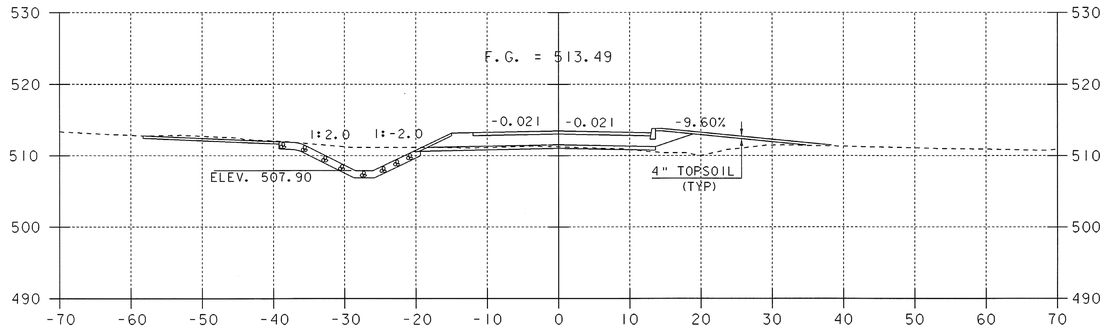

1+50

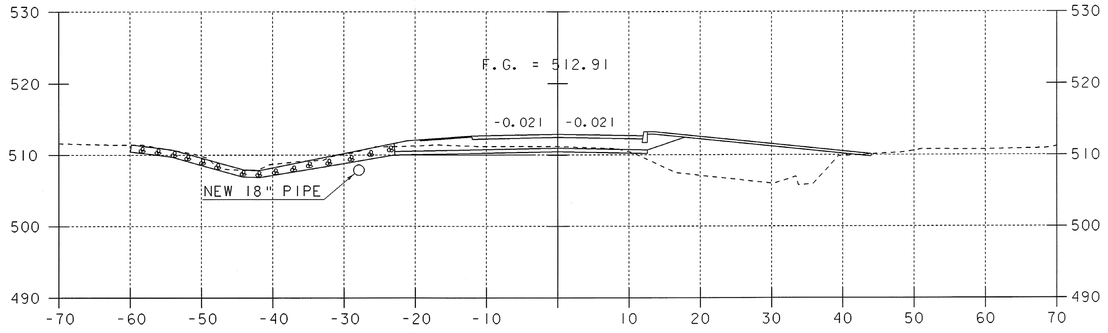

1+75

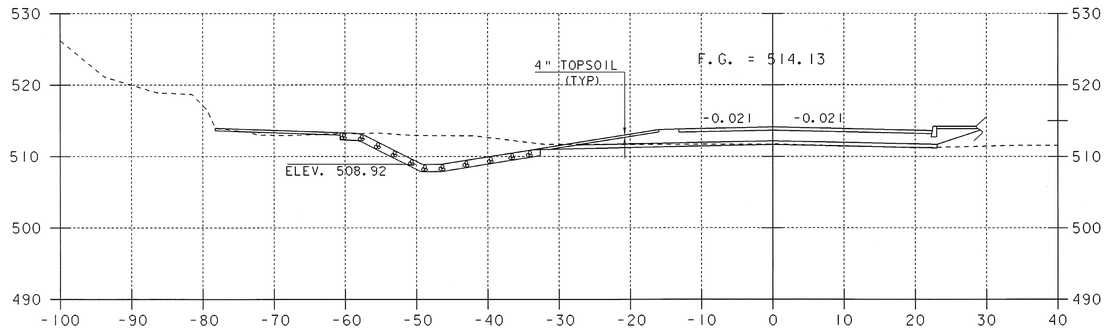

1+25

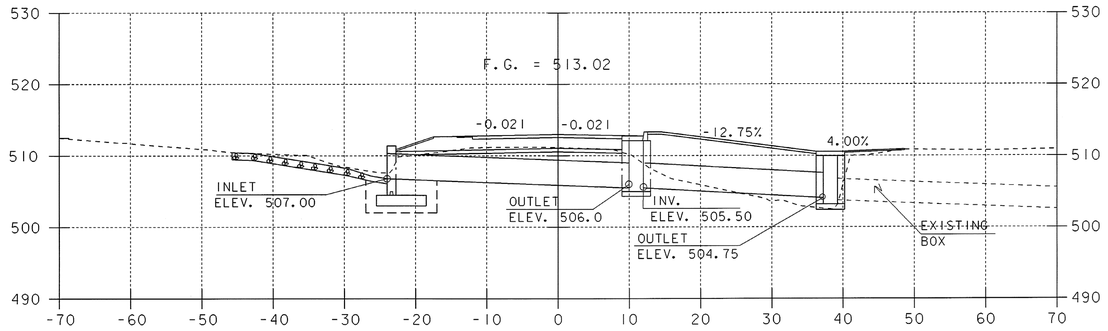

PIPE AT 1+68
SKEW = 88° RT

STA 1+12
BEGIN TH 25
SIDELINE
CONSTRUCTION

SCALE 1" = 10'-0
10 0 10

SNAKE HILL ROAD

SHEET NAME:	TOWN HIGHWAY 25 CROSS SECTIONS		
PROJECT NAME:	POWNAL	HIGHWAY NO.:	TH 24
PROJECT NUMBER:	BRZ 1441(19) C/2	BRIDGE NO.:	41
		OVER:	HOOSIC RIVER
FILE NAME: 87e045/str/se045xs2.dgn		PLOT DATE:	08-FEB-2008
PROJECT MANAGER: R. WHITCOMB		DRAWN BY:	J.GILMORE
DESIGNED BY: C. CARLSON		IPARM NAME:	se045sx1.i
		SHEET 76 OF 108	

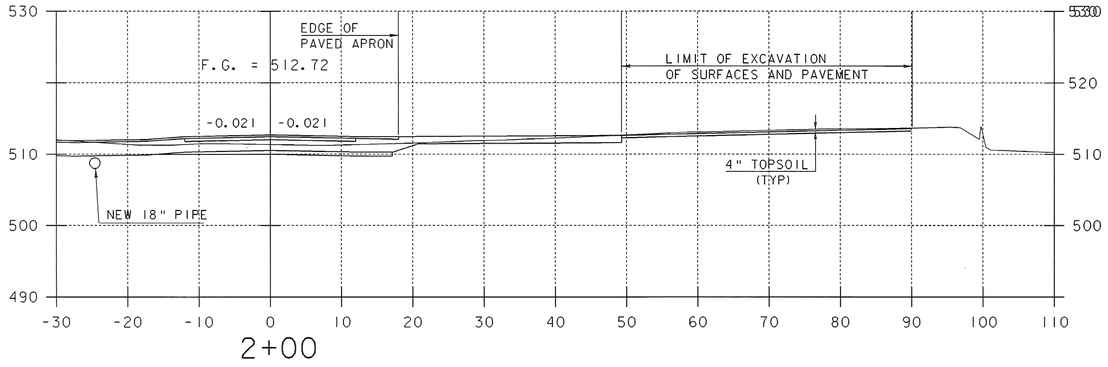

2+00

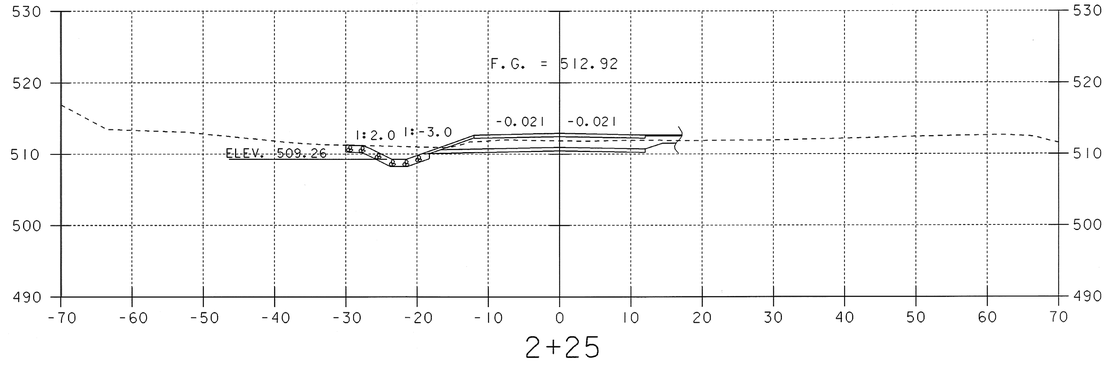

2+25

F.G. = 512.72

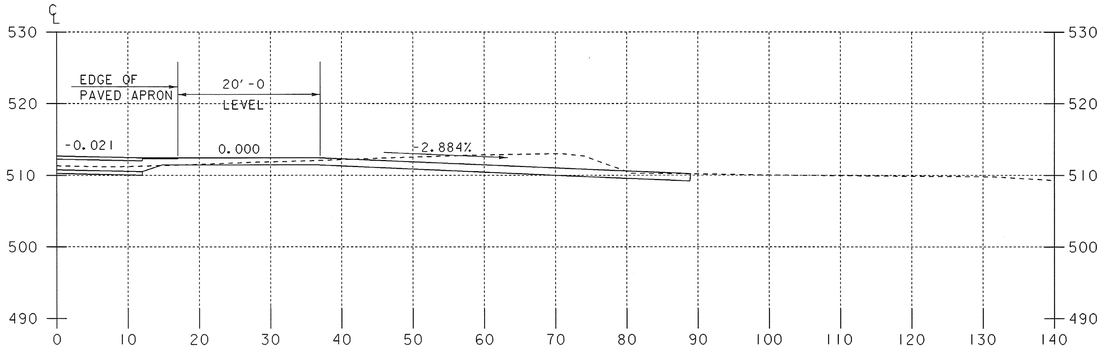

2+00

PROFILE ALONG DRIVE #1 RIGHT

F.G. = 512.92

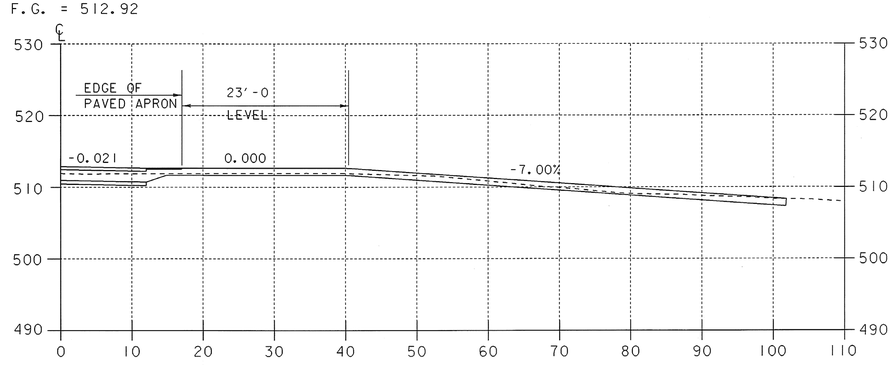

2+25

PROFILE ALONG DRIVE #2 RIGHT

TH 25 STA 1+85.14 =
TH 26 7+00.00
SEE SHEETS 79-82

SCALE 1" = 10'-0
10 0 10

SNAKE HILL ROAD

SHEET NAME:	TOWN HIGHWAY 25 CROSS SECTIONS		
PROJECT NAME:	POWNAL	HIGHWAY NO.:	TH 24
PROJECT NUMBER:	BRZ 1441(19) C/2	BRIDGE NO.:	41
		OVER:	HOOSIC RIVER
FILE NAME: 87e045/str/se045xs2.dgn		PLOT DATE:	08-FEB-2008
PROJECT MANAGER: R. WHITCOMB		DRAWN BY:	J.GILMORE
DESIGNED BY:	C. CARLSON	IPARM NAME:	se045sx2.i
		SHEET 77 OF 108	

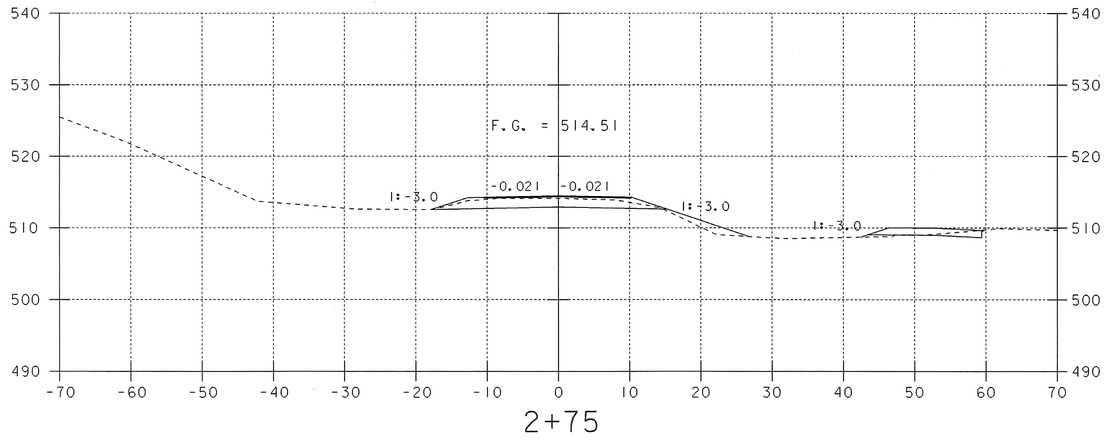

2+75

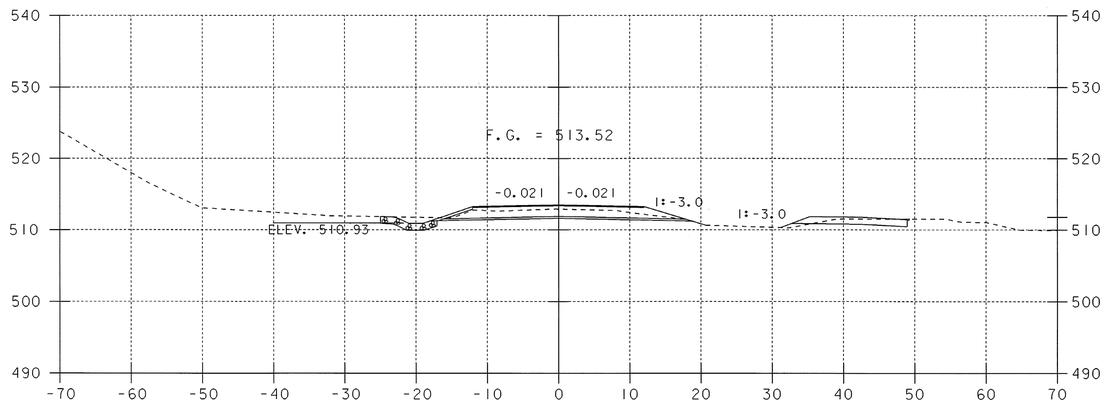

2+50

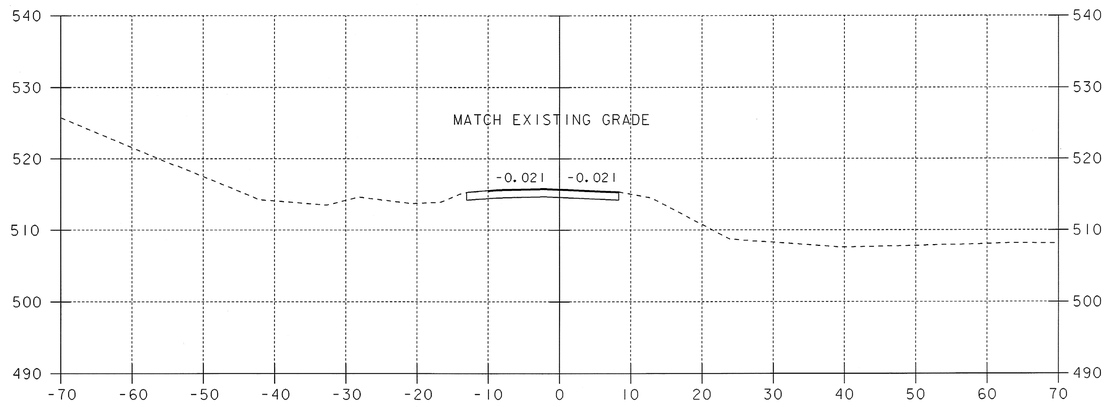

3+00

END TH 25

SIDELINE

CONSTRUCTION

SCALE 1" = 10'-0

10 0 10

SNAKE HILL ROAD

SHEET NAME:	TOWN HIGHWAY 25 CROSS SECTIONS		
PROJECT NAME:	POWNAL	HIGHWAY NO.:	TH 24
PROJECT NUMBER:	BRZ 1441(19) C/2	BRIDGE NO.:	41
		OVER:	HOOSIC RIVER
FILE NAME: 87e045/str/se045xs2.dgn		PLOT DATE:	08-FEB-2008
PROJECT MANAGER: R. WHITCOMB		DRAWN BY:	J.GILMORE
DESIGNED BY:	C. CARLSON	IPARM NAME:	se045sx3.i
		SHEET	78 OF 108

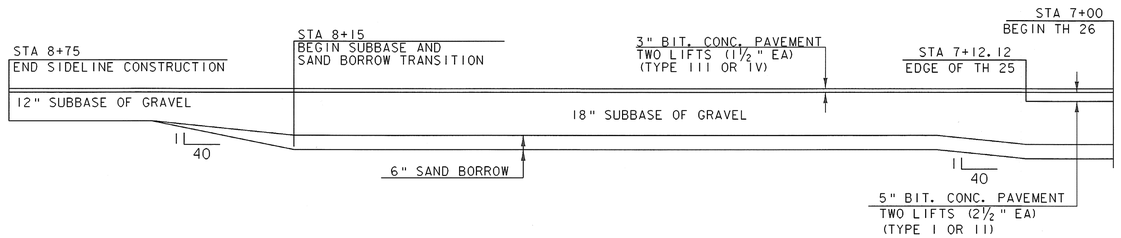

MATERIALS TRANSITION

NTS

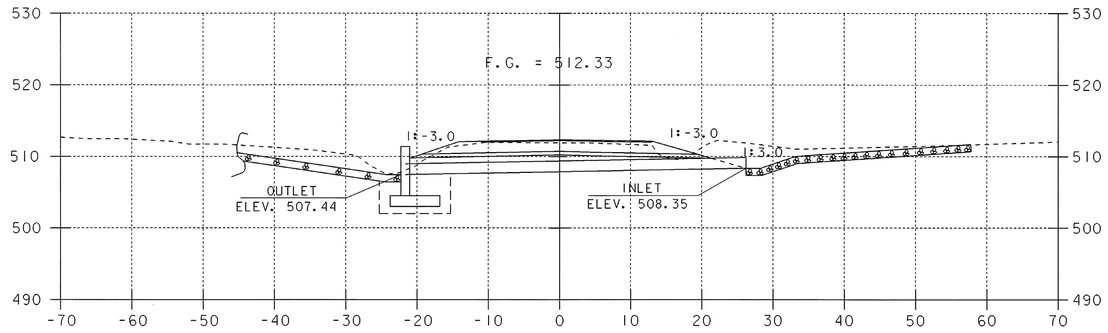

7+26

SKEWED SECTION OF
℄ OF 18" PIPE

STA 7+19.0 LT
BEGIN STONE LINED DITCH WITH
STONE FILL, TYPE I

STA 7+23.2 RT
BEGIN STONE LINED DITCH WITH
STONE FILL, TYPE I

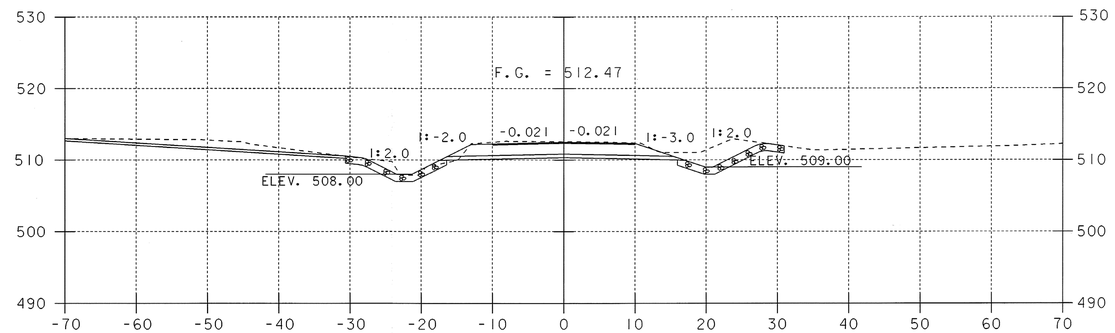

7+40

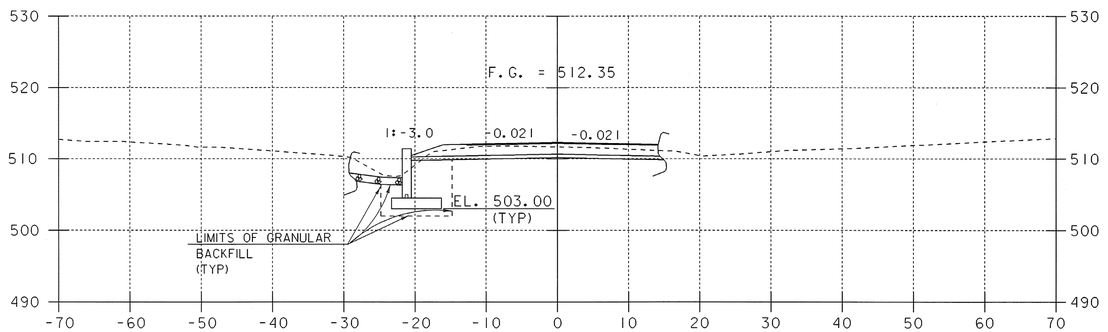

7+20

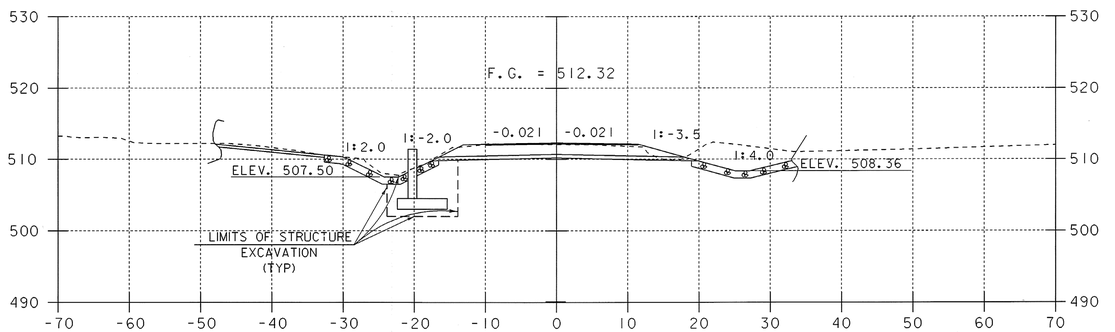

7+30

STA 7+12.12
BEGIN TH 26
SIDELINE
CONSTRUCTION

SCALE 1" = 10'-0
10 0 10

FURLONG ROAD

SHEET NAME:	TOWN HIGHWAY 26 CROSS SECTIONS		
PROJECT NAME:	POWNAL	HIGHWAY NO.:	TH 24
PROJECT NUMBER:	BRZ 1441(19) C/2	BRIDGE NO.:	41
		OVER:	HOOSIC RIVER
FILE NAME: 87e045/str/se045xs2.dgn		PLOT DATE:	08-FEB-2008
PROJECT MANAGER: R. WHITCOMB		DRAWN BY:	J.GILMORE
DESIGNED BY: C. CARLSON		IPARM NAME:	se045sx4.i
		SHEET	79 OF 108

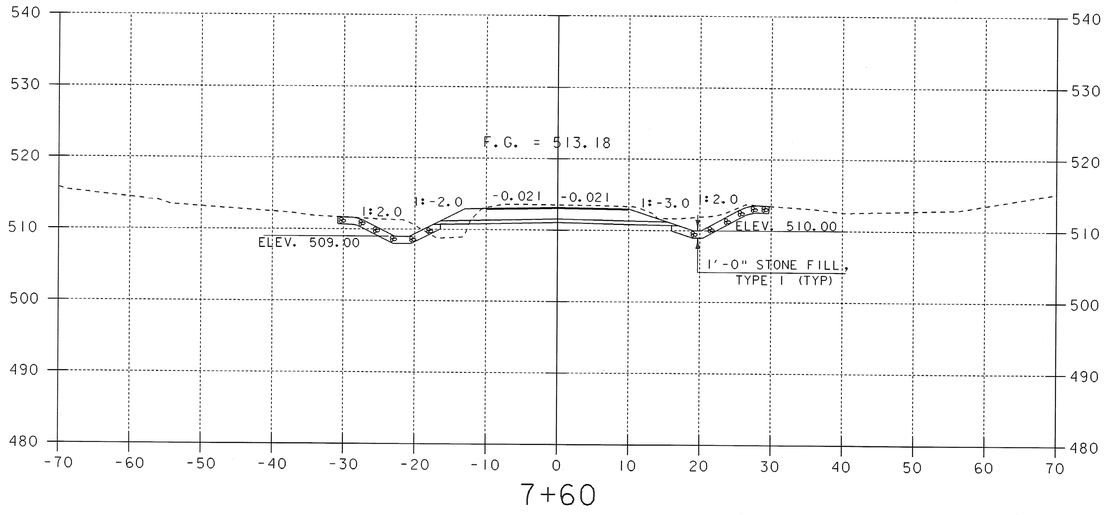

7+60

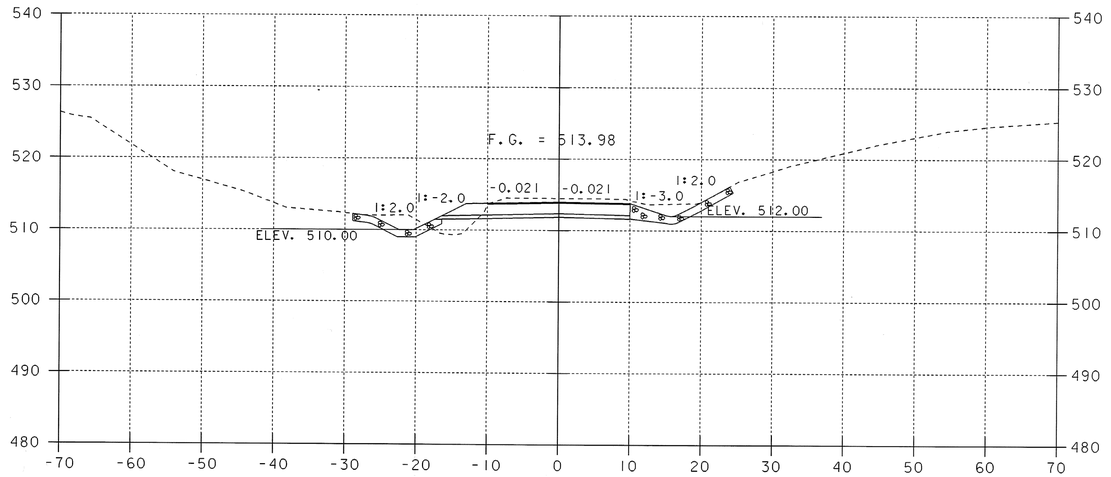

7+80

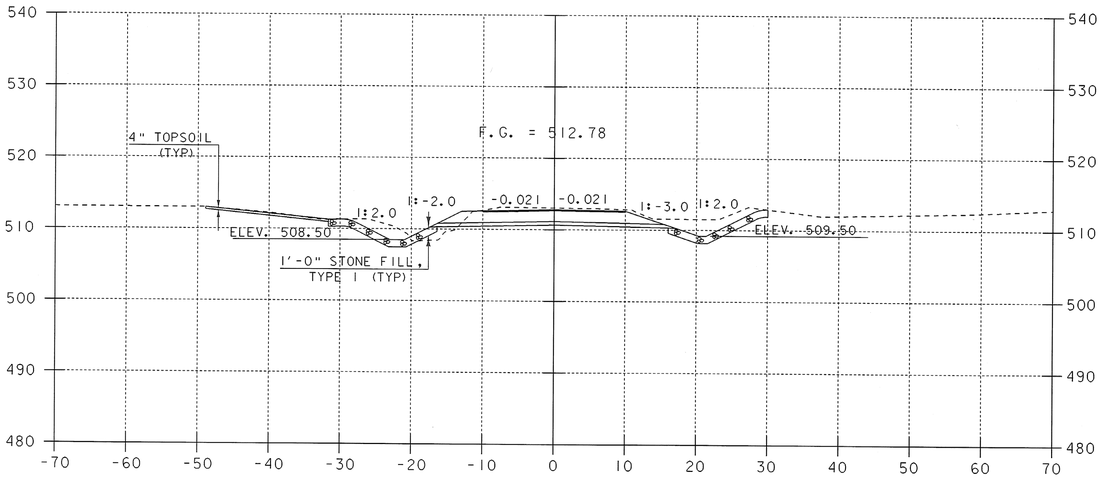

7+50

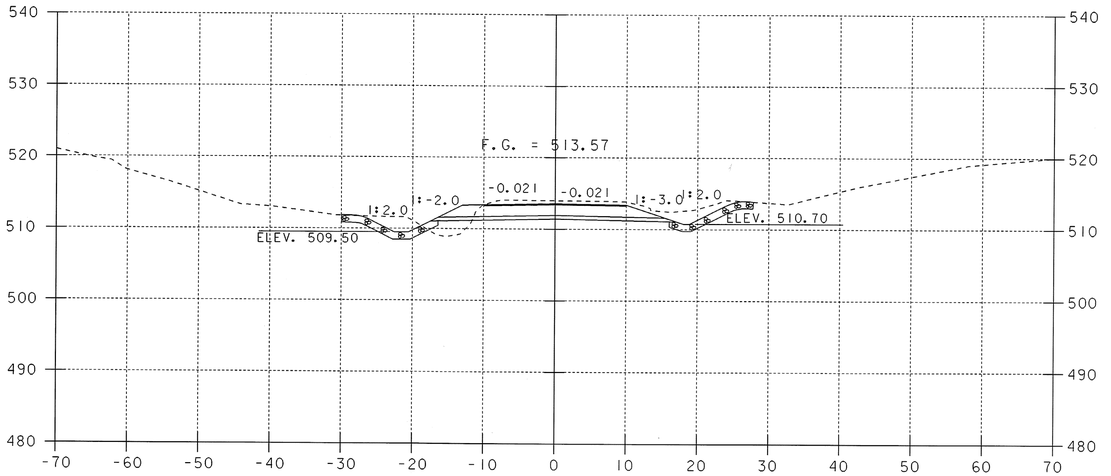

7+70

SCALE 1" = 10'-0

10 0 10

FURLONG ROAD

SHEET NAME:	TOWN HIGHWAY 26 CROSS SECTIONS		
PROJECT NAME:	POWNAL	HIGHWAY NO.:	TH 24
PROJECT NUMBER:	BRZ 1441(19) C/2	BRIDGE NO.:	41
		OVER:	HOOSIC RIVER
FILE NAME: 87e045/str/se045xs2.dgn		PLOT DATE:	08-FEB-2008
PROJECT MANAGER: R. WHITCOMB		DRAWN BY:	J.GILMORE
DESIGNED BY: C. CARLSON		IPARM NAME:	se045sx5.i
		SHEET 80 OF 108	

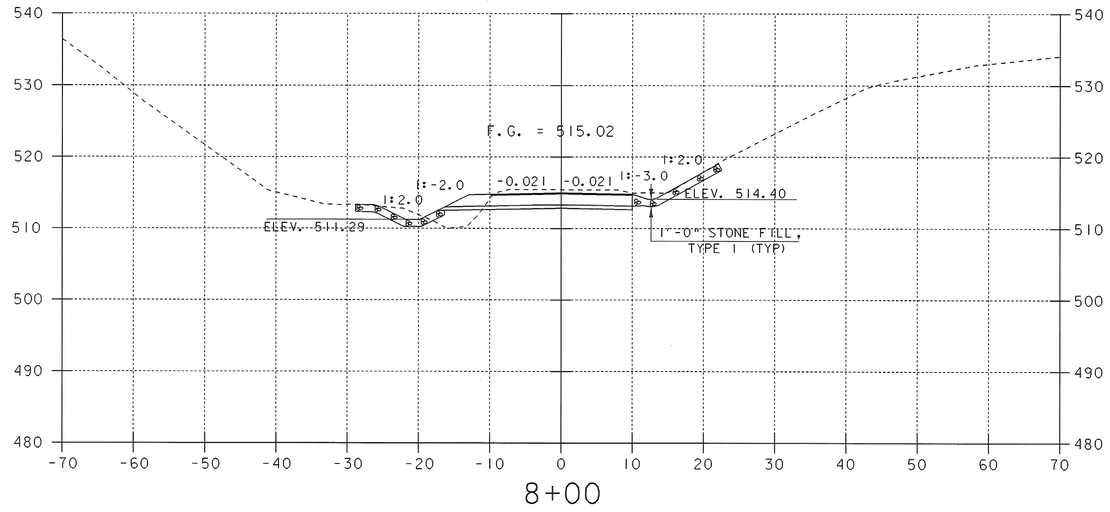

8+00

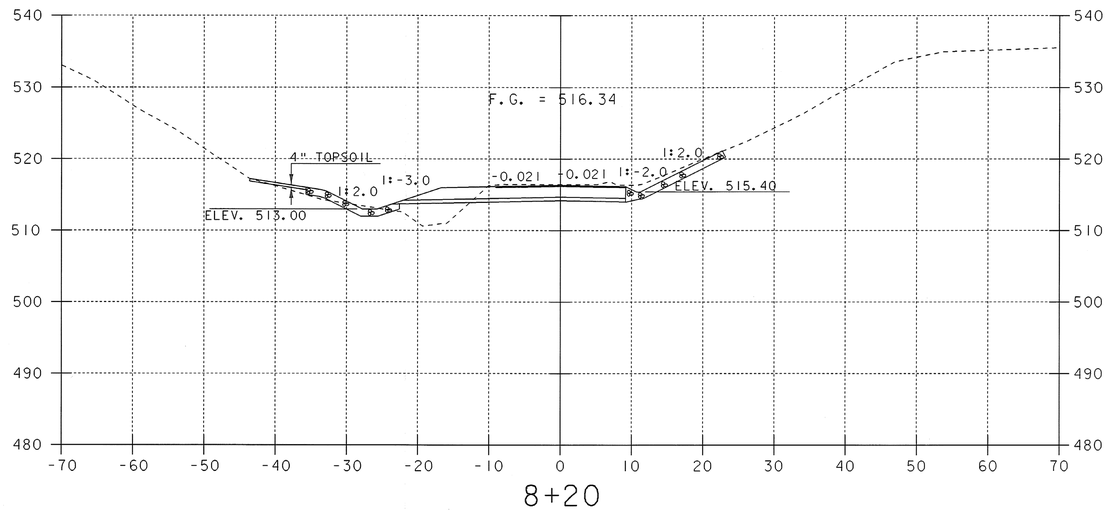

8+20

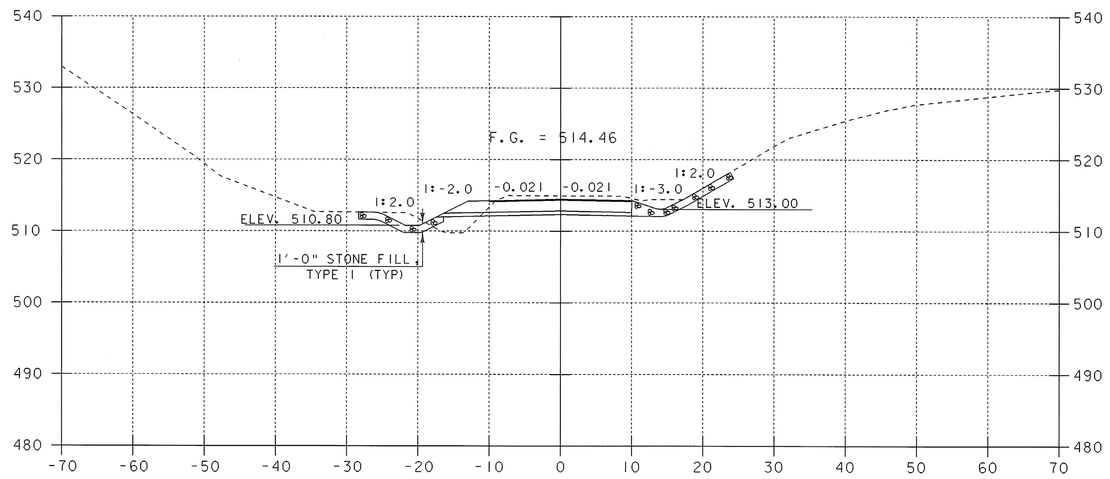

7+90

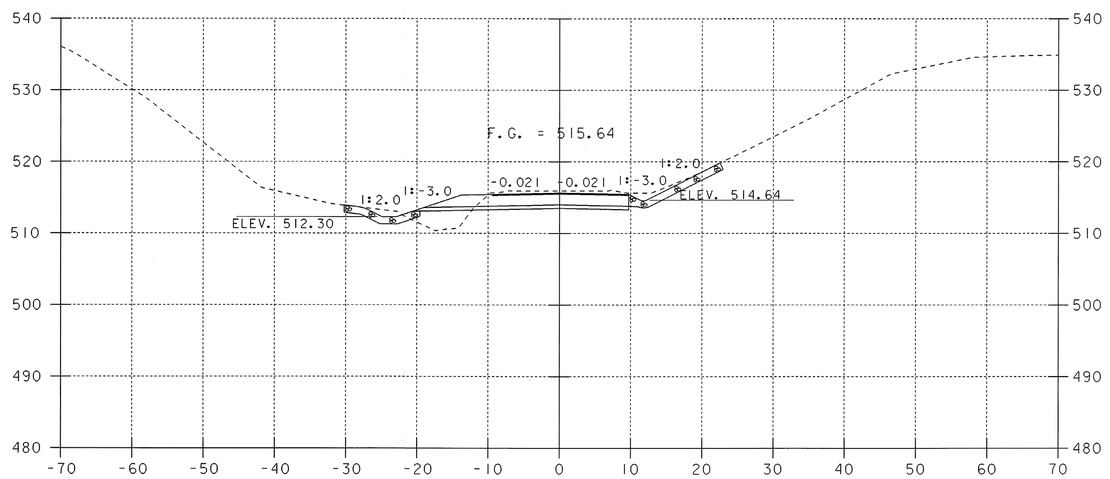

8+10

SCALE 1" = 10'-0

10 0 10

FURLONG ROAD

SHEET NAME:	TOWN HIGHWAY 26 CROSS SECTIONS		
PROJECT NAME:	POWNAL	HIGHWAY NO.:	TH 24
PROJECT NUMBER:	BRZ 1441(19) C/2	BRIDGE NO.:	41
		OVER:	HOOSIC RIVER
FILE NAME: 87e045/str/se045xs2.dgn		PLOT DATE:	08-FEB-2008
PROJECT MANAGER: R. WHITCOMB		DRAWN BY:	J.GILMORE
DESIGNED BY: C. CARLSON		IPARM NAME:	se045sx6.i
		SHEET 81 OF 108	

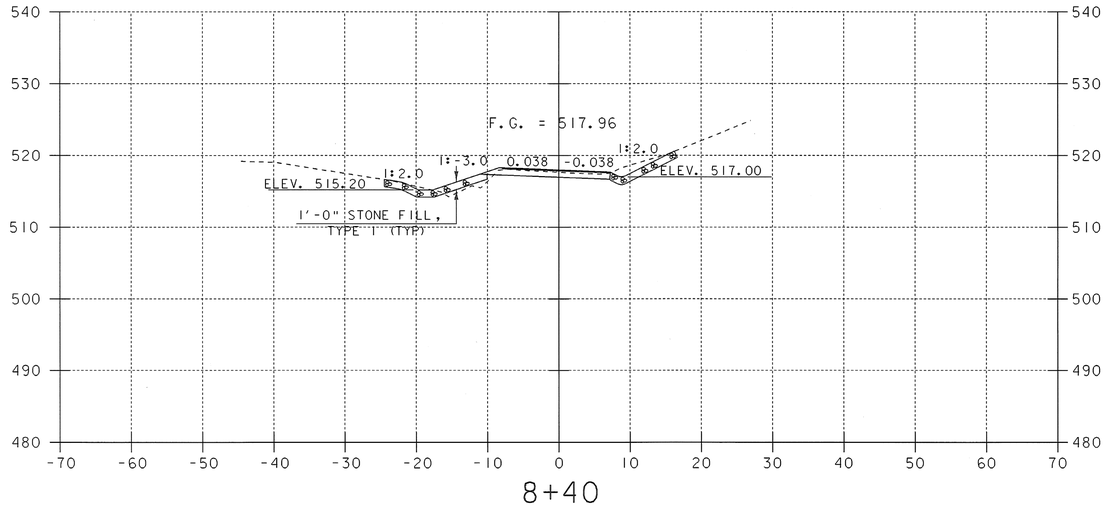

8+40

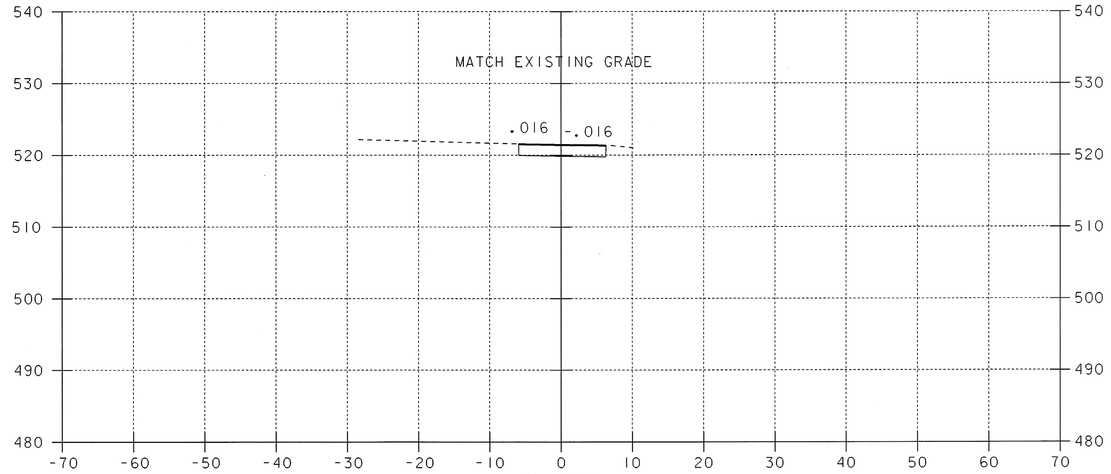

8+75

END TH 26

SIDELINE CONSTRUCTION

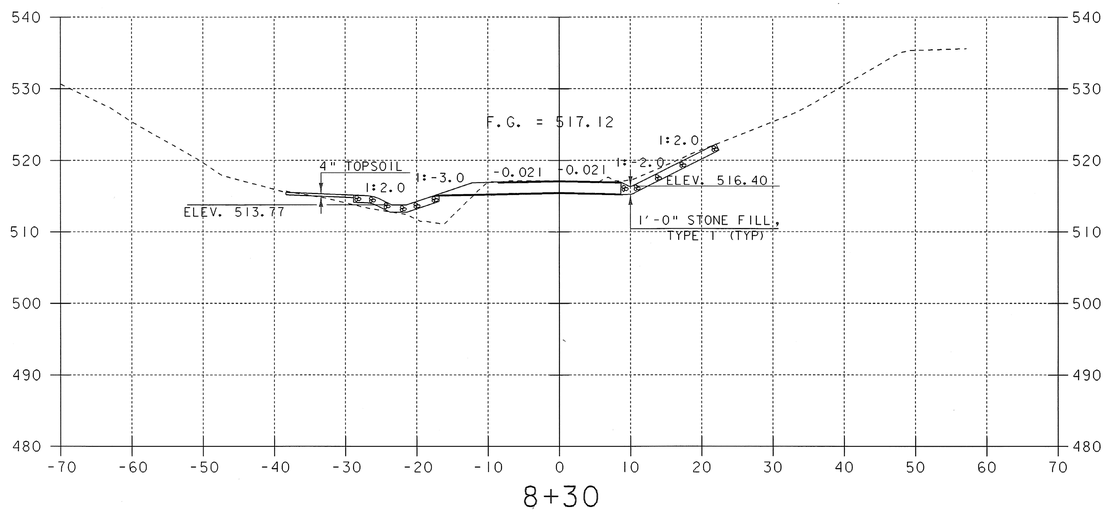

8+30

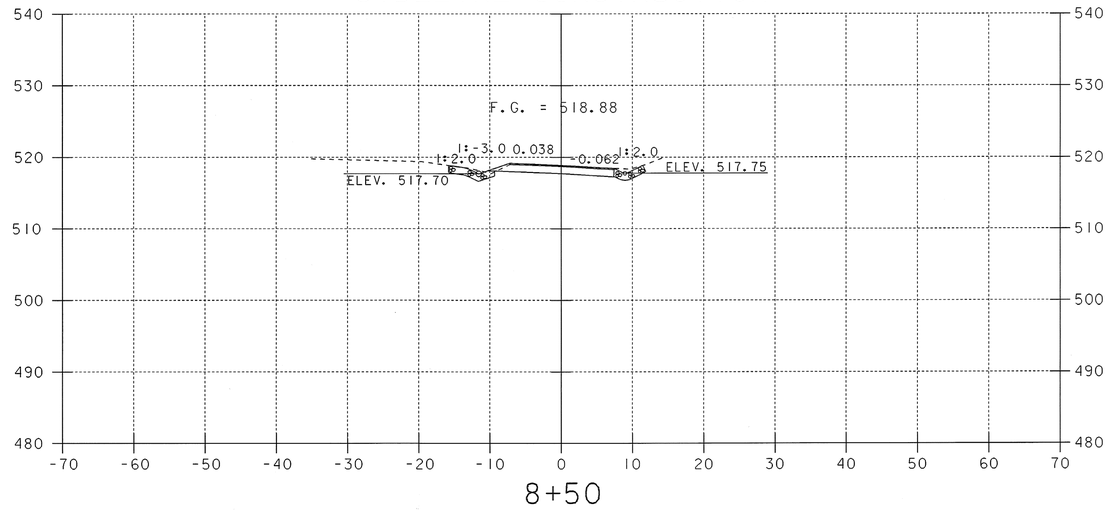

8+50

STA 8+55.0 LT AND RT
END STONE LINED DITCH

SCALE 1" = 10'-0
10 0 10

FURLONG ROAD

SHEET NAME:	TOWN HIGHWAY 26 CROSS SECTIONS		
PROJECT NAME:	POWNAL	HIGHWAY NO.:	TH 24
PROJECT NUMBER:	BRZ 1441(19) C/2	BRIDGE NO.:	41
		OVER:	HOOSIC RIVER
FILE NAME: 87e045/str/se045xs2.dgn		PLOT DATE:	08-FEB-2008
PROJECT MANAGER: R. WHITCOMB		DRAWN BY:	J.GILMORE
DESIGNED BY:	C. CARLSON	IPARM NAME:	se045sx7.1
		SHEET	82 OF 108

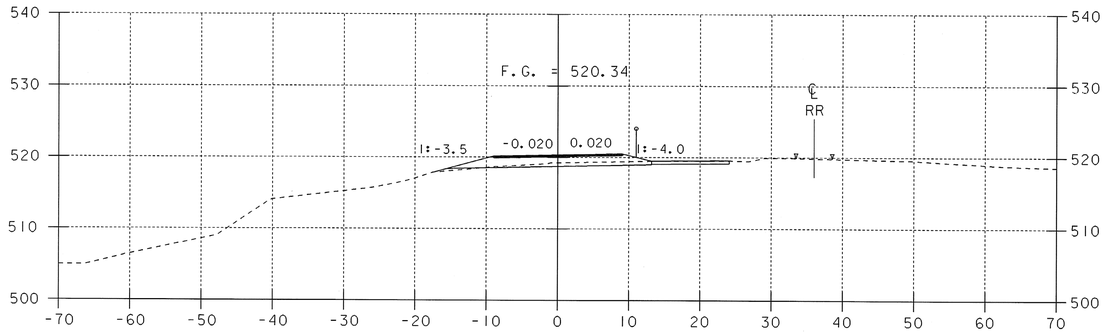

5+75

STA. 6+91.3 RT.
END CHAIN-LINK FENCE, 6 FEET

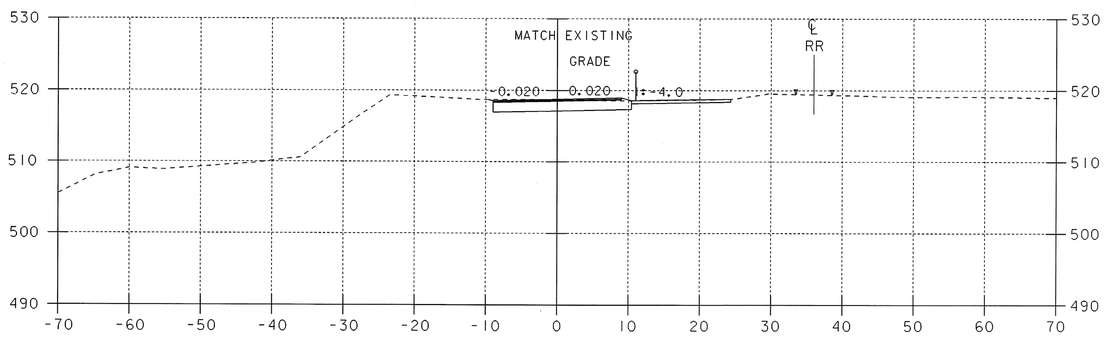

END WWTF SIDELINE CONSTRUCTION
STA 6+50

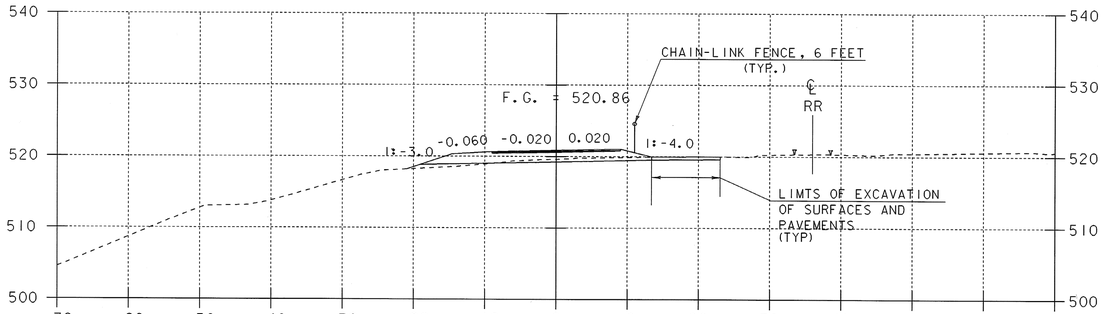

5+50

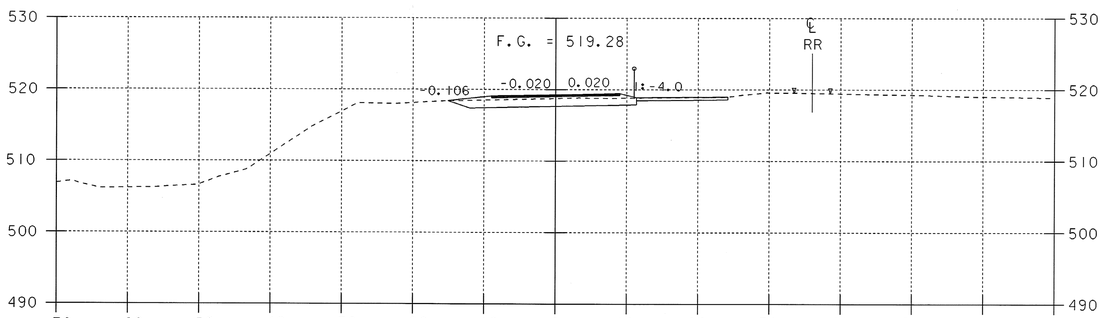

6+25

STA. 5+27.8 RT.
BEGIN CHAIN-LINK FENCE, 6 FEET

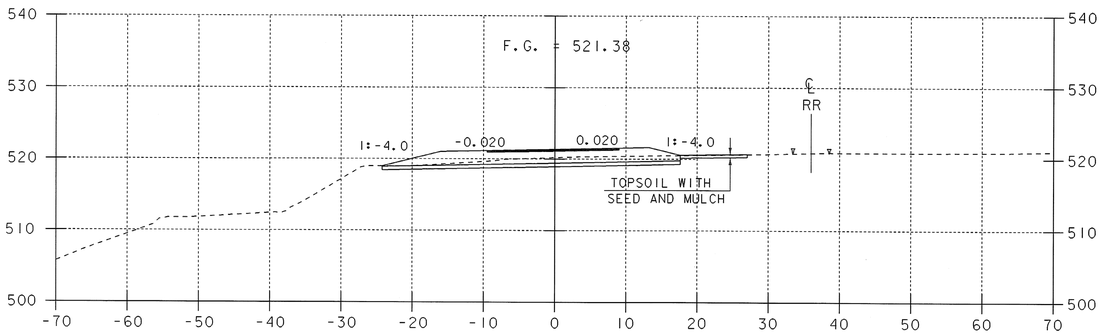

5+25

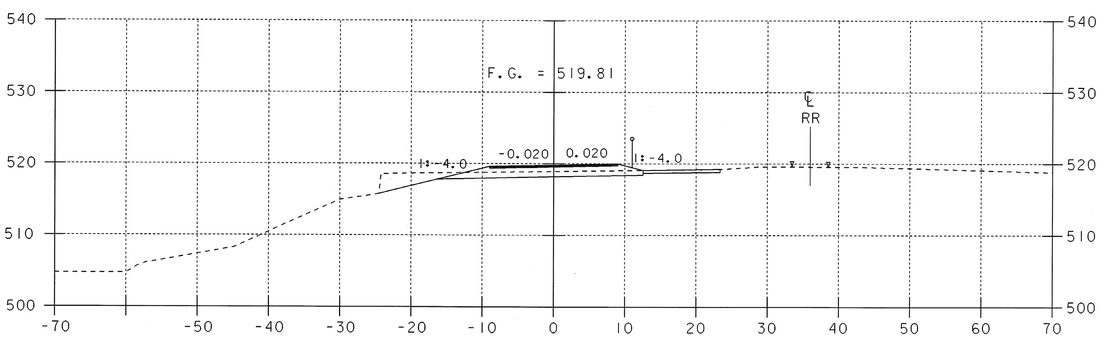

6+00

BEGIN WWTF SIDELINE CONSTRUCTION
STA 5+12

SCALE 1" = 10'-0
10 0 10

SHEET NAME:	WWTF CROSS SECTIONS		
PROJECT NAME:	POWNAL	HIGHWAY NO.:	TH 24
PROJECT NUMBER:	BRZ 1441(19) C/2	BRIDGE NO.:	41
		OVER:	HOOSIC RIVER
FILE NAME: 87e045/str/se045xs2.dgn		PLOT DATE:	08-FEB-2008
PROJECT MANAGER: R. WHITCOMB		DRAWN BY:	J.GILMORE
DESIGNED BY: C. CARLSON		IPARM NAME:	se045sx8.i
		SHEET 83 OF 108	

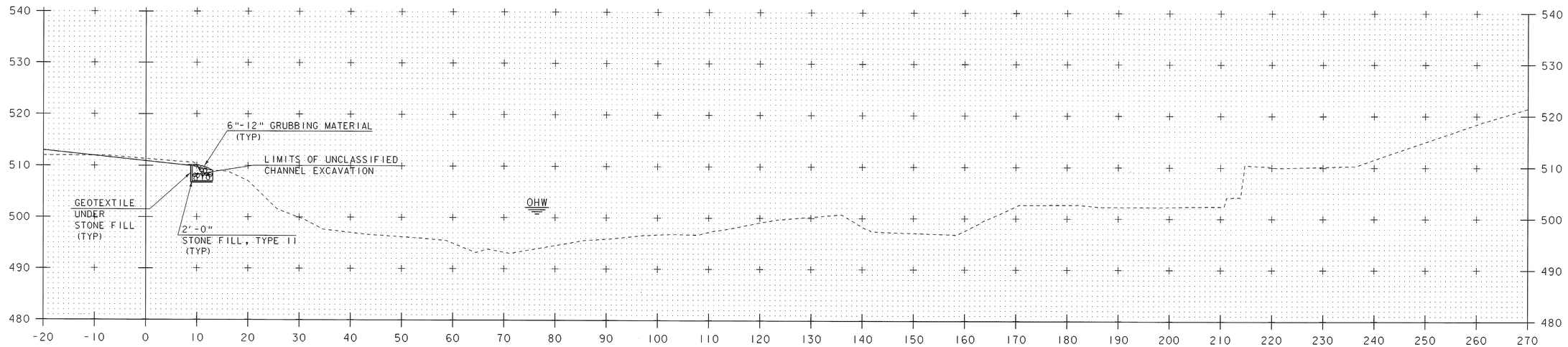

STA. 4+55.00
BEGIN UNCLASSIFIED CHANNEL EXCAVATION,
GRUBBING MATERIAL, GEOTEXTILE UNDER STONE FILL
AND STONE FILL, TYPE II

4+60

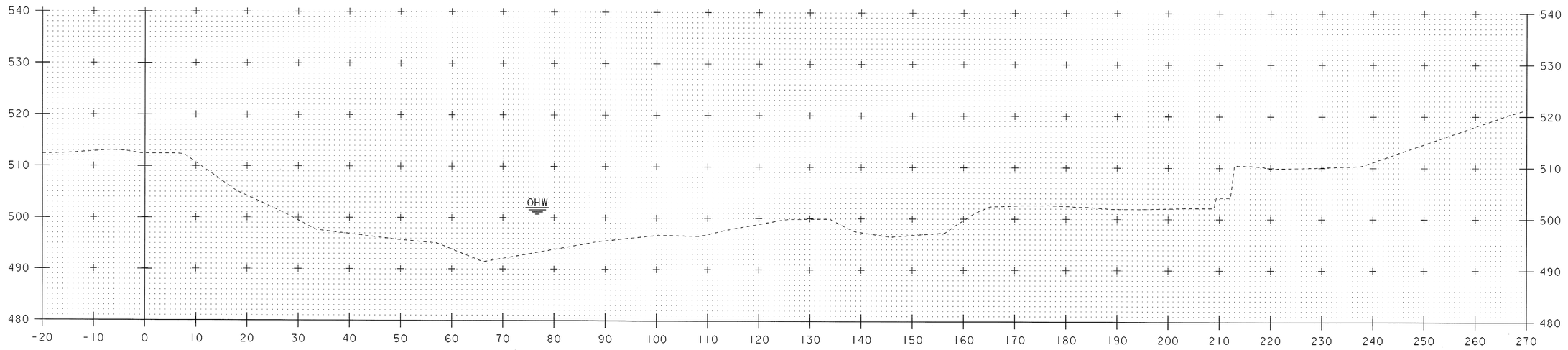

4+50

CHANNEL CROSS SECTIONS

PROJECT NAME: POWNAL
PROJECT NUMBER: BRZ 1441(19) C/2

FILE NAME: /87e045/str/se045xs2.dgn
PROJECT LEADER: R. WHITCOMB
DESIGNED BY: C. CARLSON
se045cxl.i

PLOT DATE: 08-FEB-2008
DRAWN BY: STR3
CHECKED BY: C. CARLSON
SHEET 84 OF 108

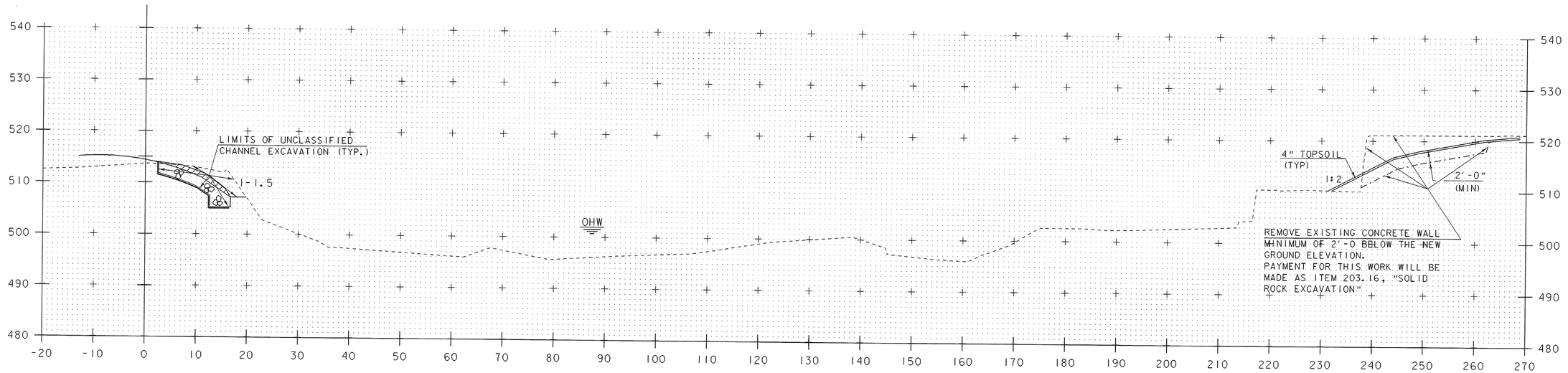

STA. 4+76.00
BEGIN STRUCTURE EXCAVATION AND
GRANULAR BACKFILL FOR STRUCTURES

4+75

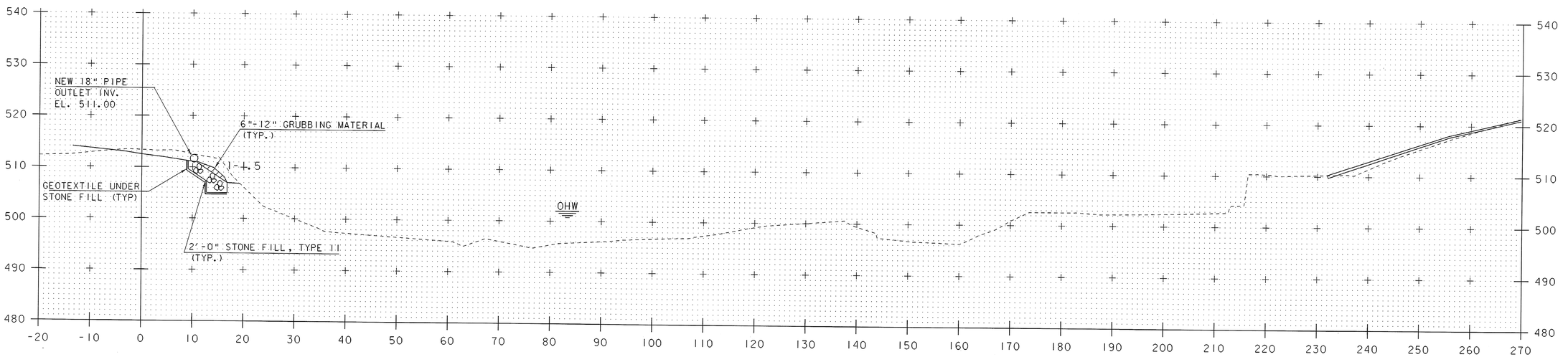

4+70

CHANNEL CROSS SECTIONS

PROJECT NAME:	POWNAL
PROJECT NUMBER:	BRZ 1441(19) C/2
FILE NAME: /87e045/str/se045xs2.dgn	PLOT DATE: 08-FEB-2008
PROJECT LEADER: R. WHITCOMB	DRAWN BY: STR3
DESIGNED BY: C. CARLSON	CHECKED BY: C. CARLSON
se045cx2.i	SHEET 85 OF 108

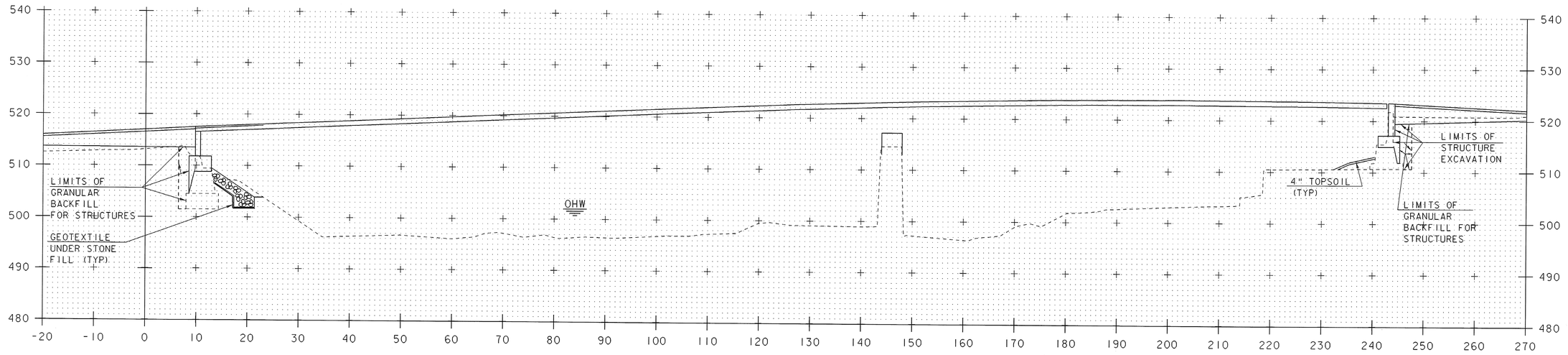

STA. 4+86.00
END GRUBBING MATERIAL

4+90

STA. 4+80.9 RT.
BEGIN STRUCTURE EXCAVATION AND GRANULAR BACKFILL FOR STRUCTURES

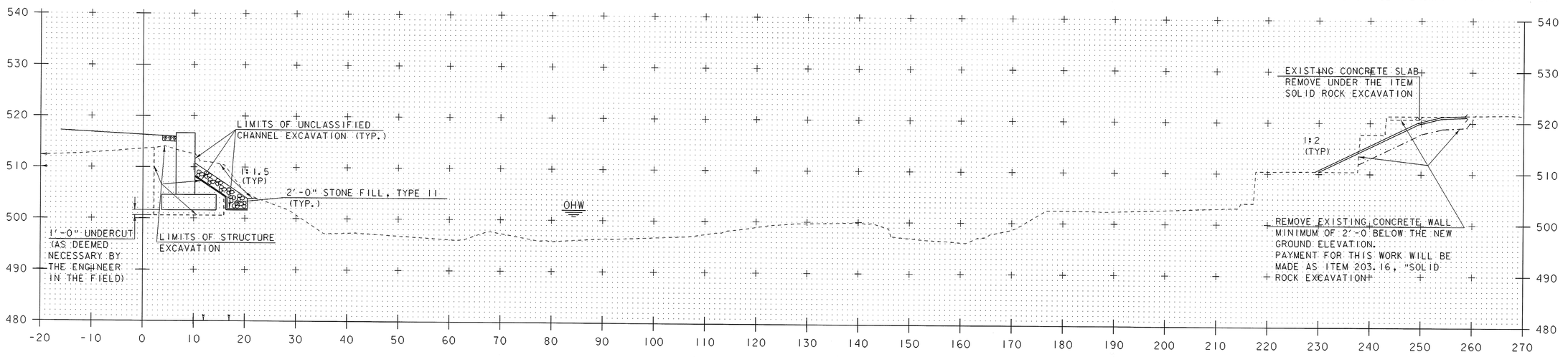

4+80

CHANNEL SECTIONS

PROJECT NAME: POWNAL
PROJECT NUMBER: BRZ 1441(19) C/2

FILE NAME: /87e045/str/se045xs2.dgn
PROJECT LEADER: R. WHITCOMB
DESIGNED BY: C. CARLSON
se045cx3.i

PLOT DATE: 08-FEB-2008
DRAWN BY: STR3
CHECKED BY: C. CARLSON
SHEET 86 OF 108

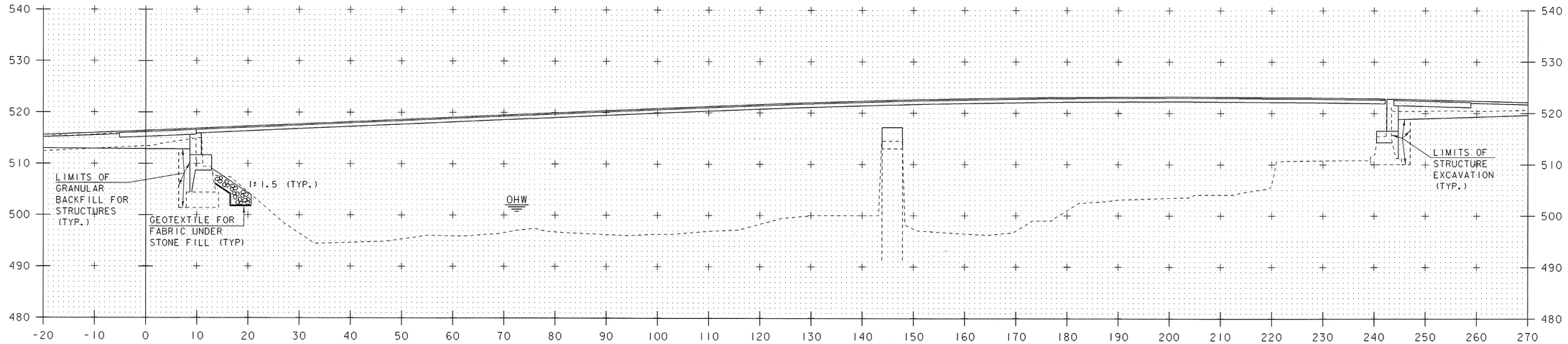

5+10

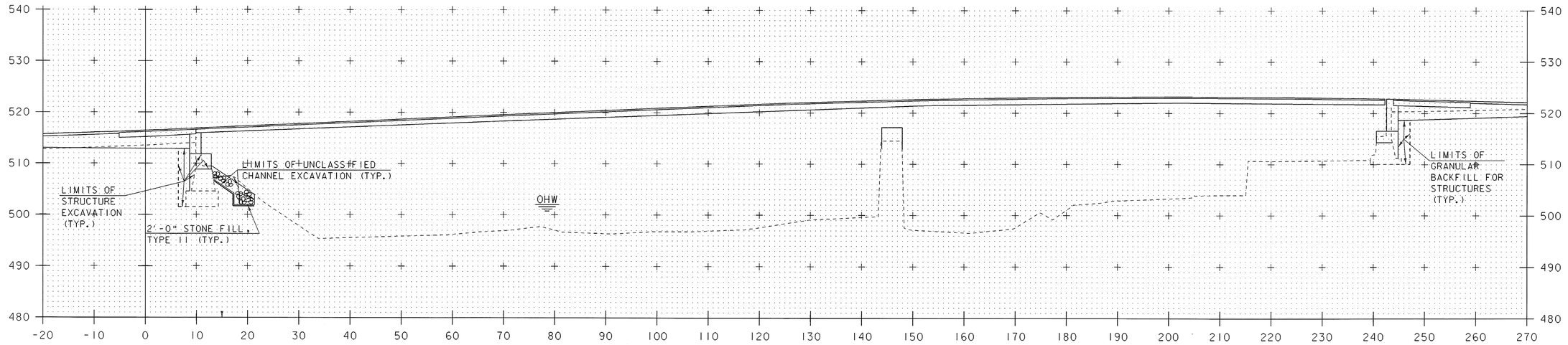

5+00

CHANNEL CROSS SECTIONS

PROJECT NAME:	POWNAL
PROJECT NUMBER:	BRZ 1441(19) C/2

FILE NAME: /87e045/str/se045xs2.dgn	PLOT DATE: 08-FEB-2008
PROJECT LEADER: R. WHITCOMB	DRAWN BY: STR3
DESIGNED BY: C. CARLSON	CHECKED BY: C. CARLSON
se045cx4.i	SHEET 87 OF 108

STA. 5+28.3 RT.
END STRUCTURE EXCAVATION AND GRANULAR BACKFILL FOR STRUCTURES

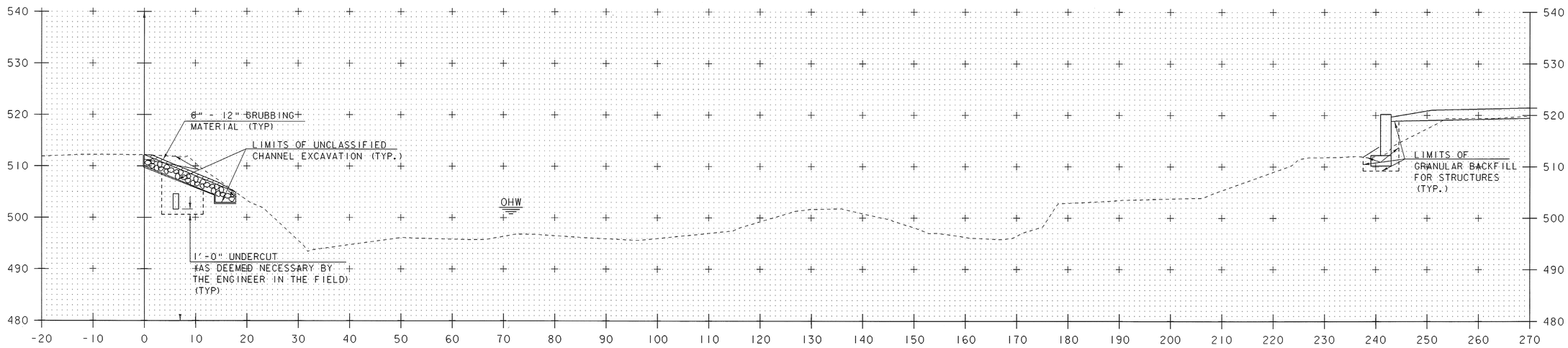

5+25

STA. 5+26
END STRUCTURE EXCAVATION AND
GRANULAR BACKFILL FOR STRUCTURES

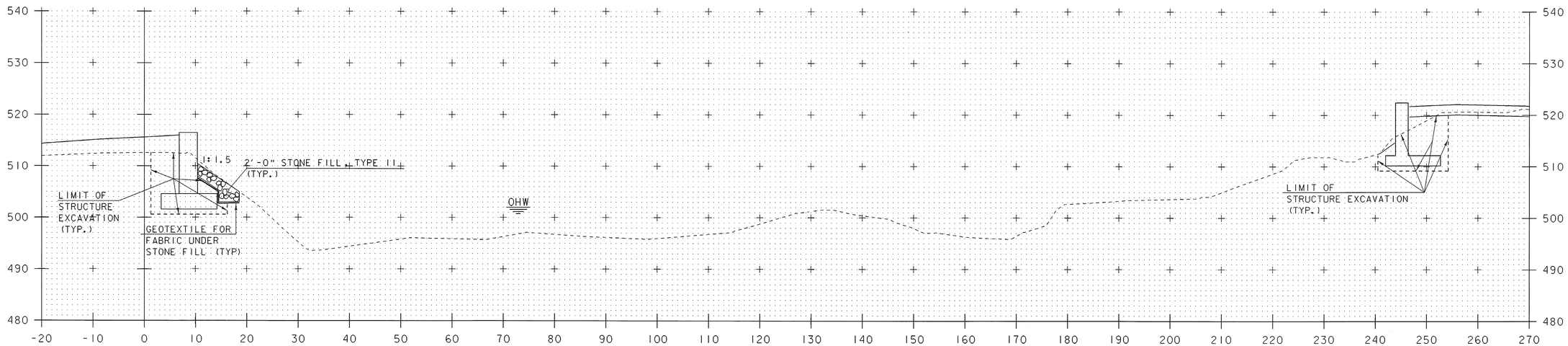

5+20

STA. 5+14.00
BEGIN GRUBBING MATERIAL

CHANNEL CROSS SECTIONS

PROJECT NAME: POWNAL
PROJECT NUMBER: BRZ 1441(19) C/2

FILE NAME: /87e045/str/se045xs2.dgn
PROJECT LEADER: R. WHITCOMB
DESIGNED BY: C. CARLSON
se045cx5.i

PLOT DATE: 08-FEB-2008
DRAWN BY: STR3
CHECKED BY: C. CARLSON
SHEET 88 OF 108

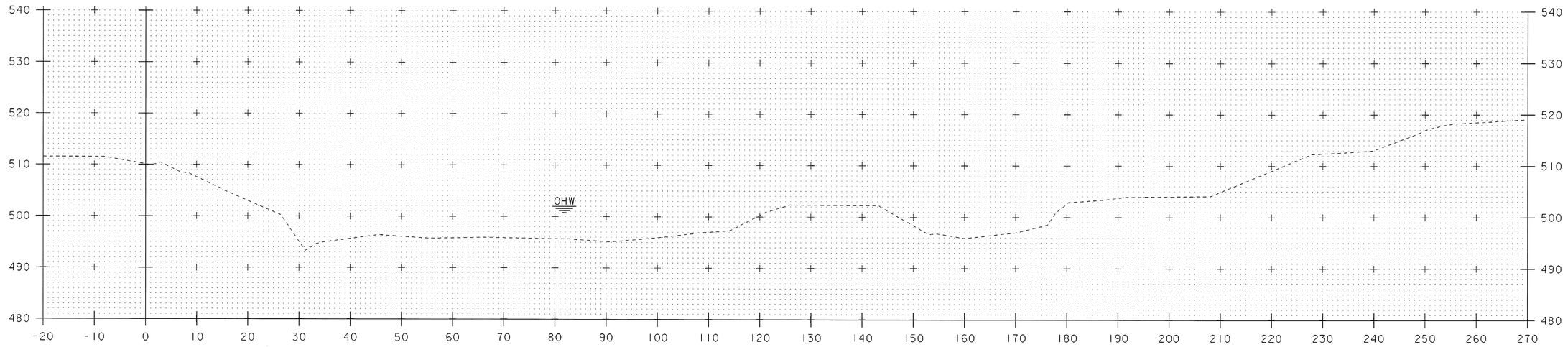

STA. 5+35.00
END UNCLASSIFIED CHANNEL EXCAVATION,
STONE FILL, TYPE II, GEOTEXTILE UNDER STONE
FILL AND GRUBBING MATERIAL

5+40

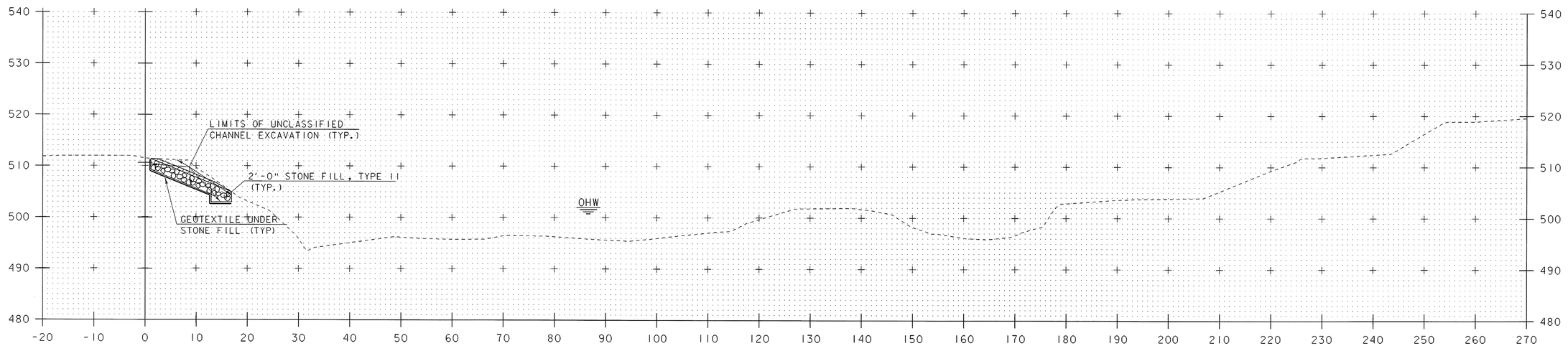

5+30

CHANNEL CROSS SECTIONS

PROJECT NAME: POWNAL
PROJECT NUMBER: BRZ 1441(19) C/2

FILE NAME: /87e045/str/se045xs2.dgn
PROJECT LEADER: R. WHITCOMB
DESIGNED BY: C. CARLSON
se045cx6.i

PLOT DATE: 08-FEB-2008
DRAWN BY: STR3
CHECKED BY: C. CARLSON
SHEET 89 OF 108

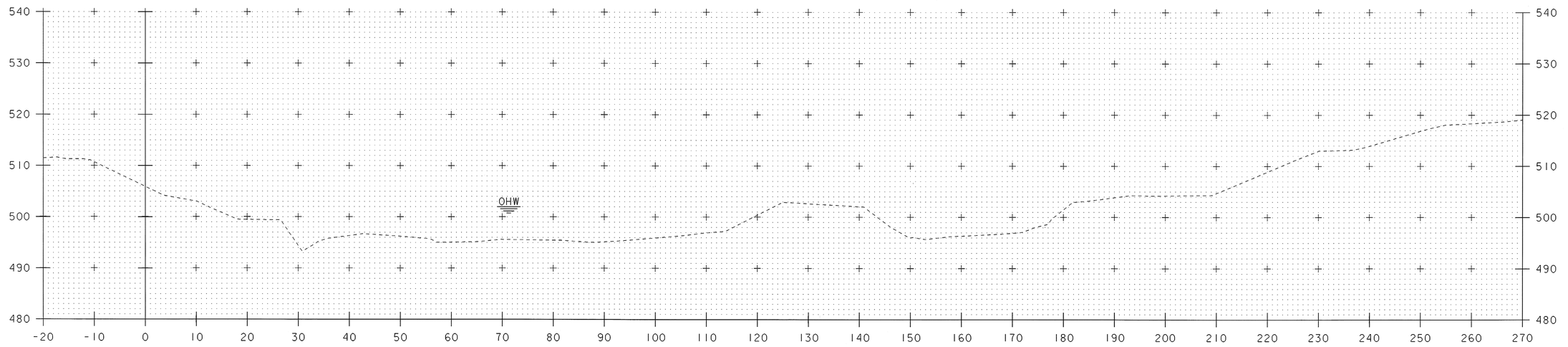

5+50

CHANNEL CROSS SECTIONS

PROJECT NAME: POWNAL
PROJECT NUMBER: BRZ 1441(19) C/2

FILE NAME: /87e045/str/se045xs2.dgn
PROJECT LEADER: R. WHITCOMB
DESIGNED BY: C. CARLSON
se045cx7.i

PLOT DATE: 08-FEB-2008
DRAWN BY: STR3
CHECKED BY: C. CARLSON
SHEET 90 OF 108

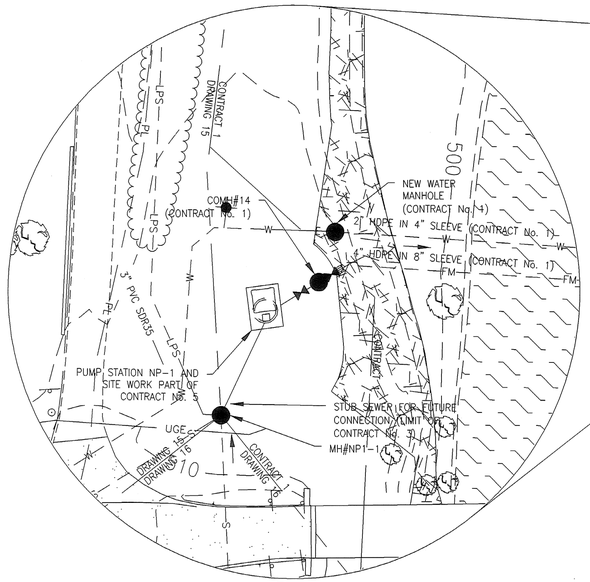

PLAN
SCALE: 1"=20'

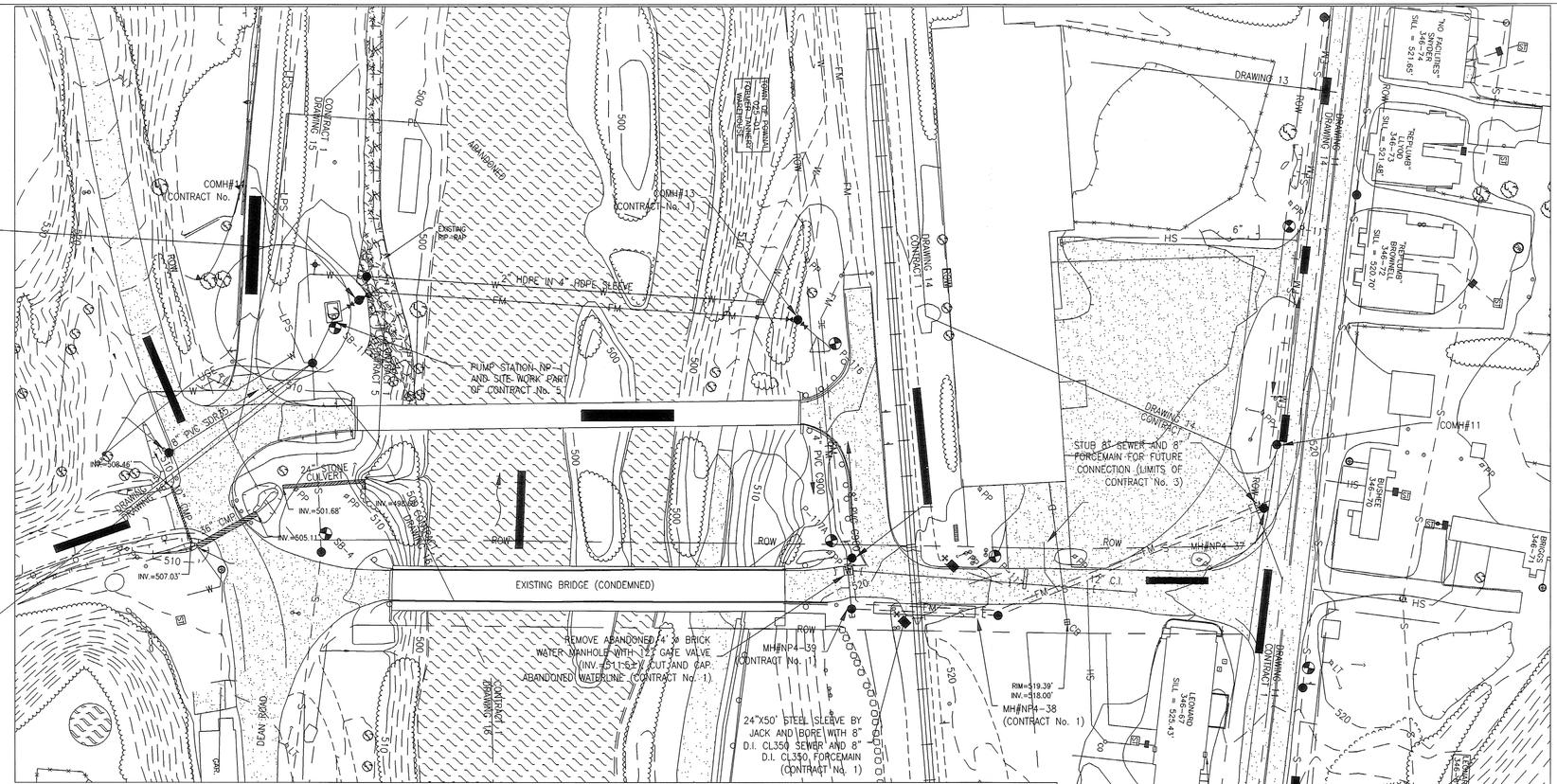

PLAN
SCALE: 1"=40'

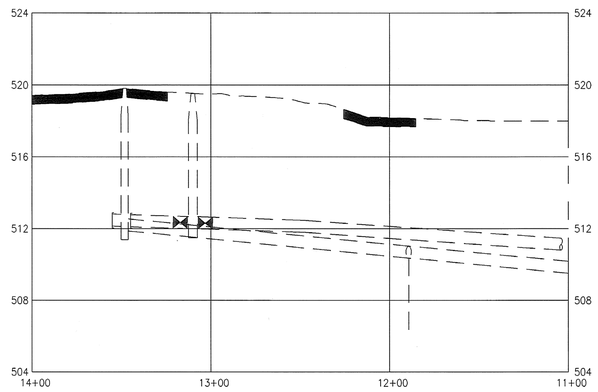

PROFILE
SCALE: HORZ.=1"=40'
VERT.=1"= 4'

RECORD
DRAWING

THE RECORD DRAWING INFORMATION FOR THIS PROJECT IS AS PROVIDED BY THE CONTRACTOR AND IS COMPILED FOR RECORD PURPOSES. THERE IS NO GUARANTEE OF ACCURACY.

POWNAL
BRZ 1441(19) C/2
EXISTING WATER AND SEWER
SHEET 90A OF 108

FA&A
Forcier Aldrich & Associates
Consulting Engineers
6 Market Place, Suite 2
Essex Junction, VT 05452
(802) 879-7733
(802) 879-1742 (Fax)

TOWN OF POWNAL
POWNAL, VERMONT

WASTEWATER COLLECTION SYSTEM
NORTH POWNAL SEWER SYSTEM
CONTRACT No. 3 AND No. 7

ROUTE 346 WESTSIDE GRAVITY SEWER AND FORCEMAIN PLAN AND PROFILE
STA. 11+00 TO 20+45

NO.	DATE	REVISION DESCRIPTION	CHECKED

DESIGNED JJD
DRAWN JEN
CHECKED DEP
DATE MAR. 2003

PROJECT NO. 02008
DRAWING NO. 14
SHEET 17

ROAD DIST. NO.	COUNTY	FED. AID PROJ. NO.	FISCAL YEAR	SHEET NO.	TOTAL SHEETS
9			1939	2	12

North Pownal

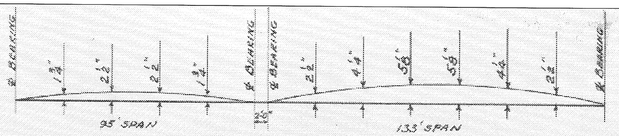

TRUSS CAMBER DIAGRAMS

THIS CAMBER TO BE RETAINED AFTER APPLICATION OF DEAD LOAD

STRINGERS

MOMENT		REACTION	
D.L.	26	D.L.	6.0
L.L.	41	L.L.	9.0
I.	14	I	4.0
TOTAL	81 K.FT.	TOTAL	19.0 K

FLOOR BEAMS

MOMENT		REACTION	
D.L.	114	D.L.	31.0
L.L.	96	L.L.	16.0
I	30	I	5.0
TOTAL	240 K.FT.	TOTAL	52.0

REINFORCING STEEL

No. 7 BAR ⅞"ø 21'-9½" LONG 185 REQ'D.	2"	19'-10½" 2" 6"
No. 8 BAR ⅞"ø 14'-18" LONG 185 REQ'D.	1⅛" R.	18'-4" 4" 1⅛" R.
No. 9 BAR ⅞"ø 20'-6½" LONG 185 REQ'D.	⅞" R.	⅞" SQ. 9'-2" 2'-6½" 2'-6½" 2'-6½"
No. 10 BAR ¾"ø 21'-0" LONG STRAIGHT	48 REQ'D.	
No. 11 BAR ¾"ø 21'-0" LONG STRAIGHT	328 REQ'D.	
No. 12 BAR ¾"ø 6'-0" LONG STRAIGHT	370 REQ'D.	

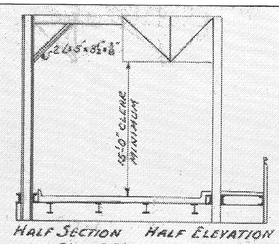

HALF SECTION HALF ELEVATION

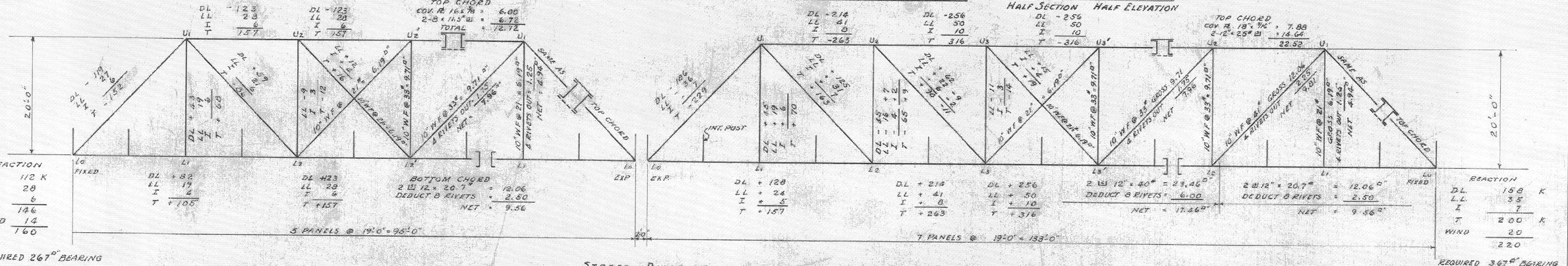

STRESS DIAGRAMS

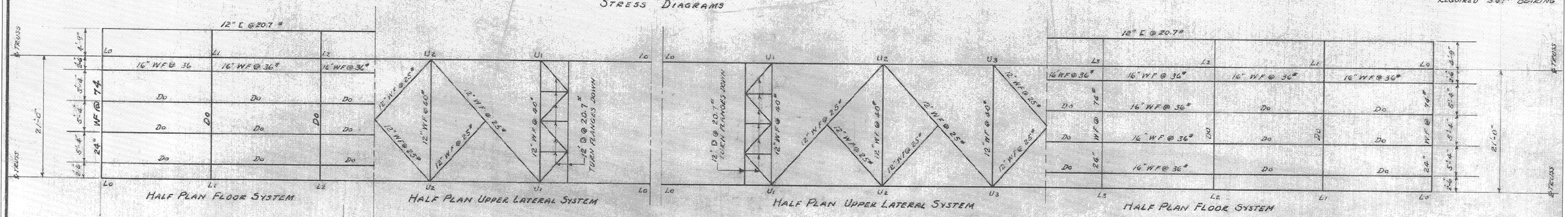

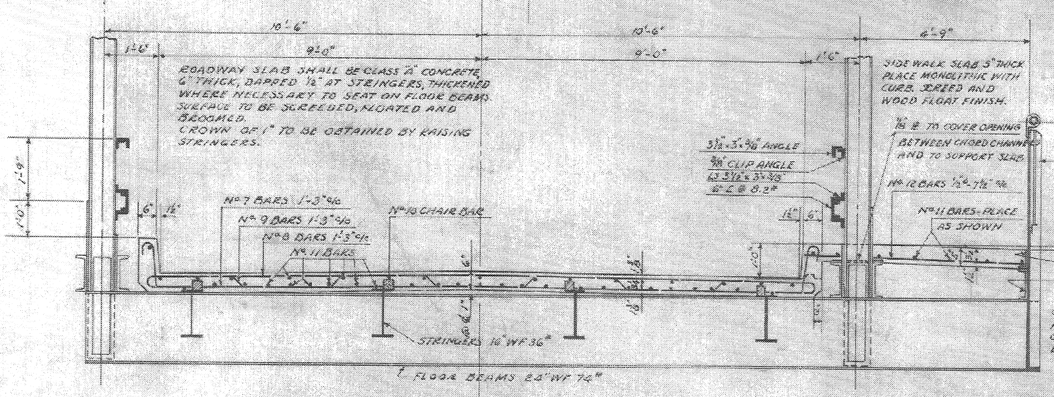

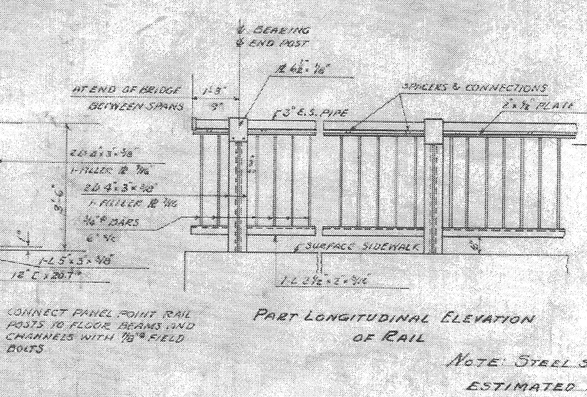

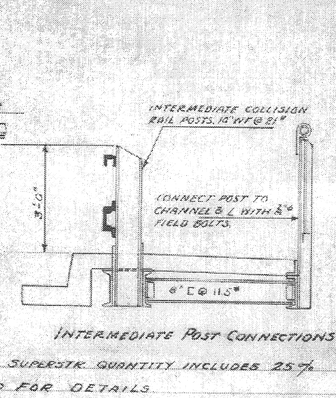

CONNECT PANEL POINT RAIL POSTS TO FLOOR BEAMS AND CHANNELS WITH ⅞" FIELD BOLTS

NOTE: STEEL SUPERSTR. QUANTITY INCLUDES 25% ESTIMATED FOR DETAILS

FLOOR DESIGNED FOR

DEAD LOAD - 6" CONCRETE SLAB + 25# PAVING ALLOWANCE
LIVE LOAD - 2 LANE H-10
IMPACT - 50/(L+125) WHEN L IS EFFECTIVE LOADED SPAN LENGTH FOR MEMBER UNDER CONSIDERATION.

TRUSS DESIGNED FOR

DEAD LOAD - CONCRETE 1350 + STEEL 150 = 2100# PER LIN. FT.
LIVE LOAD - 2 LANE H-10 LOADING A.A.S.H.O. SPECIFICATIONS 1935.
IMPACT - 50/(L+125)
RIVETS - ⅞"ø - GUSSETS ½" @ Lo, ⅞"(MIN.) ELSEWHERE

ALL STRUCTURAL STEEL SHALL BE PAINTED AS SPECIFIED UNDER ITEM 83 A-8 OF PAVEMENT & STANDARD ROAD AND BRIDGE SPECIFICATIONS 1936 UNLESS OTHERWISE DIRECTED BY THE ENGINEER. THE FINAL COAT OF FIELD PAINT SHALL BE GREEN.

ESTIMATED QUANTITIES

STEEL SUPERSTRUCTURE (266,000)	1 L.S.
CONCRETE CLASS "A"	63 C.Y.
REINFORCING STEEL	22394 LBS

POWNAL
BRZ 1441(19) C/2
REFERENCE SHEET 1 OF 18
SHEET 91 OF 108

SUPERSTRUCTURE DETAILS
VILLAGE BRIDGE
NORTH POWNAL

Surveyed by
Designed by W. H. DAY APRIL 1939
Drawn by W. H. DAY APRIL 1939
Traced by D. W. P.
Checked by L. M. B.
Series S.F.P. No. 1-8 Filed
Sheet 2 of 12 Sheets

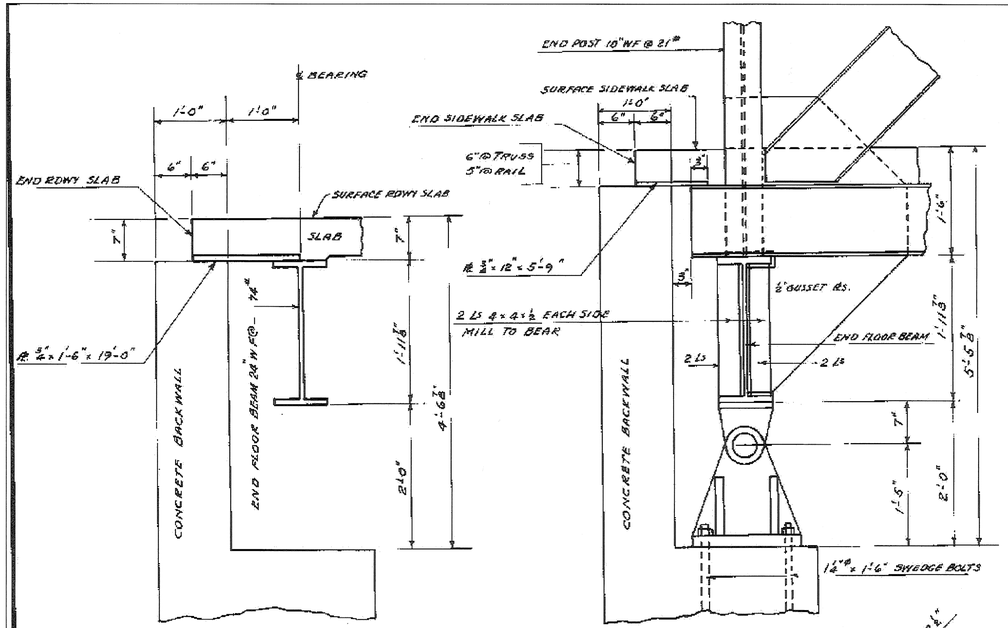

℄ Section @ Fixed End

Section @ Truss
Fixed End

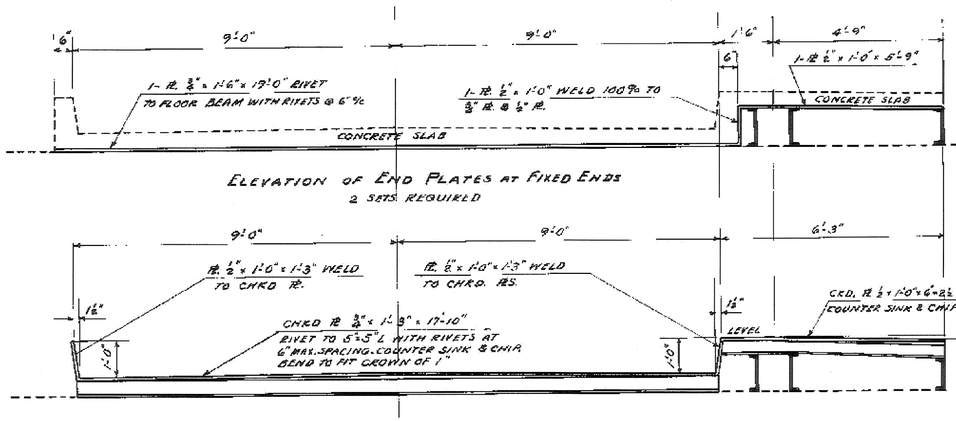

Elevation of End Plates at Fixed Ends
2 sets required

Elevation of End Dam
at
Expansion Ends
1-set required

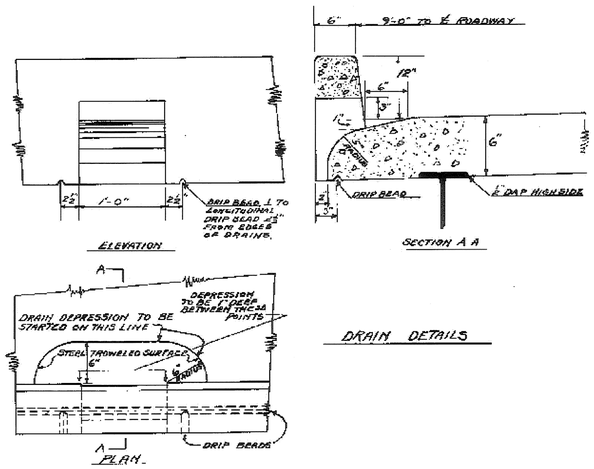

Drain Details

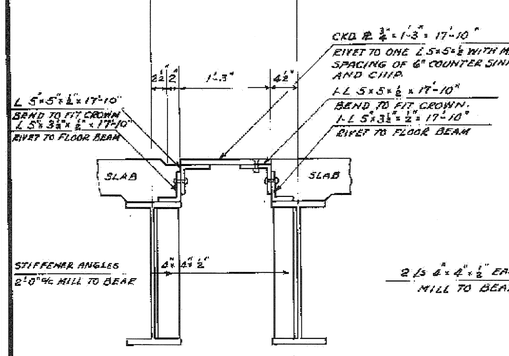

℄ Section
Expansion End

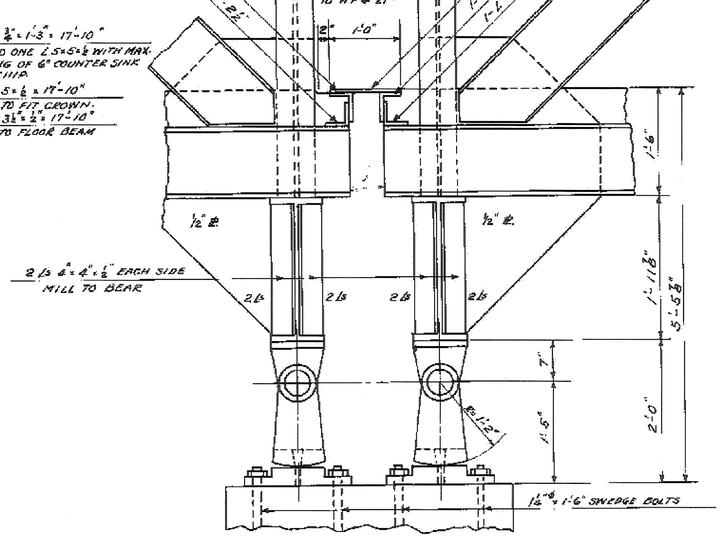

Section @ Truss
Expansion End

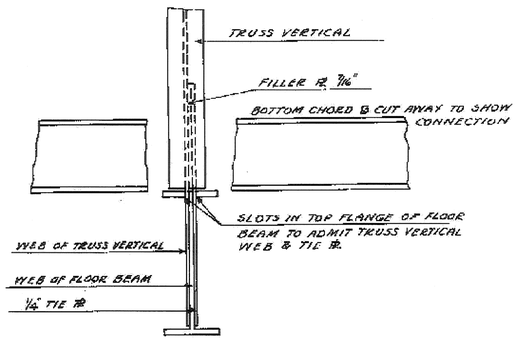

Floor Beam Connection
at
Intermediate Panel Point

NOTE: CARE SHOULD BE TAKEN TO SEE THAT THE SLAB STEEL IS BENT BACK OR CUT OFF SO THAT NONE WILL BE EXPOSED WHEN THE DRAIN FORM IS REMOVED. THESE DRAINS TO BE PLACED ONE ON EACH SIDE IN EACH TRUSS PANEL.

Superstructure Details
Village Bridge
North Pownal

ESTIMATED QUANTITIES

POWNAL
BRZ 1441(19) C/2
REFERENCE SHEET 2 OF 18
SHEET 92 OF 108

Surveyed by
Designed by W. H. DAY
Drawn by W. H. DAY
Traced by D. W. P.
Checked by L. M. B.
Series S.F.P. No. 18 Filed
Sheet 3 of 12 Sheets

1939 4 12
North Pownal

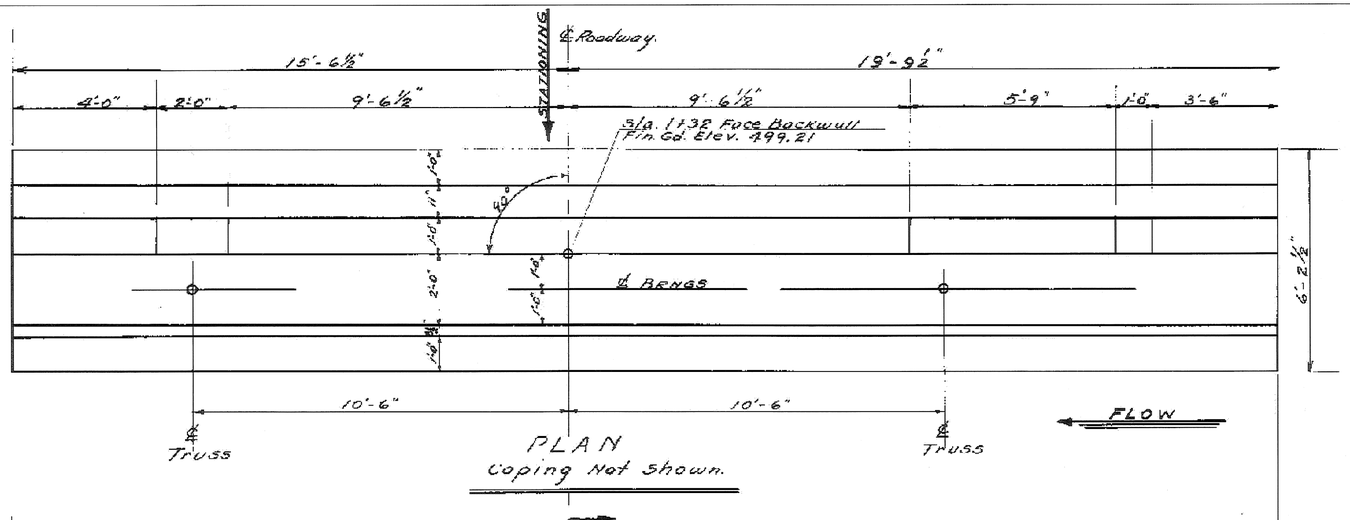

PLAN
Coping Not Shown.

REINFORCING STEEL				
BAR	SIZE	No. REQ'D	LENGTH	DETAIL
A1	½"ϕ	5	3.5'-0"	Straight
B1	⅜"ϕ	35	7'-0"	Straight, Bend in Field

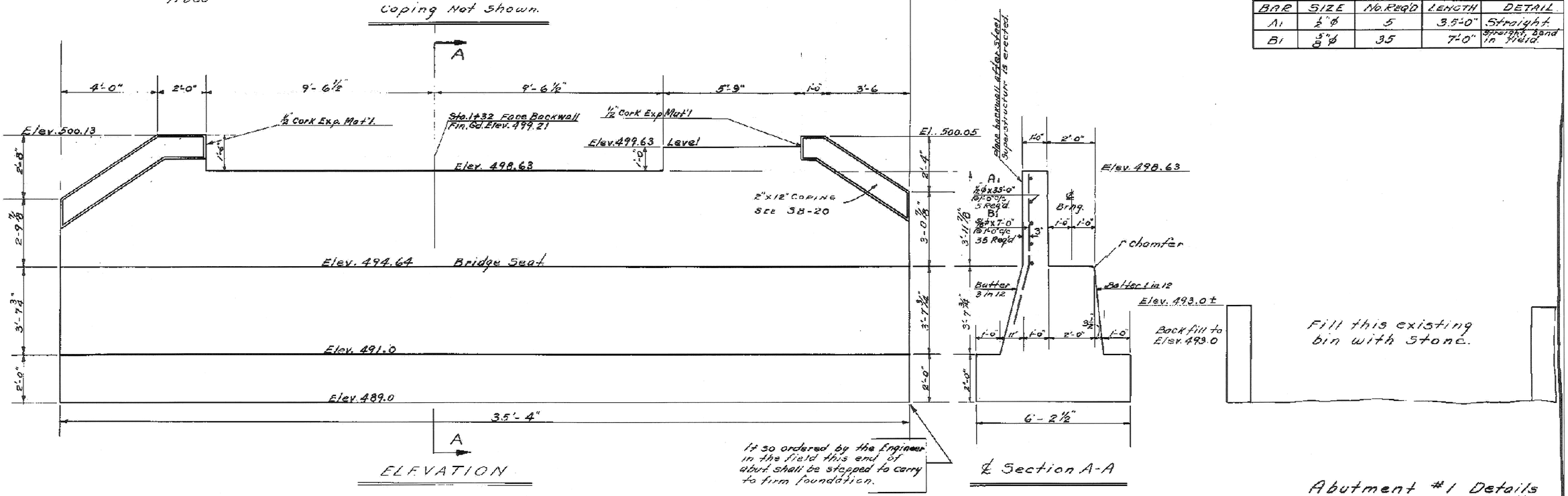

ELEVATION

It so ordered by the Engineer in the field this end of abut shall be stepped to carry to firm foundation.

℄ Section A-A

Abutment #1 Details
Village Bridge
North Pownal

POWNAL
BRZ 1441(19) C/2
REFERENCE SHEET 3 OF 18
SHEET 93 OF 108

ESTIMATED QUANTITIES

Structure Excavation-	7.5 CY
Concrete Class-C	3.9 CY
Reinforcing Steel	373 LBS
Stone Fill-Mod. (63-8)	40 CY

Surveyed by
Designed by W.H.D. 5/8/39
Drawn by W.H.D.
Traced by H.R.C.
Checked by L.M.B.
Series S.F.A. No. 1-B Filed
Sheet 4 of 12 Sheets

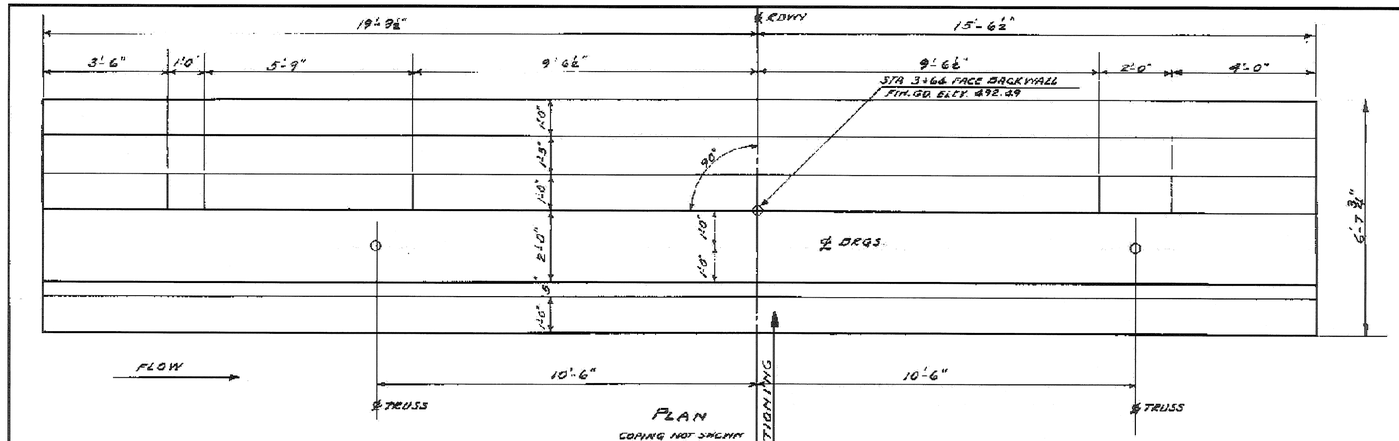

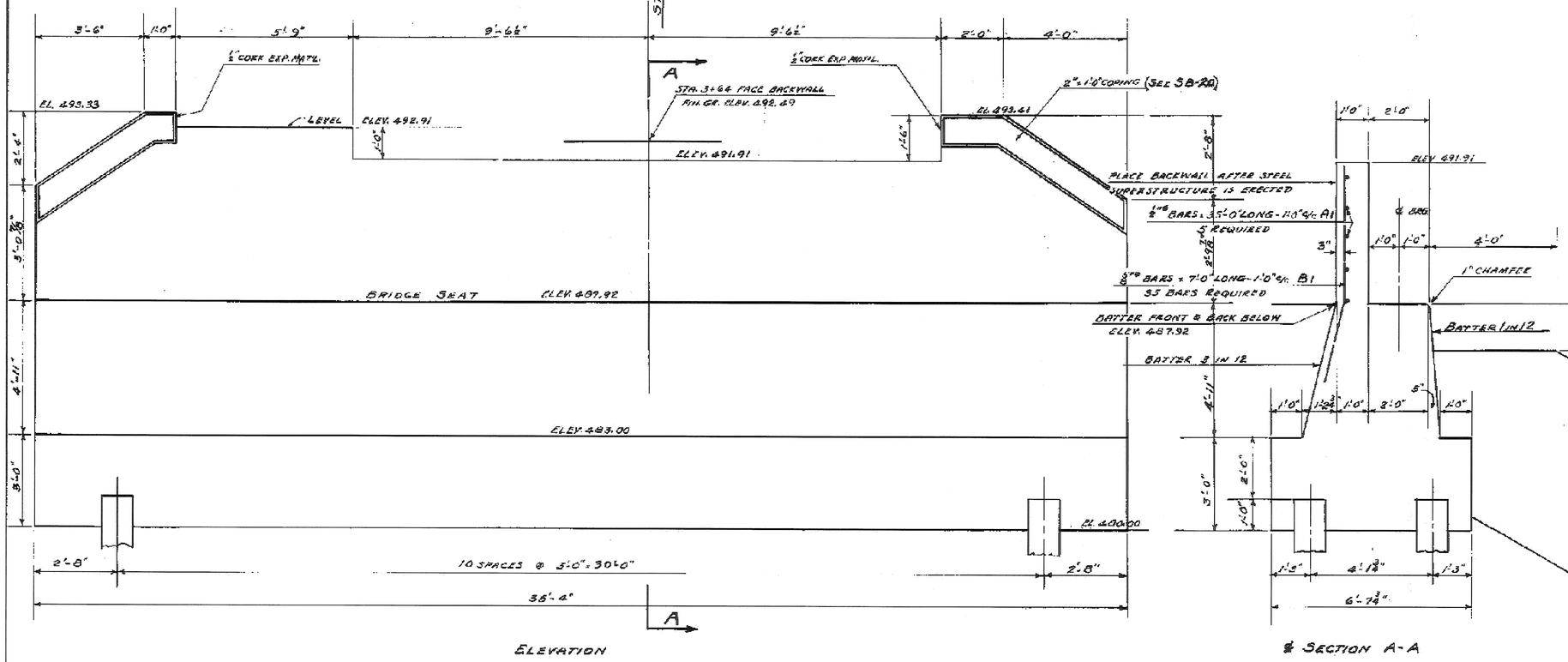

POWNAL
BRZ 1441(19) C/2
REFERENCE SHEET 4 OF 18
SHEET 94 OF 108

ABUTMENT #2 - DETAILS
VILLAGE BRIDGE
NORTH POWNAL

DRIVE PILES TO 18 TON CAPACITY. LENGTH 30'-0" FOR ESTIMATING PURPOSES ONLY.

ESTIMATED QUANTITIES

STRUCT. EXCAV.	132 C.Y.
CHANNEL EXCAV.	1430 C.Y.
CONCRETE CLASS "C"	56 C.Y.
REINFORCING STEEL	373 LBS.
TIMBER PILING	660 L.F.
STONE FILL	445 C.Y.

Surveyed by		
Designed by	W. H. D.	5/2/39
Drawn by	W. H. D.	5/2/39
Traced by	D. W. P.	
Checked by	L. M. B.	
Series S.F.P. No.	18	Filed

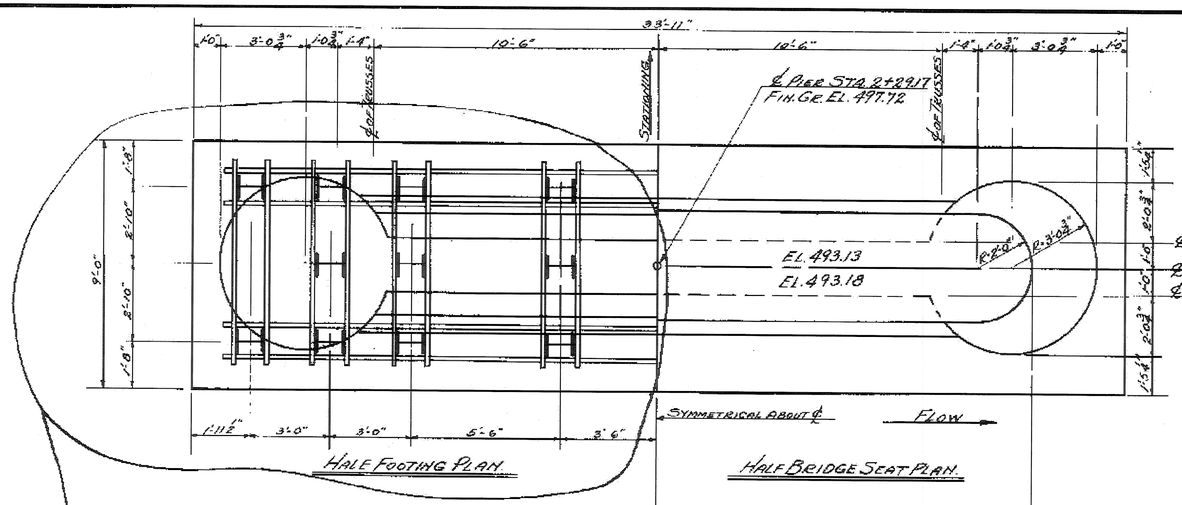

Half Footing Plan.

Half Bridge Seat Plan.

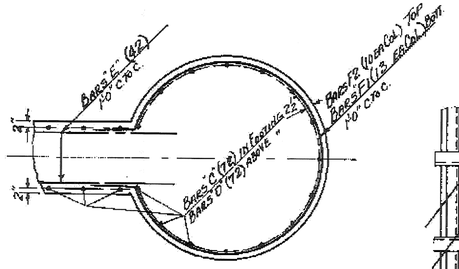

Typical Section of Columns
Scale ½" to 1'-0"

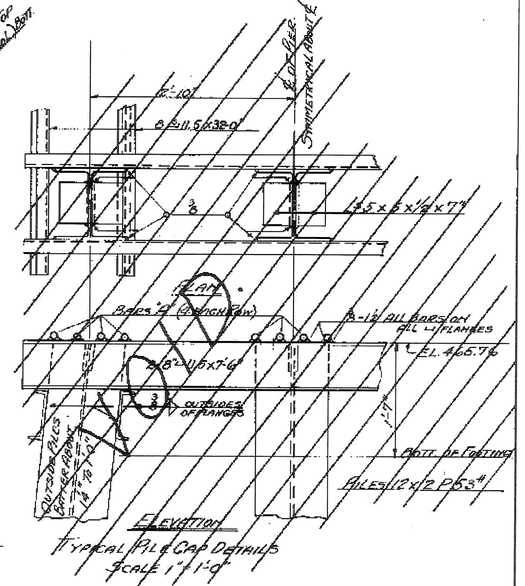

Typical Pile & Cap Details
Scale 1" = 1'-0"

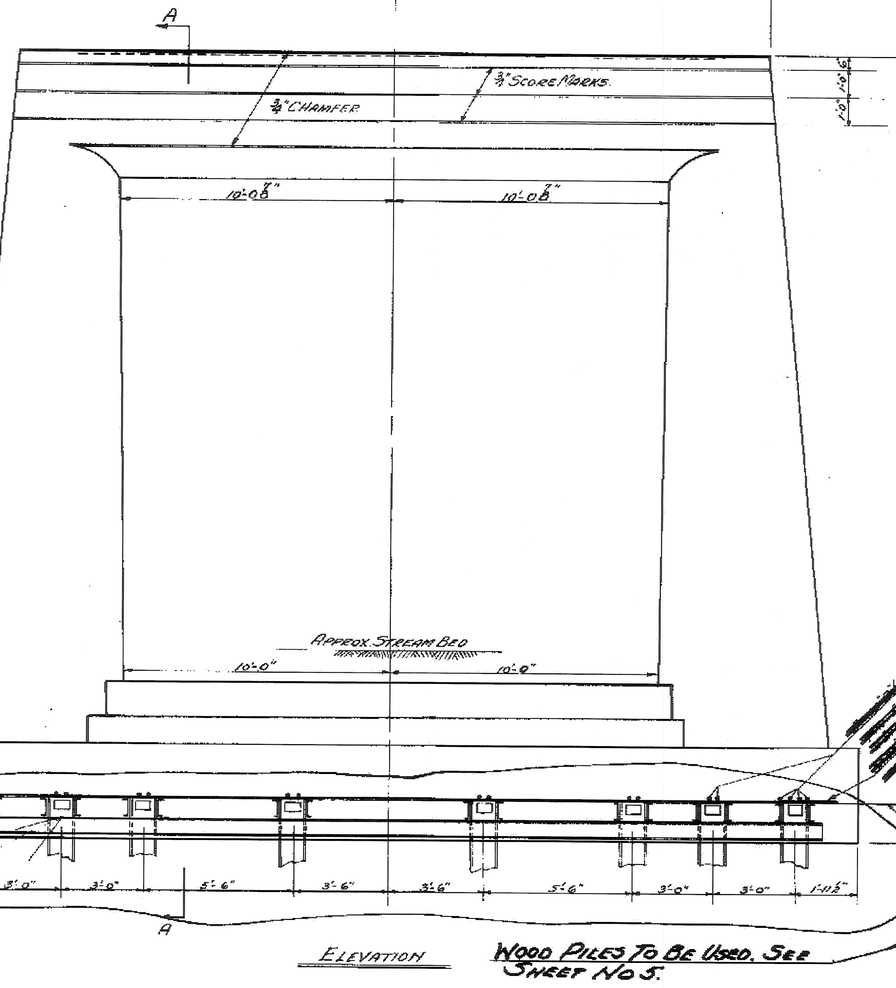

Elevation

Wood Piles To Be Used. See Sheet No 5.

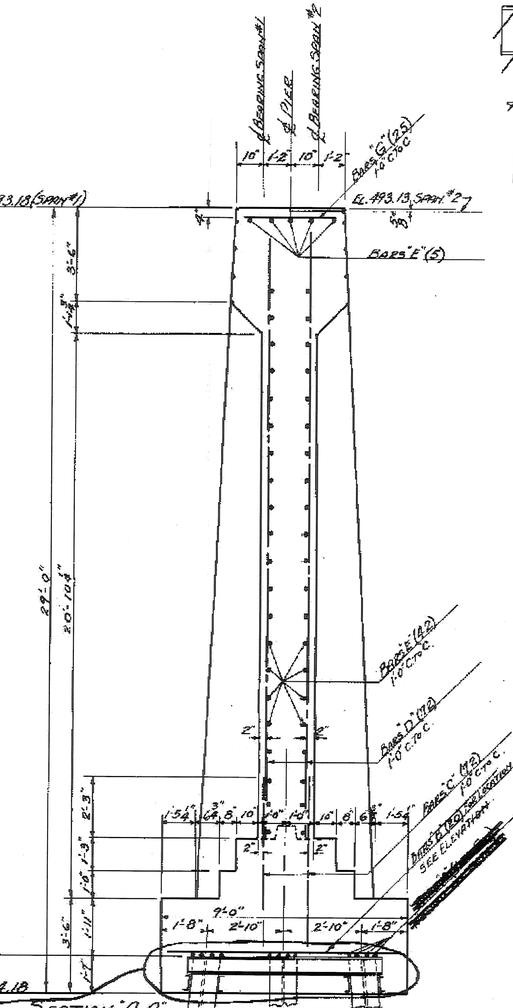

Section "A-A"

Reinforcing Steel

Bar	Size	No. Req'd	Total Length	Detail
C	5/16 ø	72	6'-6"	"
D	5/16 ø	72	22'-6"	"
E	1/2 ø	47	24'-6"	"
F1	3/4 ø	26	18'-9"	Straight. Bend to fit in field. 2 extras allowed for each ℄ Footing Not Shown
F2	3/4 ø	20	16'-9"	Straight. Bend to fit in field.
G	1/2 ø	25	3'-6"	Straight.

Notes

Piling:- To be steel H piles. Assumed length for estimating purposes only 60'. All piles to be driven between the end floor beams of existing trusses. This necessitates the use of self section followers of a maximum length of 36'. Piles to be driven to ledge. Individual piles may be spliced at the discretion of the Contractor, but such splices shall be approved in writing by the Engineer before proceeding with the work. Piles to be cut off level at El. 465.76 (±0.1') and reasonably smooth.

Structural Steel:- To include channel ties and angle caps as indicated together with all welding for same and for the 'A' Base reinforcing.

Structure Excavation:- See "Special Provisions"

~~Shoring and Sheeting:- See "Special Provisions"~~

~~Steel piling is used the Steam Hammer~~

~~Timber piles shall be Red Pine No. 1~~

~~Preservative Treatment to be 8 lbs. Creosote~~

Timber piling Alternate:- See Sheet # 5.

Details of New Pier
Village Bridge
North Pownal

Scale:- 3/8" = 1'-0" Except Noted.

Estimated Quantities	
Structure Excavation.	300 CY.
Concrete Class "B"	129 CY.
Reinforcing Steel.	4160 Lbs.
Structural Steel.	3300 Lbs.
Steel Piling.	1320 L.F.

POWNAL
BRZ 144(19) C/2
REFERENCE SHEET 5 OF 18
SHEET 95 OF 108

Surveyed by
Designed by H.E.S. Nov. 1940
Drawn by H.E.S.
Traced by H.R.C.
Checked by W.H.D.
Series St. Fd. No. 1-B (2) Filed

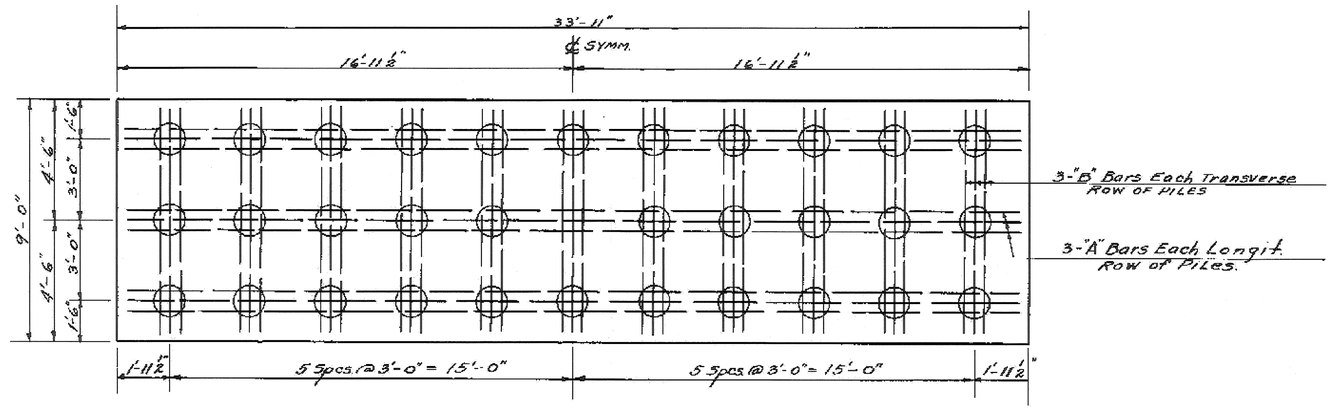

TIMBER PILING PLAN
32 PILES REQUIRED.

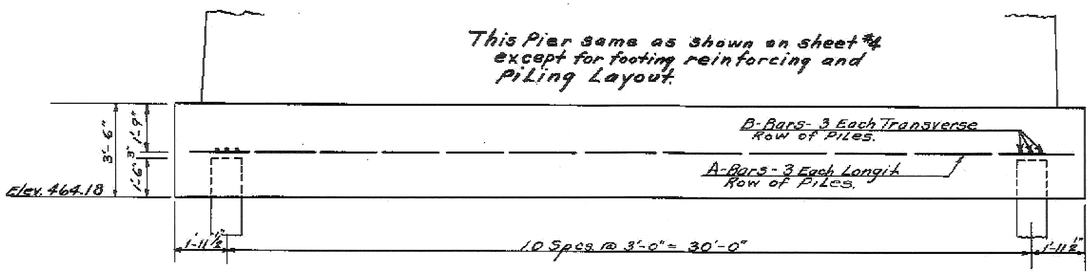

FOOTING ELEVATION

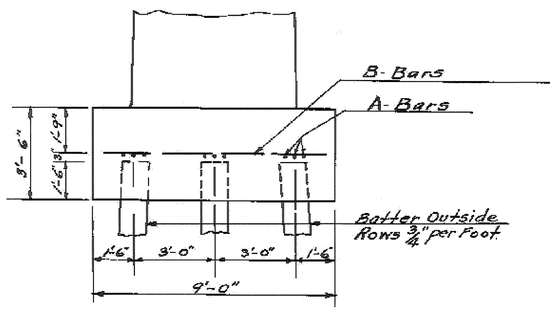

PART END ELEVATION

FOR ADDITIONAL PIER DETAILS SEE SHEET NO 4.

Footing Reinforcement

9-"A" Bars ¾ ϕ x 33'-0" Long Straight.
33-"B" Bars ¾ ϕ x 8'-6" Long Straight.

"NOTES"

PILING: Timber piles to be driven full Length, no splice. Length for estimating purposes only, 60'. Piles to have a minimum capacity of 20 tons.

[redacted] Use this sheet in Conjunction with Sheet #4

Jacking & Shoring: [redacted] The existing superstructures shall be moved apart without disturbing the end dams, to provide sufficient clearance for driving Piles. For additional information see "Special Provisions."

POWNAL
BRZ 144(19) C/2
REFERENCE SHEET 6 OF 18
SHEET 96 OF 108

TIMBER PILING PLAN FOR NEW PIER.

NORTH POWNAL VILLAGE BRIDGE.

SCALE ⅜"=1'-0"

ESTIMATED QUANTITIES

Str. Exc.	See Sheet #4
Conc. Cl. "B"	" " "
Reinf. Steel	" " "
Timber Piling	1860 Lin. Ft.

Surveyed by
Designed by W. H. DAY 6/19/41
Drawn by W. H. DAY.
Traced by H. R. C.
Checked by
Series ST. FL. No. 1 B (2) Filed
Sheet 5 of 6 Sheets

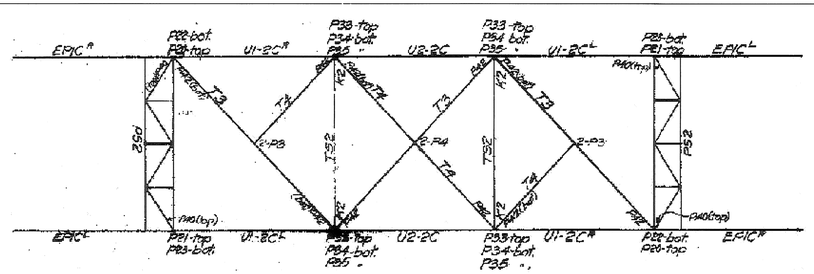
EP1C R
EP1C L
U1-2C R
U2-2C
U1-2C L
P22-bot P23-top
P38-top P34-bot P35 "
P33-top P34 bot P32 "
P21-bot P21-top
P21-top P23-bot
P24-bot P25 "
P33-top P34-bot P35 "
P22-bot P26-top
P32
P52
T3
T4
T2
T52
2-P3
2-P4
2-P2
2-P3
P40(top)
P41(top)
P42(top)
P43(top)
P44(top)
P45(top)
P46(top)
P47(top)
P48(top)
P49(top)
P50(top)
P51(top)
P52(top)
P53(top)
P54(top)
P55(top)
P56(top)
P57(top)
P58(top)
P59(top)
P60(top)
P61(top)
P62(top)
P63(top)
P64(top)
P65(top)
P66(top)
P67(top)
P68(top)
P69(top)
P70(top)
P71(top)
P72(top)
P73(top)
P74(top)
P75(top)
P76(top)
P77(top)
P78(top)
P79(top)

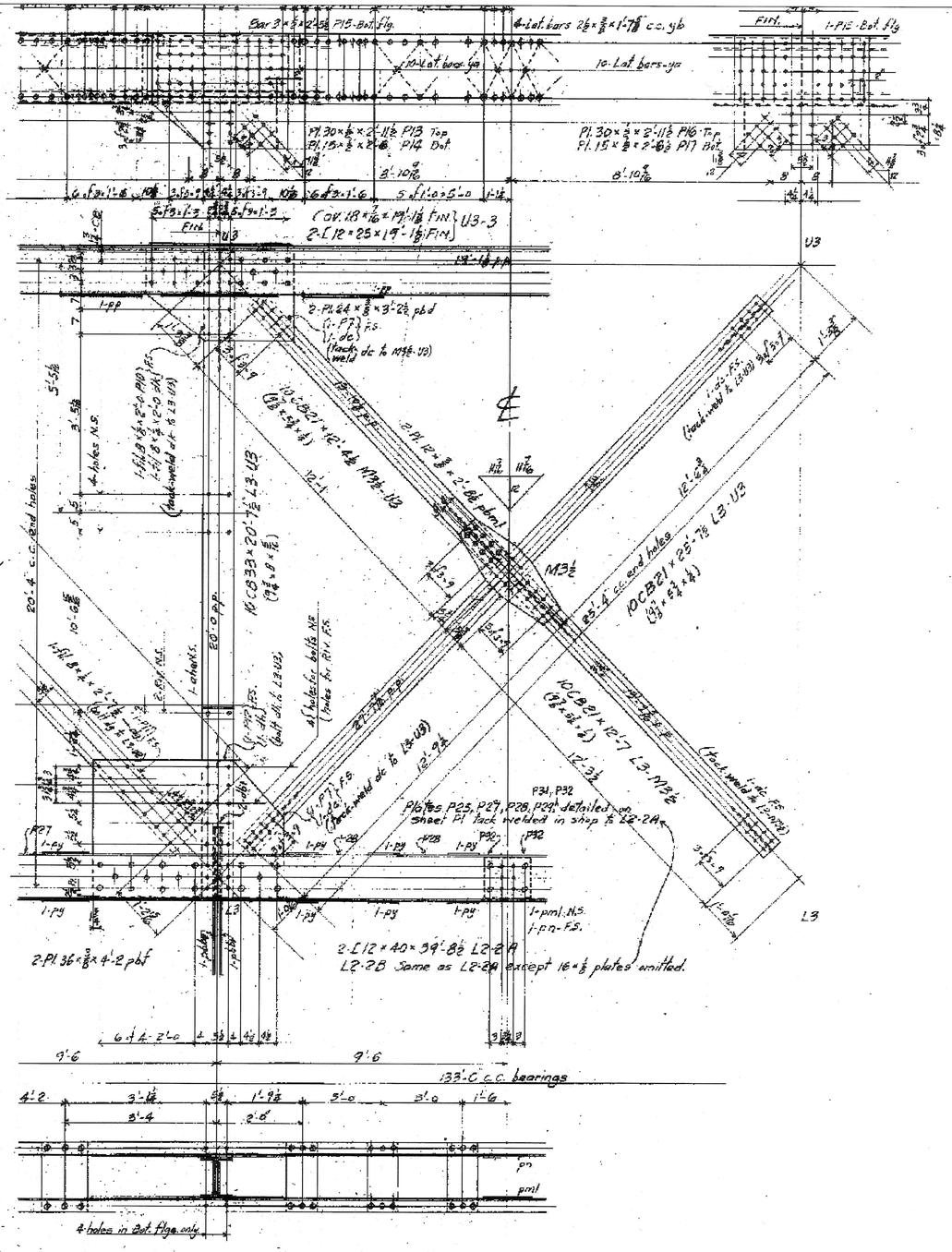

REQUIRED		
2	END POSTS	EP1R
2	"	EP1L
2	TOP CHORD	U1-3R
2	"	U1-3L
2	"	U3-3
1	BOT. "	L0-2A
1	" "	L0-2AX
1	" "	L0-2B
1	" "	L0-2BX
1	" "	L2-2A
1	" "	L2-2B
4	VERTICALS	L1-U1
4	"	L2-U2
4	"	L3-U3
4	DIAGONALS	L2-U1
4	"	L3-U2
2	"	L3-U3
2	"	M3½-U3
2	"	L3-M3½
12	PLATES	P7
8	"	P8
4	"	P9
4	"	P10
8	"	P11
8	"	P12
2	"	P13
2	"	P14
4	"	P15
2	"	P16
2	"	P17
32	"	P30
24	HUB GUARD POSTS	HG-1B

POWNAL
BRZ 1441(19) C/2
REFERENCE SHEET 8 OF 18
SHEET 98 OF 108

STATE OF VERMONT
VILLAGE BRIDGE, NORTH POWNAL
STATE FLOOD PROJECT 1-B
TRUSSES

AMERICAN BRIDGE COMPANY

DRAWINGS MADE AT Elmira PLANT
WORK FABRICATED AT Elmira PLANT
IN CHARGE OF Maloney
DRAW. MADE BY C.M.N. DATE 7-21-39
DRAW. CHECKED BY S.K. DATE 7-21-39

ORDER No. H2683T
SHEET No. 1A

NOTES:-
Rivets ⅞"
Holes 15/16"
Paint - Yes
Surfaces riveted in contact in shop or field-Yes.

Rev. 8-10-39
Loose fillers welded.
C.M.N.

SHOP BILL S [redacted]

POWNAL
BRZ 1441(19) C/2
REFERENCE SHEET 9 OF 18
SHEET 99 OF 108

STATE OF VERMONT
VILLAGE BRIDGE, NORTH POWNAL
STATE FLOOD PROJECT I-B
TRUSSES

AMERICAN BRIDGE COMPANY

DRAWINGS MADE AT Elmira PLANT
WORK FABRICATED AT Elmira PLANT
IN CHARGE OF Maloney
DRAWN BY C.M.N. DATE 7-21-59

Rev. B-10-29
Changed top flg. at U1
Welded loose fillers

REQUIRED		
8	KNEE BRACES	K1
5	TOP LATERALS	T1
6	" "	T2
4	TOP STRUTS	T31
8	PLATES	P1
2	"	P12
4	KNEE BRACES	K2
3	TOP LATERALS	T3
4	" "	T4
2	TOP STRUTS	T32
4	PLATES	P3
2	"	P4
16	SHIMS	P41
10	SHIMS	P42

POWNAL
BRZ 1441(19) C/2
REFERENCE SHEET 10 OF 18
SHEET 100 OF 108

Notes
Rivets ⅞" ϕ Holes 1⅛"
Surfaces riveted in contact in shop or field - Yes
Paint - Yes

Rev. P225-38
Added Holes in Bott. Flg. T32
" Fil. pb " P41, P42

STATE OF VERMONT
VILLAGE BRIDGE, NORTH POWNAL
STATE FLOOD PROJECT 18
TOP LATERALS

AMERICAN BRIDGE COMPANY
DRAWING MADE AT ELMIRA PLANT
WORK FABRICATED AT ELMIRA PLANT
IN CHARGE OF MALONEY
DRAW. MADE BY J.G.D. DATE 7/13/39
DRAW. CHECKED BY H.W. DATE 7-14-39

ORDER No. H2683S
SHEET No. 2

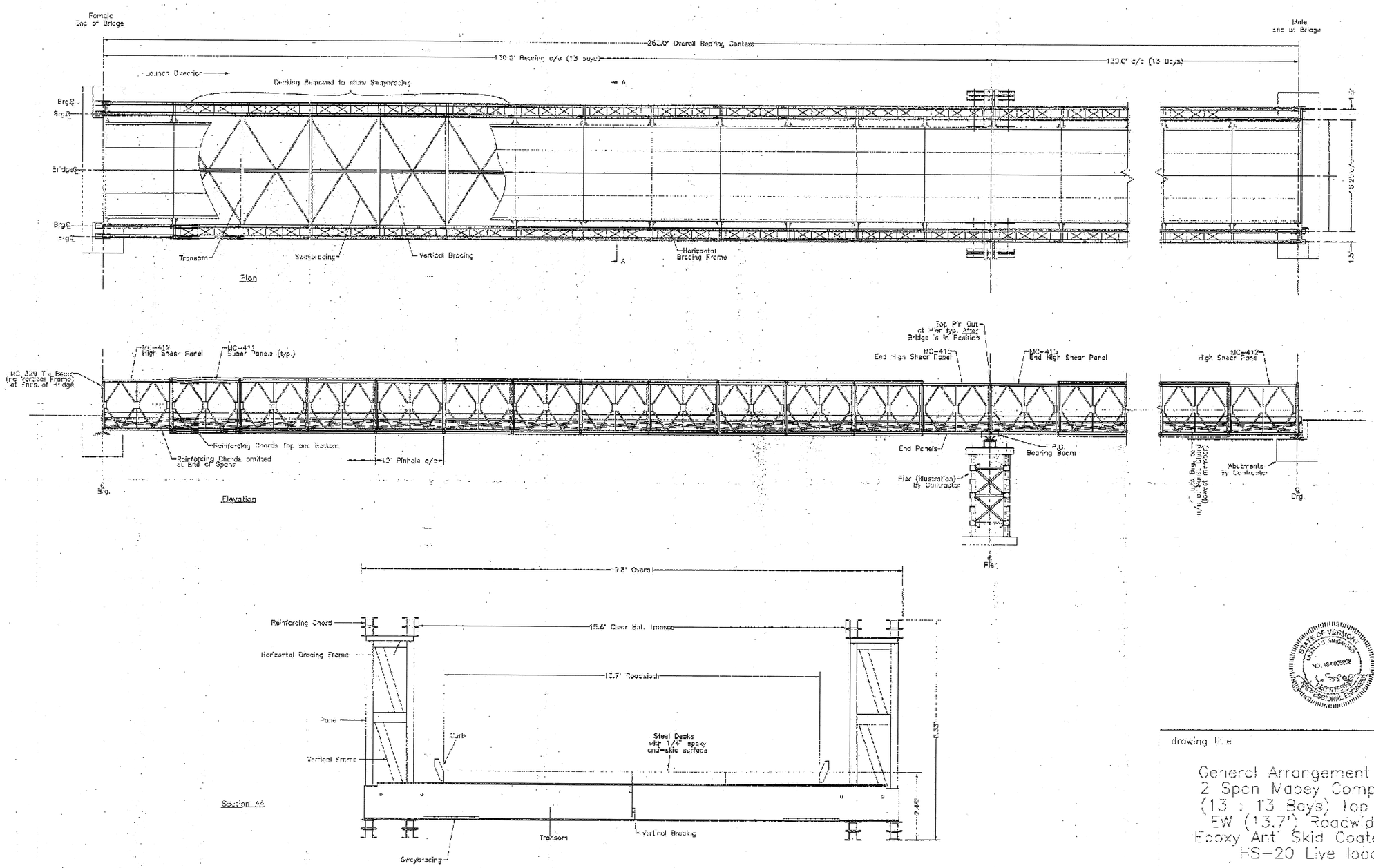

POWNAL
BRZ 1441(19).C/2
REFERENCE SHEET 12 OF 18
SHEET 102 OF 108

drawing title

General Arrangement Showing 2 Span Mabey Compact 200 (13 : 13 Bays) Top Pin Out EW (13.7') Roadwidth with Epoxy Anti Skid Coated Decks HS-20 Live loading

client	Petricca		
Dwg. no.	cmb\67\24-01	File	cmb\67\24-01.dwg
drawn by	[signature]	date 4/25/97	enquiry no. EMB 165/67
chk'd by	[signature]	date 4/25/97	order no. OMB 24/67
revision		sheet 1 of 2	scale do not scale

Rev.	by	date	details

MABEY BRIDGE AND SHORE INC 6770 DORSEY RD. BALTIMORE, MD. 21227 TEL : 410 379 2800 FAX : 410 379 2801

MABEY BRIDGE & SHORE INC TEL 410-379 2800 FAX 410-379-2801

PROPOSED IMPROVEMENT
BRIDGE PROJECT

PREPARED FOR

PETRICCA CONSTRUCTION CO.

MAY 1997

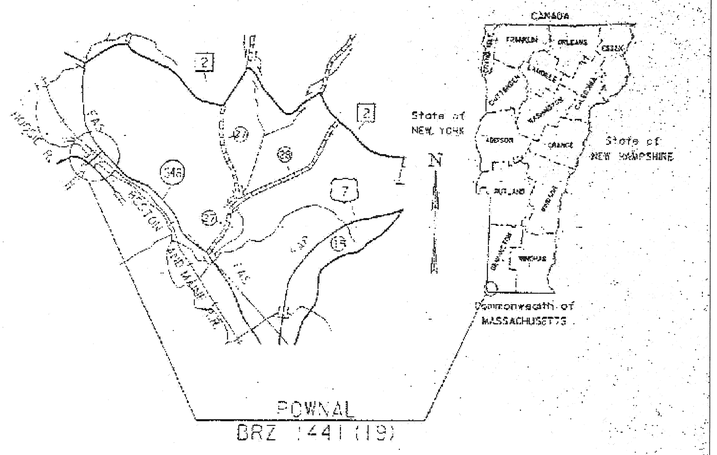

LOCUS PLAN

TOWN OF POWNAL
COUNTY OF BENNINGTON
ROUTE NO: TH 24.CL3
BRIDGE NO. : 41

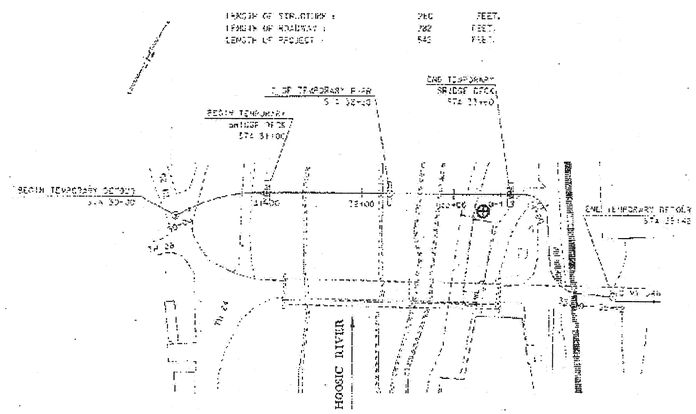

SITE PLAN

RECEIVED
JUN 30 1997

RECEIVED
JUL 02 1997

POWNAL
BRZ 1441(19) C/2
REFERENCE SHEET 13 OF 18
SHEET 103 OF 108

LIST OF DRAWINGS:

DWG NO	TITLE
1	TITLE SHEET
2	TEMPORARY BRIDGE LAYOUT SHEET
3	SOIL BORINGS & GENERAL NOTES
4	BRIDGE PLAN & PROFILE
5	FOOTING DETAILS
6	STEEL DETAILS
7	GEOMETRIC ABUTMENT LAYOUT FOR MABEY BRIDGE

REVISIONS: 6/8/97

Design Group, Inc.
Civil Engineers * Surveyors * Consultants

POWNAL TEMPORARY BRIDGE
OVER
HOOSAC RIVER
PREPARED FOR:
PETRICCA CONSTRUCTION CORP.
POWNAL, VERMONT

DWG NO. 1 OF 7

TITLE SHEET

PROJECT NO.	DRAWN BY:	DATE:	SCALE:
970040	JMS	MAY, 1997	N/A
		DESIGNED BY: JMS	APPROVED BY: JPS

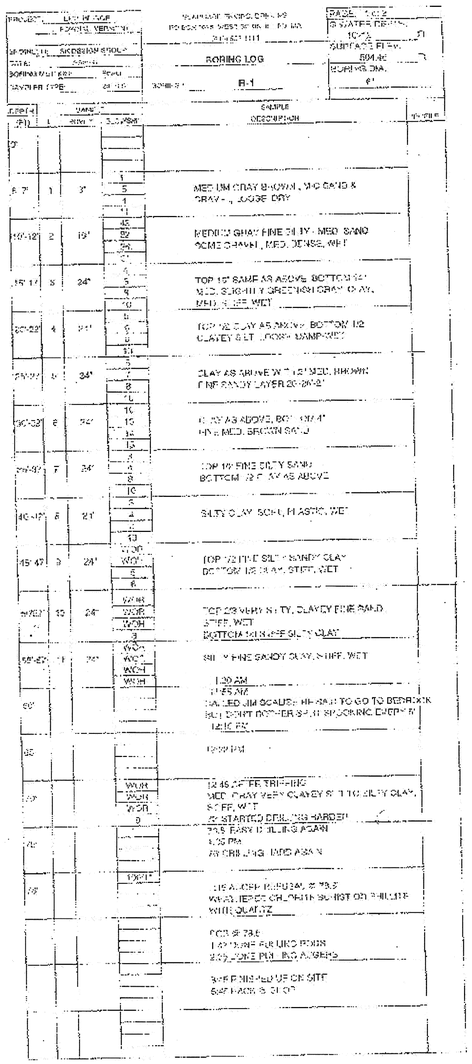

EXISTING CONDITIONS
DIMENSIONS AND DETAILS SHOWN FOR THE EXISTING STRUCTURES ARE NOT GUARANTEED. THE CONTRACTOR SHALL DETERMINE AND ESTABLISH ALL DIMENSIONS AND DETAILS NECESSARY FOR COMPLETION OF ALL WORK BY FIELD MEASUREMENTS AND SURVEY. THE CONTRACTOR SHALL BE RESPONSIBLE FOR THE ADEQUACY AND ACCURACY THEREOF, AND SHALL NOT ORDER ANY MATERIAL OR COMMENCE ANY FABRICATION UNTIL HE HAS MADE THE REQUIRED MEASUREMENTS AND THE EXTENT OF THE PROPOSED WORK HAS BEEN APPROVED BY THE ENGINEER.

STRUCTURAL STEEL & WELDING:
ALL STRUCTURAL STEEL SHALL CONFORM TO THE REQUIREMENTS OF ASTM A709 GR36, EXCEPT AS NOTED. ALL WELDING AND THE PREPARATION AND ASSEMBLY OF MATERIALS FOR WELDING SHALL CONFORM TO THE STANDARD SPECIFICATION FOR HIGHWAYS AND BRIDGES, THE AASHTO STANDARD SPECIFICATIONS FOR HIGHWAY BRIDGES. WELDED FABRICATION SHALL BE IN ACCORDANCE WITH THE AASHTO/AWS BRIDGE WELDING CODE (ANSI/AASHTO/AWS D1.5 BRIDGE WELDING CODE) AND ALL INTERIM REVISIONS PUBLISHED BY AASHTO AS OF THE BID OPENING DATE.

ANCHOR BOLTS:
ALL ANCHOR BOLTS SHALL BE SET BY TEMPLATE BEFORE THE CONCRETE IS SET

REINFORCEMENT:
ALL BARS SHALL BE DEFORMED BARS CONFORMING TO THE REQUIREMENTS OF AASHTO M31. ALL #6 BARS SHALL BE LAPPED 31". FOR HORIZONTAL BARS WITH 12" OR MORE OF CONCRETE BELOW THE BAR, THE LAP LENGTHS SHALL BE 48" FOR #6 BARS. IF THE ABOVE BARS ARE SPACED 6" OR MORE ON CENTER, LAP LENGTHS SHALL BE 80% OF THE LAP LENGTH GIVEN ABOVE. ALL OTHER BARS SHALL BE LAPPED AS SHOWN ON PLANS.

UNSUITABLE MATERIAL:
ALL UNSUITABLE MATERIAL SHALL BE REMOVED WITHIN THE LIMITS OF THE FOUNDATIONS OF THE STRUCTURE, AS DIRECTED BY THE ENGINEER.

WELDING NOTE:
ALL WELDING MUST BE PERFORMED BY CERTIFIED WELDERS, QUALIFIED FOR ALL POSITIONS, UTILIZING E70XX ELECTRODES. WELD PREPERATION MUST BE INSPECTED PRIOR TO FINAL WELDING.

POWNAL
BRZ 1441(19) C/2
REFERENCE SHEET 14 OF 18
SHEET 104 OF 108

Design Group, Inc.
Civil Engineers * Surveyors * Consultants

POWNAL TEMPORARY BRIDGE
OVER
HOOSIC RIVER
PREPARED FOR:
PETRICCA CONSTRUCTION CORP.
POWNAL, VERMONT

DATE: MAY 1997
SCALE: AS NOTED
DESIGNED BY:
APPROVED BY:
PROJECT NO.
DRAWN BY:

SOIL BORINGS & NOTES

DWG. NO. 3
OF 7

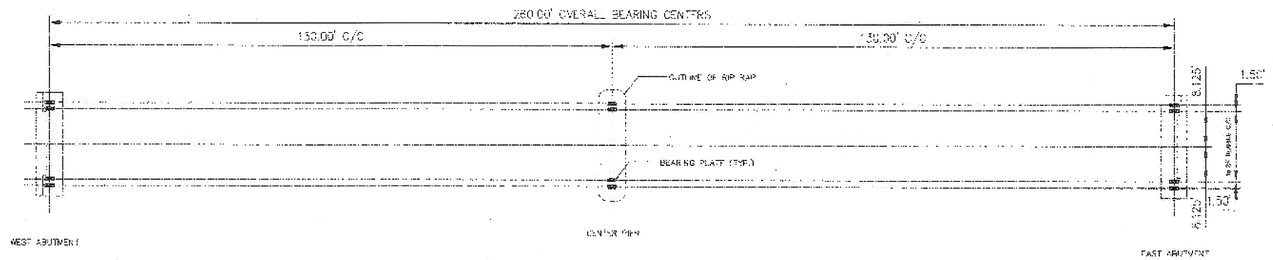

PLAN

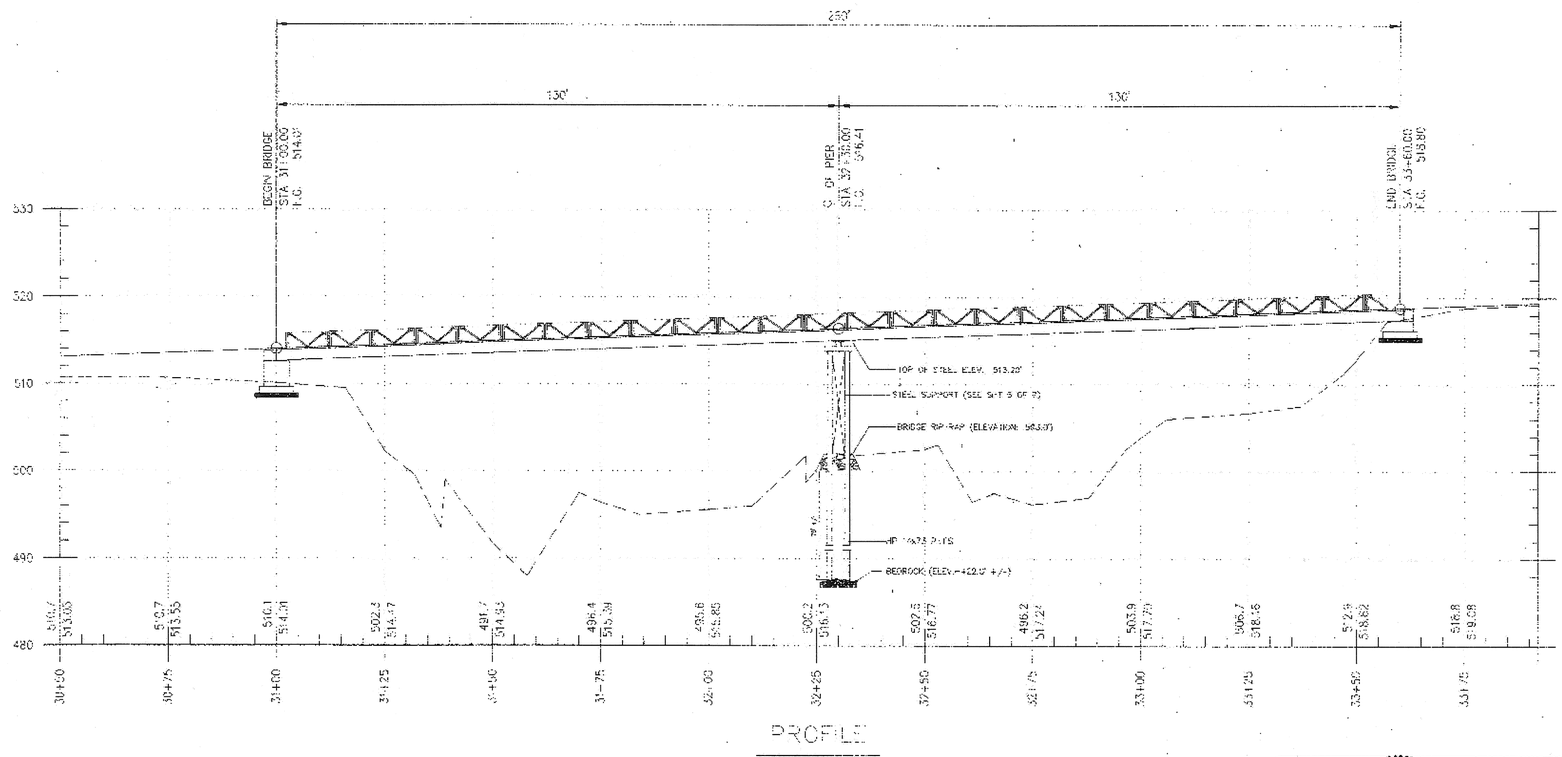

PROFILE

POWNAL
BRZ 1441(19) C/2
REFERENCE SHEET 15 OF 18
SHEET 105 OF 108

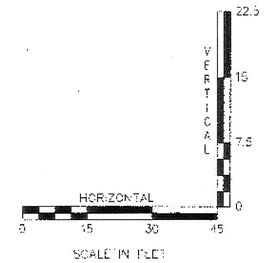

REVISIONS: 6/25/97	PROJECT NO. 970040	DRAWN BY: JMS	Design Group, Inc. Civil Engineers * Surveyors * Consultants	POWNAL TEMPORARY BRIDGE OVER HOOSIC RIVER
			DATE: MAY 1997	SCALE: AS NOTED
			DESIGNED BY: JPS	APPROVED BY: JPS

PREPARED FOR: PETRICCA CONSTRUCTION CORP. POWNAL, VERMONT

PLAN & PROFILE

DWG. NO. 4 OF 7

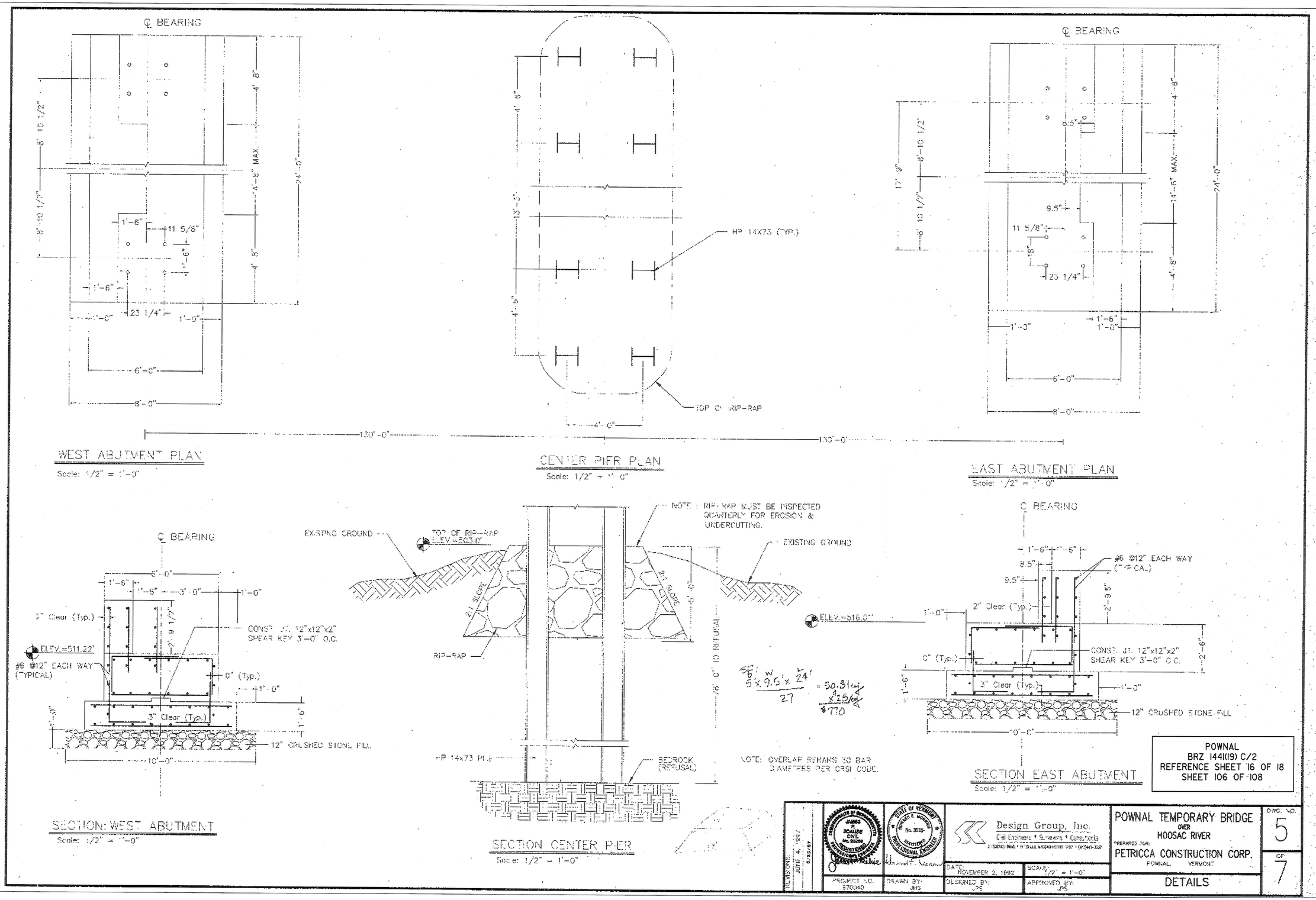

SF: $\frac{5' \times 9.5' \times 24'}{27} = 50.81$ cy $\times 25$ cy $\$770$

POWNAL
BRZ 1441(19) C/2
REFERENCE SHEET 16 OF 18
SHEET 106 OF 108

REVISIONS: JUNE 4, 1997 6/25/97	JAMES R. SCALISE CIVIL No. 20259 REGISTERED PROFESSIONAL ENGINEER	STATE OF VERMONT HOWARD F. MORRIS No. 3035 REGISTERED PROFESSIONAL ENGINEER	Design Group, Inc. Civil Engineers • Surveyors • Consultants	POWNAL TEMPORARY BRIDGE OVER HOOSAC RIVER
			DATE: NOVEMBER 2, 1992	SCALE: 1/2" = 1'-0"
PROJECT NO. 970040	DRAWN BY: JMS	DESIGNED BY: JPS	APPROVED BY: JPS	DETAILS

DWG. NO. 5 OF 7

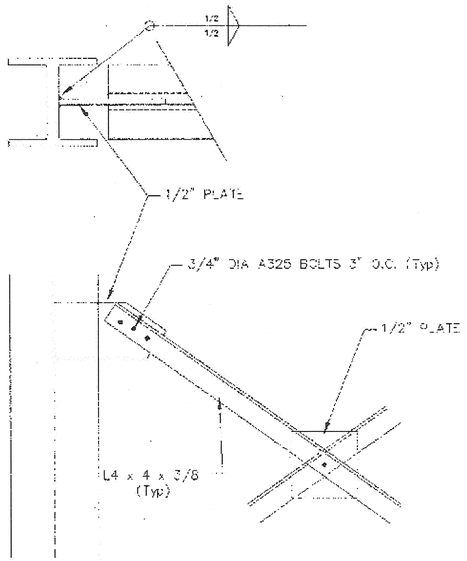

X-BRACING CONNECTION DETAIL

N.T.S.

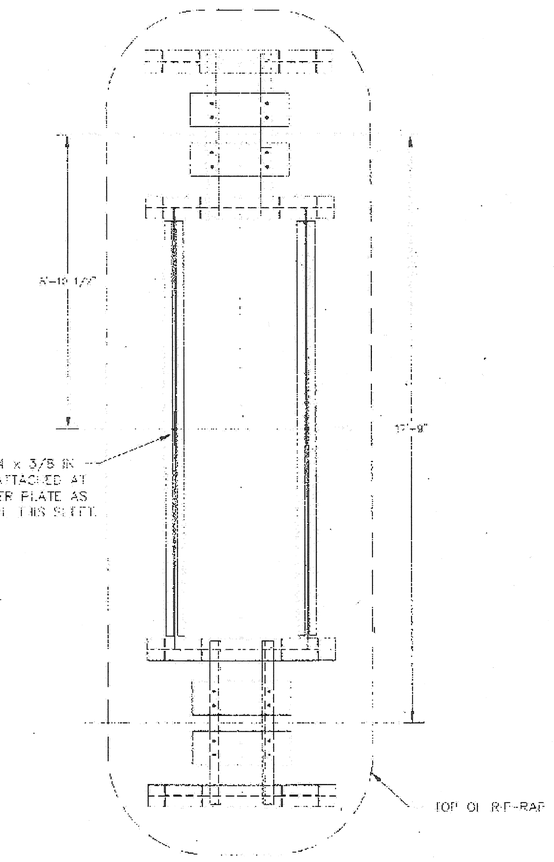

CENTER PIER ABUTMENT PLAN

SCALE: 1/2" = 1'-0"

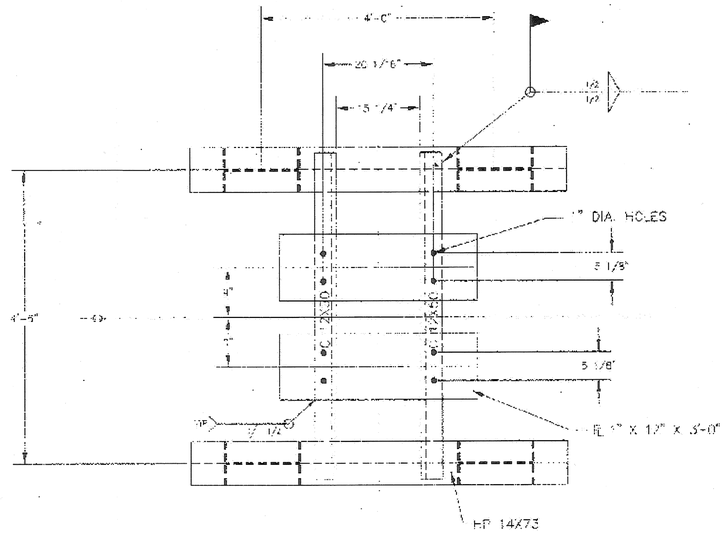

CENTER PIER STRUCTURAL SUPPORT DETAIL

SCALE: 1" = 1'-0"

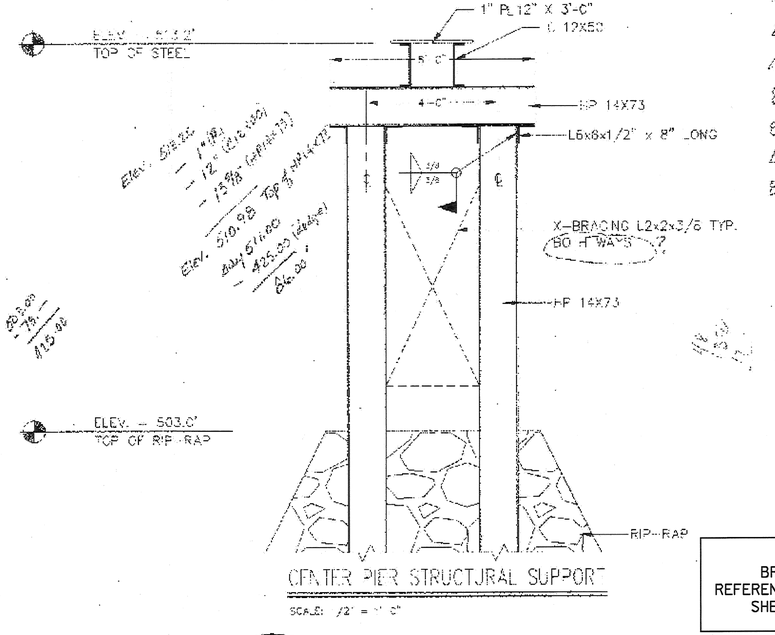

CENTER PIER STRUCTURAL SUPPORT

SCALE: 1/2" = 1'-0"

MATERIAL REQUIRED AS PER NEW DESIGN

4 ~ PL 1"x12"x3'-0" W's
4 ~ C12x50's x 5'-0"
4 ~ HP14x73's x 6'-0"
8 ~ HP14x73's x 20'-0"
8 ~ L6x4x½"x0'-8"
4 ~ L4x4x3/8" x 15.4
8 ~ L2x2x3/8" x 6.75"

NOTE:
STRUCTURAL STEEL SHALL BE PREPARED, PRIMED AND FINISH PAINTED IN STRICT CONFORMANCE WITH THE "AASHTO", 16TH EDITION / SECTION 13

POWNAL
BRZ 144(19) C/2
REFERENCE SHEET 17 OF 18
SHEET 107 OF 108

REVISIONS
JAN 7, 1997 6:25 AM

JAMES H. SCALLINE No. 8120 REGISTERED PROFESSIONAL ENGINEER COMMONWEALTH OF MASSACHUSETTS

EDWARD F. MONNIER No. 3035 REGISTERED PROFESSIONAL ENGINEER STATE OF VERMONT

Design Group, Inc.
Civil Engineers * Surveyors * Consultants
2 FRENCH DRIVE * PITTSFIELD, MASSACHUSETTS 01201 * (413)447-7331

POWNAL TEMPORARY BRIDGE
OVER
HOOSAC RIVER
PREPARED FOR:
PETRICCA CONSTRUCTION CORP.
POWNAL VERMONT

STEEL DETAILS

PROJECT NO. 970340	DRAWN BY: JWS	DATE: MAY, 1997	SCALE: AS NOTED
		DESIGNED BY: JPS	APPROVED BY: JPS

DWG. NO. 6 OF 7

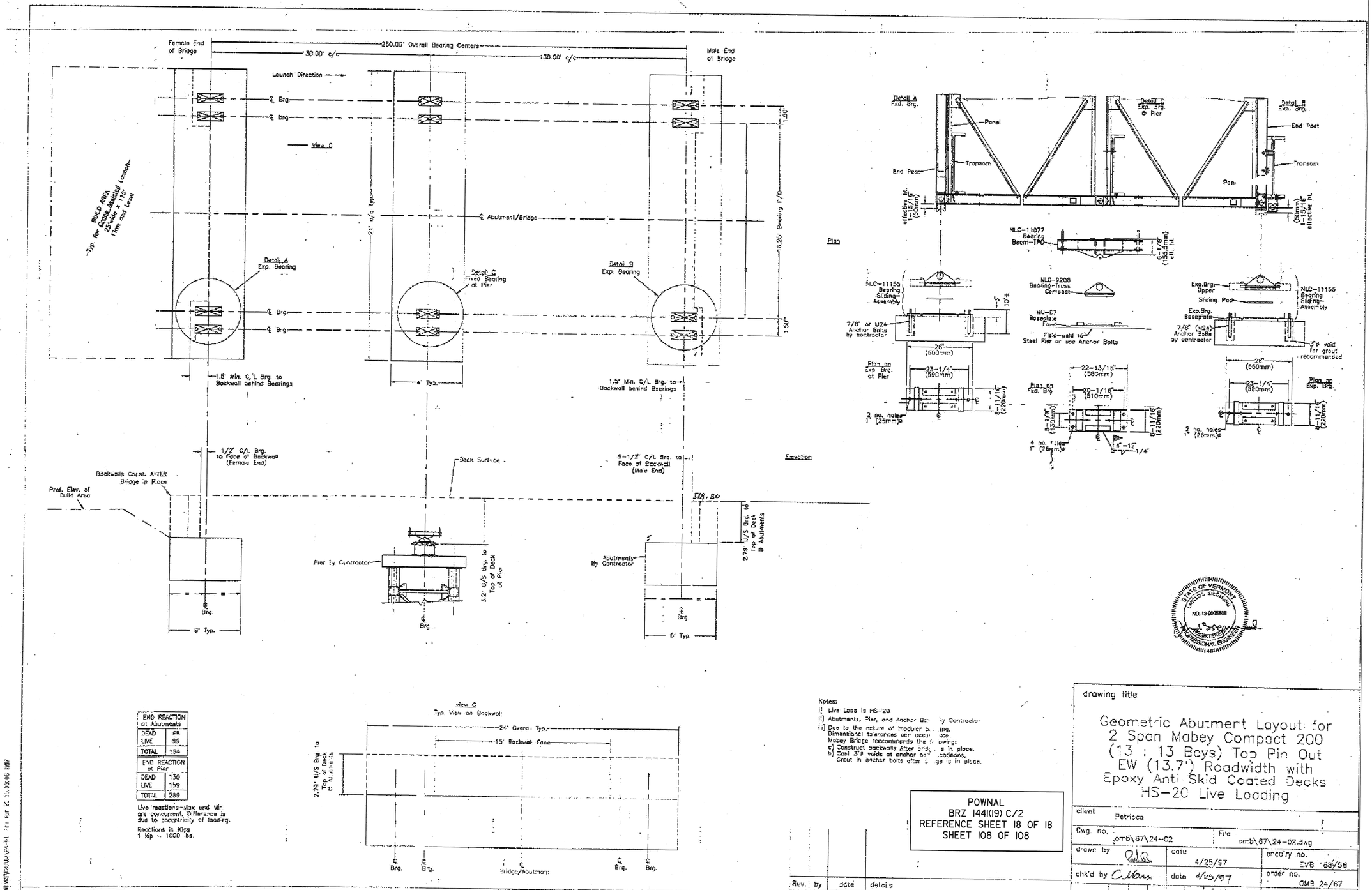

END REACTION at Abutments	
DEAD	65
LIVE	99
TOTAL	184
END REACTION at Pier	
DEAD	130
LIVE	159
TOTAL	289

Live reactions-Max and Min are concurrent. Difference is due to eccentricity of loading.

Reactions in Kips
1 kip = 1000 lbs.

Notes:
i) Live Load is HS-20
ii) Abutments, Pier, and Anchor Bolts by Contractor
iii) Due to the nature of modular bearing. Dimensional tolerances can occur. Mabey Bridge recommends the following:
a) Construct backwalls after bridge is in place.
b) Cast 3"ø voids at anchor bolt locations. Grout in anchor bolts after bridge is in place.

POWNAL
BRZ 1441(19) C/2
REFERENCE SHEET 18 OF 18
SHEET 108 OF 108

Rev.	by	date	details

drawing title

Geometric Abutment Layout for 2 Span Mabey Compact 200 (13 : 13 Bays) Top Pin Out EW (13.7') Roadwidth with Epoxy Anti Skid Coated Decks HS-20 Live Loading

client	Petrioca		
Dwg. no.	omb\67\24-02	File	omb\67\24-02.dwg
drawn by	[illegible]	date 4/25/97	enquiry no. EVB 186/56
chk'd by	C. Marx	date 4/29/97	order no. OMB 24/67
revision		sheet 2 of 2	scale do not scale

MABEY BRIDGE & SHORE INC TEL 410-379-2800 FAX 410-379-2801

MABEY MABEY BRIDGE AND SHORE INC

6770 DORSEY RD. BALTIMORE, MD. 21227 TEL : 410 379 2800 FAX : 410 379 2801

PLATE 3-TUNNEL CROSS SECTION-TUNNEL LINE
HIGHWAY AGENCY VIO SHEET
NATIONAL HIGHWAY
PRINTED IN U.S.A.

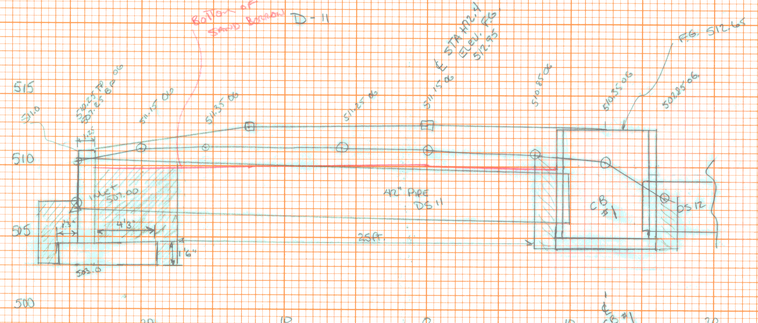

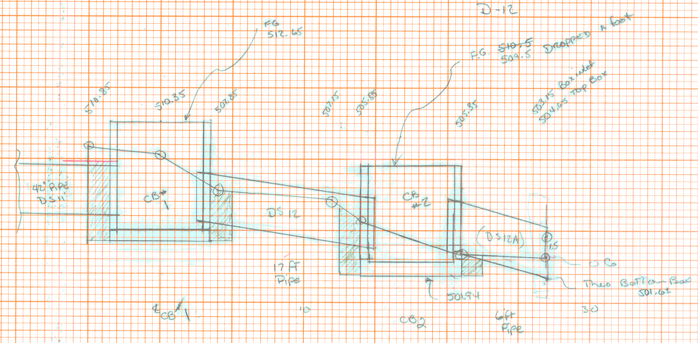
D-12
Elev. 512.65
510.35
508.85
505.85
505.85
505

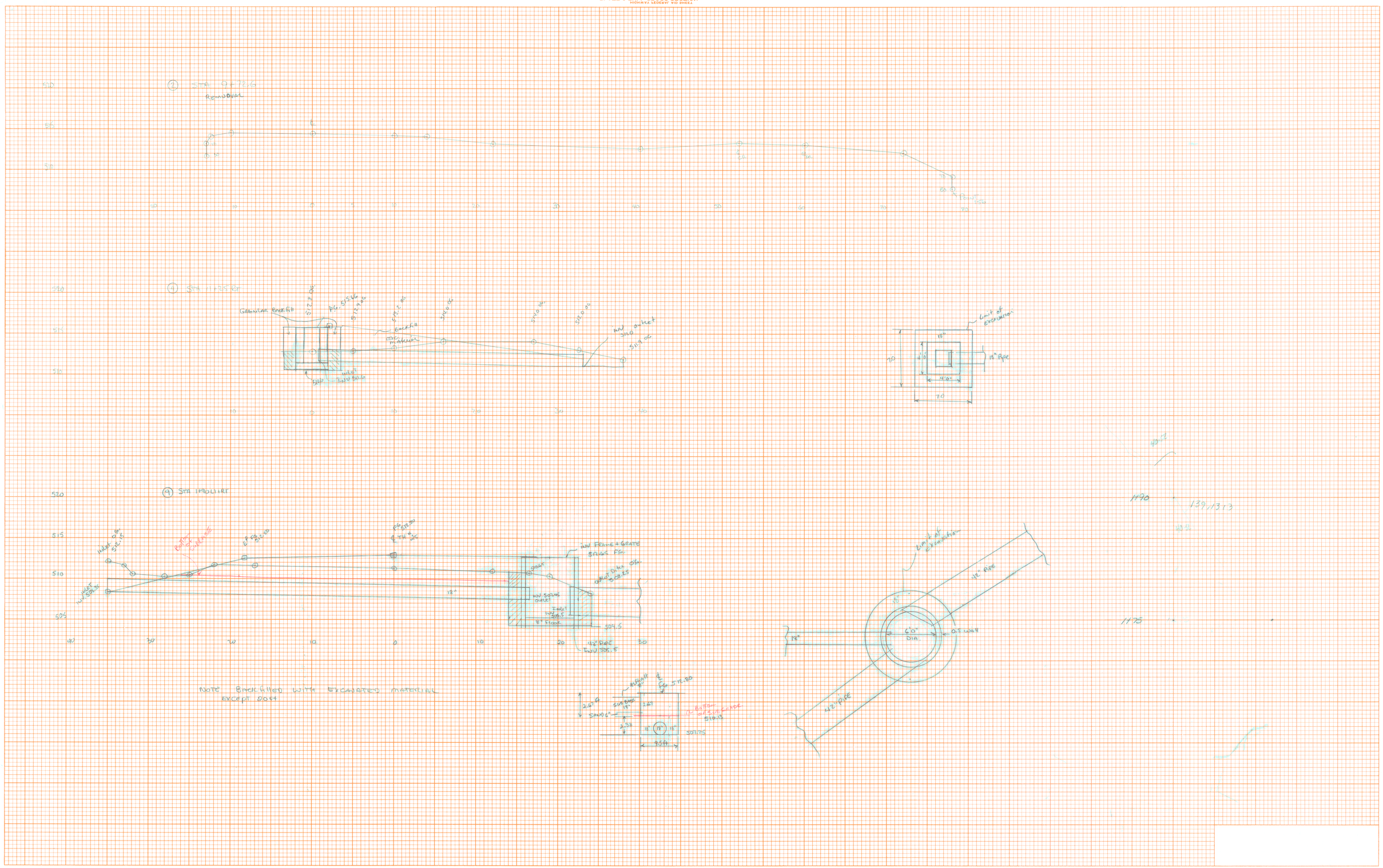

② STA 9+72.6
REMOVAL
④ STA 11+25 RT
Granular Backfill
Backfill
Exc. Material
Inlet
Inv 511.6
Inv 511.0 outlet
511.9 OG
Limit of Excavation
18" Pipe
7.0
4'0"
⑨ STA 14+90 LT RT
Inlet OG 512.15
Bottom of Subbase
Inv Frame + Grate 512.65 FG
Outlet Ditch OG 508.25
Inlet Inv 508.35
Inv 502.45 Outlet
Inlet Inv 505.5
8" Floor
509.5
42" Pipe Inv 505.5
Limit of Excavation
42" Pipe
6'0" DIA.
0.5 Wall
18"
Note Backfilled with Excavated Material
Except 20 ft
Asphalt 8"
Sub Base 18"
Sand 6"
Bottom of Sub Grade 510.13
507.75
9.5 ft
1190
1175
139,1313

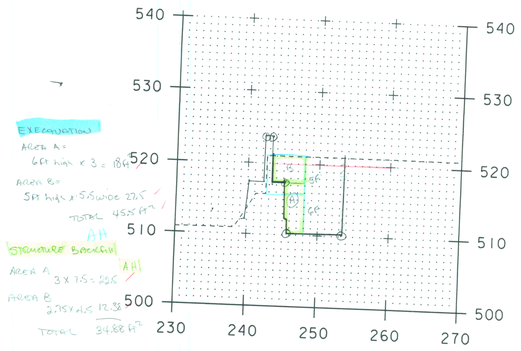

4+88.4

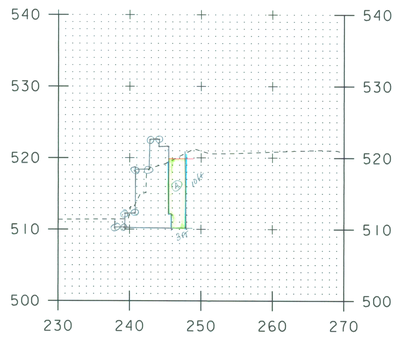

5+17.1

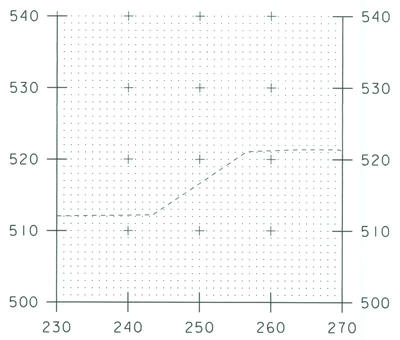

5+30.5

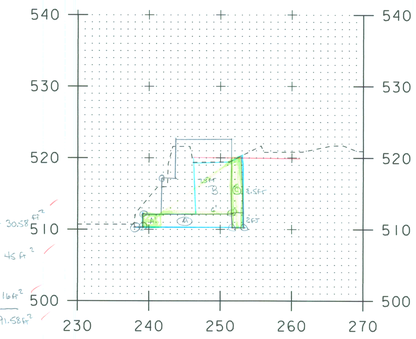

4+80.9

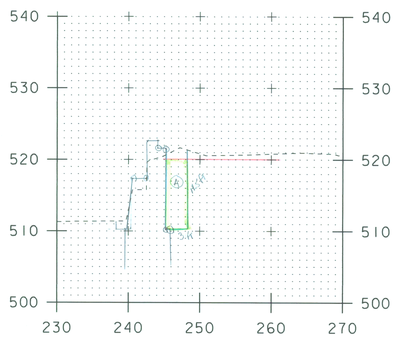

5+14.8

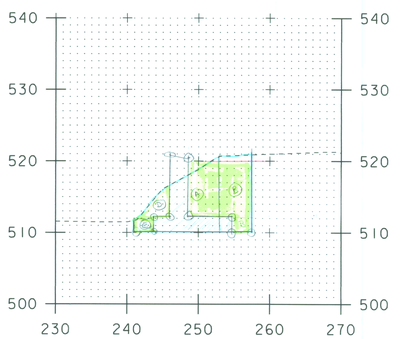

5+23

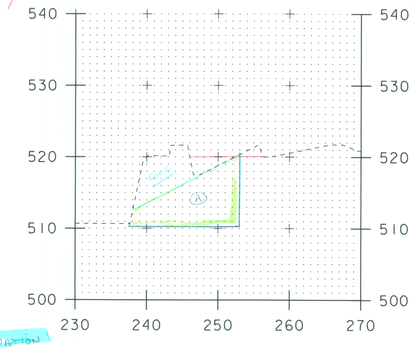

4+78

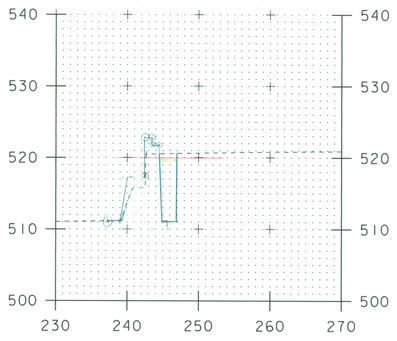

5+04.8

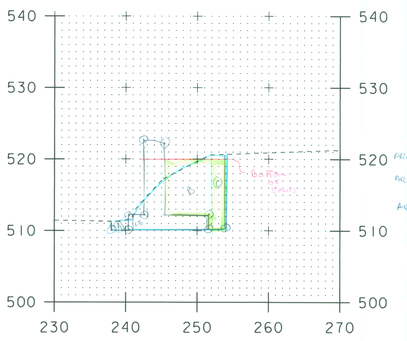

5+20.6

SCALE 1" = 10'-0

10 0 10

ABUTMENT NO. 2

PROJECT NAME:	POWNAL
PROJECT NUMBER:	BRZ 1441(19) C/2

FILE NAME: /87e045/str/se045xs2.dgn		PLOT DATE:	11-AUG-2008
PROJECT LEADER:	R. WHITCOMB	DRAWN BY:	STR3
DESIGNED BY:	C. CARLSON	CHECKED BY:	C. CARLSON
		SHEET	OF

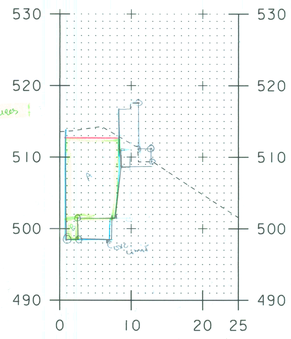

4+81.6 (5H)

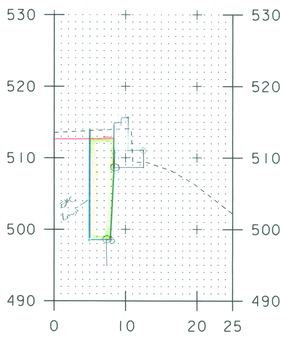

5+04.1 (5O)

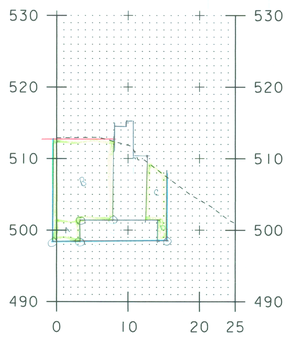

5+16.3 (5A)

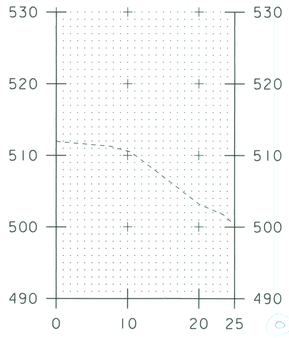

5+26 (5W)

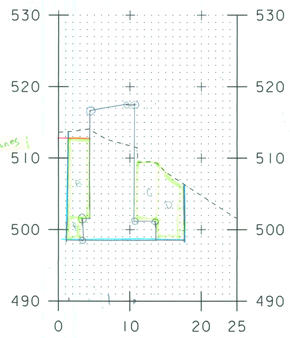

4+80.3 (5G)



4+87.5 (5Q)

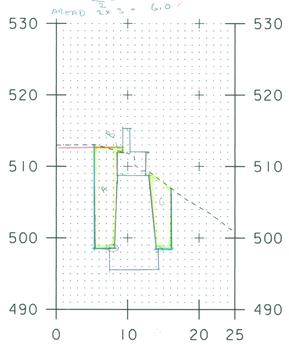

5+15.7 (5A)

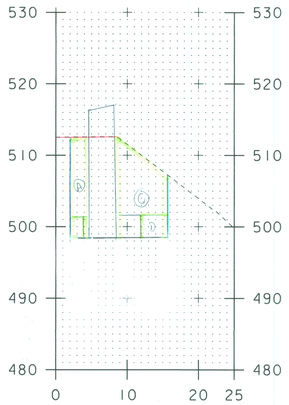

5+20.8 (5A)

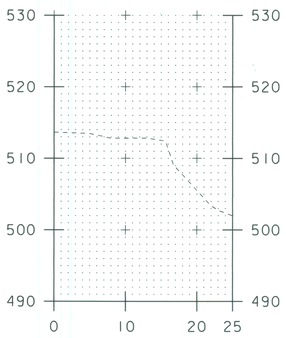

4+74.2 (5R)



4+83.9 (5B)

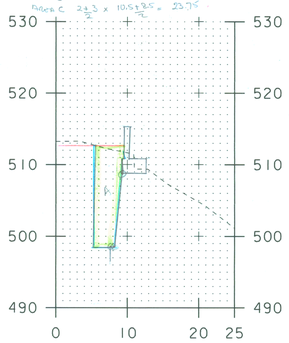

5+12.7 (5A)

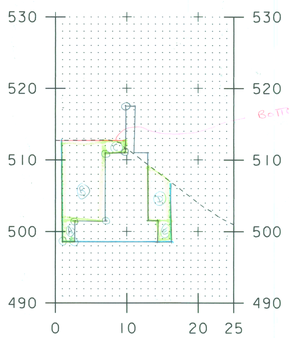

5+18.6 (5S)

SCALE 1" = 10'-0
10 0 10

ABUTMENT NO. 1

PROJECT NAME:	POWNAL
PROJECT NUMBER:	BRZ 1441(19) C/2
FILE NAME: /87e045/str/se045xs2.dgn	PLOT DATE: 11-AUG-2008
PROJECT LEADER: R. WHITCOMB	DRAWN BY: STR3
DESIGNED BY: C. CARLSON	CHECKED BY: C. CARLSON
	SHEET OF

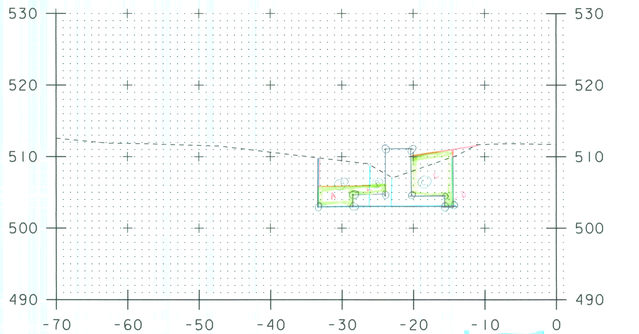

Granular Backfill
A 3 x 5 = 15 ft²
B 1.3 x 4.5 = 5.85 ft²
C 5.5 + 6.5 / 2 x 6 = 36.0 ft²
D 1.5 x 1.5 = 2.25 ft²
TOTAL 59.1 ft²

7+18.7 (307)

EXCAVATION
A 7+6 / 2 x 7 = 45.5 ft²
B 6+4 / 2 x 3 = 15.0 ft²
C 4+7 / 2 x 8.5 = 46.75 ft²
TOTAL = 107.25 ft²

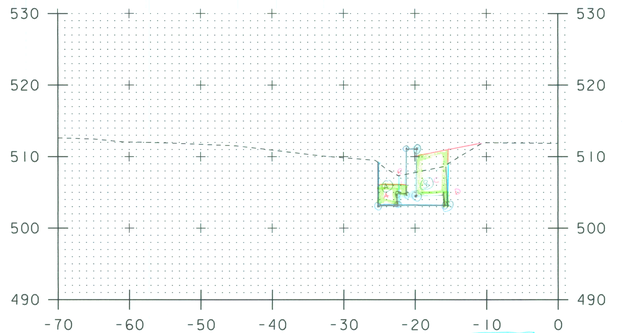

Granular Backfill
A 2.5 x 3 = 7.5 ft²
B 1.5 x 1 = 1.5 ft²
C 5.5 + 6.5 / 2 x 4.5 = 27.0 ft²
D 1.5 x .5 = .75 ft²
TOTAL 36.75 ft²

7+25.1 (306)

EXCAVATION
A 6+11.3 / 2 x 3 = 15.45 ft²
B 11.3 + 5.8 / 2 x 7 = 35.35 ft²
TOTAL 50.80 ft²

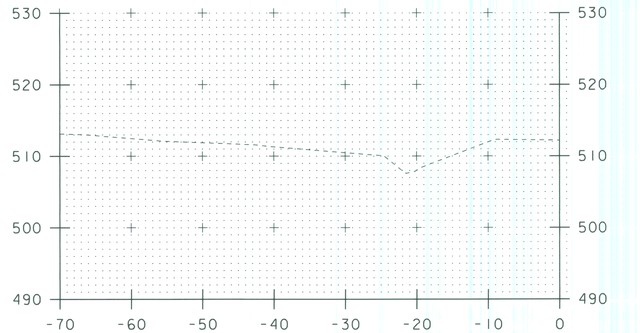

Granular Backfill 0

7+33.1 (305) ZERO

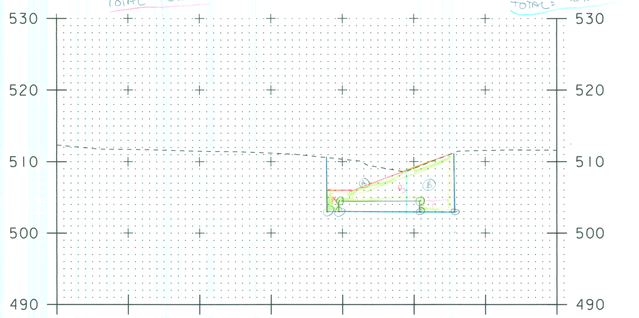

Granular Backfill
A (2 x 1.5) + (1.5 x 3) / 2 = 7.5 ft²
B 1.5 + 6.5 / 2 x 14 = 56.0 ft²
C 1.5 x 5 = 7.5 ft²
TOTAL 71 ft²

7+14.4 (301)

EXCAVATION
A 7.7 + 5.8 / 2 x 11 = 74.25 ft²
B 5.8 + 8 / 2 x 6.7 = 46.23 ft²
TOTAL 120.48 ft²

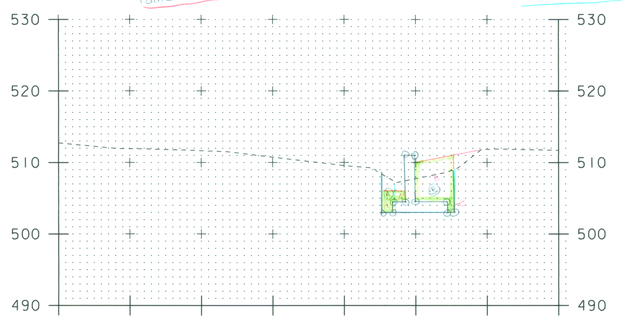

Granular Backfill
A 2 x 1.5 = 3.0 ft²
A' 1.5 x 3.5 = 5.25 ft²
B 5.5 + 6.5 / 2 x 5.5 = 33.0 ft²
C 1.5 x 1.5 = 2.25 ft²
TOTAL 43.5 ft²

7+21.5 (306)

EXCAVATION
A 5.5 + 4.2 / 2 x 2 = 9.7 ft²
B 4.2 + 6 / 2 x 8.5 = 43.35 ft²
TOTAL 53.05 ft²

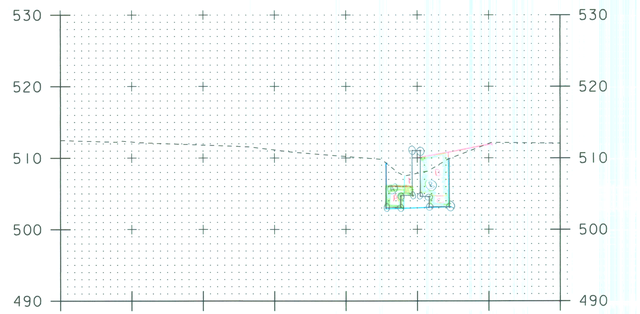

7+29.7 (303)

EXCAVATION
A 6.2 + 5.6 / 2 x 2.5 = 14.75 ft²
B 5.4 + 7 / 2 x 6.3 = 39.69 ft²
TOTAL 54.44 ft²

Granular Backfill
A 2 x 1.5 = 3.0 ft²
A' 1.5 x 3.5 = 5.25 ft²
B 5.5 + 6.5 / 2 x 4 = 24.00 ft²
C 1.5 x 3 = 4.50 ft²
TOTAL 36.75 ft²

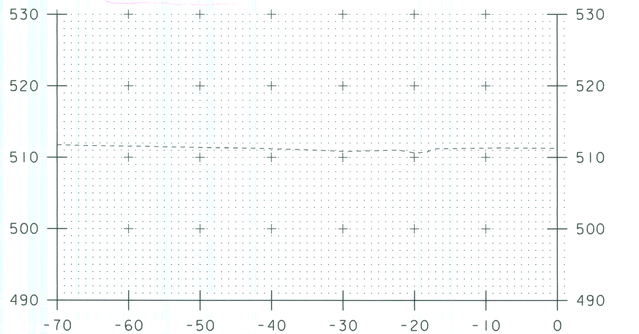

7+09.2 (PT 300) ZERO

Granular Backfill 0

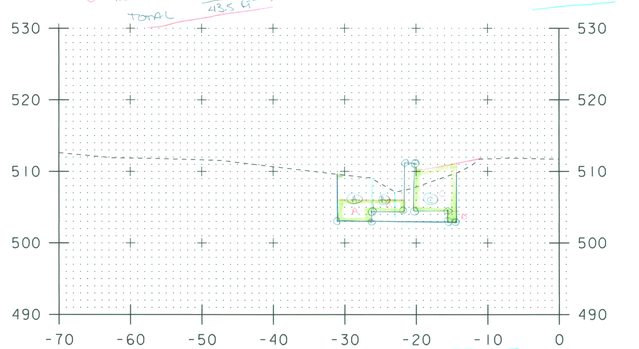

Headwall
— Excavation
— Finish Grade
Bottom of Sand or Slope Toe

7+19.4 (W8)

Granular Backfill
A 5 x 3 = 15.0 ft²
B 1.5 x 4 = 6.0 ft²
C 5.5 + 6.5 / 2 x 6 = 36.0 ft²
D 1.5 x 1.5 = 2.25 ft²
TOTAL 59.25 ft²

EXCAVATION
A 6.5 + 6 / 2 x 4.8 = 30.0 ft²
B 6 + 4.7 / 2 x 3 = 15.3 ft²
C 4.7 + 6.7 / 2 x 8.7 = 47.42 ft²
TOTAL 92.72 ft²

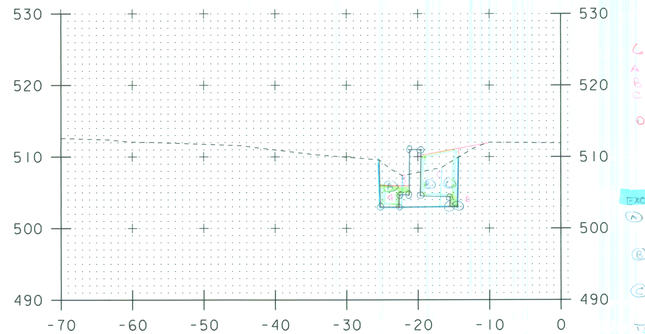

7+26.3 (304)

EXCAVATION
A 4.5 + 4.5 / 2 x 3 = 16.5 ft²
B 4.5 + 5.5 / 2 x 5.5 = 27.5 ft²
C 5.5 + 7 / 2 x 2.5 = 15.63 ft²
TOTAL 59.63 ft²

Granular Backfill
A 3 x 3 = 9 ft²
B 1.5 x 1 = 1.5 ft²
C 5.5 + 6.5 / 2 x 5 = 30.0 ft²
D 1 x 1.5 = 1.5 ft²
TOTAL 42 ft²

SCALE 1" = 10'-0
10 0 10

ROADWAY QUANTITIES

PROJECT NAME:	POWNAL
PROJECT NUMBER:	BRZ 1441(19) C/2
FILE NAME: /87e045/str/se045xs2.dgn	PLOT DATE: 07-AUG-2008
PROJECT LEADER: R. WHITCOMB	DRAWN BY: STR3
DESIGNED BY: C. CARLSON	CHECKED BY: C. CARLSON
	SHEET OF

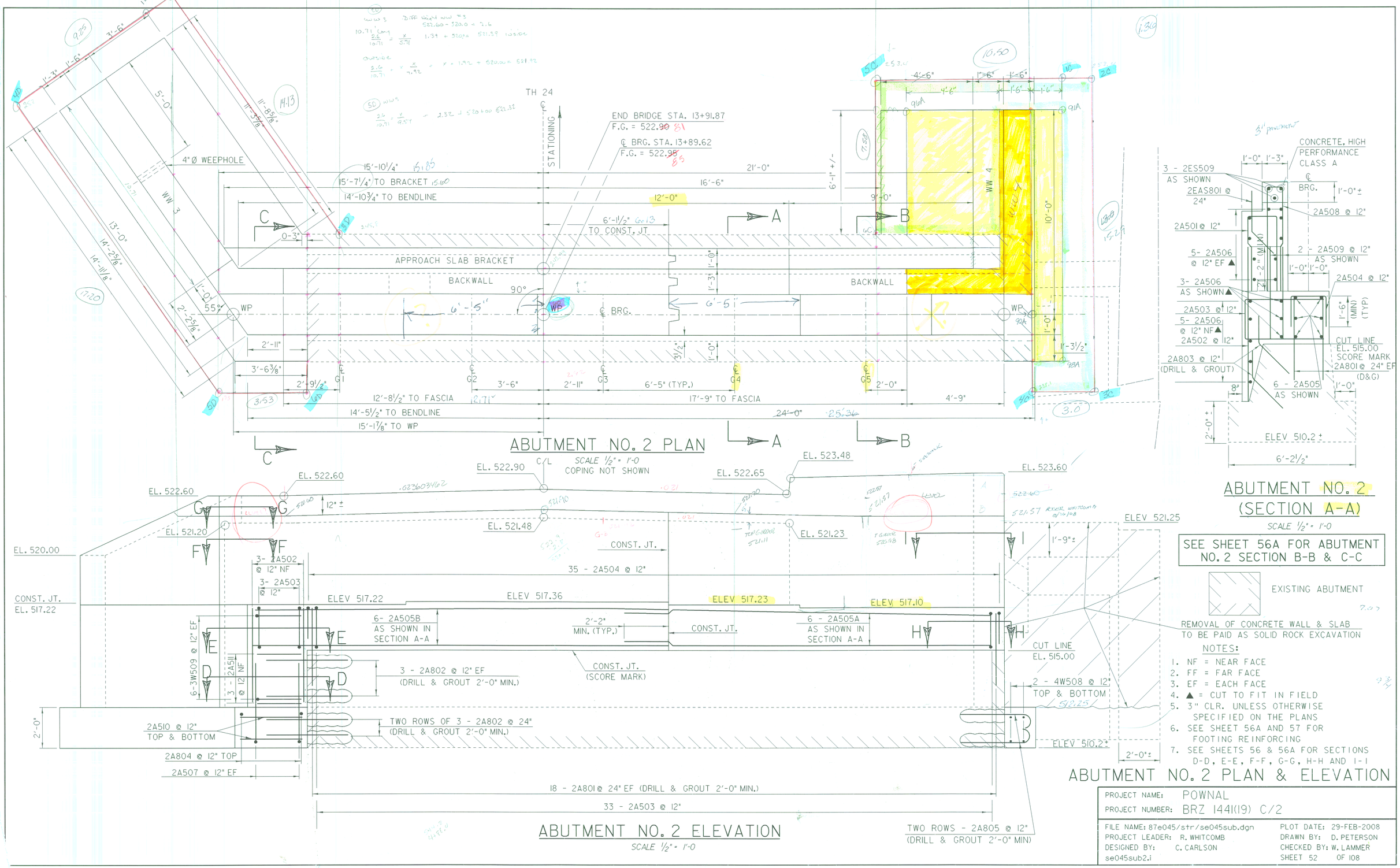

PROJECT NAME:	POWNAL
PROJECT NUMBER:	BRZ 1441(19) C/2
FILE NAME: 87e045/str/se045sub.dgn	PLOT DATE: 29-FEB-2008
PROJECT LEADER: R. WHITCOMB	DRAWN BY: D. PETERSON
DESIGNED BY: C. CARLSON	CHECKED BY: W. LAMMER
se045sub2.i	SHEET 52 OF 108

REV.	BY	DATE	DESCRIPTION
1	LBB	4/21/08	REVISED BRIDGE SEAT ELEVATIONS
2	LBB	4/21/08	REVISED DIMENSION OF FOOTING ON WW2
3	CWC	5/22/08	REVISED WW 1 & WW 2 ELEVATIONS
4	CWC	7/01/08	EXISTING BOTTOM OF FOOTING ELEVATION REVISED

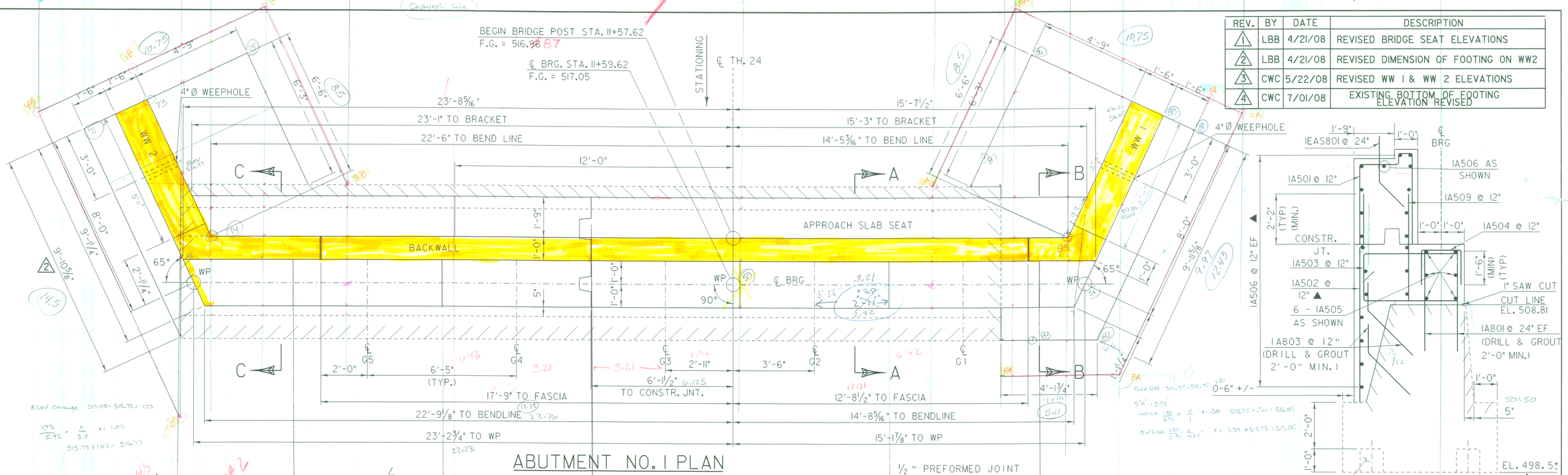

ABUTMENT NO. 1 PLAN

SCALE 1/2" = 1'-0
COPING NOT SHOWN

ABUTMENT NO. 1 ELEVATION

(NTS)

ABUTMENT NO. 1 (SECTION A-A)

(NTS)

SEE SHEET 55 FOR ABUTMENT NO. 1 SECTION B-B AND SECTION C-C

EXISTING ABUTMENT

NOTES:

1. NF = NEAR FACE
2. FF = FAR FACE
3. EF = EACH FACE
4. ▲ = CUT TO FIT IN FIELD
5. 3" CLR. UNLESS OTHERWISE SPECIFIED ON THE PLANS
6. SEE SHEET 57 FOR FOOTING REINFORCING
7. SEE SHT 53 FOR BACKWALL DETAIL AND CORNER DETAIL (SECTIONS EE & FF)
8. SEE SHEET 55 FOR SECTION DD
9. SEE SHEET 56A FOR SECTIONS G-G, H-H, AND I-I.

ABUTMENT NO. 1 PLAN & ELEVATION

PROJECT NAME: POWNAL
PROJECT NUMBER: BRZ 1441(19) C/2

FILE NAME: 87e045/str/se045sub.dgn
PROJECT LEADER: R. WHITCOMB
DESIGNED BY: C. CARLSON
se045sub1

PLOT DATE: 02-JUL-2008
DRAWN BY: D. PETERSON
CHECKED BY: W. LAMMER
SHEET 51 OF 108

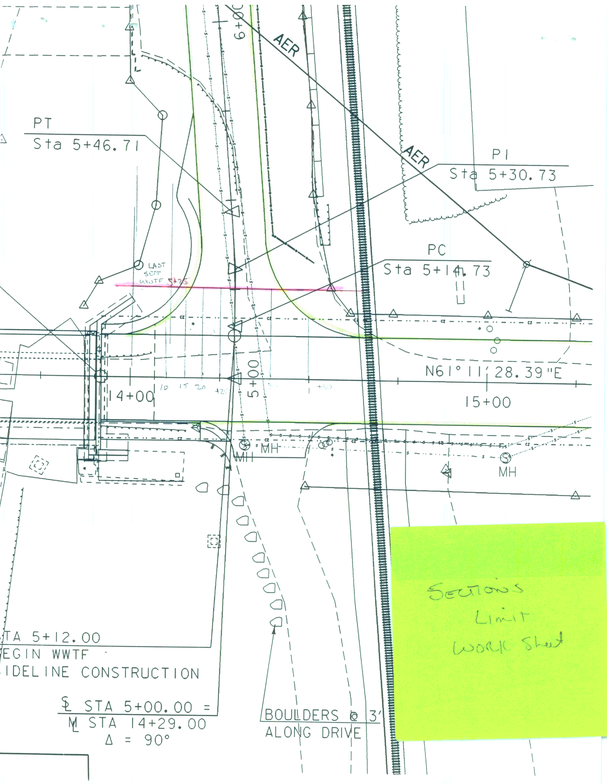
AER
AER
PT
Sta 5+46.71
PI
Sta 5+30.73
PC
Sta 5+14.73
N61° 11' 28.39"E
14+00
15+00
5+00
MH
MH
TA 5+12.00
EGIN WWTF
IDELINE CONSTRUCTION
℄ STA 5+00.00 =
℄ STA 14+29.00
Δ = 90°
BOULDERS @ 3'
ALONG DRIVE
Sections
Limit
Work Shed

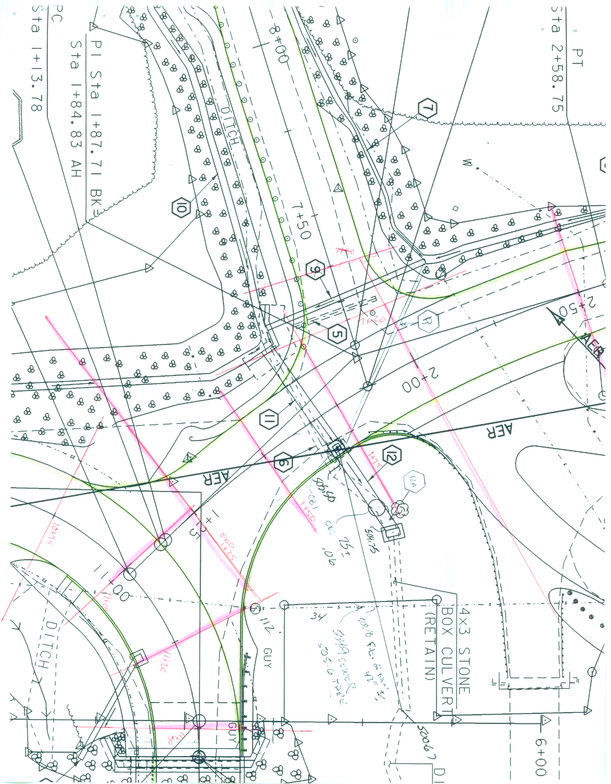
PC
Sta 1+13.78
PI Sta 1+84.83 AH
PI Sta 1+87.71 BK
Sta 2+58.75
8+00
7+50
2+00
DITCH
DITCH
AER
AER
14'x3' STONE
BOX CULVERT
(RETAIN)
GUY
GUY
GUY
6+00

SUBBASE TRANSITION BETWEEN STA 8+75 ~ STA 10+50

NTS

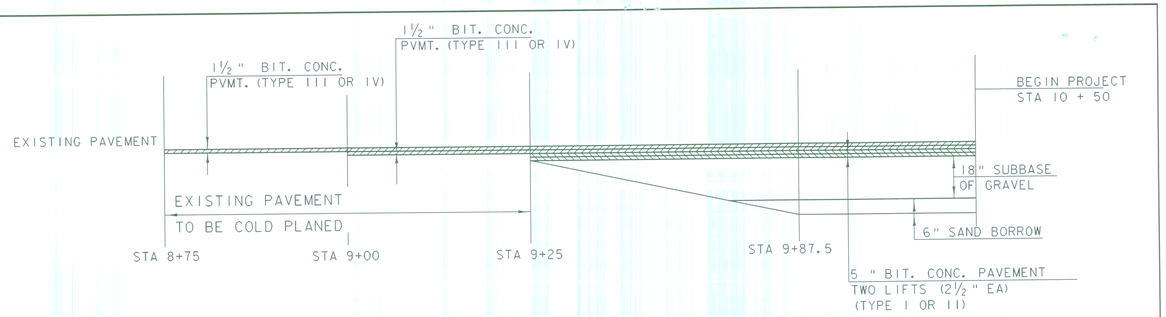

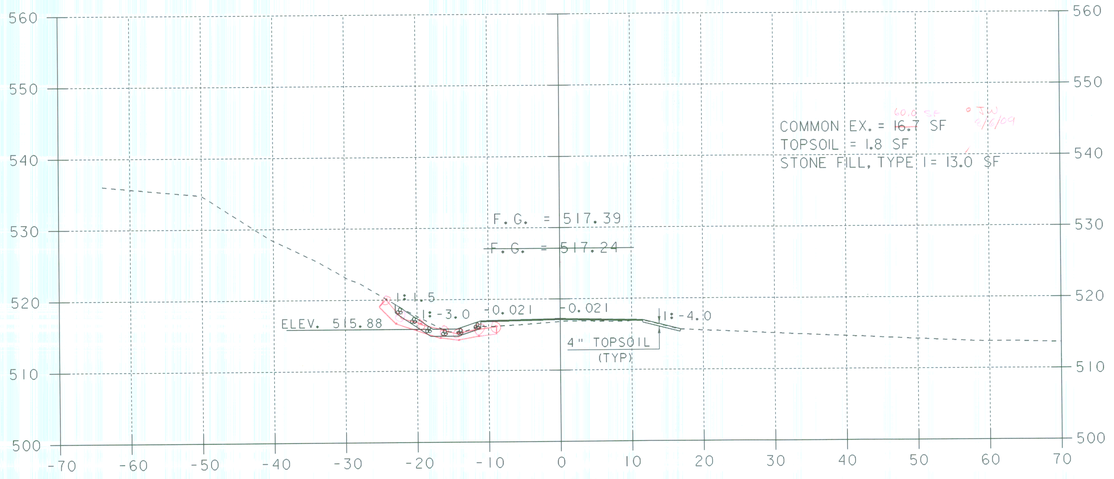

9+00

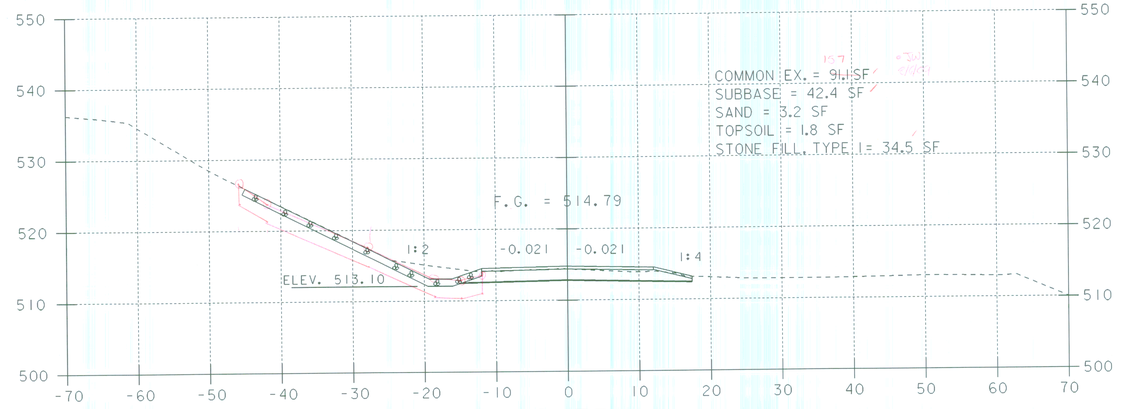

9+75

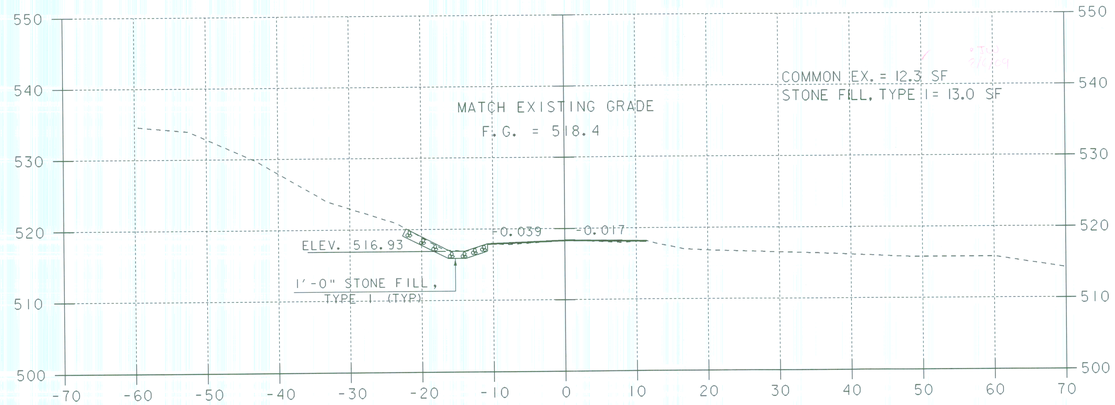

8+75
BEGIN APPROACH

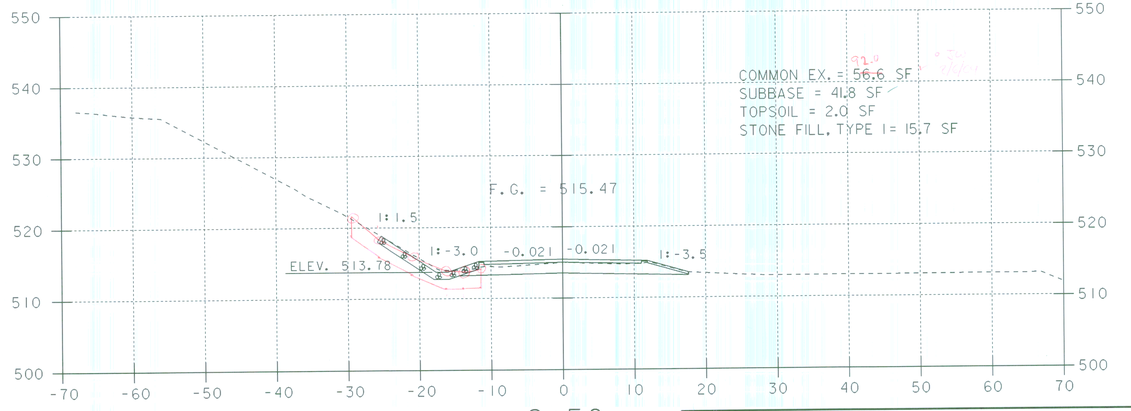

9+50

SCALE 1" = 10'-0"
10 0 10

SHEET NAME:	MAINLINE CROSS SECTIONS		
PROJECT NAME:	POWNAL	HIGHWAY NO.:	TH 24
PROJECT NUMBER:	BRZ 1441(19) C/2	BRIDGE NO.:	41
		OVER:	HOOSIC RIVER
FILE NAME: 87e045/str/se045xs2.dgn		PLOT DATE:	19-FEB-2009
PROJECT MANAGER: R. WHITCOMB		DRAWN BY:	J.GILMORE
DESIGNED BY: C. CARLSON		IPARM NAME:	se045mxl.i
		SHEET 67 OF 108	

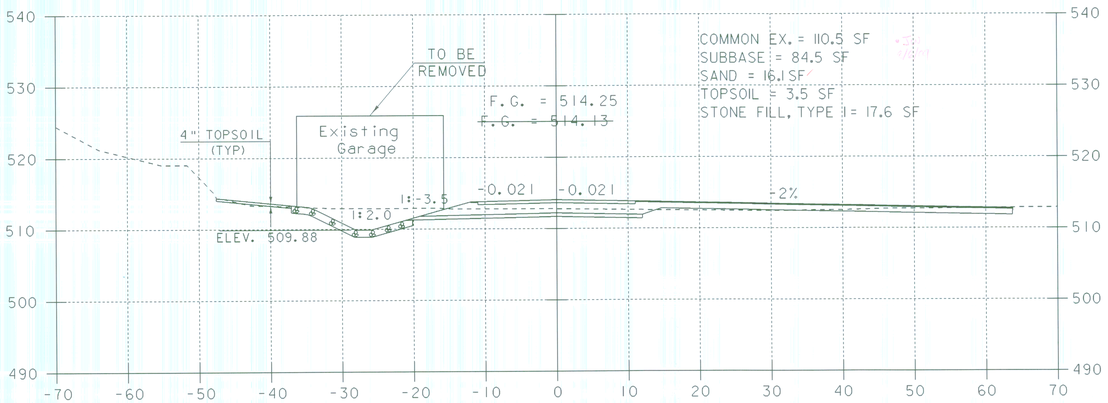

10+46

CONSTRUCT DRIVE RIGHT

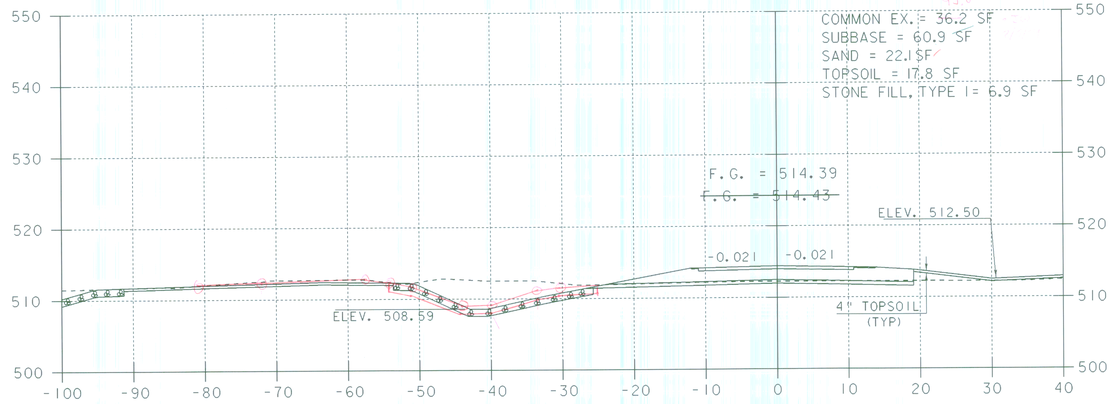

10+75

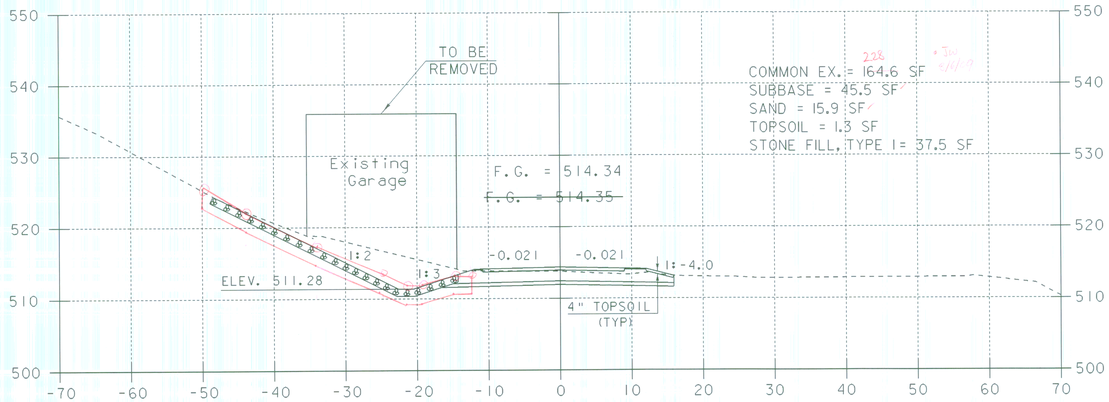

10+00

EXTRA DEPTH STONE

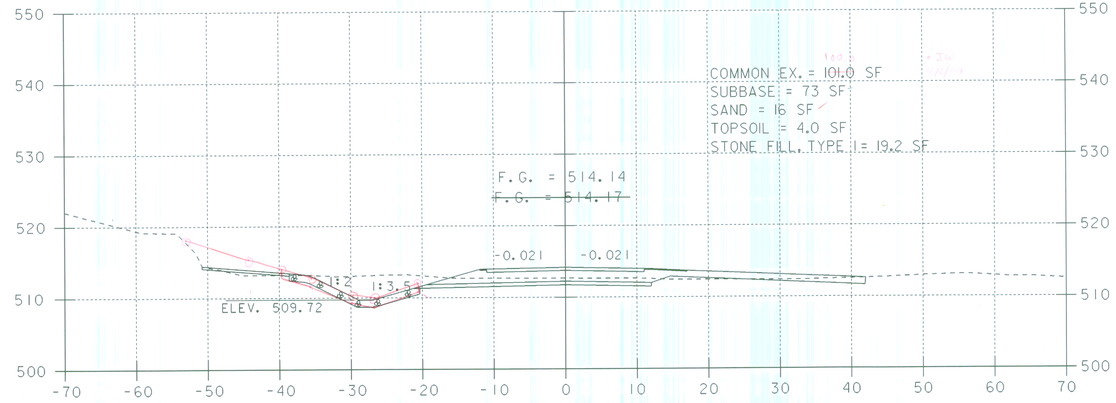

10+50

END APPROACH

BEGIN PROJECT

STA 10+50.8 RT

BEGIN SPECIAL DITCH

SCALE 1" = 10'-0

10 0 10

SHEET NAME:	MAINLINE CROSS SECTIONS		
PROJECT NAME:	POWNAL	HIGHWAY NO.:	TH 24
PROJECT NUMBER:	BRZ 1441(19) C/2	BRIDGE NO.:	41
		OVER:	HOOSIC RIVER
FILE NAME: 87e045/str/se045xs2.dgn		PLOT DATE:	19-FEB-2009
PROJECT MANAGER: R. WHITCOMB		DRAWN BY:	J.GILMORE
DESIGNED BY: C. CARLSON		IPARM NAME:	se045mx2.1
		SHEET	68 OF 108

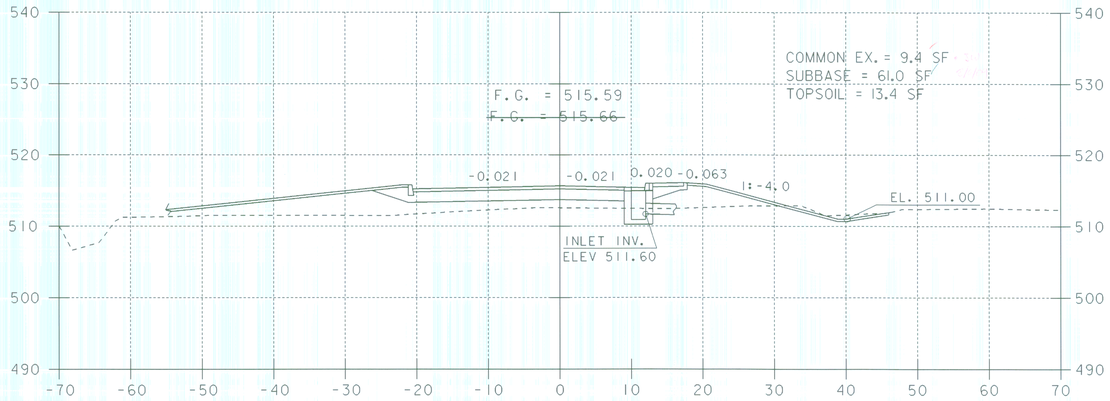

11+25

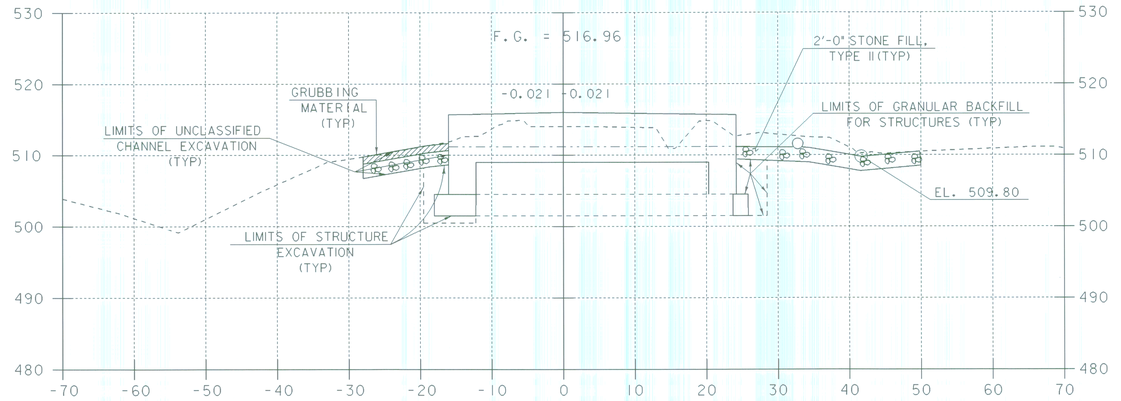

11+57.62 LT.
END CAST-IN-PLACE CONCRETE CURB, TYPE B

11+57.62
BEGIN BRIDGE

11+57.62 RT.
END CAST-IN-PLACE CONCRETE CURB, TYPE B
END PORTLAND CEMENT CONCRETE SIDEWALK, 5 INCH

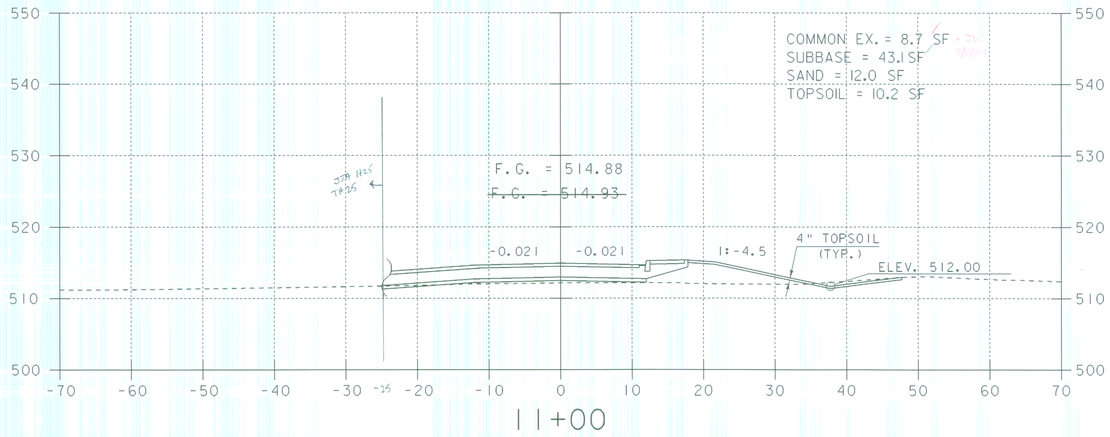

11+00

10+88.00 RT.
BEGIN CAST-IN-PLACE CONCRETE CURB, TYPE B
BEGIN PORTLAND CEMENT CONCRETE SIDEWALK, 5 INCH

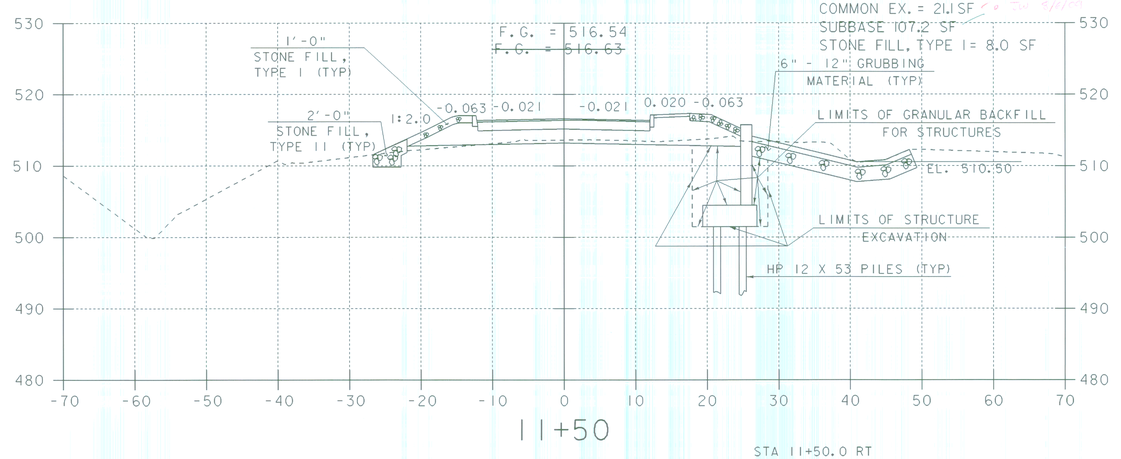

11+50

STA 11+50.0 RT
END SPECIAL DITCH

SCALE 1" = 10'-0
10 0 10

SHEET NAME:	MAINLINE CROSS SECTIONS		
PROJECT NAME:	POWNAL	HIGHWAY NO.:	TH 24
PROJECT NUMBER:	BRZ 1441(19) C/2	BRIDGE NO.:	41
		OVER:	HOOSIC RIVER
FILE NAME: 87e045/str/se045xs2.dgn		PLOT DATE:	19-FEB-2009
PROJECT MANAGER: R. WHITCOMB		DRAWN BY:	J.GILMORE
DESIGNED BY: C. CARLSON		IPARM NAME:	se045mx3.i
		SHEET	69 OF 108

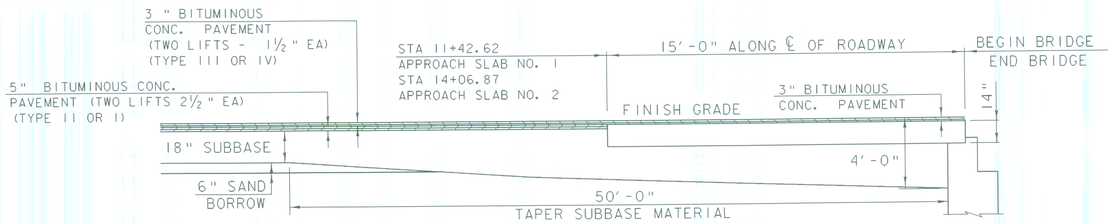

APPROACH SLAB DETAIL

NTS

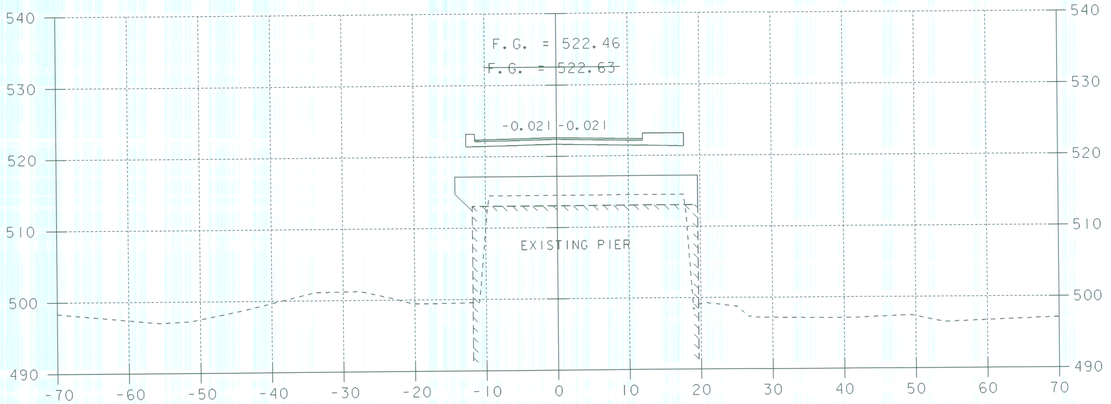

12+93.62
℄ OF PIER

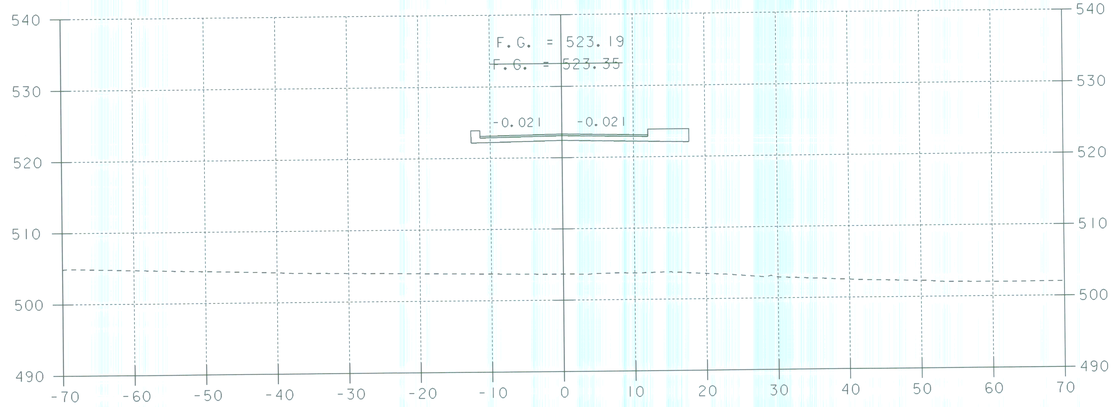

13+50

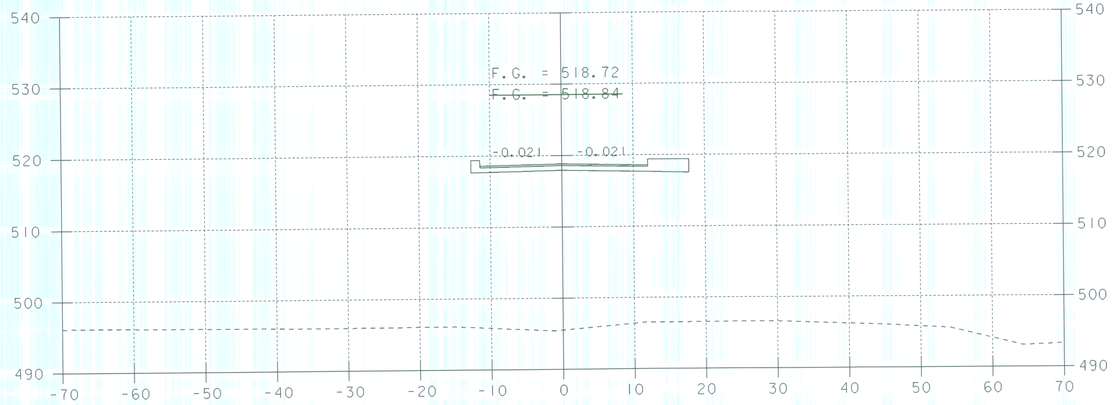

12+00

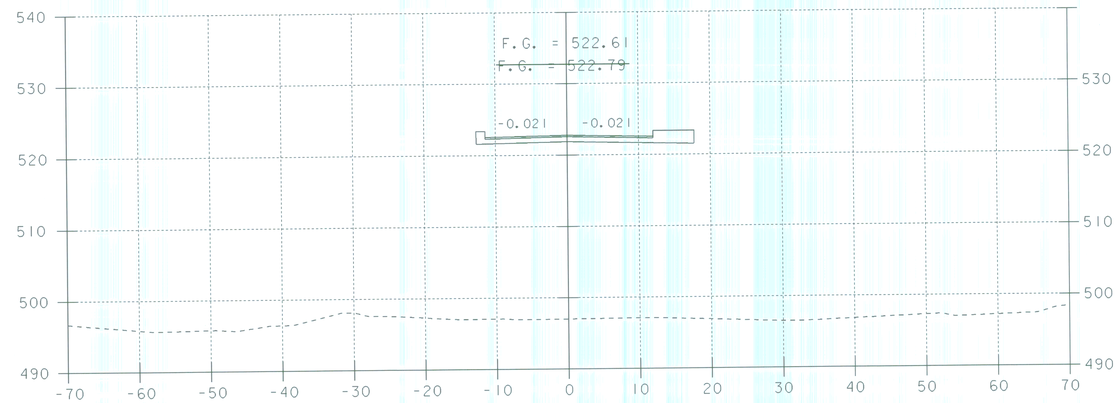

13+00

SCALE 1" = 10'-0

SHEET NAME:	MAINLINE CROSS SECTIONS		
PROJECT NAME:	POWNAL	HIGHWAY NO.:	TH 24
PROJECT NUMBER:	BRZ 1441(19) C/2	BRIDGE NO.:	41
		OVER:	HOOSIC RIVER
FILE NAME: 87e045/str/se045xs2.dgn		PLOT DATE:	19-FEB-2009
PROJECT MANAGER: R. WHITCOMB		DRAWN BY:	J.GILMORE
DESIGNED BY: C. CARLSON		IPARM NAME:	se045mx4.i
		SHEET 70 OF 108	

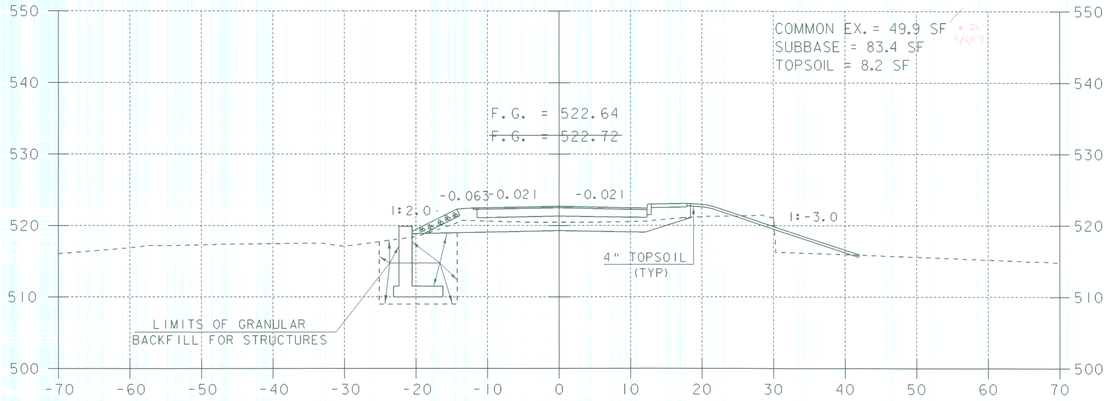

14+00

STA 14+01.22 LT.
END STRUCTURE EXCAVATION AND
GRANULAR BACKFILL FOR STRUCTURES

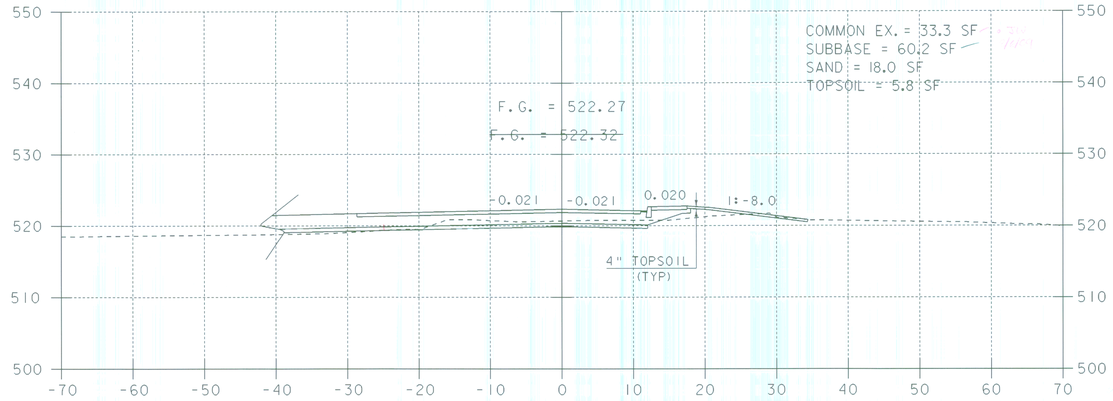

14+15

STA 13+99.57 RT.
END STRUCTURE EXCAVATION AND
GRANULAR BACKFILL FOR STRUCTURES

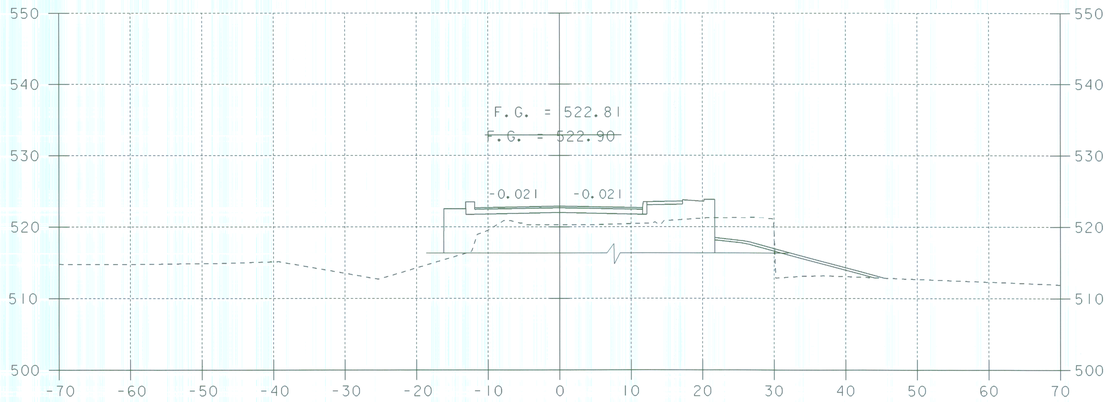

13+91.87
END BRIDGE

STA 13+87.34 LT.
BEGIN STRUCTURE EXCAVATION AND
GRANULAR BACKFILL FOR STRUCTURES

STA. 13+91.87 RT.
BEGIN CAST-IN-PLACE CONCRETE CURB, TYPE B
BEGIN PORTLAND CEMENT CONCRETE SIDEWALK, 5 INCH

STA 13+87.40 RT.
BEGIN STRUCTURE EXCAVATION AND
GRANULAR BACKFILL FOR STRUCTURES

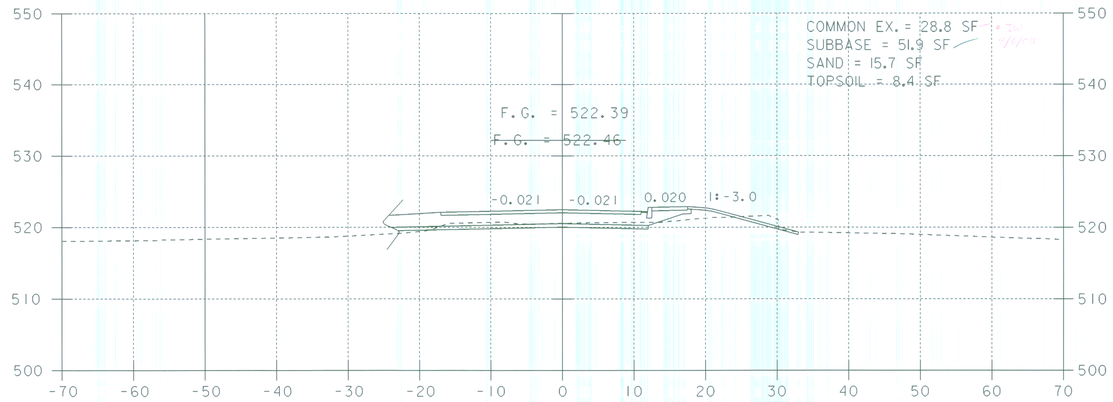

14+10

SCALE 1" = 10'-0
10 0 10

SHEET NAME: MAINLINE CROSS SECTIONS

PROJECT NAME: POWNAL
PROJECT NUMBER: BRZ 1441(19) C/2

HIGHWAY NO.: TH 24
BRIDGE NO.: 41
OVER: HOOSIC RIVER

FILE NAME: 87e045/str/se045xs2.dgn
PROJECT MANAGER: R. WHITCOMB
DESIGNED BY: C. CARLSON

PLOT DATE: 19-FEB-2009
DRAWN BY: J.GILMORE
IPARM NAME: se045mx5.1
SHEET 71 OF 108

STA. 14+28.00 RT.
END PORTLAND CEMENT CONCRETE SIDEWALK, 5 INCH

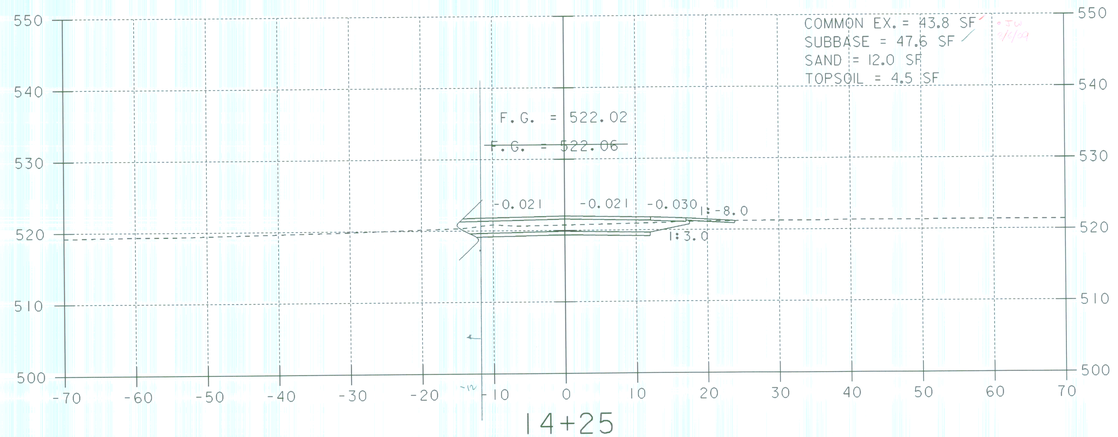

14+25

SEE SHEET 83 FOR
WWTF SIDELINE APPROACH NEAR
RR TRACKS

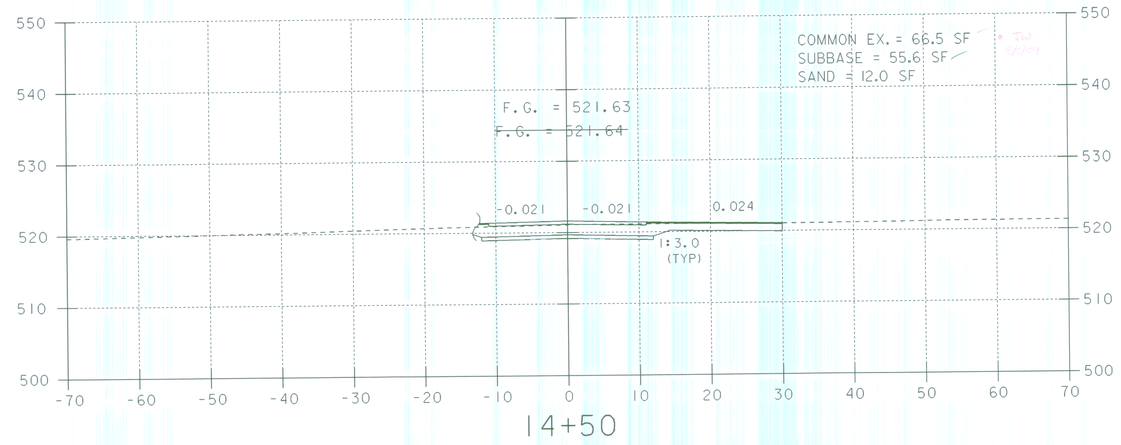

14+50

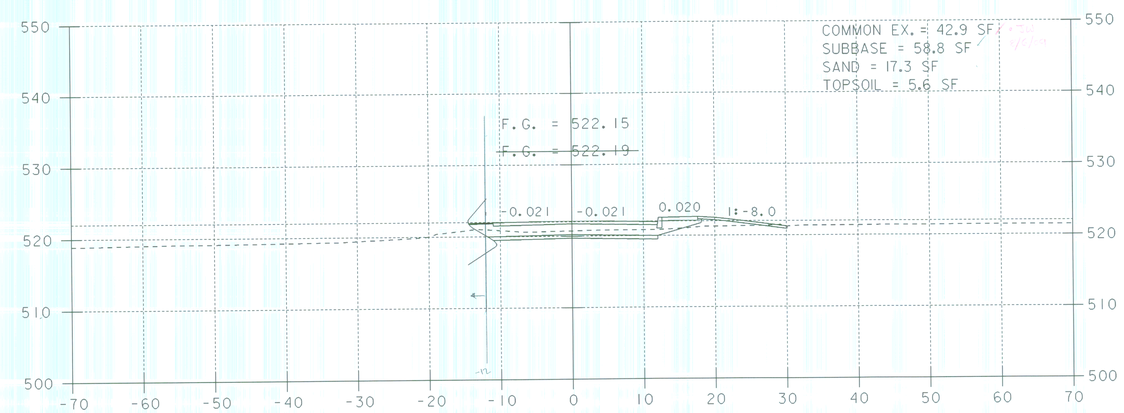

14+20

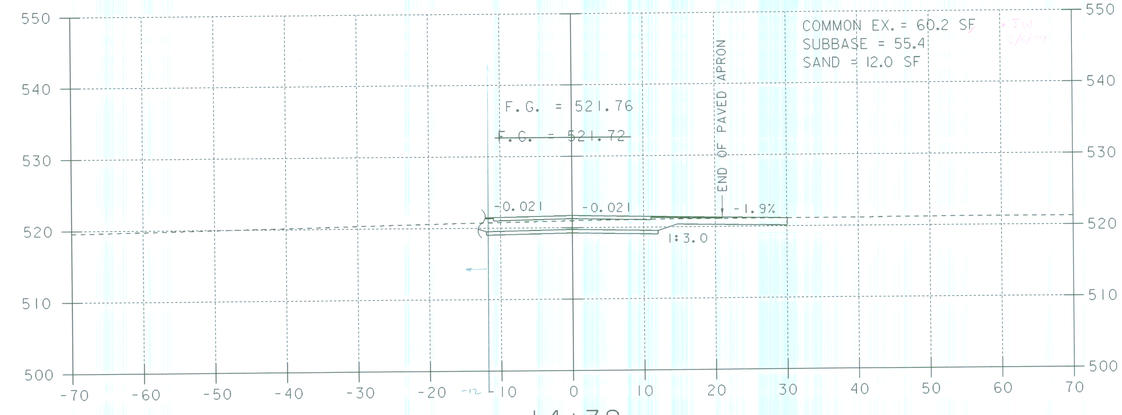

14+39
DRIVE RIGHT

STA. 14+20.00 RT.
END CAST-IN-PLACE CONCRETE CURB, TYPE B

SCALE 1" = 10'-0
10 0 10

SHEET NAME:	MAINLINE CROSS SECTIONS		
PROJECT NAME:	POWNAL	HIGHWAY NO.:	TH 24
PROJECT NUMBER:	BRZ 1441(19) C/2	BRIDGE NO.:	41
		OVER:	HOOSIC RIVER
FILE NAME: 87e045/str/se045xs2.dgn		PLOT DATE:	19-FEB-2009
PROJECT MANAGER: R. WHITCOMB		DRAWN BY:	J.GILMORE
DESIGNED BY:	C. CARLSON	IPARM NAME:	se045mx6.i
		SHEET	72 OF 108

PVT 14+05.00
ELEV 522.52
PVC 14+22.00
ELEV 522.10
PVT 14+62.00
ELEV 521.62
PVI 14+42.00
ELEV 521.60
PVI 16+71.00
ELEV 521.18
L = 40.00 FT
SSD = 311 FT
-0.4912%
0.0796%
14+00
14+25
14+50
14+75
15+00
15+25
15+50
15+75
16+00
16+25
16+50
16+75
17+00
480
490
500
510
520
530
540
LINE
SURFACE
OFFSET
old ground
0.00
Scaled
2.0000
1.0000
Times Ver.
Times Hor.

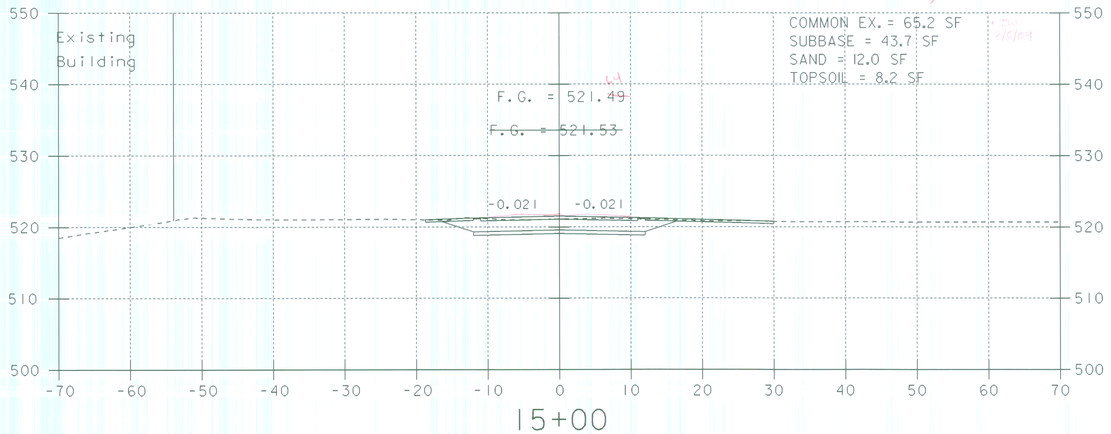

15+00

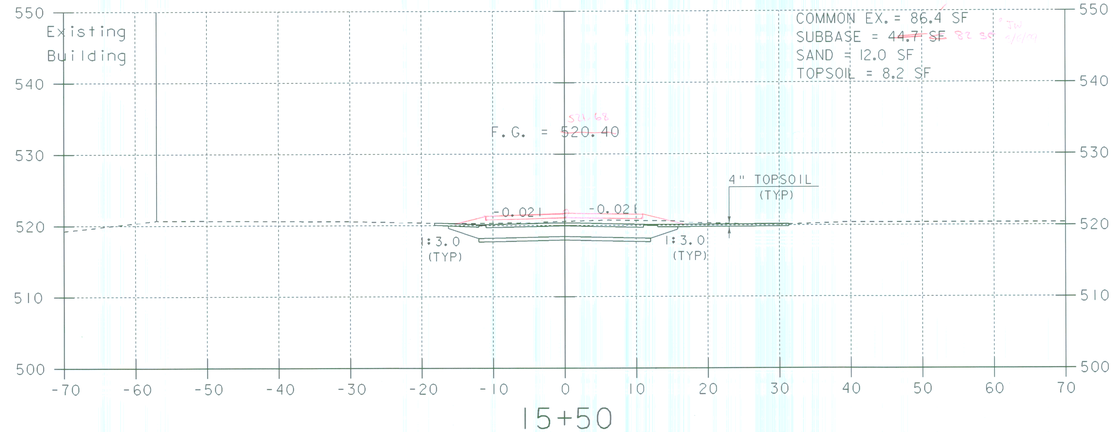

15+50

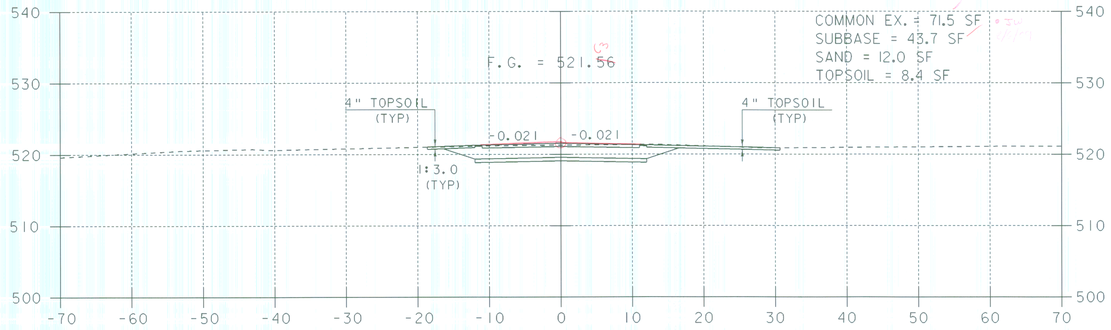

14+75

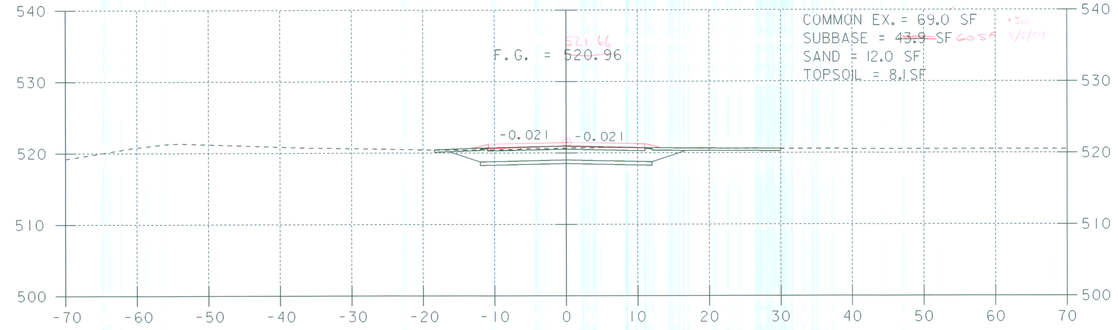

15+25

SCALE 1" = 10'-0

10 0 10

SHEET NAME:	MAINLINE CROSS SECTIONS		
PROJECT NAME:	POWNAL	HIGHWAY NO.:	TH 24
PROJECT NUMBER:	BRZ 1441(19) C/2	BRIDGE NO.:	41
		OVER:	HOOSIC RIVER
FILE NAME: 87e045/str/se045xs2.dgn		PLOT DATE:	19-FEB-2009
PROJECT MANAGER: R. WHITCOMB		DRAWN BY:	J.GILMORE
DESIGNED BY: C. CARLSON		IPARM NAME:	se045mx7.i
		SHEET	73 OF 108

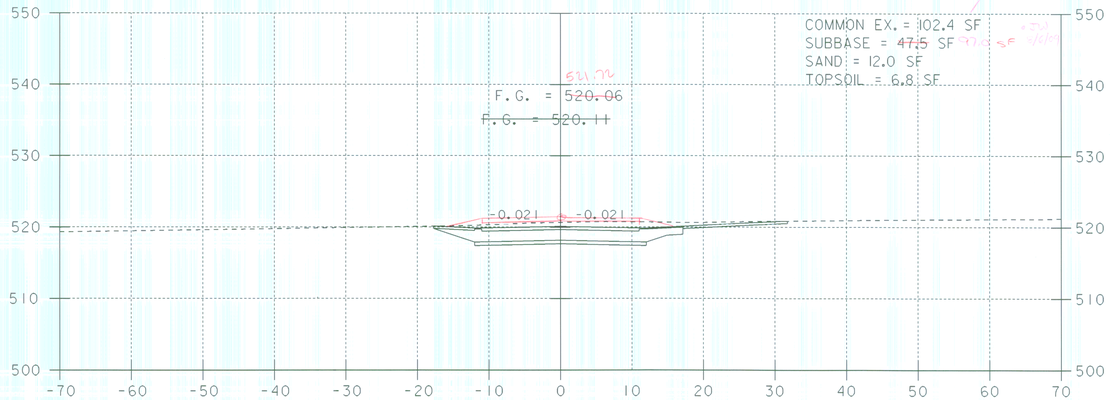

16+00

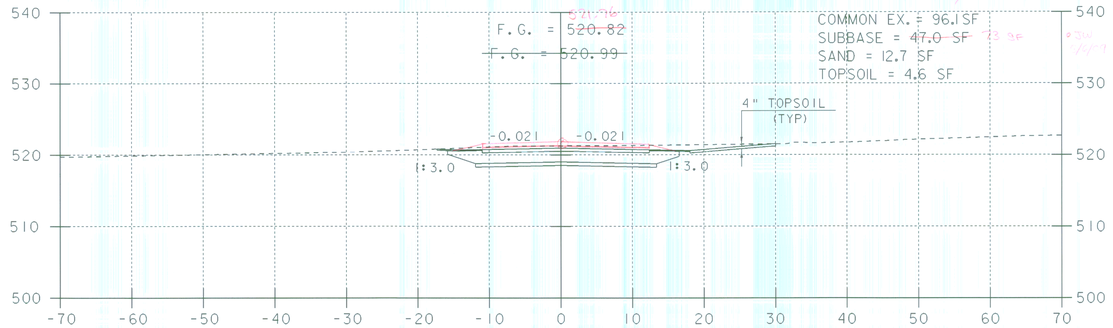

16+50

STA 15+78
CONSTRUCT DRIVE RT

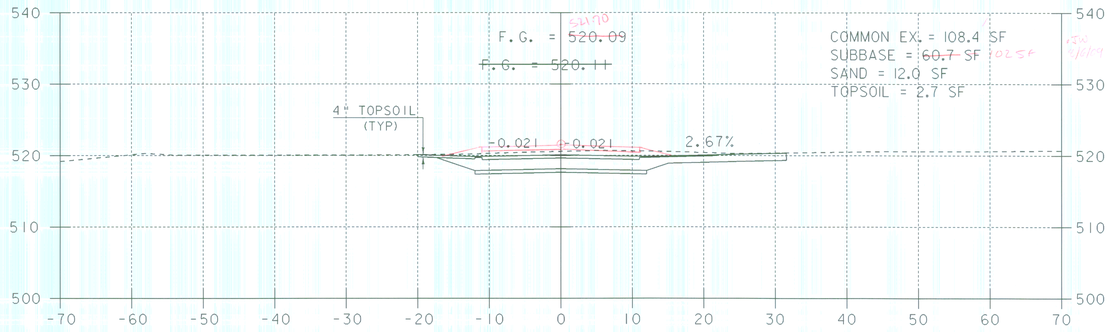

15+75

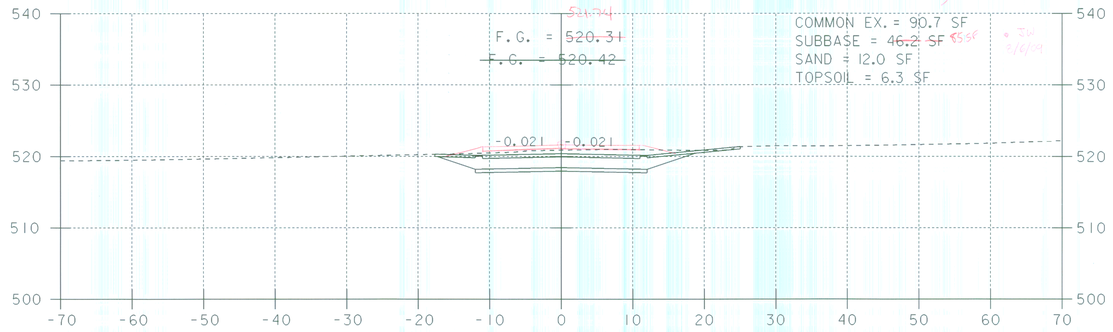

16+25

SCALE 1" = 10'-0
10 0 10

SHEET NAME:	MAINLINE CROSS SECTIONS		
PROJECT NAME:	POWNAL	HIGHWAY NO.:	TH 24
PROJECT NUMBER:	BRZ 1441(19) C/2	BRIDGE NO.:	41
		OVER:	HOOSIC RIVER
FILE NAME: 87e045/str/se045xs2.dgn		PLOT DATE:	19-FEB-2009
PROJECT MANAGER: R. WHITCOMB		DRAWN BY:	J.GILMORE
DESIGNED BY: C. CARLSON		IPARM NAME:	se045mx8.1
		SHEET 74 OF 108	

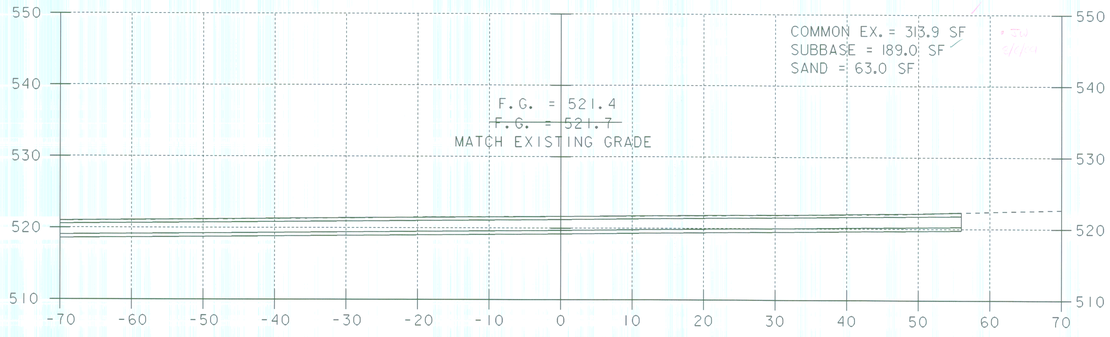

16+77
SKEW 6.636°
END PROJECT

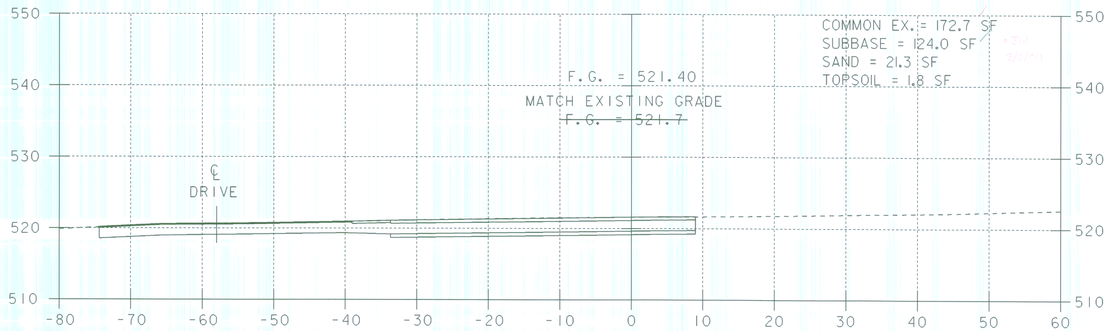

16+75

SCALE 1" = 10'-0
10 0 10

SHEET NAME:	MAINLINE CROSS SECTIONS		
PROJECT NAME:	POWNAL	HIGHWAY NO.:	TH 24
PROJECT NUMBER:	BRZ 1441(19) C/2	BRIDGE NO.:	41
		OVER:	HOOSIC RIVER
FILE NAME: 87e045/str/se045xs2.dgn		PLOT DATE:	19-FEB-2009
PROJECT MANAGER: R. WHITCOMB		DRAWN BY:	J.GILMORE
DESIGNED BY: C. CARLSON		IPARM NAME:	se045mx9.i
		SHEET 75 OF 108	

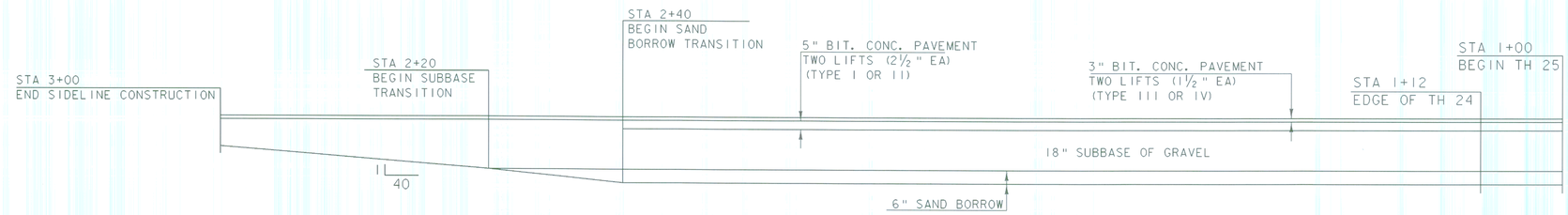

MATERIALS TRANSITION TH 25

NTS

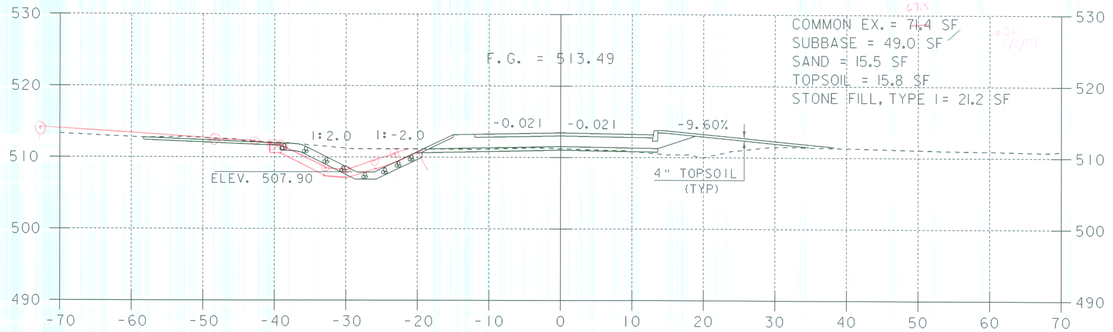

1+50

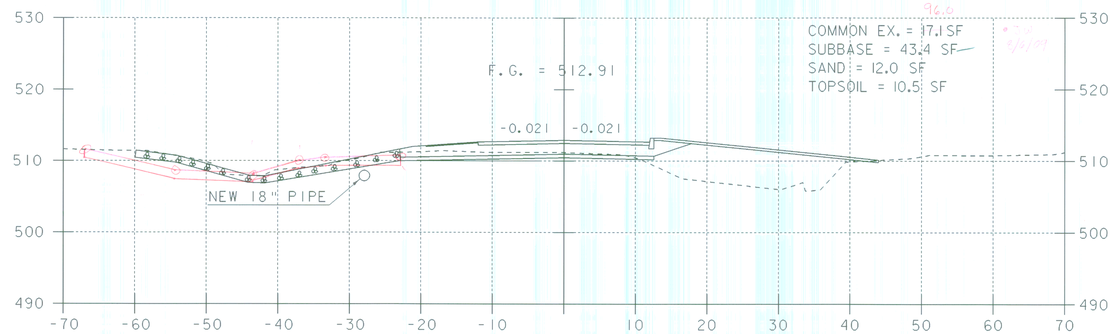

1+75

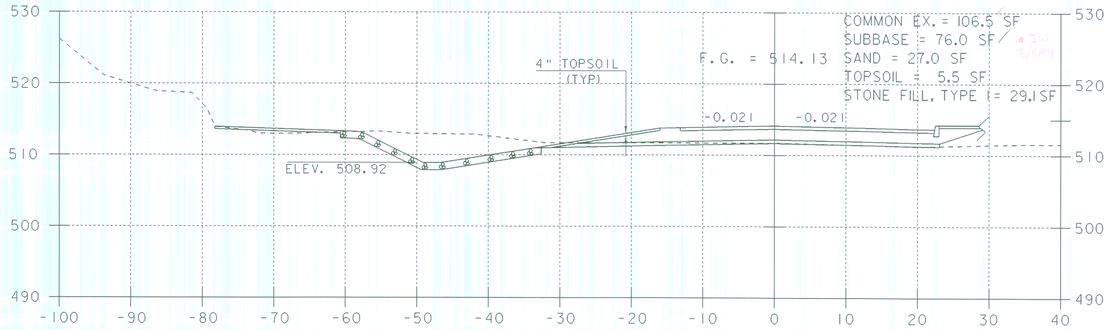

1+25

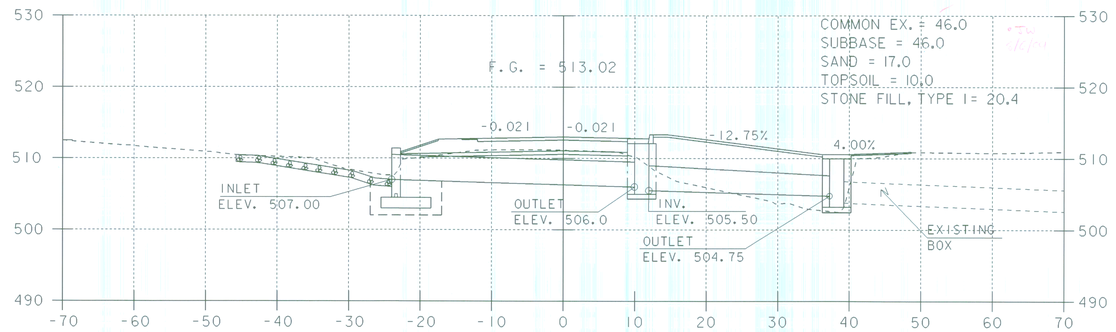

PIPE AT 1+68
SKEW = 88° RT

STA 1+12
BEGIN TH 25
SIDELINE
CONSTRUCTION

SCALE 1" = 10'-0

SNAKE HILL ROAD

SHEET NAME:	TOWN HIGHWAY 25 CROSS SECTIONS		
PROJECT NAME:	POWNAL	HIGHWAY NO.:	TH 24
PROJECT NUMBER:	BRZ 1441(19) C/2	BRIDGE NO.:	41
		OVER:	HOOSIC RIVER
FILE NAME: 87e045/str/se045xs2.dgn		PLOT DATE:	19-FEB-2009
PROJECT MANAGER: R. WHITCOMB		DRAWN BY:	J.GILMORE
DESIGNED BY: C. CARLSON		IPARM NAME:	se045sx1.i
		SHEET	76 OF 108

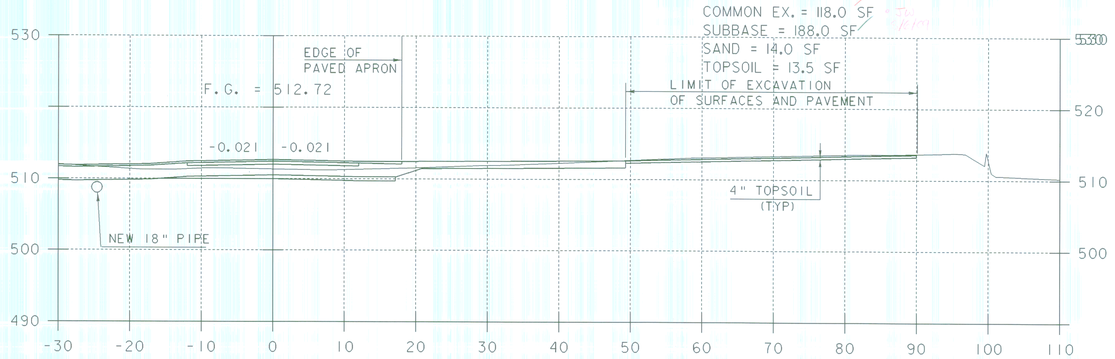

2+00

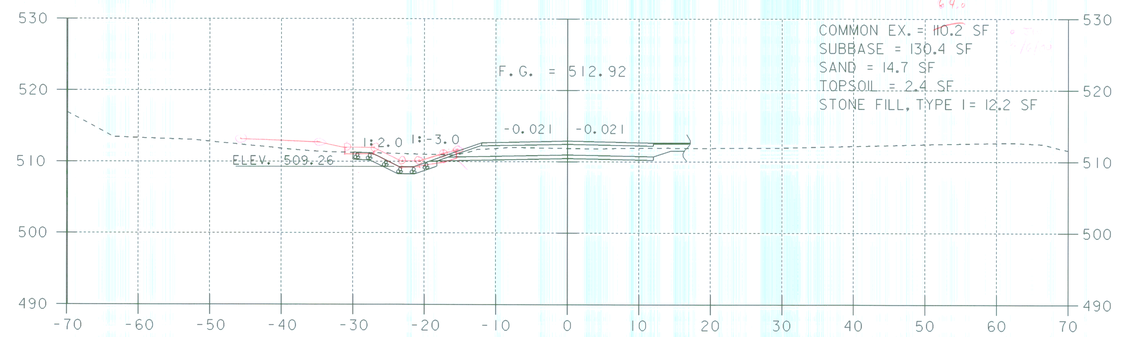

2+25

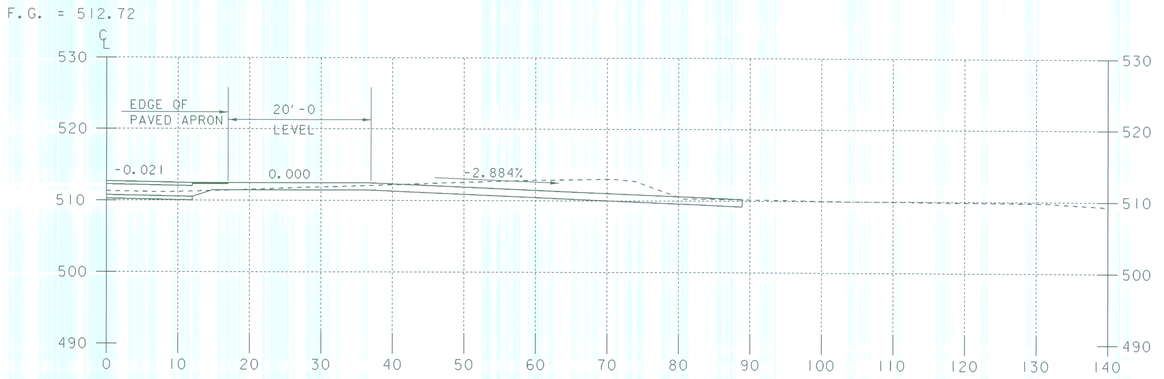

2+00

PROFILE ALONG DRIVE #1 RIGHT

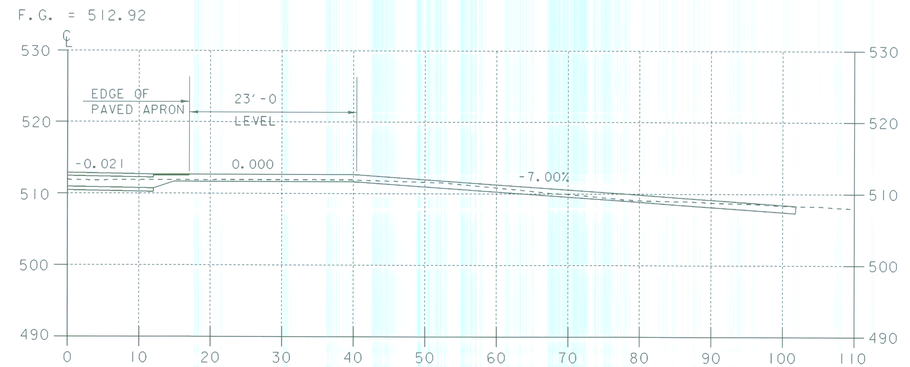

2+25

PROFILE ALONG DRIVE #2 RIGHT

TH 25 STA 1+85.14 =
TH 26 7+00.00
SEE SHEETS 79-82

SCALE 1" = 10'-0
10 0 10

SNAKE HILL ROAD

SHEET NAME:	TOWN HIGHWAY 25 CROSS SECTIONS		
PROJECT NAME:	POWNAL	HIGHWAY NO.:	TH 24
PROJECT NUMBER:	BRZ 1441(19) C/2	BRIDGE NO.:	41
		OVER:	HOOSIC RIVER
FILE NAME: 87e045/str/se045xs2.dgn		PLOT DATE:	19-FEB-2009
PROJECT MANAGER: R. WHITCOMB		DRAWN BY:	J.GILMORE
DESIGNED BY: C. CARLSON		IPARM NAME:	se045sx2.i
		SHEET 77 OF 108	

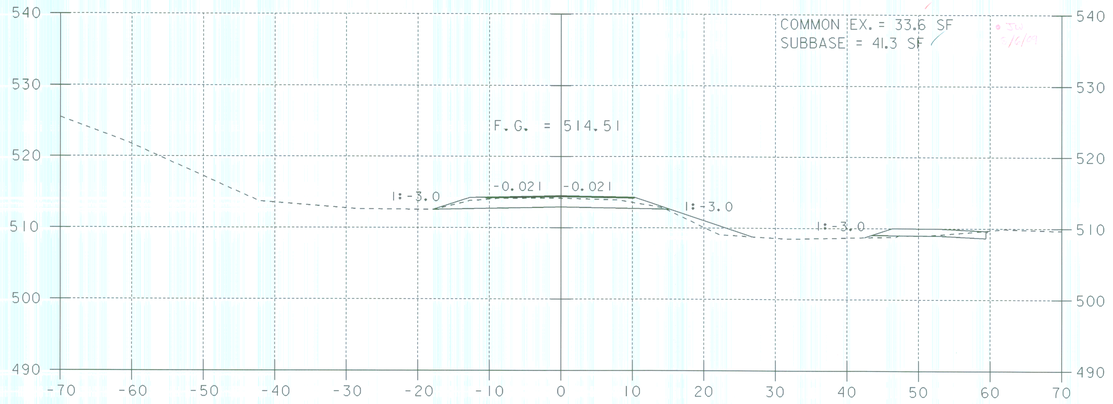

2+75

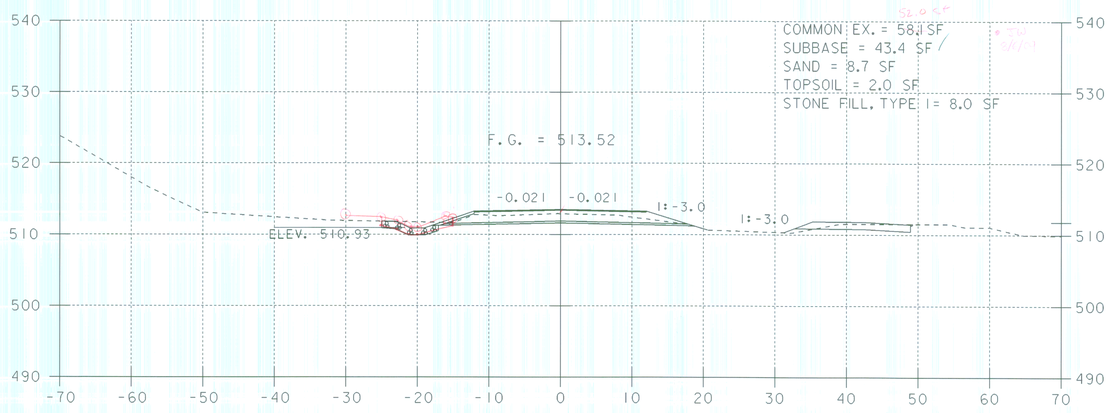

2+50

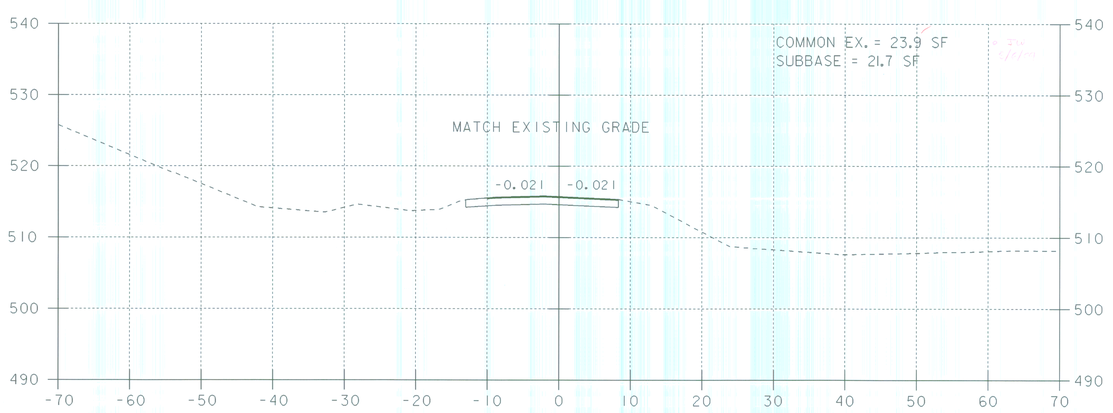

3+00
END TH 25
SIDELINE
CONSTRUCTION

SCALE 1" = 10'-0
10 0 10

SNAKE HILL ROAD

SHEET NAME: TOWN HIGHWAY 25 CROSS SECTIONS

PROJECT NAME: POWNAL
PROJECT NUMBER: BRZ 1441(19) C/2

HIGHWAY NO.: TH 24
BRIDGE NO.: 41
OVER: HOOSIC RIVER

FILE NAME: 87e045/str/se045xs2.dgn
PROJECT MANAGER: R. WHITCOMB
DESIGNED BY: C. CARLSON

PLOT DATE: 19-FEB-2009
DRAWN BY: J.GILMORE
IPARM NAME: se045sx3.i
SHEET 78 OF 108

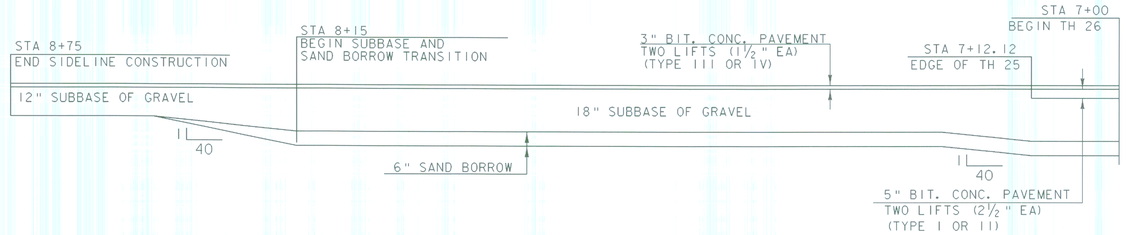

MATERIALS TRANSITION

NTS

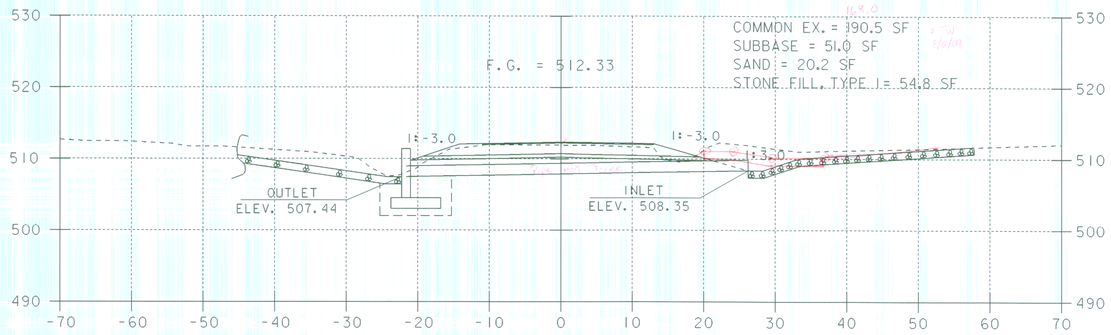

STA 7+19.0 LT
BEGIN STONE LINED DITCH WITH
STONE FILL, TYPE I

7+26
SKEWED SECTION OF ℄ OF 18" PIPE

STA 7+23.2 RT
BEGIN STONE LINED DITCH WITH
STONE FILL, TYPE I

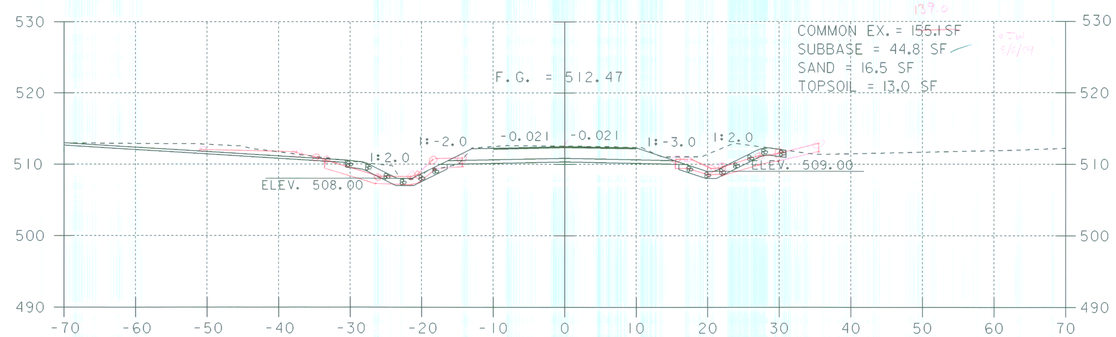

7+40

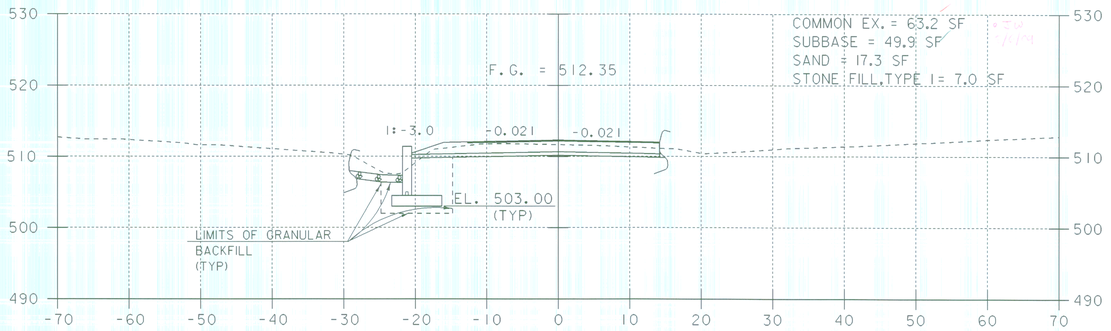

7+20

STA 7+12.12
BEGIN TH 26
SIDELINE CONSTRUCTION

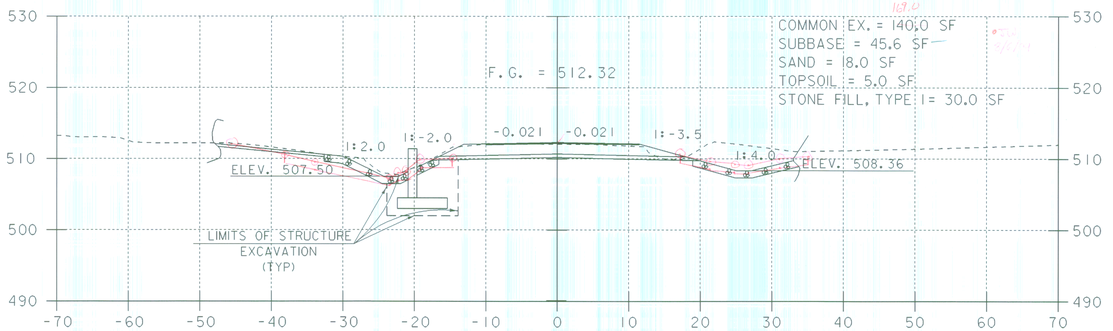

7+30

SCALE 1" = 10'-0

10 0 10

FURLONG ROAD

SHEET NAME:	TOWN HIGHWAY 26 CROSS SECTIONS		
PROJECT NAME:	POWNAL	HIGHWAY NO.:	TH 24
PROJECT NUMBER:	BRZ 1441(19) C/2	BRIDGE NO.:	41
		OVER:	HOOSIC RIVER
FILE NAME: 87e045/str/se045xs2.dgn		PLOT DATE:	19-FEB-2009
PROJECT MANAGER: R. WHITCOMB		DRAWN BY:	J.GILMORE
DESIGNED BY: C. CARLSON		IPARM NAME:	se045sx4.i
		SHEET	79 OF 108

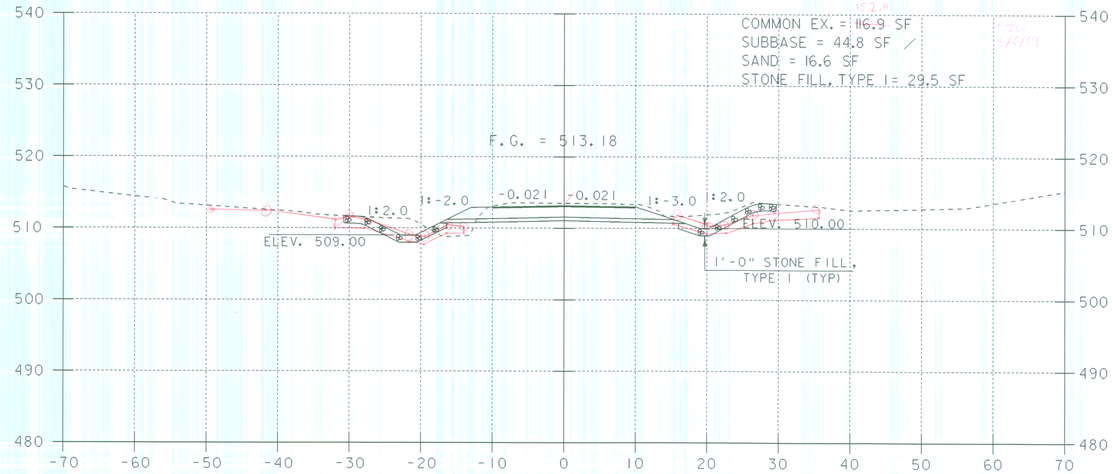

7+60

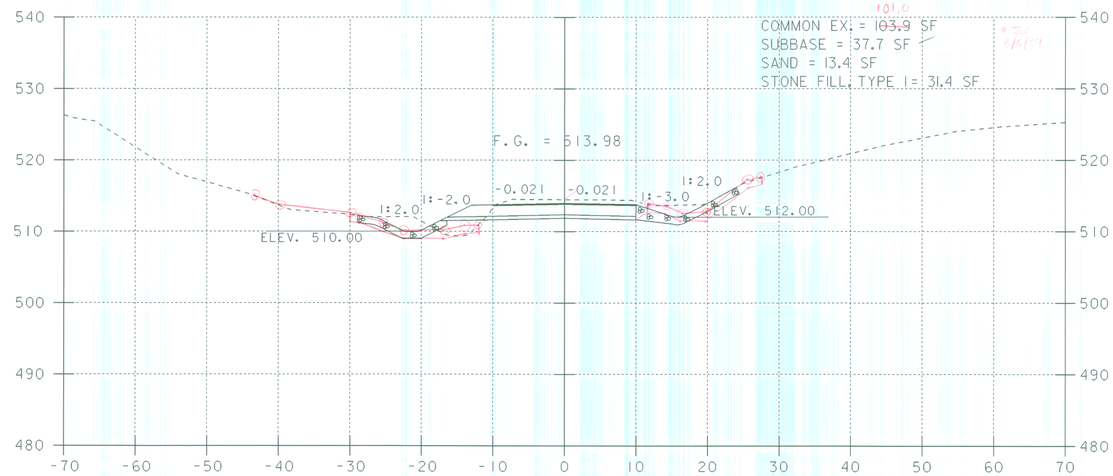

7+80

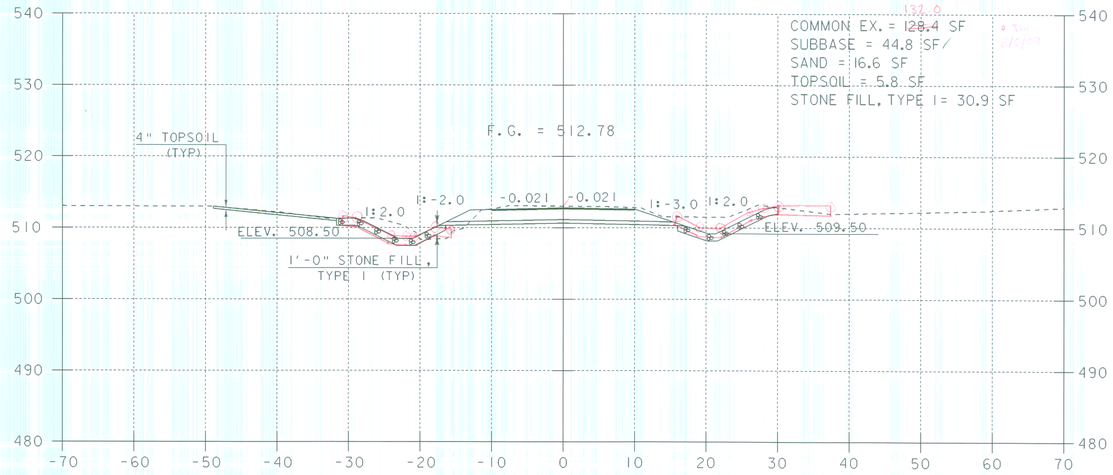

7+50

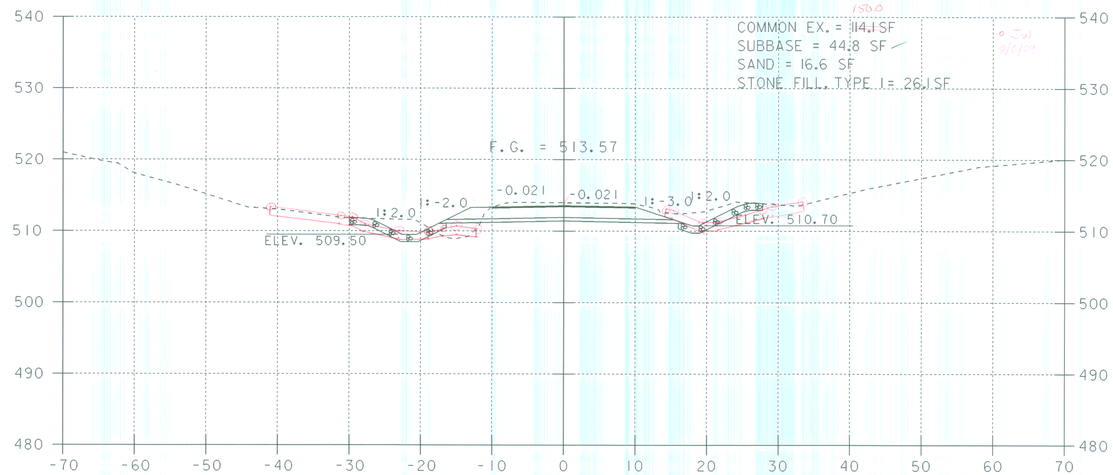

7+70

SCALE 1" = 10'-0

10 0 10

FURLONG ROAD

SHEET NAME:	TOWN HIGHWAY 26 CROSS SECTIONS		
PROJECT NAME:	POWNAL	HIGHWAY NO.:	TH 24
PROJECT NUMBER:	BRZ 1441(19) C/2	BRIDGE NO.:	41
		OVER:	HOOSIC RIVER
FILE NAME: 87e045/str/se045xs2.dgn		PLOT DATE:	19-FEB-2009
PROJECT MANAGER: R. WHITCOMB		DRAWN BY:	J.GILMORE
DESIGNED BY: C. CARLSON		IPARM NAME:	se045sx5.i
		SHEET	80 OF 108

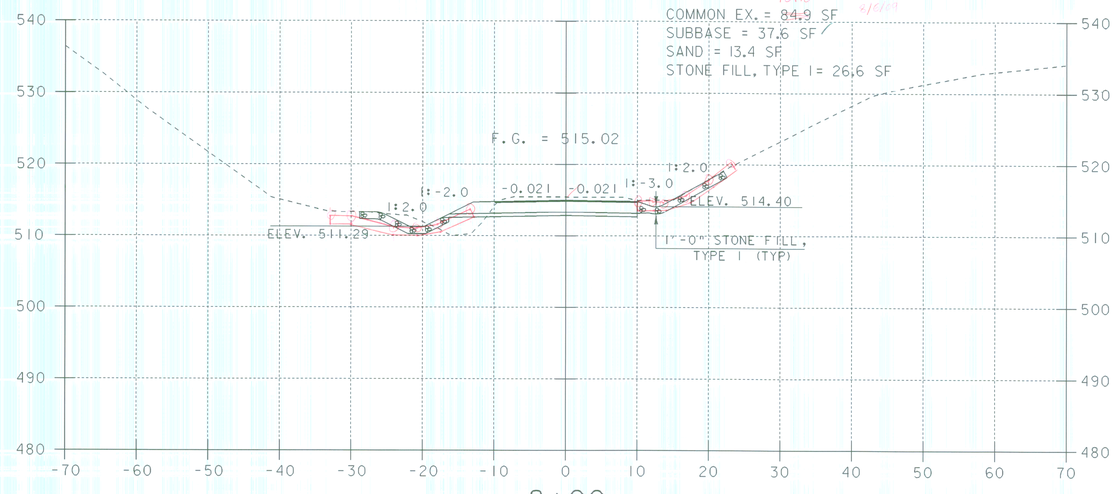

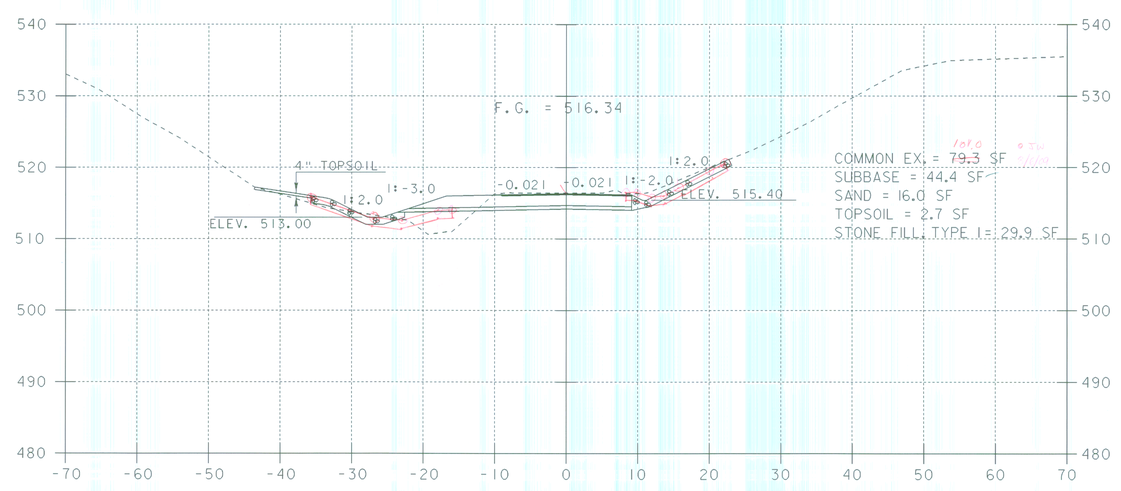

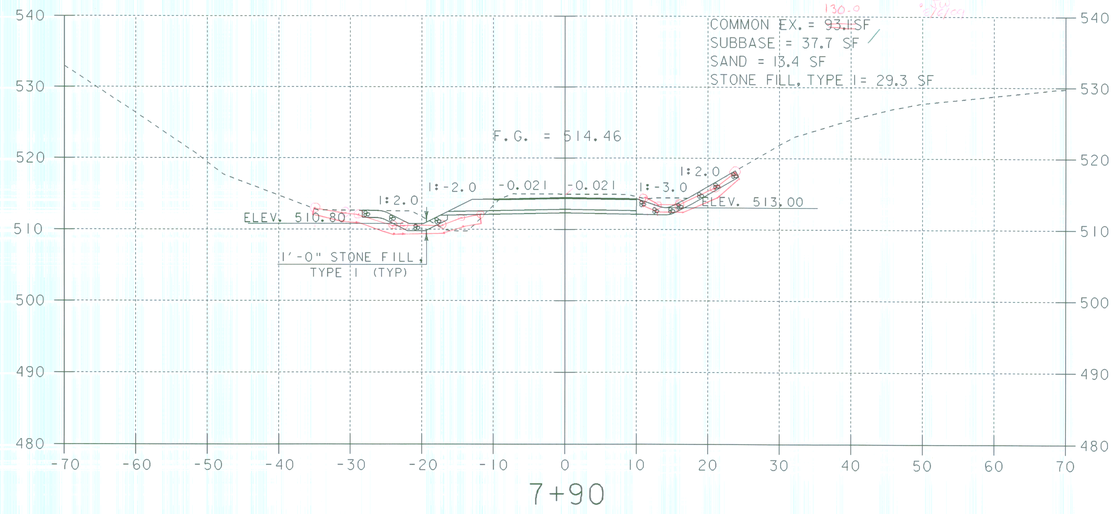

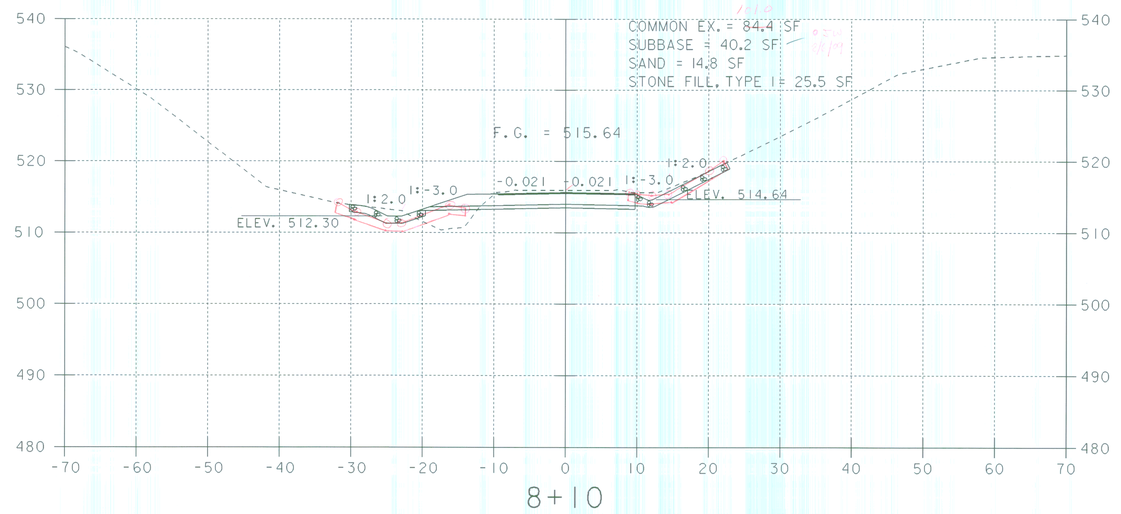

SCALE 1" = 10'-0

FURLONG ROAD

SHEET NAME:	TOWN HIGHWAY 26 CROSS SECTIONS		
PROJECT NAME:	POWNAL	HIGHWAY NO.:	TH 24
PROJECT NUMBER:	BRZ 1441(19) C/2	BRIDGE NO.:	41
		OVER:	HOOSIC RIVER
FILE NAME: 87e045/str/se045xs2.dgn		PLOT DATE:	19-FEB-2009
PROJECT MANAGER: R. WHITCOMB		DRAWN BY:	J.GILMORE
DESIGNED BY: C. CARLSON		IPARM NAME:	se045sx6.i
		SHEET	81 OF 108

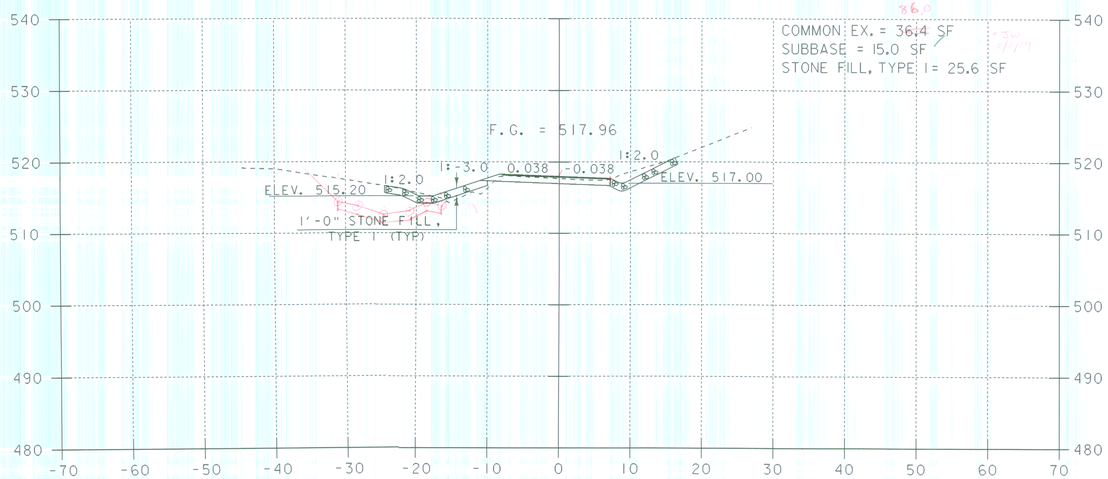

8+40

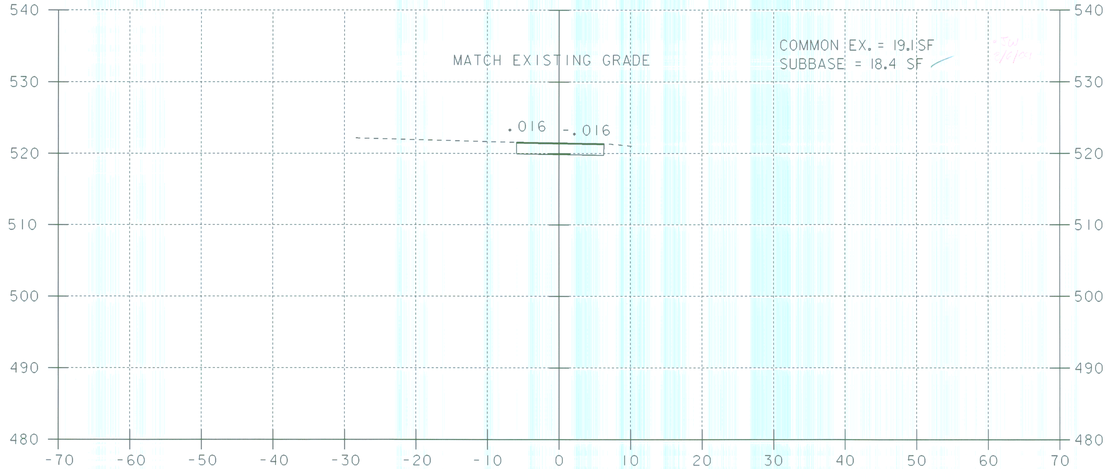

8+75

END TH 26

SIDELINE CONSTRUCTION

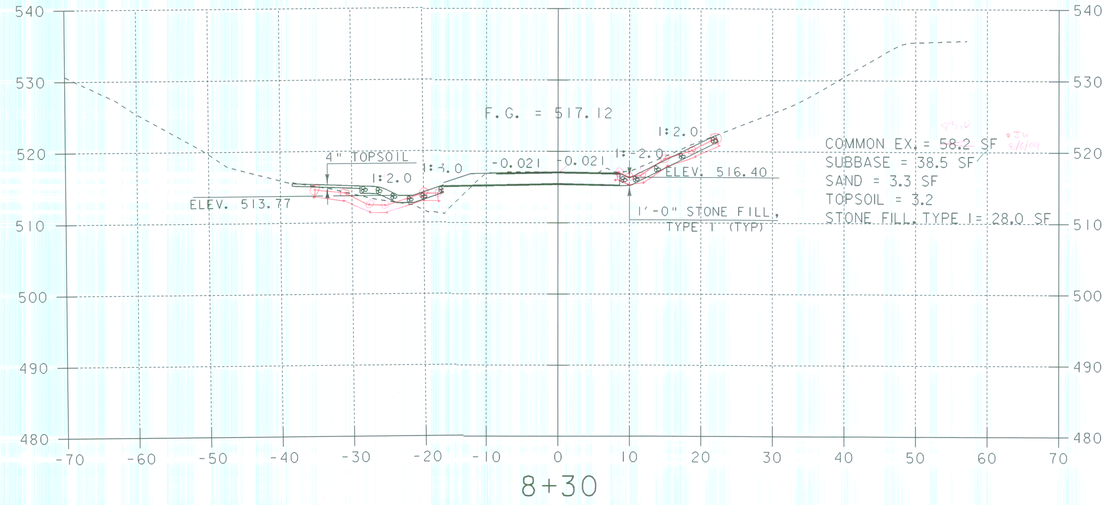

8+30

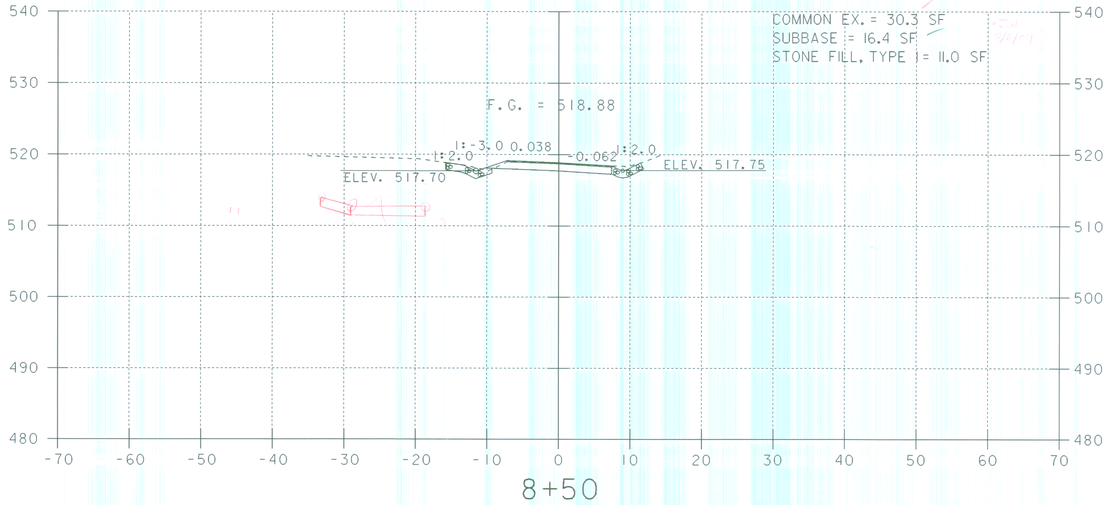

8+50

STA 8+55.0 LT AND RT
END STONE LINED DITCH

SCALE 1" = 10'-0
10 0 10

FURLONG ROAD

SHEET NAME:	TOWN HIGHWAY 26 CROSS SECTIONS		
PROJECT NAME:	POWNAL	HIGHWAY NO.:	TH 24
PROJECT NUMBER:	BRZ 1441(19) C/2	BRIDGE NO.:	41
		OVER:	HOOSIC RIVER
FILE NAME: 87e045/str/se045xs2.dgn		PLOT DATE:	19-FEB-2009
PROJECT MANAGER: R. WHITCOMB		DRAWN BY:	J.GILMORE
DESIGNED BY: C. CARLSON		IPARM NAME:	se045sx7.i
		SHEET	82 OF 108

POWNAL
BRZ 1441(19)

QUANTITIES FOR WWTF
BY: LBB
DATE: 5/29/09

STATION	LENGTH (FT.)	PAVEMENT AREA (SQ. FT.)	PAVEMENT VOLUME (CU. FT.)	SUBBASE AREA (SQ. FT.)	SUBBASE VOLUME (CU. FT.)	SAND AREA (SQ. FT.)	SAND VOLUME (CU. FT.)	TOPSOIL AREA (SQ. FT.)	TOPSOIL VOLUME (CU. FT.)	COMMON EXCAVATION AREA (SQ. FT.)	COMMON EXCAVATION VOLUME (CU. FT.)
5+25		4.7		66.0		20.9		3.8		47.1	
	25		116.3		1336.3		261.3		96.3		742.5
5+50		4.6		40.9		0		3.9		12.3	
	25		115.0		941.3		0		105.0		335.0
5+75		4.6		34.4		0		4.5		14.5	
	25		115.0		862.5		0		112.5		495.0
6+00		4.6		34.6		0		4.5		25.1	
	25		115.0		862.5		0		122.5		712.5
6+25		4.6		34.4		0		5.3		31.9	
	25		115.0		763.8		0		138.8		841.3
6+50		4.6		26.7		0		5.8		35.4	
		TOTALS (CY.)	21.34		176.53		9.68		21.30		115.79

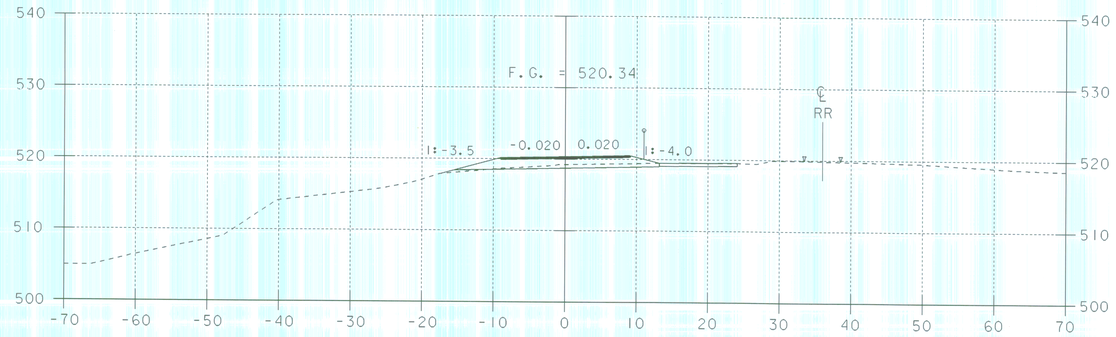

5+75

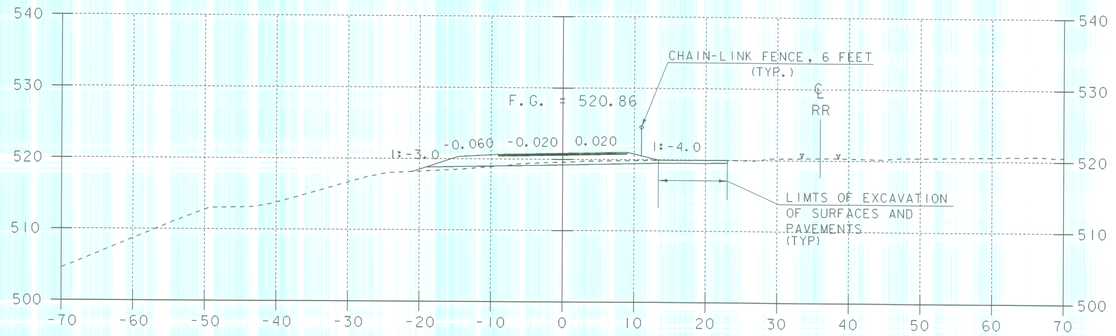

5+50

STA. 5+27.8 RT.
BEGIN CHAIN-LINK FENCE, 6 FEET

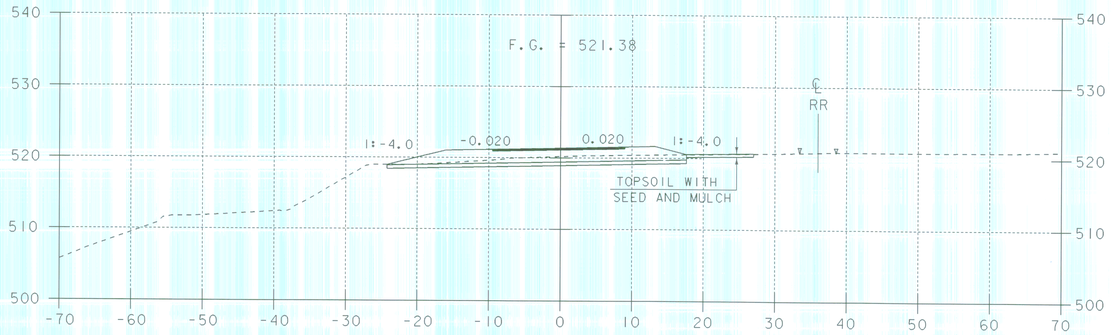

5+25

BEGIN WWTF SIDELINE CONSTRUCTION
STA 5+12

STA. 6+91.3 RT.
END CHAIN-LINK FENCE, 6 FEET

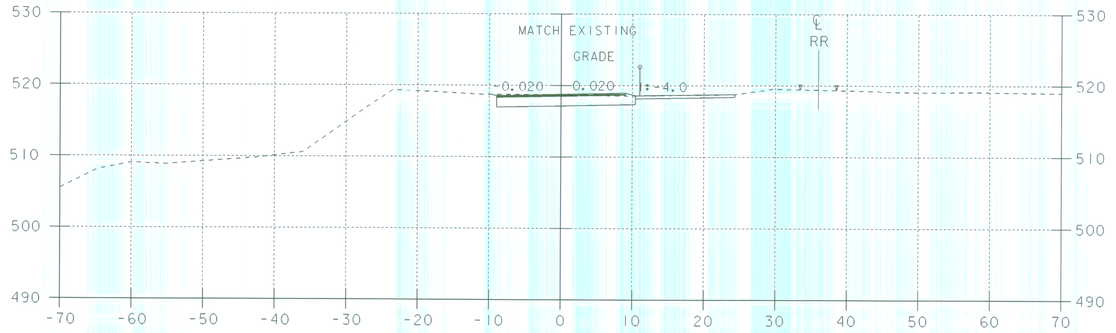

END WWTF SIDELINE CONSTRUCTION
STA 6+50

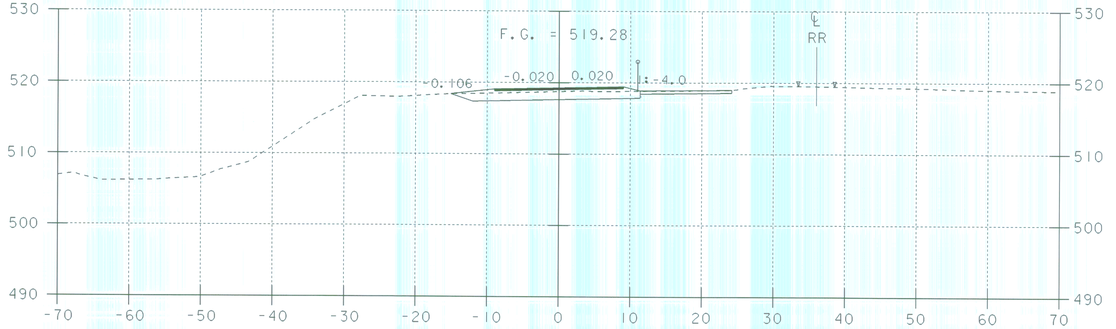

6+25

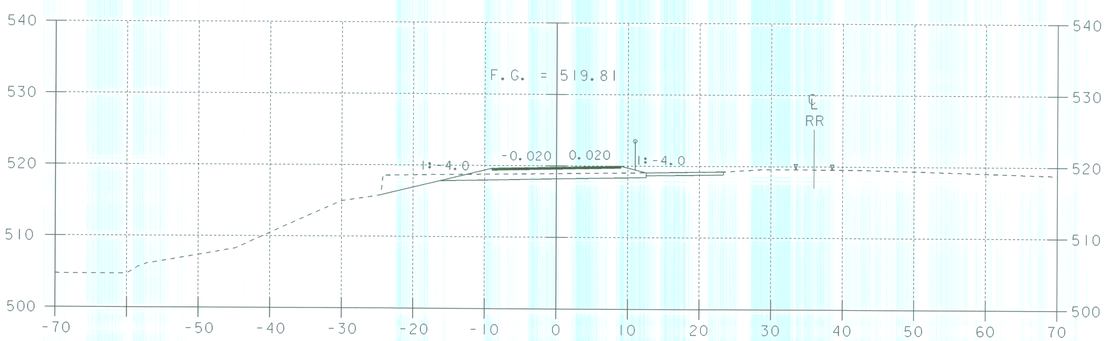

6+00

SCALE 1" = 10'-0
10 0 10

SHEET NAME:	WWTF CROSS SECTIONS		
PROJECT NAME:	POWNAL	HIGHWAY NO.:	TH 24
PROJECT NUMBER:	BRZ 1441(19) C/2	BRIDGE NO.:	41
		OVER:	HOOSIC RIVER
FILE NAME: 87e045/str/se045xs2.dgn		PLOT DATE:	19-FEB-2009
PROJECT MANAGER: R. WHITCOMB		DRAWN BY:	J.GILMORE
DESIGNED BY: C. CARLSON		IPARM NAME:	se045sx8.i
		SHEET	83 OF 108

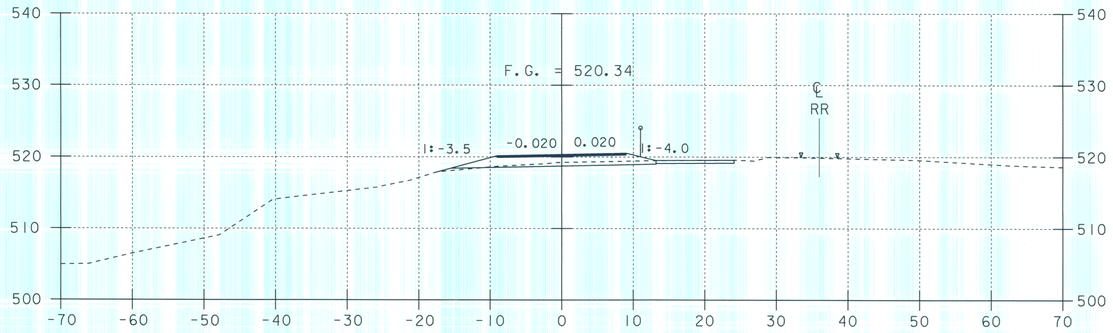

5+75

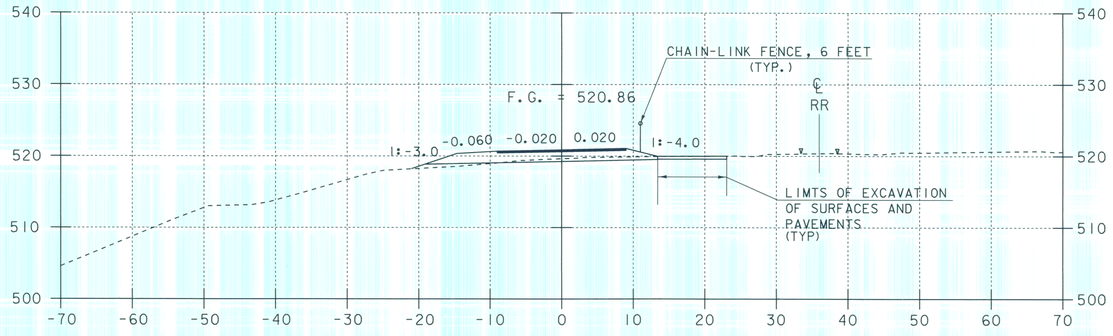

5+50

STA. 5+27.8 RT.
BEGIN CHAIN-LINK FENCE, 6 FEET

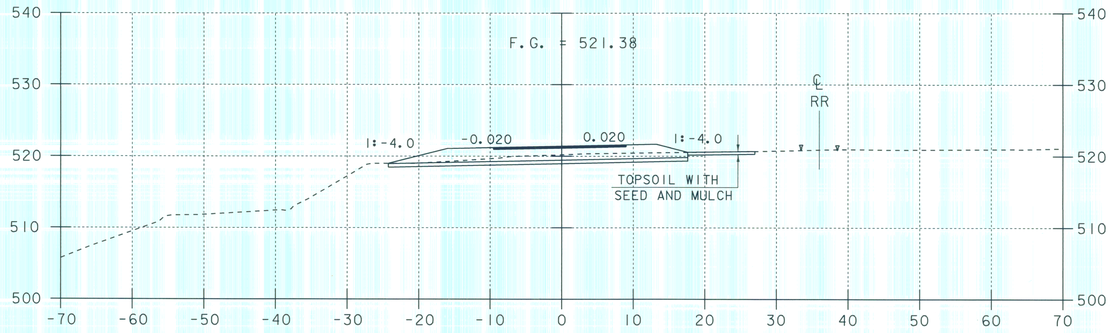

5+25

BEGIN WWTF SIDELINE CONSTRUCTION
STA 5+12

STA. 6+91.3 RT.
END CHAIN-LINK FENCE, 6 FEET

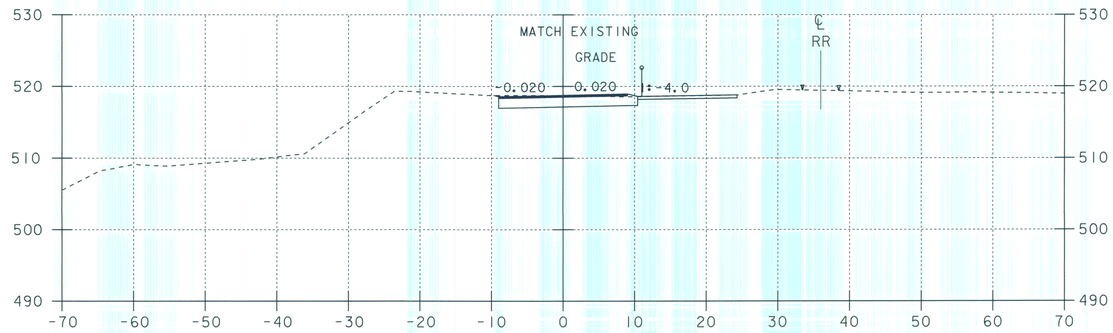

END WWTF SIDELINE CONSTRUCTION
STA 6+50

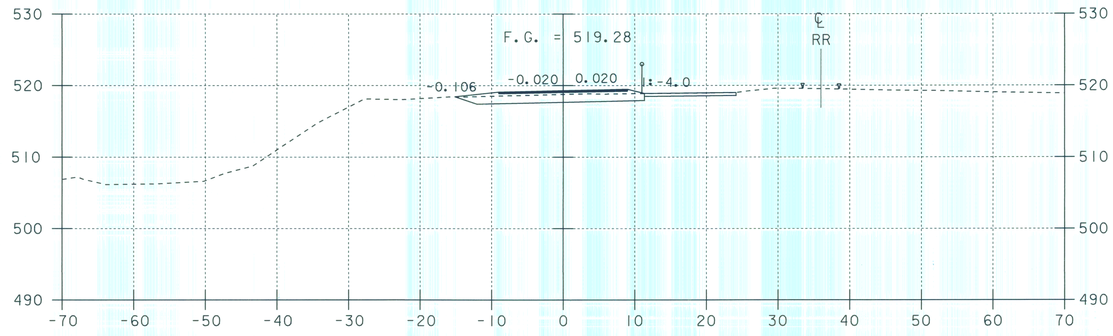

6+25

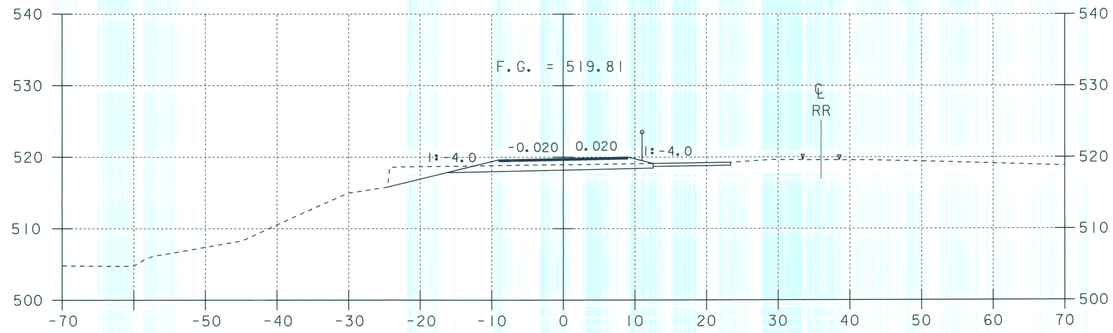

6+00

SCALE 1" = 10'-0
10 0 10

SHEET NAME:	WWTF CROSS SECTIONS		
PROJECT NAME:	POWNAL	HIGHWAY NO.:	TH 24
PROJECT NUMBER:	BRZ 1441(19) C/2	BRIDGE NO.:	41
		OVER:	HOOSIC RIVER
FILE NAME: 87e045/str/se045xs2.dgn		PLOT DATE:	01-JUN-2009
PROJECT MANAGER: R. WHITCOMB		DRAWN BY:	J.GILMORE
DESIGNED BY: C. CARLSON		IPARM NAME:	se045sx8.i
		SHEET 83 OF 108	

VERMONT

State of Vermont
PDD/Structures Design Section
One National Life Drive
Montpelier, VT 05633-5001
www.aot.state.vt.us

Agency of Transportation

[phone] 802-828-2621
[fax] 802-828-3566
[ttd] 800-253-0191

June 10, 2008

D.S. Brown Company
300 E. Cherry Street
North Baltimore, Ohio 45872

Project Name: Pownal **Project #: BRZ 1441(19) C/2**

Structure Identification: TH 24 Over the Hoosic River

The following **"Pot Bearing Details", Item 531.12, "Bearing Device Assembly, Pot",** for the above project (Vendor's Job **#23215-1112**), transmitted by F.W. Whitcomb, Inc. and received by our office on June 3, 2008, have been reviewed and are being returned herewith.

Sheet GN1 is approved "as noted". (Please make appropriate changes as indicated on the "as noted" drawing and submit white prints for our use in the record plans for this project.)

Sheet 1 and the bonding and welding procedures are approved.

The following is in response to your questions:

1. We agree with D.S. Brown and there should be an 1/8" gap between the bottom of the nut and the top of the beveled washer.

2. D.S. Brown is correct and the Vermont Construction specification for the bearing fabric pad should be 731.01.

3. We acknowledge your use of fully threaded anchor bolts in lieu of swedged.

You must provide notice to our fabrication inspector Jeff Clark as to the date fabrication represented by these drawings will begin. Jeff may be contacted by phone at (802)828-0044 or email at jeff.clark@state.vt.us. That notice must be received at least seven days prior to that date, as per Specification 506.03. Any material fabricated prior to the notification date is subject to rejection without further cause.

Sincerely,

Roger R. Whitcomb
Project Manager

Attachments
cc: [X] Resident Engineer Danny Breer -w/prints
[X] F.W. Whitcomb, Inc. – w/prints
[X] Shop Inspector - Jeff Clark w/prints
[X] Materials & Research Section (C&1A Unit) – Letter only
[X] Construction Division - Letter only
[X] Roger R. Whitcomb

VTrans Working to Get You There! Vermont Agency of Transportation

D.S. BROWN
The D.S. Brown Company • 300 East Cherry Street • North Baltimore, Ohio 45872-0158
Phone: (419) 257-3561 • General Fax: (419) 257-2200 • Engineering Fax: (419) 257-0332

The D.S. Brown Company
300 E. Cherry Street
North Baltimore, Ohio 45872
419.257.3561
Fax: 419.257.2200
e-mail: dsb@dsbrown.com
www.dsbrown.com

Lewis Engineering Company
4201 Norex Drive
Chaska, Minnesota 55318
952.368.3000
Fax: 952.448.7000

International Division
57 Pioneer Road
Singapore 628508
65.862.6266
Fax: +65.862.6255
e-mail:
dsbrown@mbox2.singnet.com.sg

Bonding Procedure

The bonding process for laminating PTFE to the fabric pad is as follows:

The fabric pad surface to be bonded is prepared for lamination. A two-part structural grade epoxy is then applied per the manufacture's instructions. The PTFE is cut slightly oversize to account for the possible drift. The PTFE is then applied to the fabric pad and put into a vacuum press at the appropriate pressure for the necessary time period.

Once the fabric pad PTFE is removed from the press, the PTFE is trimmed to plan size and the pads are submitted for quality control review.

VTRANS
RECEIVED
OK'D BY _____ OK'D BY JWC
MAY 30 2008
RESUBMIT _____ APPROVED: ✓
BY RRW DATE 6/9/08

Equal Opportunity Employer

DSBROWN

Production Joint Welding Procedure Specification (D1.5-02)

Procedure No: A-(MC)GF-01 Date Issued: 9-28-04 Revision No: 0 Rev. Date: _____

Contractor (Fabricator) D. S. Brown Company Prepared by: James R. Connor, Quality Assurance Manager

1. Non-Fracture Critical [X] Fracture Critical [ ] WPS Expiration Date: _____
2. Qualified in accordance with: AWS D1.5- 2002 (5.12.1)
   Referenced PQR No(s). PQR-(MC)GMAW-01(04) __ , __ , ____
   Referenced FWST No(s). PQR-(MC)GMAW-FWST-01A(04) , PQR-(MC)GMAW-FWST-01B(04) , __ , __
3. Material specification(s) ASTM A709 Gr. 36, 50, 50W
4. Material Thickness (es) Unlimited
5. Welding process GMAW
6. Manual [ ] , machine [X] , or semiautomatic [X]
7. Position(s) of welding 1F, 2F
8. Filler metal specification AWS A5.18
9. Filler metal class and brand name E70C-6M Corex Metal-Core Maxim
10. Flux class & brand N/A , Type N/A
11. Shielding gas 75% Ar / 25% CO2 Flow rate 45 CFH
12. Single pass [X] Or multiple pass [X]
13. Single arc [X] Or multiple arc [ ]
14. Welding Current DCEP
15. Polarity Reverse
16. Welding progression stringers
17. Root treatment Clean to bright sound metal or per AWS D1.5 (3.2.1 & 3.11)
18. Postheat treatment N/A
19. Calculated Heat Input (KJ/In) Min 30.6 Kj/in Max 51.1 Kj/in
20. Electrode extension (electrical stickout) 3/4"

For DOT Approval
VTRANS RECEIVED
CK'D BY _____ CK'D BY JLK
JUN 0 3 2008
RESUBMIT _____ APPROVED /
BY DATE 6/9/08

Weld size (in)	Pass No(s).	Electrod e Size (in)	Welding Process Variables AMPS/WFS*	VOLTS	Travel Speed (IPM)
**1/4"	1	.052"	265-320	31-34.5	13-16
5/16"	1	.052"	265-320	31-34.5	13-16
3/8"	1-3	.052"	265-320	31-34.5	13-16
7/16"	2-4	.052"	265-320	31-34.5	13-16
1/2"	4-6	.052"	265-320	31-34.5	13-16
5/8"	5-7	.052"	265-320	31-34.5	13-16
3/4"	6-8	.052"	265-320	31-34.5	13-16

Joint Detail (Fillet)
Show all dimensions, weld sizes, passes, and AWS symbols

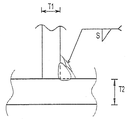

T1 = Varies
T2 = Varies
S = Weld Size

** T1 & T2 equal to or less than 3/4" for 1/4" welds.

* Wire feed speed may be used along with amperage (include chart)

Prepared By: James R. Connor DSB QA Manager

Project: _____

DSB Job: 23215-1112-VT

Preheat and Interpass Temperature Chart

Base Metal Thickness range	Minimum Preheat (°F)	Max Preheat & Interpass (°F)
≤3/4"	50°F	450°F
>3/4" to ≤1.5"	70°F	450°F
>1.5" to ≤2.5"	150°F	450°F
>2.5"	225°F	450°F

Note: When this procedure is used for A709Gr50W materials, it shall be limited to 5/16" single pass or material be coated.

DSBROWN

Production Joint Welding Procedure Specification (D1.5-02)

Procedure No: A-(MC)GSB-01 Date Issued: 9-28-04 Revision No: 0 Rev. Date: _____

Contractor (Fabricator) D. S. Brown Company Prepared by: James R. Connor, Quality Assurance Manager

1. Non-Fracture Critical [X] Fracture Critical [ ] WPS Expiration Date: _____
2. Qualified in accordance with: AWS D1.5- 2002 (5.12.1)
   Referenced PQR No(s). PQR-(MC)GMAW-01(04) __ , __ , ____
   Referenced FWST No(s). PQR-(MC)GMAW-FWST-01A(04) , PQR-(MC)GMAW-FWST-01B(04) , __ , __
3. Material specification(s) ASTM A709 Gr. 36, 50, 50W
4. Material Thickness (es) Unlimited
5. Welding process GMAW
6. Manual [ ] , machine [ ] , or semiautomatic [X]
7. Position(s) of welding 1G, 2G, 1F, 2F
8. Filler metal specification AWS A5.18
9. Filler metal class and brand name E70C-6M Corex Metal-Core Maxim
10. Flux class & brand N/A , Type N/A
11. Shielding gas 75% Ar / 25% CO2 Flow rate 45 CFH
12. Single pass [X] Or multiple pass [X]
13. Single arc [X] Or multiple arc [ ]
14. Welding Current DCEP
15. Polarity Reverse
16. Welding progression stringers
17. Root treatment Clean to bright sound metal or per AWS D1.5 (3.2.1 & 3.11)
18. Postheat treatment N/A
19. Calculated Heat Input (KJ/In) Min 30.6 Kj/in Max 51.1 Kj/in
20. Electrode extension (electrical stickout) 3/4"

For DOT Approval

VTRANS
RECEIVED
CK'D BY _____ CK'D BY JWC
JUN 0 3 2008
RESUBMIT _____ APPROVED ✓
BY DATE 6/9/08

Weld size (In) (FS)	Pass No(s).	Electrode Size (In)	Welding Process Variables AMPS/WFS*	VOLTS	Travel Speed (IPM)
1/4"	1	.052"	265-320	31-34.5	13-16
5/16"	1	.052"	265-320	31-34.5	13-16
3/8"	1-2	.052"	265-320	31-34.5	13-16
1/2"	3-4	.052"	265-320	31-34.5	13-16
5/8"	4-6	.052"	265-320	31-34.5	13-16
3/4"	5-7	.052"	265-320	31-34.5	13-16
7/8"	6-9	.052"	265-320	31-34.5	13-16
1"	7-10	.052"	265-320	31-34.5	13-16

Joint Detail (TC-P4-GF)
Show all dimensions, weld sizes, passes, and AWS symbols

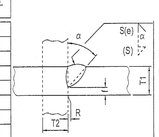

T1 = ¼" min.
T2 = Varies
(E) = S-1/8"
f = 1/8" min.
R = 0
α = 45°
S = size groove
(S) = size of reinforcing fillet(if required) not to exceed ¼" in corner & T jts.

For Butt Joints see AWS 2.14

* Wire feed speed may be used along with amperage (include chart)

Prepared By: James R. Connor DSB QA Manager

Project: _____

DSB Job: 23215-1112-VT

Preheat and Interpass Temperature Chart

Base Metal Thickness range	Minimum Preheat (°F)	Max Preheat & Interpass (°F)
≤3/4"	50°F	450°F
>3/4" to ≤1.5"	70°F	450°F
>1.5" to ≤2.5"	150°F	450°F
>2.5"	225°F	450°F

Note: When this procedure is used for A709Gr50W materials, it shall be limited to 5/16" single pass or material be coated.

DSBROWN

Production Joint Welding Procedure Specification (D1.5-02)

Procedure No: A-GTF-01 Date Issued: 1-9-04 Revision No: 0 Rev. Date: _____

Contractor (Fabricator) D.S. Brown Company Prepared by: James R. Connor, Quality Assurance Manager

1. Non-Fracture Critical [X] Fracture Critical [ ] WPS Expiration Date: _____
2. Qualified in accordance with: AWS D1.5- 2002 , AWS D1.6-99
   Referenced PQR No(s). PQR-GTAW-01-(03) __ , __ , ____
   Referenced FWST No(s). PQR-GTAW-01(03) , _____ , __ , ____
3. Material specification(s) ASTM A709 Gr. 36, 50, 50W, 304SS, 316SS
4. Material Thickness (es) Unlimited
5. Welding process GTAW
6. Manual [X] , machine [ ] , or semiautomatic [ ]
7. Position(s) of welding 1F, 2F
8. Filler metal specification AWS A5.9
9. Filler metal class and brand name ER309L (Murrex)
10. Flux class & brand N/A , Type N/A
11. Shielding gas 100% Argon Flow rate 20 CFH
12. Single pass [X] Or multiple pass [ ]
13. Single arc [X] Or multiple arc [ ]
14. Welding Current DCEN
15. Polarity Straight
16. Welding progression stringers
17. Root treatment Clean to bright sound metal or per AWS D1.5 (3.2.1 & 3.11)
18. Postheat treatment N/A
19. Calculated Heat Input (KJ/In) Min 10.9 KJ Max 20.4 KJ
20. Electrode extension (electrical stickout) N/A

For DOT Approval

VTRANS RECEIVED JUN 03 2008

OK'D BY _____ OK'D BY Jww

RESUBMIT _____ APPROVED ✓

BY _____ DATE 6/9/08

Weld size (In)	Pass No(s)	Electrode Size (In)	Welding Process Variables AMPS/WFS*	Welding Process Variables VOLTS	Travel Speed (IPM)
20 ga.	1	1/8"	170-200	15-17	10-14
16 ga.	1	1/8"	170-200	15-17	10-14
14 ga.	1	1/8"	170-200	15-17	10-14
12 ga.	1	1/8"	170-200	15-17	10-14
11 ga.	1	1/8"	170-200	15-17	10-14
10 ga.	1	1/8"	170-200	15-17	10-14
8 ga.	1	1/8"	170-200	15-17	10-14
3/16"	1	1/8"	170-200	15-17	10-14

Joint Detail (Flare Bevel)
Show all dimensions, weld sizes, passes, and AWS symbols

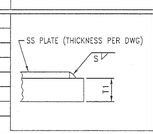

T_1 = Varies
S = Fillet Weld Size (Fillet weld must not exceed thickness of stainless steel)

* Wire feed speed may be used along with amperage (include chart)

Prepared By: James R. Connor DSB QA Manager

Project: _____

DSB Job: 23215-1112-VT

Preheat and Interpass Temperature Chart

Base Metal Thickness range	Minimum Preheat (°F)	Max Preheat & Interpass (°F)
≤3/4"	50°F	450°F
>3/4" to ≤1.5"	70°F	450°F
>1.5" to ≤2.5"	150°F	450°F
>2.5"	225°F	450°F

Note: When this procedure is used for A709Gr50W materials, it shall be limited to 5/16" single pass or material be coated.

DSBROWN

Production Joint Welding Procedure Specification (D1.5-02)

Procedure No: A-(MC)GSB-01 Date Issued: 9-28-04 Revision No: 0 Rev. Date: _____

Contractor (Fabricator) D. S. Brown Company Prepared by: James R. Connor, Quality Assurance Manager

1. Non-Fracture Critical [X] Fracture Critical [ ] WPS Expiration Date: _____
2. Qualified in accordance with: AWS D1.5- 2002 (5.12.1)
   Referenced PQR No(s). PQR-(MC)GMAW-01(04) __ , __ , ____
   Referenced FWST No(s). PQR-(MC)GMAW-FWST-01A(04) , PQR-(MC)GMAW-FWST-01B(04) , __ , __
3. Material specification(s) ASTM A709 Gr. 36, 50, 50W
4. Material Thickness (es) Unlimited
5. Welding process GMAW
6. Manual [ ] , machine [ ] , or semiautomatic [X]
7. Position(s) of welding 1G, 2G, 1F, 2F
8. Filler metal specification AWS A5.18
9. Filler metal class and brand name E70C-6M Corex Metal-Core Maxim
10. Flux class & brand N/A , Type N/A
11. Shielding gas 75% Ar / 25% CO2 Flow rate 45 CFH
12. Single pass [X] Or multiple pass [X]
13. Single arc [X] Or multiple arc [ ]
14. Welding Current DCEP
15. Polarity Reverse
16. Welding progression stringers
17. Root treatment Clean to bright sound metal or per AWS D1.5 (3.2.1 & 3.11)
18. Postheat treatment N/A
19. Calculated Heat Input (KJ/In) Min 30.6 Kj/in Max 51.1 Kj/in
20. Electrode extension (electrical stickout) 3/4"

For DOT Approval

VTRANS
RECEIVED
CK'D BY _____ CK'D BY JWC
JUN 0 3 2008
RESUBMIT _____ APPROVED ✓
BY DATE 6/9/08

Weld size (in) (E)&(S)	Pass No(s).	Electrode Size (in)	Welding Process Variables AMPS/WFS*	VOLTS	Travel Speed (IPM)
1/4"	1	.052"	265-320	31-34.5	13-16
5/16"	1	.052"	265-320	31-34.5	13-16
3/8"	1-2	.052"	265-320	31-34.5	13-16
1/2"	3-4	.052"	265-320	31-34.5	13-16
5/8"	4-6	.052"	265-320	31-34.5	13-16
3/4"	5-7	.052"	265-320	31-34.5	13-16
7/8"	6-9	.052"	265-320	31-34.5	13-16
1"	7-10	.052"	265-320	31-34.5	13-16

Joint Detail (TC-P4-GF)
Show all dimensions, weld sizes, passes, and AWS symbols

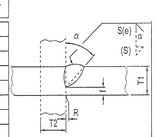

T1 = ¼" min.
T2 = Varies
(E) = S-1/8"
f = 1/8" min.
R = 0
α = 45°
S = size groove
(S) = size of reinforcing fillet(if required) not to exceed ¼" in corner & T jts.

For Butt Joints see AWS 2.14

* Wire feed speed may be used along with amperage (include chart)

Prepared By: James R. Connor DSB QA Manager

Project: _____

DSB Job: 23215-1112-VT

Preheat and Interpass Temperature Chart

Base Metal Thickness range	Minimum Preheat (°F)	Max Preheat & Interpass (°F)
≤3/4"	50°F	450°F
>3/4" to ≤1.5"	70°F	450°F
>1.5" to ≤2.5"	150°F	450°F
>2.5"	225°F	450°F

Note: When this procedure is used for A709Gr50W materials, it shall be limited to 5/16" single pass or material be coated.

DSBROWN

Production Joint Welding Procedure Specification (D1.5-02)

Procedure No: B-FF-01 Date Issued: 3-28-08 Revision No: 0 Rev. Date: _____

Contractor (Fabricator) D. S. Brown Company Prepared by: Brad Streeter, Quality Assurance Manager

1. Non-Fracture Critical [X] Fracture Critical [ ] WPS Expiration Date: _____
2. Qualified in accordance with: AWS D1.5- 2002 (5.12.1)
   Referenced PQR No(s). PQR-FCAW-01-(08) __ , __ , ____
   Referenced FWST No(s). N/A , N/A , __ , ____
3. Material specification(s) ASTM A709 Gr. 36, 50, 50W
4. Material Thickness (es) Unlimited
5. Welding process FCAW
6. Manual [ ] , machine [ ] , or semiautomatic [X]
7. Position(s) of welding 1F, 2F
8. Filler metal specification AWS A5.20
9. Filler metal class and brand name E71T-1CH8 (UltraCore71C).
10. Flux class & brand N/A , Type N/A
11. Shielding gas 100% CO2 Flow rate 45 CFH
12. Single pass [X] Or multiple pass [X]
13. Single arc [X] Or multiple arc [ ]
14. Welding Current DCEP
15. Polarity Reverse
16. Welding progression stringers
17. Root treatment Clean to bright sound metal or per AWS D1.5 (3.2.1 & 3.11)
18. Postheat treatment N/A
19. Calculated Heat Input (KJ/In) Min 31.20 Kj/in Max 50.72 Kj/in
20. Electrode extension (electrical stickout) 3/4"

For DOT Approval

VTRANS RECEIVED
JUN 0 3 2008

CK'D BY _____ OK'D BY JWC

RESUBMIT _____ APPROVED _____

BY _____ DATE 6/3/08

Weld size (in)	Pass No(s)	Electrode Size (in)	Welding Process Variables AMPS/WPS*	VOLTS	Travel Speed (IPM)
**1/4"	1	1/16"	260-310	26-30	11-13
5/16"	1	1/16"	260-310	26-30	11-13
3/8"	2-3	1/16"	260-310	26-30	11-13
7/16"	3-5	1/16"	260-310	26-30	11-13
1/2"	4-6	1/16"	260-310	26-30	11-13
5/8"	5-7	1/16"	260-310	26-30	11-13
3/4"	6-8	1/16"	260-310	26-30	11-13

Joint Detail (Fillet)

Show all dimensions, weld sizes, passes, and AWS symbols

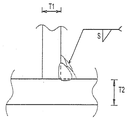

T1 = Varies
T2 = Varies
S = Weld Size

** T1 & T2 equal to or less than 3/4" for 1/4" welds.

* Wire feed speed may be used along with amperage (include chart)

Prepared By: _____ DSB QA Manager

Project: _____

DSB Job: 23215-1112-VT

Preheat and Interpass Temperature Chart

Base Metal Thickness range	Minimum Preheat (°F)	Max Preheat & Interpass (°F)
≤3/4"	50°F	450°F
>3/4" to ≤1.5"	70°F	450°F
>1.5" to ≤2.5"	150°F	450°F
>2.5"	225°F	450°F

Note: When this procedure is used for A709Gr50W materials, it shall be limited to 5/16" single pass or material be coated.

DSBROWN

Production Joint Welding Procedure Specification (D1.5-02)

Procedure No: B-FSB-01 Date Issued: 3-28-08 Revision No: 0 Rev. Date: _____

Contractor (Fabricator) D. S. Brown Company Prepared by: Brad Streeter, Quality Assurance Manager

1. Non-Fracture Critical [X] Fracture Critical [ ] WPS Expiration Date: _____
2. Qualified in accordance with: AWS D1.5- 2002 (5.12.1)
   Referenced PQR No(s). PQR-FCAW-01-(08) __ , __ , ____
   Referenced FWST No(s). N/A , N/A , __ , __
3. Material specification(s) ASTM A709 Gr. 36, 50, 50W
4. Material Thickness (es) Unlimited
5. Welding process FCAW
6. Manual [ ] , machine [ ] , or semiautomatic [X]
7. Position(s) of welding 3G
8. Filler metal specification AWS A5.20
9. Filler metal class and brand name E71T-1CH8 (UltraCore71C)
10. Flux class & brand N/A , Type N/A
11. Shielding gas 100% CO2 Flow rate 45 CFH
12. Single pass [X] Or multiple pass [X]
13. Single arc [X] Or multiple arc [ ]
14. Welding Current DCEP
15. Polarity Reverse
16. Welding progression Stringers
17. Root treatment Clean to bright sound metal or per AWS D1.5 (3.2.1 & 3.11)
18. Postheat treatment N/A
19. Calculated Heat Input (KJ/In) Min 31.20 Kj/in Max 50.72 Kj/in
20. Electrode extension (electrical stickout) 3/4"

For DOT Approval

VTRANS
RECEIVED
CK'D BY _____ CK'D BY JUC
JUN 0 3 2008
RESUBMIT _____ APPROVED ✓
BY _____ DATE 6/9/08

Weld size (In) (E)&(S)	Pass No(s).	Electrode Size (In)	Welding Process Variables AMPS/WFS*	Welding Process Variables VOLTS	Travel Speed (IPM)
1/4"	1	1/16"	260-310	26-30	11-13
5/16"	1	1/16"	260-310	26-30	11-13
3/8"	2-3	1/16"	260-310	26-30	11-13
1/2"	3-4	1/16"	260-310	26-30	11-13
5/8"	4-6	1/16"	260-310	26-30	11-13
3/4"	5-7	1/16"	260-310	26-30	11-13
7/8"	6-8	1/16"	260-310	26-30	11-13
1"	7-9	1/16"	260-310	26-30	11-13

Joint Detail (TC-P4-GF)
Show all dimensions, weld sizes, passes, and AWS symbols

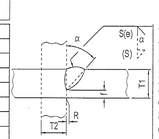

T1 = ¼" min.
T2 = Varies
(E) = S-1/8"
f = 1/8" min.
R = 0
α = 45°
S = size groove
(S) = size of reinforcing fillet(if required) not to exceed ¼" in corner & T jts.

For Butt Joints see AWS 2.14

* Wire feed speed may be used along with amperage (include chart)

Prepared By: _____ DSB QA Manager

Project: _____

DSB Job: 23215-1112-VT

Preheat and Interpass Temperature Chart

Base Metal Thickness range	Minimum Preheat (°F)	Max Preheat & Interpass (°F)
≤3/4"	50°F	450°F
>3/4" to ≤1.5"	70°F	450°F
>1.5" to ≤2.5"	150°F	450°F
>2.5"	225°F	450°F

Note: When this procedure is used for A709Gr50W materials, it shall be limited to 5/16" single pass or material be coated.

GENERAL NOTES:

1. MATERIALS AND WORKMANSHIP SHALL BE IN ACCORDANCE WITH AASHTO STANDARD SPECIFICATIONS FOR HIGHWAY BRIDGES [SECTION 14 (DIVISION I) AND SECTION 18 (DIVISION II)]; ANSI/AASHTO/AWS D1.5:~~2002~~ 2008 BRIDGE WELDING CODE AND THE STATE OF VERMONT STANDARD SPECIFICATIONS FOR CONSTRUCTION DATED 2006.

2. PTFE SHALL BE VIRGIN, UNFILLED POLYTETRAFLUOROETHYLENE. GUIDE BAR PTFE SHALL BE PIGMENTED. THE PTFE RESIN SHALL CONFORM TO THE REQUIREMENTS OF ASTM D4894.

3. PTFE IS TO BE PURCHASED ETCHED ON ONE SIDE FOR BONDING INTO MACHINED RECESS. STEEL MATING SURFACES OF PTFE AND STEEL SHALL BE GRIT BLASTED AND DEGREASED PRIOR TO APPLICATION OF ADHESIVE. ADHESIVE SHALL BE APPLIED USING DIRECTIONS SUPPLIED BY THE ADHESIVE MANUFACTURER.

4. STAINLESS STEEL SHALL CONFORM TO ASTM A240 – TYPE 304 AND SHALL BE 11 GA. (0.120"). STAINLESS STEEL SLIDING SURFACES IN CONTACT WITH PTFE SHALL HAVE A NO. 8 MIRROR FINISH AND ALL OTHERS SHALL HAVE A 2B FINISH.

5. WELDING SHALL CONFORM TO AWS-D1.5:~~2002~~ 2008 BRIDGE WELDING CODE, AS WELL AS ANY STATE STANDARD OR PROJECT SPECIAL PROVISION.

6. THE TOP AND BOTTOM OF THE NEOPRENE DISC SHALL BE LUBRICATED WITH DOW CORNING #4 SILICONE COMPOUND.

7. ALL SHARP CORNERS OF STEEL MATERIALS SHALL BE REMOVED BY GRINDING OR SANDING.

8. THE BRASS SEALING RING ENDS SHALL BE CUT AT AN ANGLE OF 45° WITH A MAXIMUM GAP OF 0.050". THE RINGS SHALL BE STAGGERED 120° APART USING A QUANTITY OF THREE (3) RINGS.

9. EACH BEARING SHALL BE MARKED WITH THE MANUFACTURER'S NAME, THE BEARING TYPE OR MODEL NUMBER, THE BEARING NUMBER AND LOT NUMBER, AND THE INSTALLED LOCATION. THE MARKING SHALL BE PERMANENT AND IN A LOCATION THAT WILL BE VISIBLE AFTER ERECTION OF STRUCTURE.

10. EACH NON-FIXED BEARING SHALL HAVE MARKS PLACED ON THE SIDE OF THE MASONRY PLATE AND SOLE PLATE TO INDICATE THE LOCATION OF THE CENTERLINE. THIS MARK CAN BE USED IN THE FIELD TO DETERMINE THE INITIAL OFFSET LOCATION OF THE SLIDE PLATE, IF APPLICABLE. THE MARKS SHALL BE MADE IN INDELIBLE INK AND SHALL BE VISIBLE AFTER BEARING INSTALLATION.

11. BEARINGS ARE TO BE SHIPPED AS COMPLETE UNITS, STEEL BANDED, AND SHALL BE WRAPPED TO PROTECT FROM MOISTURE AND DIRT DURING TRANSIT AND STORAGE. BEARINGS SHALL BE STORED IN A CLEAN, DRY, LEVEL UPRIGHT POSITION WHILE AT JOBSITE. BEARINGS SHALL BE LIFTED FROM THEIR UNDERSIDES ONLY.

12. AT NO TIME MAY THE BEARINGS BE DISASSEMBLED WITHOUT AUTHORIZATION FROM D.S. BROWN OR WITHOUT THE PRESENCE OF A D.S. BROWN REPRESENTATIVE.

13. MARK THE THICKER EDGE OF THE SOLE PLATE AS SUCH FOR THE PURPOSE OF FIELD IDENTIFICATION. PLACE MARK ON THE EDGE OF THE SOLE PLATE SO THAT IT WILL BE VISIBLE AFTER BEARING INSTALLATION.

14. THE DS BROWN COMPANY MAY SUBSTITUTE A709 GR 50W (A588) FOR A709 GR50 (A572) DUE TO AVAILABILITY AT NO ADDITIONAL COST TO THE OWNER OR CONTRACTOR.

15. VERSIFLEX HLMR "POT" STYLE BEARING MANUFACTURING FACILITY AND REPRESENTATIVE FOR COORDINATING PRODUCTION:
THE D.S. BROWN COMPANY
300 EAST CHERRY STREET
NORTH BALTIMORE, OHIO 45872
CSR – JAMIE SCHROEDER (419) 257-3561

CONTRACTOR NOTES:

1. THE EXPANSION BEARINGS WILL BE SHIPPED CENTERED, AND IT SHALL BE THE RESPONSIBILITY OF THE CONTRACTOR TO OFFSET THE SLIDE PLATES IN THE FIELD DURING INSTALLATION. REFER TO CONTRACT DRAWING SHEET 45 OF 108 FOR INITIAL OFFSETS.

2. WELDING PROCEDURES SHALL BE ESTABLISHED BY THE CONTRACTOR TO RESTRICT THE TEMPERATURE TO A MAXIMUM OF 250°F (121°C) FOR SURFACES IN CONTACT WITH THE ELASTOMER AND 300° (149°C) FOR SURFACES IN CONTACT WITH PTFE. TEMPERATURES SHALL BE DETERMINED BY TEMPERATURE INDICATING WAX PENCILS OR OTHER SUITABLE MEANS. DURING FIELD WELDING, NO WELDING CURRENT SHALL BE PERMITTED TO PASS BETWEEN POT AND PISTON COMPONENTS.

SAMPLING AND TESTING NOTES:

ELASTOMERIC DISCS SHALL BE SUBJECTED TO RANDOM IN-HOUSE TESTING OF THE APPLICABLE PHYSICAL PROPERTIES PER AASHTO DIVISION 2, SECTION 18.

BEARINGS SHALL BE SUBJECTED TO THE TESTS DESCRIBED BELOW AND IN ACCORDANCE WITH THE APPLICABLE AASHTO SPECIFICATIONS.

1. SAMPLE TEST – ONE (1) BEARING PER "LOT" SHALL BE TESTED AND SHALL BE CHOSEN AT RANDOM. A "LOT" SHALL CONSIST OF ONE OF THE FOLLOWING:
(1) NO MORE THAN 10 FIXED BEARINGS OF ONE "LOAD CATEGORY"
(2) NO MORE THAN 10 EXPANSION BEARINGS OF ONE "LOAD CATEGORY"
ONE LOAD CATEGORY MAY CONSIST OF BEARINGS OF A DIFFERING VERTICAL LOAD CAPACITY BUT THE BEARINGS MAY NOT EXCEED A RANGE OF CAPACITY DIFFERING BY MORE THAN 300 KIPS.

2. PROCEDURE FOR TESTING EXPANSION BEARINGS–
   a.) LOAD THE BEARING WITH ITS DESIGN LOADING FOR AT LEAST 12 HOURS. MEASURE THE FORCE REQUIRED FOR THE FIRST MOVEMENT AND CALCULATE THE COEFFICIENT OF FRICTION. MEASURE THE FORCE REQUIRED FOR MOVEMENT UNDER DYNAMIC LOADING AND CALCULATE THE COEFFICIENT OF FRICTION.
   b.) LOAD THE BEARING AT 70% OF THE DESIGN LOAD BUT NOT LESS THAN 2000 PSI. MEASURE THE STATIC AND DYNAMIC COEFFICIENTS OF FRICTION [70% OF DESIGN LOAD = 282.1 KIPS = 2.44 KSI].
   c.) LOAD THE BEARING AT 150% OF THE DESIGN LOAD FOR 30 MINUTES, AT A 2% ROTATION, AND SUBJECT THE BEARING TO 100 CYCLES OF MOVEMENT, MEASURE THE STATIC AND DYNAMIC COEFFICIENTS OF FRICTION.
   d.) COEFFICIENTS OF FRICTION SHALL BE LESS THAN 4%.

3. AFTER PERFORMING EACH TEST DESCRIBED IN (2) ABOVE, DISASSEMBLE THE BEARING AND INSPECT FOR:
   a.) ANY SIGN OF SEALING FAILURE.
   b.) ANY SIGN OF MATERIAL FAILURE.
   c.) ANY OTHER DEFECTS.

TOLERANCES:

EXCEPT AS NOTED BELOW, THE DIMENSIONAL TOLERANCES AND SURFACE FINISHES OF THE BEARING SHALL SATISFY THE REQUIREMENTS OF AASHTO, DIVISION II, SECTION 18, TABLE 18.5.1.5-1.

1. DIMENSIONS (LENGTH, WIDTH, THICKNESS, HOLE LOCATIONS AND POSITION OF WELDED COMPONENTS). THE TOLERANCE SHALL BE ± 0.063".

2. FLATNESS
   a.) SOLE PLATE – BEARING SURFACES SHALL BE FLAT WITH MAXIMUM PERMISSIBLE VARIATION OF 0.01" FROM A PLANE DETERMINED BY ANY THREE CORNERS OF THE PLATES.
   b.) MASONRY PLATE – BEARING SURFACES SHALL BE FLAT WITH MAXIMUM PERMISSIBLE VARIATION OF 0.04" FROM A PLANE DETERMINED BY ANY THREE CORNERS OF THE PLATE.
   c.) SLIDING SURFACES – FOR STAINLESS STEEL MATING WITH PTFE BONDED TO STEEL, THE TOLERANCE SHALL BE THE "NOMINAL DIMENSION" IN INCHES TIMES 0.0005. THE "NOMINAL DIMENSION" SHALL BE THE DISTANCE BETWEEN ANY DIAGONAL CORNERS OR OPPOSITE EDGES OF THE BEARING SURFACE. THE TOLERANCE IS APPLICABLE TO BOTH SURFACES.

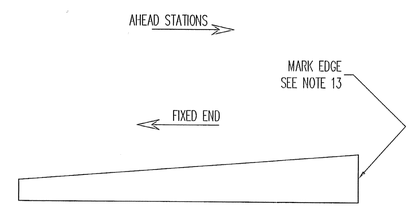

SOLE PLATE EDGE DETAIL

PROTECTIVE COATING NOTES:

1. ALL MILL SCALE SHALL BE REMOVED FROM BEARINGS BY BLASTING (SSPC-SP10) PRIOR TO APPLYING PROTECTIVE COATING.

2. METALIZATION SHALL BE IN ACCORDANCE WITH ANSI/AWS C2.18-93. EXTERNAL STEEL SURFACES SHALL BE METALIZED TO A MINIMUM THICKNESS OF 6 MILS. THE INSIDE OF THE POT, TOP OF PISTON, AND THE P.F.W. SHALL BE METALIZED TO A MINIMUM COATING THICKNESS OF 2 MILS AND BE POLISHED TO 125 MICROINCHES AFTER METALIZING. PROVIDE WIRE MATERIAL FOR THE METALIZED PRIMER CONSISTING OF PURE ZINC (99.9% PURITY).

3. WITHIN 8 HOURS AFTER METALIZATION, THE EXTERNAL STEEL SURFACES SHALL RECEIVE A SEAL COAT IN ACCORDANCE WITH THE MAUFACTURER'S RECOMENDATIONS.
SEAL COAT = CARBOLINE RUSTBOND, D.F.T. = 2 MILS MIN.

4. SEE COATING LIMIT DETAILS FOR COATING LOCATIONS.

5. PRIOR TO METALIZING ALL CORNERS AND EDGES OF THE STEEL PLATES, SHAPES, ETC., SHALL BE GROUND TO 1/16" RADIUS.

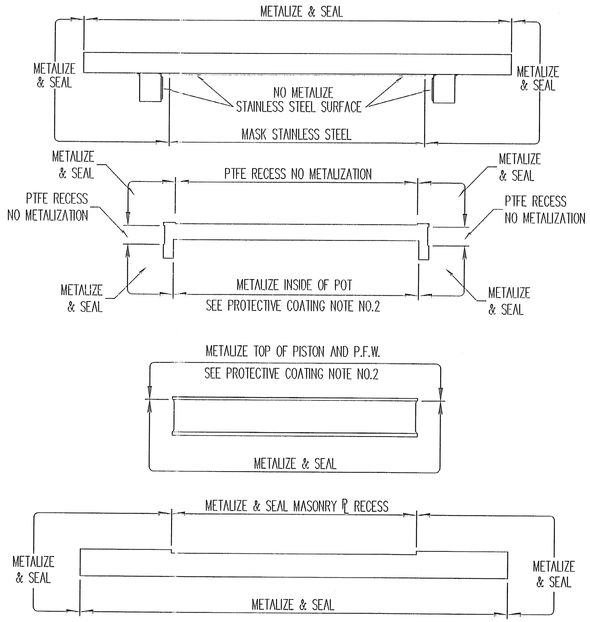

UNI-DIRECTIONAL VERSIFLEX HLMR COATING LIMITS

RECEIVED
CK'D BY WPK CK'D BY CWC
JUN 03 2008
RESUBMIT _____ APPROVED AS NOTED
BY RKW DATE 6-9-08

REV.	DESCRIPTION	DATE	DET.	CK'D.

D.S. BROWN

THE D.S. BROWN COMPANY
300 E. CHERRY STREET
NORTH BALTIMORE, OHIO 45872
419.257.3561
FAX: 419.257.0332
WWW.DSBROWN.COM

ITEM	QUANTITY
LOCATION — TH 24 OVER HOOSIC RIVER	–
BRIDGE — 41	–
PROJECT — POWNAL, BRZ 1441(19) C/2	–
—	–
P.O. NO. — 84934	–
DESIGNER — VERMONT AGENCY OF TRANSPORTATION	–
CUSTOMER — FRANK W. WHITCOMB CONSTRUCTION CORP.	–
	–

DESCRIPTION: GENERAL NOTES AND COATING LIMITS
BENNINGTON CO., VT

SCALE:	DRAWN BY:	CHECKED BY:	DATE:	
N.T.S.	SP	PMG	5/08	–
PROJECT NUMBER	PRODUCT CODE	RELEASE	SHEET	
23215	1112	1	GN1	

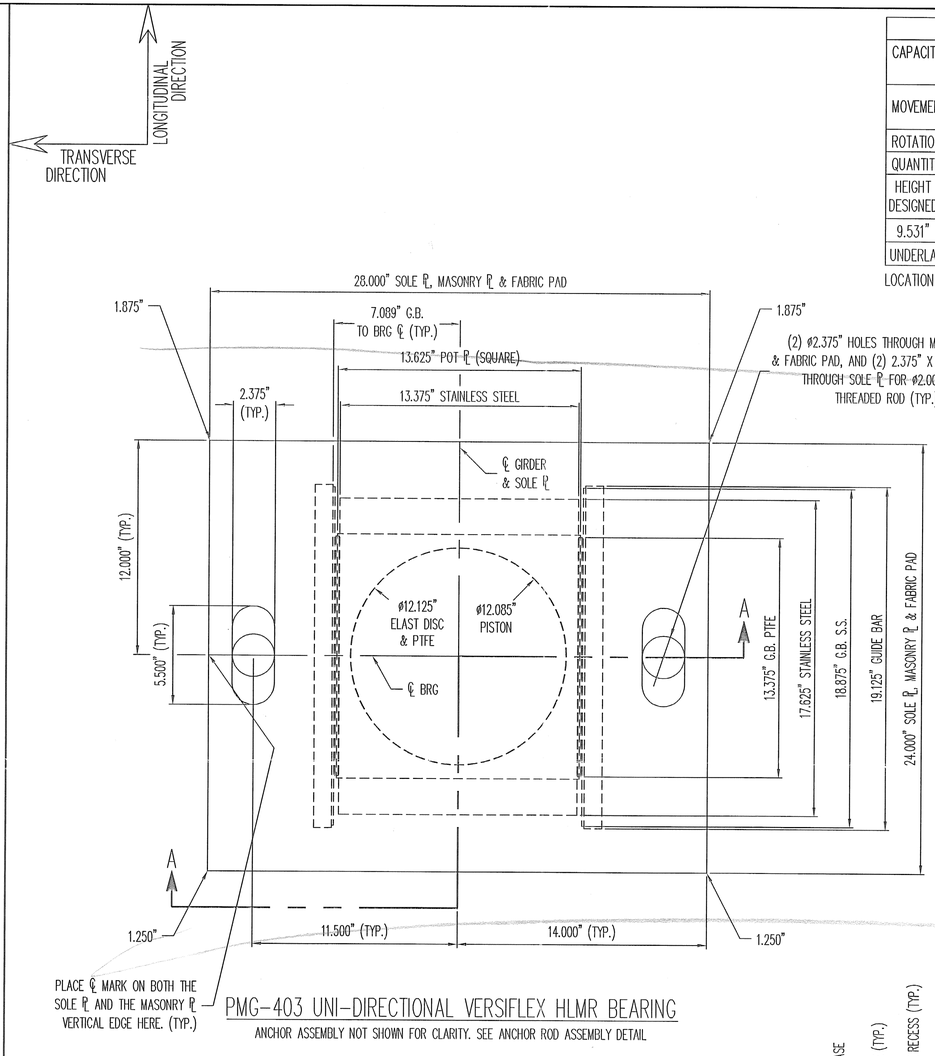

PMG–403 UNI–DIRECTIONAL VERSIFLEX HLMR BEARING

ANCHOR ASSEMBLY NOT SHOWN FOR CLARITY. SEE ANCHOR ROD ASSEMBLY DETAIL

PMG–403		
CAPACITY	VERTICAL	403.0 k
	HORIZONTAL	56.6 k
MOVEMENT	LONGITUDINAL	3.500"
	TRANSVERSE	0
ROTATION	0.03 RADIANS	
QUANTITY	5	
HEIGHT DESIGNED	HEIGHT IN PLANS	DIFFERENCE
9.531"	10.688"	–1.157"
UNDERLAYMENT INC IN H (Y/N) ?		Y

LOCATION: PIER

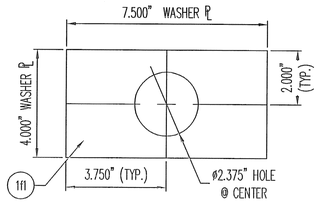

PLAN VIEW
WASHER PLATE

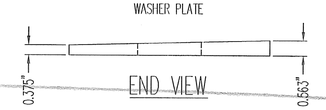

END VIEW

PLEASE VERIFY. CONTRACT PLANS SPECIFY SECTION 731.02 WHICH IS "RESERVED". THE DS BROWN CO WILL SUPPLY AS NOTED UNLESS MARKED OTHERWISE.

MK	QTY.	DESCRIPTION	MATERIAL	LENGTH	REMARKS	PART NO.
1A	5	PMG–403				
1a1	5	1.250" X 12.125"ø	NEOPRENE		50+/–5 DURO GR.3	
1a2	15	0.094" X 0.375" X 12.125"ø	B36 HALF–HARD		PLAIN	
1a3	5	0.188" X 12.125"ø	PTFE		PURE VIRGIN UNFILLED	
1a4	10	0.188" X 1.000"	GB PTFE	13.375"	PIGMENTED	
1a5	5	11 GA. X 13.375"	A240 T304, ƒ8 & 2B	17.625"	PLAIN	
1a6	10	11 GA. X 1.250"	A240 T304, ƒ8 & 2B	18.875"	PLAIN	
1gb1	10	1.750" X 1.000"	A709 GR 50 OR 50W	19.125"	METALIZE, SEAL	
1mp1	5	2.750" X 28.000"	A709 GR 50 OR 50W	24.000"	METALIZE, SEAL	
1ps1	5	2.320" X 12.085"ø	A709 GR 50 OR 50W		METALIZE, SEAL	
1pt1	5	3.350" X 13.625"	A709 GR 50 OR 50W	13.625"	METALIZE, SEAL	
1sp1	5	1.875" X 28.000"	A709 GR 50 OR 50W	24.000"	METALIZE, SEAL	
1B	5	FABRIC PAD				
1b1	5	0.125" X 28.000"	VT 731.01	24.000"	HOLES	
1C	10	THREADED ROD				
1c1	10	2.000"ø X 29.000" THREADED ROD	A449		A153–HDG	
1D	20	HEAVY HEX NUT				
1d1	20	2.000"ø HEX NUT	A563–DH OR A194–2H		DYE & LUBE; A153–HDG	
1F	10	BEVELED WASHER PLATE				
1f1	10	0.563" X 4.000"	A36	7.500"	2.375ø CENTERED; A123–HDG	
1G	10	FLAT WASHER				
1g1	10	2.000"ø FLAT WASHER	F436		A153–HDG	

NOTE: ALL MATERIAL SPECIFICATION DESCRIPTIONS ARE ASTM, UNLESS OTHERWISE NOTED.

SECTION 'A–A'

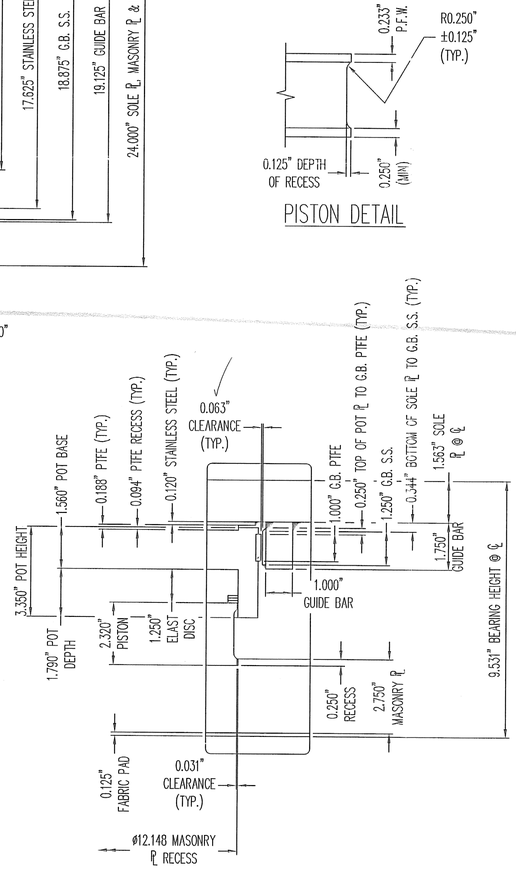

PISTON DETAIL

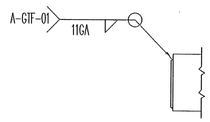

STAINLESS STEEL WELD DETAIL

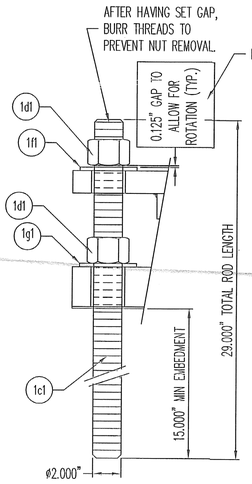

ANCHOR ROD ASSEMBLY

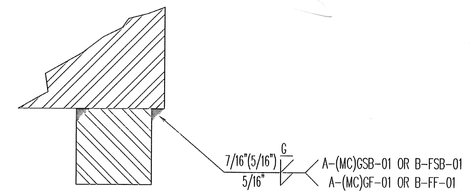

GUIDE BAR WELD DETAIL

THE DS BROWN COMPANY RESERVES THE RIGHT TO FABRICATE THE SOLE PLATE AND GUIDE BARS OUT OF A SINGLE PLATE OF STEEL. IF THE ASSEMBLY IS FABRICATED OUT OF A SINGLE PLATE OF STEEL THE SOLE PLATE OUTER DIMENSIONS WILL BE HELD; THE GUIDE BAR LENGTH MAY BE EXTENDED TO THE LENGTH OF THE SOLE PLATE, BUT THE GUIDE BAR WIDTH AND HEIGHT SHALL BE AS SHOWN.

SEE SHEET GN1 FOR GENERAL NOTES AND COATING LIMITS

RECEIVED
CK'D BY CWC CK'D BY CWC
JUN 0 3 2008
RESUBMIT ____ APPROVED ✓
BY RKW DATE 6-9-08

REV.	DESCRIPTION	DATE	DET.	CKD.

D.S. BROWN
THE D.S. BROWN COMPANY
300 E. CHERRY STREET
NORTH BALTIMORE, OHIO 45872
419.257.3561
FAX: 419.257.0332
WWW.DSBROWN.COM

	ITEM	QUANTITY
LOCATION — TH 24 OVER HOOSIC RIVER	23215–1112	5 OF 5
BRIDGE — 41	–	–
PROJECT — POWNAL, BRZ 1441(19) C/2	–	–
—	–	–
P.O. NO. — 84934	–	–
DESIGNER — VERMONT AGENCY OF TRANSPORTATION	–	–
CUSTOMER — FRANK W. WHITCOMB CONSTRUCTION CORP.	–	–
	–	–

DESCRIPTION: PMG–403 VERSIFLEX HRLM BEARING
BENNINGTON CO., VT

SCALE:	DRAWN BY:	CHECKED BY:	DATE:	
N.T.S.	SP	PMG	5/08	–
PROJECT NUMBER	PRODUCT CODE	RELEASE	SHEET	
23215	1112	1	1	

VERMONT

State of Vermont
PDD/Structures Design Section
One National Life Drive
Montpelier, VT 05633-5001
www.aot.state.vt.us

Agency of Transportation

[phone] 802-828-2621
[fax] 802-828-2566
[tnd] 800-253-0191

June 10, 2008

D.S. Brown Company
300 E. Cherry Street
North Baltimore, Ohio 45872

Project Name: Pownal **Project #:** BRZ 1441(19) C/2

Structure Identification: TH 24 Over the Hoosic River

The following **"Preformed Fabric Bearing Details", Item 531.10, "Bearing Device Assembly, Preformed Bearing Pad",** for the above project (Vendor's Job **#23215-1106**), transmitted by F.W. Whitcomb, Inc. and received by our office on May 30, 2008, have been reviewed and are being returned herewith.

Sheet GN1 is approved "as noted". (Please make appropriate changes as indicated on the "as noted" drawing and submit white prints for our use in the record plans for this project.)

Sheets: 1, 2 & 3 and the bonding and welding procedures are approved.

The following is in response to your questions:

- The PTFE is in addition to the fabric pad thickness.
- The extension of the stainless steel in the longitudinal direction is acceptable.
- We agree that the use of flat washers for slopes less than 5% is acceptable.
- We received the PTFE bonding procedure.
- The coating systems, limits and color for the bearings are correct as detailed.
- D.S. Brown may substitute A709 Gr 50W for A709 Gr 50 at no additional cost to the state or contractor if availability is an issue.

You must provide notice to our fabrication inspector Jeff Clark as to the date fabrication represented by these drawings will begin. Jeff may be contacted by phone at (802)828-0044 or email at jeff.clark@state.vt.us. That notice must be received at least seven days prior to that date, as per Specification 506.03. Any material fabricated prior to the notification date is subject to rejection without further cause.

Sincerely,

Roger R. Whitcomb
Project Manager

Attachments
cc: [X] Resident Engineer Danny Breer -w/prints
[X] F.W. Whitcomb, Inc. – w/prints
[X] Shop Inspector - Jeff Clark w/prints
[X] Materials & Research Section (C&IA Unit) – Letter only
[X] Construction Division - Letter only
[X] Roger R. Whitcomb

VTrans Working to Get You There
Vermont Agency of Transportation

D.S. BROWN
The D.S. Brown Company • 300 East Cherry Street • North Baltimore, Ohio 45872-0158
Phone: (419) 257-3561 • General Fax: (419) 257-2200 • Engineering Fax: (419) 257-0332

The D.S. Brown Company
300 E. Cherry Street
North Baltimore, Ohio 45872
419.257.3561
Fax: 419.257.2200
e-mail: dsb@dsbrown.com
www.dsbrown.com

Equal Opportunity Employer

Recessed Sheet PTFE to Steel Bonding Procedure

The bonding process for laminating PTFE to steel is as follows:

The steel surface to be bonded is prepared for lamination by blasting and degreasing. A two-part structural epoxy is then applied per the manufacturer's instructions. The PTFE used must be etched on one side. The PTFE is cut slightly undersized to fit within the steel recess. The PTFE is then applied to the prepared steel recess, with the etched face of the PTFE facing the steel, and mild pressure is applied to the PTFE for the necessary time period.

Once the epoxy has cured, pressure is removed and any excess epoxy is removed from around the steel recess. Quality control will review the bond to ensure that it is satisfactory.

VTRANS
RECEIVED
OK'D BY _____ OK'D BY JLK
JUN 0 3 2008
RESUBMIT _____ APPROVED ✓
BY RRL DATE 6/6/08

DSBROWN

Production Joint Welding Procedure Specification (D1.5-02)

Procedure No: A-GTF-01 Date Issued: 1-9-04 Revision No: 0 Rev. Date: _____

Contractor (Fabricator) D.S. Brown Company Prepared by: James R. Connor, Quality Assurance Manager

1. Non-Fracture Critical [X] Fracture Critical [ ] WPS Expiration Date: _____
2. Qualified in accordance with: AWS D1.5- 2002 , AWS D1.6-99
   Referenced PQR No(s). PQR-GTAW-01-(03) __ , __ , ____
   Referenced FWST No(s). PQR-GTAW-01(03) , _____ , __ , ____
3. Material specification(s) ASTM A709 Gr. 36, 50, 50W, 304SS, 316SS
4. Material Thickness (es) Unlimited
5. Welding process GTAW
6. Manual [X] , machine [ ] , or semiautomatic [ ]
7. Position(s) of welding 1F, 2F
8. Filler metal specification AWS A5.9
9. Filler metal class and brand name ER309L (Murrex)
10. Flux class & brand N/A , Type N/A
11. Shielding gas 100% Argon Flow rate 20 CFH
12. Single pass [X] Or multiple pass [ ]
13. Single arc [X] Or multiple arc [ ]
14. Welding Current DCEN
15. Polarity Straight
16. Welding progression stringers
17. Root treatment Clean to bright sound metal or per AWS D1.5 (3.2.1 & 3.11)
18. Postheat treatment N/A
19. Calculated Heat Input (KJ/In) Min 10.9 KJ Max 20.4 KJ
20. Electrode extension (electrical stickout) N/A

For DOT Approval

VTRANS RECEIVED
MAY 30 2008
COPY _____ OK'D BY _____
RESUBMIT _____ APPROVED
DATE 6/6/08

Weld size (In)	Pass No(s)	Electrode Size (In)	Welding Process Variables AMPS/WFS*	VOLTS	Travel Speed (IPM)
20 ga.	1	1/8"	170-200	15-17	10-14
16 ga.	1	1/8"	170-200	15-17	10-14
14 ga.	1	1/8"	170-200	15-17	10-14
12 ga.	1	1/8"	170-200	15-17	10-14
11 ga.	1	1/8"	170-200	15-17	10-14
10 ga.	1	1/8"	170-200	15-17	10-14
8 ga.	1	1/8"	170-200	15-17	10-14
3/16"	1	1/8"	170-200	15-17	10-14

Joint Detail (Flare Bevel)
Show all dimensions, weld sizes, passes, and AWS symbols

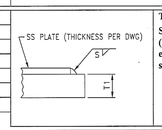

T_1 = Varies
S = Fillet Weld Size (Fillet weld must not exceed thickness of stainless steel)

* Wire feed speed may be used along with amperage (include chart)

Prepared By: James R. Connor DSB QA Manager

Project: _____

DSB Job: 23215-1106-VT

Preheat and Interpass Temperature Chart

Base Metal Thickness range	Minimum Preheat (°F)	Max Preheat & Interpass (°F)
≤3/4"	50°F	450°F
>3/4" to ≤1.5"	70°F	450°F
>1.5" to ≤2.5"	150°F	450°F
>2.5"	225°F	450°F

Note: When this procedure is used for A709Gr50W materials, it shall be limited to 5/16" single pass or material be coated.

GENERAL NOTES

1. MATERIAL AND WORKMANSHIP SHALL BE IN ACCORDANCE WITH THE VERMONT AGENCY OF TRANSPORTATION "STANDARD SPECIFICATIONS FOR CONSTRUCTION, 2006 EDITION" SECTIONS 531 AND 731, SPECIAL PROVISIONS, SUPPLEMENTAL SPECIFICATIONS AND THE CONTRACT PLANS. GENERAL SHOP PRACTICES, STRUCTURAL FABRICATION, WELDING AND ASSEMBLY SHALL BE GOVERNED BY ANSI/AASHTO/AWS D1.5 BRIDGE WELDING CODE.

2. THESE SHOP DRAWINGS WERE PREPARED IN ACCORDANCE WITH THE CONTRACT PLANS AND SPECIFICATIONS. THE D.S. BROWN COMPANY DOES NOT ACCEPT LIABILITY FOR THE DESIGN OF THE PRODUCTS DETAILED IN THESE SHOP DRAWINGS.

3. THE D.S. BROWN COMPANY TO SUPPLY ONLY THE PARTS SHOWN ON THIS DRAWING.

4. ALL STEEL SHALL BE PRODUCED IN THE UNITED STATES OF AMERICA.

5. PTFE (TEFLON) SHALL BE VIRGIN, UNFILLED POLYTETRAFLUOROETHYLENE SATISFYING THE REQUIREMENTS OF ASTM D4894.

6. PTFE IS TO BE PURCHASED ETCHED ON ONE SIDE FOR BONDING. THE BONDING PROCESS FOR LAMINATING PTFE TO THE FABRIC PAD IS AS FOLLOWS: THE FABRIC PAD SURFACE TO BE BONDED IS PREPARED FOR LAMINATION. A TWO-PART STRUCTURAL GRADE EPOXY IS THEN APPLIED PER THE MANUFACTURE'S INSTRUCTIONS. THE PTFE IS CUT SLIGHTLY OVERSIZE TO ACCOUNT FOR POSSIBLE DRIFT. THE PTFE IS THEN APPLIED TO THE FABRIC PAD AND PUT INTO A VACUUM PRESS AT THE APPROPRIATE PRESSURE FOR THE NECESSARY TIME PERIOD. ONCE THE FABRIC PAD AND PTFE IS REMOVED FROM THE PRESS, THE PTFE IS TRIMMED TO PLAN SIZE AND THE PADS ARE SUBMITTED FOR QUALITY CONTROL REVIEW.

7. STAINLESS STEEL SHALL CONFORM TO ASTM A240 – TYPE 304 AND SHALL BE 10GA. (0.135"). STAINLESS STEEL SLIDING SURFACES IN CONTACT WITH PTFE SHALL HAVE A NO. 8 MIRROR FINISH AND ALL OTHERS SHALL HAVE A 2B FINFISH.

8. UNLESS SPECIFIED OTHERWISE, THE DIMENSION TOLERANCES AND SURFACES FINISHES OF THE BEARING SHALL SATISFY THE REQUIREMENTS OF AASHTO STANDARD SPECIFICATIONS, DIVISION II, TABLES 18.5.1.5-1.

9. DS BROWN MAY SUBSTITUTE A709 GR. 50W FOR A709 GR. 50 DUE TO AVAILABILITY AT NO ADDITIONAL COST TO THE OWNER OR CONTRACTOR.

10. ALL CORNERS AND EDGES OF STEEL PLATES SHALL BE GROUND TO A 0.063" RADIUS FOR GALVANIZING.

11. THE TEMPERATURE OF THE STEEL ADJACENT TO THE FABRIC PAD SHALL NOT EXCEED 300°F (149°C)AND 250°F (121°C) FOR SURFACES IN CONTACT WITH THE PTFE, WHERE APPLICABLE. TEMPERATURE SHALL BE CONTROLLED BY THE USE OF TEMPERATURE INDICATING CRAYON OR OTHER DEVICES APPROVED BY THE ENGINEERS.

TOLERANCE TABLE	
DESCRIPTION	TOLERANCE
SOLE PL. PLAN DIMENSIONS	+0.063", -0.063"
SOLE PL. THICKNESS	+0.063", -0.063"
HOLE LOCATION	+0.063", -0.063"

TOLERANCE NOTES

BEARING SURFACES SHALL BE FLAT WITH A MAXIMUM PERMISSIBLE VARIATION OF 0.01" FROM A PLANE DETERMINED BY ANY THREE CORNERS OF THE PLATE.

FOR STAINLESS STEEL MATING TO PTFE BONDED TO FABRIC BEARING PAD MATERIAL THE TOLERANCE SHALL BE 0.01" FROM A PLANE DETERMINED BY ANY THREE CORNERS OF THE PLATE.

COATING NOTES FOR ABUT. 1 BEARINGS

1. ALL STRUCTURAL STEEL SURFACES TO BE GALVANIZED SHALL BE CLEANED IN ACCORDANCE WITH SSPC-SP10.

2. ALL EXTERNAL STEEL SHALL BE GALVANIZED IN ACCORDANCE WITH ASTM A123. GALVANIZATION LIFTING DEVICES MAY BE WELDED TO PARTS IF NECESSARY. WHEN THEIR USE IS COMPLETE, REMOVE AND GRIND FLUSH ALL CONNECTION LOCATIONS. REPAIR ALL GALVANIZATION IN ACCORDANCE WITH ASTM A780. GALVANIZING REPAIR PAINTS CONTAINING ALUMINUM SHALL NOT BE USED ON SURFACES TO BE IN CONTACT WITH FRESH CONCRETE.

3. ALL SURFACES DAMAGED BY FIELD WELDING OR HANDLING SHALL BE REPAIRED IN CONFORMANCE WITH SUBSECTION 513.06 (f).

4. SEE GALVANIZING LIMIT DETAILS.

COATING NOTES FOR ABUT. 2 BEARINGS

1. ALL STRUCTURAL STEEL SURFACES TO BE GALVANIZED SHALL BE CLEANED IN ACCORDANCE WITH SSPC-SP10.

2. ALL EXTERNAL STEEL SHALL BE GALVANIZED IN ACCORDANCE WITH ASTM A123. GALVANIZATION LIFTING DEVICES MAY BE WELDED TO PARTS IF NECESSARY. WHEN THEIR USE IS COMPLETE, REMOVE AND GRIND FLUSH ALL CONNECTION LOCATIONS. REPAIR ALL GALVANIZATION IN ACCORDANCE WITH ASTM A780.

3. ALL GALVANIZED A709 GR50 OR GR 50W EXTERNAL STEEL SURFACES SHALL BE CLEANED IN ACCORDANCE WITH SSPC-SP1 AND SSPC-SP7, AND PAINTED WITH:
   PRIMER: GALOSEAL WB @ 0.5-1 mils d.f.t.
   FINAL: CARBOTHANE 133HB (ALIPHATIC POLYURETHANE) @ 3-5 mils d.f.t.
   TOTAL d.f.t.=3.5-6 mils
   FEDERAL COLOR NUMBER: 20059 (BROWN)
4. SEE COATING LIMIT DETAILS FOR GALVANIZATION & PAINT LOCATIONS.

MUST BE PAINTED WITHIN 12 HOURS OF GALVANIZING See Sub section 513.06(f)

RECEIVED
CK'D BY CWC CK'D BY CWC
MAY 30 2008
RESUBMIT APPROVED AS NOTED
BY RHe DATE 6-9-08

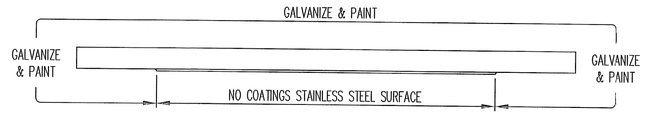

COATING LIMITS
ABUTMENT 2

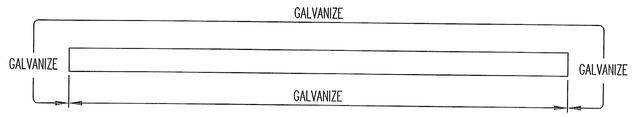

COATING LIMITS
ABUTMENT 1

REV.	DESCRIPTION	DATE	DET.	CKD.

D.S. BROWN
THE D.S. BROWN COMPANY
300 E. CHERRY STREET
NORTH BALTIMORE, OHIO 45872
419.257.3561
FAX: 419.257.0332
WWW.DSBROWN.COM

	ITEM	QUANTITY
LOCATION — TH 24 OVER HOOSIC RIVER	–	–
BRIDGE — 41	–	–
PROJECT — BRZ 1441(19) C/2	–	–
—	–	–
P.O. NO. — 84934	–	–
DESIGNER — VTDOT	–	–
CUSTOMER — FRANK W WHITCOMB CONSTRUCTION	–	–
	–	–

DESCRIPTION: GENERAL NOTES AND COATING LIMITS BENNINGTON CO., VT

SCALE:	DRAWN BY:	CHECKED BY:	DATE:	
N.T.S.	SP	NRH	5/08	–
PROJECT NUMBER	PRODUCT CODE	RELEASE	SHEET	
23215	1106	1	GN1	

MK	QTY.	DESCRIPTION	MATERIAL	LENGTH	REMARKS	PART NO.
1A	5	FABRIC BEARING				
1a1	5	1.500" X 18.000"	VT 731.01	7.000"		
1a2	5	0.063" X 18.000"	PTFE	7.000"	PURE VIRGIN UNFILLED	
1a3	5	10 GA. X 19.000"	A240 T304, #8 & 2B	12.760"	PLAIN	
1sp1	5	1.375" X 28.000"	A709 GR 50 OR 50W	13.000"	A123-HDG, PAINT	

NOTE: ALL MATERIAL SPECIFICATION DESCRIPTIONS ARE ASTM, UNLESS OTHERWISE NOTED.

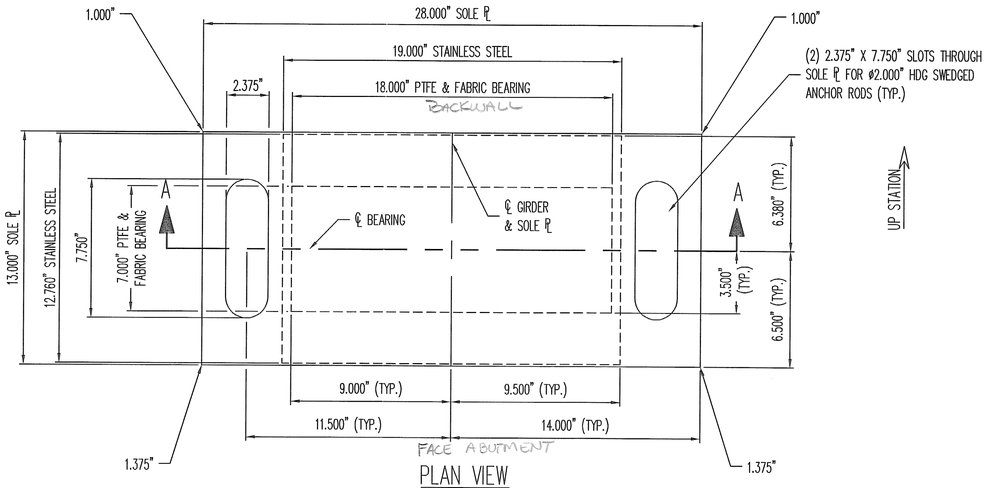

PLAN VIEW

EXP. BEARING

(5) REQ'D ABUT. 2

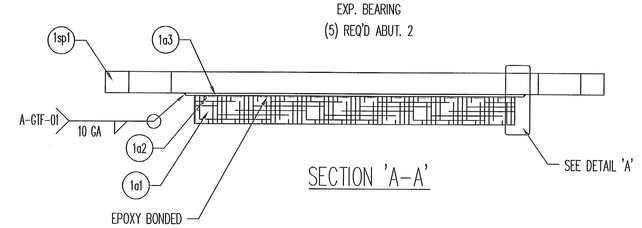

SECTION 'A-A'

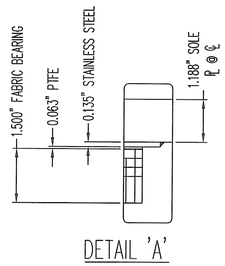

DETAIL 'A'

LOAD DATA	23215-1106-1
MAX VERTICAL DL	125.0 k
MAX HORIZONTAL DL	12.5 k

SEE SHEET GN1 FOR GENERAL NOTES AND COATING LIMITS
SEE SHEET 3 FOR ANCHOR ROD ASSEMBLY

RECEIVED
CK'D BY WPL CK'D BY CWC
MAY 30 2008
RESUBMIT APPROVED ✓
BY RRW DATE 6-9-08

REV.	DESCRIPTION	DATE	DET.	CKD.

D.S. BROWN
THE D.S. BROWN COMPANY
300 E. CHERRY STREET
NORTH BALTIMORE, OHIO 45872
419.257.3561
FAX: 419.257.0332
WWW.DSBROWN.COM

LOCATION — TH 24 OVER HOOSIC RIVER
BRIDGE — 41
PROJECT — BRZ 1441(19) C/2
—
P.O. NO. — 84934
DESIGNER — VTDOT
CUSTOMER — FRANK W WHITCOMB CONSTRUCTION

ITEM	QUANTITY
23125-1106-2	5 OF 5
–	–
–	–
–	–
–	–
–	–
–	–
–	–
–	–

DESCRIPTION: VERSIFLEX PREFORMED FABRIC BEARING BENNINGTON CO., VT

SCALE:	DRAWN BY:	CHECKED BY:	DATE:	
N.T.S.	SP	NRH	5/08	–
PROJECT NUMBER	PRODUCT CODE	RELEASE	SHEET	
23215	1106	1	1	

MK	QTY.	DESCRIPTION	MATERIAL	LENGTH	REMARKS	PART NO.
2A	5	FABRIC BEARING				
2a1	5	2.000" X 18.000"	VT 731.01	10.000"		
2sp1	5	1.625" X 28.000"	A709 GR 50 OR 50W	13.000"	A123-HDG	

NOTE: ALL MATERIAL SPECIFICATION DESCRIPTIONS ARE ASTM, UNLESS OTHERWISE NOTED.

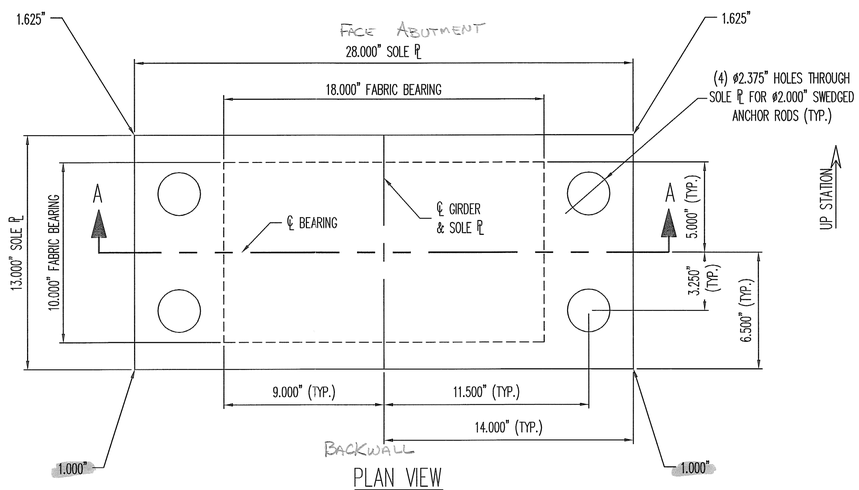

PLAN VIEW

FIXED BEARING

(5) REQ'D ABUT. 1

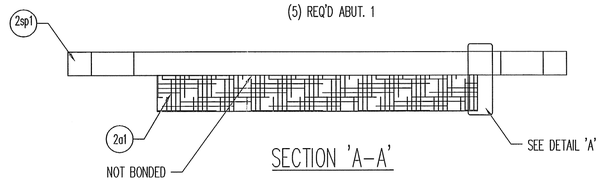

SECTION 'A-A'

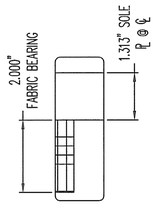

DETAIL 'A'

LOAD DATA	23215-1106-2
MAX VERTICAL DL	176.0 k
MAX HORIZONTAL DL	17.6 k

SEE SHEET GN1 FOR GENERAL NOTES AND COATING LIMITS
SEE SHEET 3 FOR ANCHOR ROD ASSEMBLY

RECEIVED
CK'D BY WBL OK'D BY CWC
MAY 30 2008
RESUBMIT ____ APPROVED ✓
BY TRW DATE 6-9-08

REV.	DESCRIPTION	DATE	DET.	CKD.

D.S. BROWN

THE D.S. BROWN COMPANY
300 E. CHERRY STREET
NORTH BALTIMORE, OHIO 45872
419.257.3561
FAX: 419.257.0332
WWW.DSBROWN.COM

	ITEM	QUANTITY
LOCATION — TH 24 OVER HOOSIC RIVER	23125-1106-1	5 OF 5
BRIDGE — 41	–	–
PROJECT — BRZ 1441(19) C/2	–	–
—	–	–
P.O. NO. — 84934	–	–
DESIGNER — VTDOT	–	–
CUSTOMER — FRANK W WHITCOMB CONSTRUCTION	–	–
	–	–

DESCRIPTION: VERSIFLEX PREFORMED FABRIC BEARING
BENNINGTON CO., VT

SCALE:	DRAWN BY:	CHECKED BY:	DATE:	
N.T.S.	SP	NRH	5/08	–
PROJECT NUMBER		PRODUCT CODE	RELEASE	SHEET
23215		1106	1	2

MK	QTY.	DESCRIPTION	MATERIAL	LENGTH	REMARKS	PART NO.
3A	30	SWEDGE ROD				
3a1	30	2.000"ø X 21.000" SWEDGED ROD	A449–T1		4" THREADS, 14" SWEDGE; A153–HDG	
3B	30	HEAVY HEX NUT				
3b1	30	2.000"ø HEX NUT	A563–DH OR A194–2H		A153–HDG	
3C	20	WASHER PLATE				
3c1	20	0.375" X 4.000"ø	A36		2.063"ø HOLE @ CENTER; A123–HDG	
3D	10	WASHER PLATE				
3d1	10	0.375" X 4.000"	A36	9.750"	2.063"ø HOLE @ CENTER; A123–HDG	

NOTE: ALL MATERIAL SPECIFICATION DESCRIPTIONS ARE ASTM, UNLESS OTHERWISE NOTED.

ANCHOR ROD SCHEDULE

ASSM MK	LOCATION	QTY	FLAT WASHER	WASHER PLATE
3C	ABUT. 1	20	–	0.375" X ø4.000"
3D	ABUT. 2	10	–	0.375" X 4.000" X 9.750"

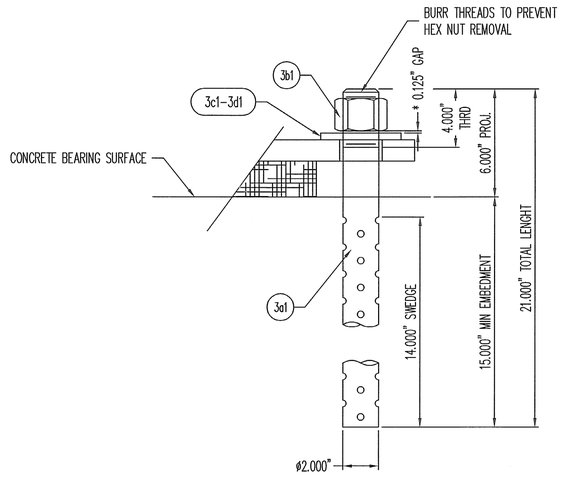

ANCHOR ROD ASSEMBLY

* NOTE: GAP NUT @ ABUTMENT 2
TIGHTEN NUT @ ABUTMENT 1 AS
DIRECTED BY THE BRIDGE ENGINEER

NOTE: ARTICLE 10.24.3.1 OF THE AASHTO STANDARD DESIGN SPECIFICATIONS REQUIRES BEVELED WASHERS FOR SLOPES GREATER THAT 1:20. THE DS BROWN CO WILL PROVIDE FLAT WASHERS, OF THE REQUIRED MATERIAL AND THICKNESS, FOR SLOPES THAT ARE LESS THAN 1:20.

SEE SHEET GN1 FOR GENERAL NOTES

RECEIVED
CK'D BY NRH CK'D BY CWC
MAY 30 2008
RESUBMIT ____ APPROVED ✓
BY RHW DATE 6-9-08

REV.	DESCRIPTION	DATE	DET.	CKD.

D.S. BROWN
THE D.S. BROWN COMPANY
300 E. CHERRY STREET
NORTH BALTIMORE, OHIO 45872
419.257.3561
FAX: 419.257.0332
WWW.DSBROWN.COM

LOCATION — TH 24 OVER HOOSIC RIVER
BRIDGE — 41
PROJECT — BRZ 1441(19) C/2
—
P.O. NO. — 84934
DESIGNER — VTDOT
CUSTOMER — FRANK W WHITCOMB CONSTRUCTION

ITEM	QUANTITY
–	–
–	–
–	–
–	–
–	–
–	–
–	–
–	–
–	–
–	–

DESCRIPTION:
ANCHOR ROD ASSEMBLY
BENNINGTON CO., VT

SCALE:	DRAWN BY:	CHECKED BY:	DATE:	
N.T.S.	SP	NRH	5/08	–
PROJECT NUMBER		PRODUCT CODE	RELEASE	SHEET
23215		1106	1	3

GENERAL NOTES

CONSTRUCTION SPECIFICATIONS

1). ALL MATERIAL AND WORKMANSHIP TO BE IN ACCORDANCE WITH THE STATE OF VERMONT AGENCY OF TRANSPORTATION STANDARD SPECIFICATIONS FOR CONSTRUCTION DATED 2006 WITH LATEST REVISIONS AND THE AASHTO STANDARD SPECIFICATIONS FOR HIGHWAY BRIDGES DATED 2002 AND ITS LATEST REVISIONS.

MATERIAL SPECIFICATIONS

1). UNLESS OTHERWISE NOTED, ALL STEEL TO BE AASHTO M270 (ASTM A709) GRADE 50W.

2). MATERIAL NOTED "CVN", "H2-3" OR "H2-4" ON DETAIL DRAWINGS SHALL BE CHARPY V-NOTCH TESTED IN ACCORDANCE WITH THE REQUIREMENTS OF VERMONT STANDARD SPECIFICATIONS SECTION 714.01.

3). BOLTS FOR NON-PAINTED AREAS:
HIGH STRENGTH BOLTS: ASTM A325, TYPE 3.
NUTS SHALL BE A563 GRADE C3 OR DH3.
WASHERS SHALL BE ASTM F436 (TYPE 3).

BOLTS FOR PAINTED AREAS:
HIGH STRENGTH BOLTS: ASTM A325, TYPE 1 GALV.
NUTS SHALL BE A563 GRADE DH.
WASHERS SHALL BE ASTM F436 (GALV.)

BOLTS, NUTS AND WASHERS THAT ARE GALVANIZED SHALL BE GALVANIZED BY EITHER HOT-DIP GALVANIZING IN ACCORDANCE WITH ASTM A153 OR MECHANICALLY GALVANIZED IN ACCORDANCE WITH ASTM B695, CLASS 50, TYPE I. GALVANIZED NUTS SHALL BE OVERTAPPED TO THE MINIMUM REQUIRED FOR FASTENER ASSEMBLY AND SHALL MEET THE REQUIREMENTS OF ASTM A153, SUPPLEMENT S1.

BOLTS & NUTS SHALL BE ROTATIONAL CAPACITY TESTED. DO NOT MIX NUTS & BOLTS FROM DIFFERENT CONTAINERS UNLESS ALL BOLTS & NUTS HAVE THE SAME LOT NUMBER.

FABRICATION

1). ALL HOLES SHALL BE PUNCHED OR DRILLED FULL SIZE (UN).

WELDING

1). THE CONFIGURATION OF THE WELD JOINTS AND ALL WELDING PROCEEDURES SHALL BE IN ACCORDANCE WITH AASHTO/AWS D1.5-02 08 BRIDGE WELDING CODE AND IN ADDITION TO SPECIFICATIONS SHOWN ABOVE. ALL WELDING WILL BE DETAILED TO PRE-QUALIFIED JOINTS, UNLESS PROHIBITED BY THE DESIGNER.

2). WELDING OF MAIN LOAD CARRYING MEMBERS AND ATTACHMENTS SHALL BE PERFORMED USING THE AUTOMATIC SUBMERGED ARC & SHIELDED METAL ARC PROCESSES. ALL WELDS ARE CONTINUOUS U.N.

3). NON DESTRUCTIVE TESTING OF WELDS SHALL BE IN ACCORDANCE WITH THE REFERENCED SPECIFICATION.

4). SEE DETAIL "WS1" ON THIS DRAWING FOR WELD TERMINATION DETAIL.

FIELD CONNECTIONS

1). ALL FIELD CONNECTIONS SHALL BE MADE WITH 7/8" DIAMETER HIGH STRENGTH A-325 BOLTS (UN), INSTALLED PER SECTION 506.19(c). SEE DWG E2 FOR FIELD BOLT SIZES.

2). BOLTS SHALL HAVE HEAVY HEX NUT, HEAVY HEX HEAD, AND AT LEAST ONE FLAT WASHER EACH. WASHER TO BE PLACED UNDER TURNED ELEMENT.

3). PIECE MARKS WILL BE LOCATED AS SHOWN ON ERECTION DRAWINGS.

CLEANING & PAINTING

1. ALL STRUCTURAL STEEL SHALL BE BLAST CLEANED IN ACCORDANCE WITH SSPC-SP6 PRIOR TO FABRICATION.

2. THE ABUTMENT ENDS OF THE GIRDERS SHALL BE GREASED AS PER SUBSECTION 516.03(d).

2. STEEL SHALL NOT BE PAINTED, EXECPT AS NOTED IN SKETCH "P".

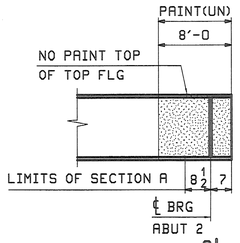

SKETCH "P"

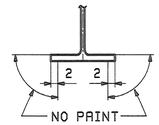

SECTION "A"

GIRDERS AND DIAPHRAGMS SHALL BE PAINTED AS NOTED ABOVE IN ACCORDANCE TO THE PAINT SYSTEM LISTED BELOW.
THE FINISH COAT COLOR SHALL MATCH COLOR CHIP NO. ~~30045~~ 30059 OF FEDERAL STANDARD 595B.

ENGINEER PLEASE VERIFY FINISH COAT COLOR

PAINT SYSTEM:

	MANUFACTURER: INTERNATIONAL PAINT, INC.	DFT (MILS) MIN.	MAX.
P	INTERZINC 22HS INORGANIC ZINC SILICATE PRIMER	2.5	5.0
I	INTERGARD 475HS EPOXY	4.0	8.0
T	INTERHANE 870 POLYURETHANE	3.0	5.0

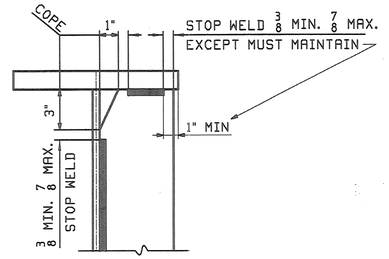

DETAIL "WS1"

Structures

RECEIVED
CK'D BY WDH CK'D BY CWC
MAY 15 2008
RESUBMIT APPROVED AS NOTED
BY DATE

REV.	DATE	REMARKS	DWN	CHK	APVL	SHOP
0		~			5-12-08	

MATERIAL:	SURFACE PREP. & PAINT:	HOLES:	SHOP BOLTS:
		AS NOTED	AS NOTED

DESCRIPTION: GENERAL NOTES

CASCO BAY STEEL STRUCTURES, INC.
75 SPRING HILL ROAD SACO, MAINE 04072
PHONE (207) 282-7360 FAX. (207) 282-1179
TENSOR 2776

STRUCTURE: TH24 over Hoosic River BRIDGE NO. 41 POWNAL, VERMONT COUNTY OF BENNINGTON	DRAWN: JTB	DATE: 04/16	
	CHKD: TM	DATE: 05/05	
LOCATION: TOWN OF POWNAL	JOB NO.	DWG NO.	
PROJ NO. BRZ 1441 (19) C/2	367	GN1	
CUSTOMER: VERMONT AGENCY OF TRANSPORTATION		REV. △	

JTB Tue May 6 13:57:44 EDT 2008 /users/jobs/2776/GN1.dwg

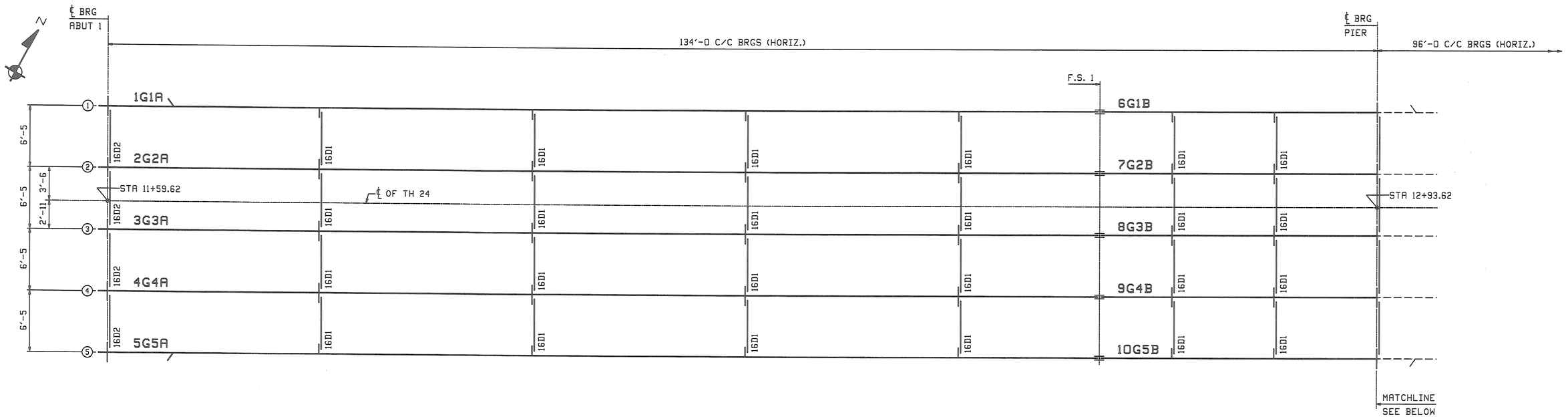

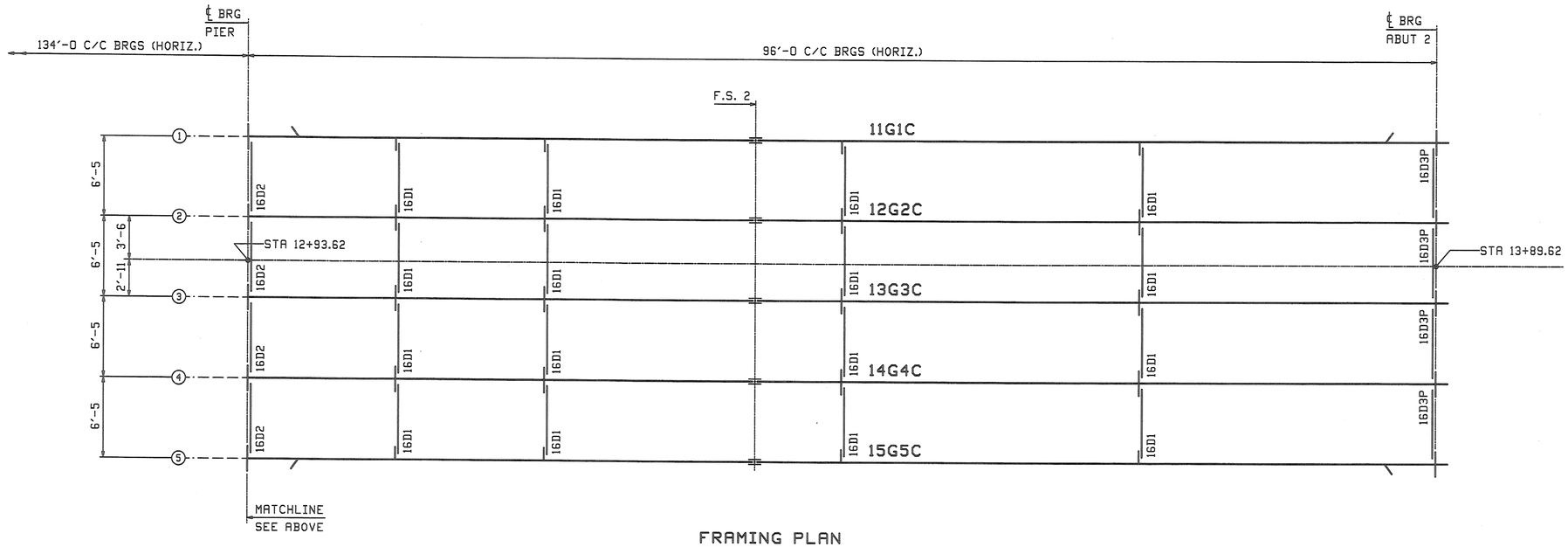

FRAMING PLAN

WORK THIS DRAWING WITH DRAWING E2

RECEIVED
CK'D BY WDL CK'D BY CWC
MAY 15 2008
RESUBMIT ____ APPROVED ✓
BY DATE

REV.	DATE	REMARKS	DWN	CHK	APVL	SHOP
0					5-12-08	

MATERIAL: | SURFACE PREP. & PAINT: | HOLES: | SHOP BOLTS:

DESCRIPTION: FRAMING PLAN

CASCO BAY STEEL STRUCTURES, INC.
75 SPRING HILL ROAD SACO, MAINE 04072
PHONE (207) 282-7360 FAX. (207) 282-1179
TENSOR 2776

STRUCTURE: TH24 over Hoosic River BRIDGE NO. 41 POWNAL, VERMONT COUNTY OF BENNINGTON	DRAWN: JTB	DATE: 04/25
	CHK'D: TM	DATE: 05/05
LOCATION: TOWN OF POWNAL	JOB NO.	DWG NO.
PROJ NO. BRZ 1441 (19) C/2	367	E1
CUSTOMER: VERMONT AGENCY OF TRANSPORTATION		REV. △

JTB Tue May 6 10:27:45 EDT 2008 /users/jobs/2776/E1.dwg

FIELD BOLT LIST — A325 Type 3 BOLTS

LINE	NO REQ'D.	BOLT DIAM.	BOLT LEN.	BOLTS/CONN.	# OF CONN.	GRIP	THICKNESS OF PCS. CONNECTED						WASH CODE	PIECES CONNECTED AND REMARKS
1														**FIELD SPLICE 1**
2	400	7/8	4 3/4	80	5	3 1/4	5/8	2	5/8				1	TOP FLANGE SPLICE
3	420	7/8	3 1/4	84	5	1 7/8	5/8	5/8	5/8				1	WEB SPLICE
4	400	7/8	5	80	5	3 1/2	5/8	2 1/4	5/8				1	BOTTOM FLANGE SPLICE
5														
6														**FIELD SPLICE 2**
7	280	7/8	4 3/4	56	5	3 1/4	5/8	2	5/8				1	TOP FLANGE SPLICE
8	360	7/8	3 1/4	72	5	1 7/8	5/8	5/8	5/8				1	WEB SPLICE
9	280	7/8	4 3/4	56	5	3 1/4	5/8	2	5/8				1	BOTTOM FLANGE SPLICE
10														
11														**ABUT 1 & PIER DIAPHRAGMS**
12	128	7/8	2 3/4	8	16	1 5/16	7/16	7/8					1	DIAPHRAGM WEB TO BRG STIFFENER
13														
14														**INT. DIAPHRAGMS**
15	640	7/8	2 1/2	8	80	1 1/16	7/16	5/8					1	DIAPHRAGM WEB TO CONNECTION PLATE

WASHER CODES

1: 1 Hard Flat Washer

FIELD BOLT LIST — A325 Type 1 BOLTS (GALV)

LINE	NO REQ'D.	BOLT DIAM.	BOLT LEN.	BOLTS/CONN.	# OF CONN.	GRIP	THICKNESS OF PCS. CONNECTED						WASH CODE	PIECES CONNECTED AND REMARKS
16														**ABUT 2 DIAPHRAGMS**
17	64	7/8	2 3/4	8	8	1 5/16	7/16	7/8					1	DIAPHRAGM WEB TO BRG STIFFENER

WASHER CODES

1: 1 Hard Flat Washer

FIELD BOLT SUMMARY — 2% + 2 ADDED, MIN. 2 EXTRA

LINE	NO. OF BOLTS	BOLT DIAM.	TYPE	BOLT LEN	ACTUAL COUNT	REMARKS
1	655	7/8	A325 Type 3	2 1/2	640	
2	133	7/8		2 3/4	128	
3	798	7/8		3 1/4	780	
4	981	7/8		4 3/4	960	
5	410	7/8	A325 Type 3	5	400	
6						
7	2977	Hard Flat Washers for 7/8 ø BOLT				F436-3
8						
9						
10	67	7/8	A325 Type 1	2 3/4	64	GALVANIZED
11						
12	67	Hard Flat Washers for 7/8 ø BOLT				GALVANIZED (F436)
13						

RECEIVED
CK'D BY WDL OK'D BY CWC
MAY 15 2008
RESUBMIT ____ APPROVED ✓
BY ____ DATE ____

WORK THIS DRAWING WITH DRAWING E1

REV.	DATE	REMARKS	DWN	CHK	APVL	SHOP
0		~			5-12-08	

MATERIAL:	SURFACE PREP. & PAINT:	HOLES:	SHOP BOLTS:

DESCRIPTION: FIELD BOLTS

CASCO BAY STEEL STRUCTURES, INC.
75 SPRING HILL ROAD SACO, MAINE 04072
PHONE (207) 282-7360 FAX. (207) 282-1179
TENSOR 2776

STRUCTURE: TH24 over Hoosic River BRIDGE NO. 41 POWNAL, VERMONT COUNTY OF BENNINGTON		DRAWN: JTB	DATE: 04/25
		CHKD: TM	DATE: 05/05
LOCATION: TOWN OF POWNAL		JOB NO.	DWG NO.
PROJ NO. BRZ 1441 (19) C/2		367	E2
CUSTOMER: VERMONT AGENCY OF TRANSPORTATION			REV. △

JTB Tue May 6 13:37:52 EDT 2008 /users/jobs/2776/E2 : RevO

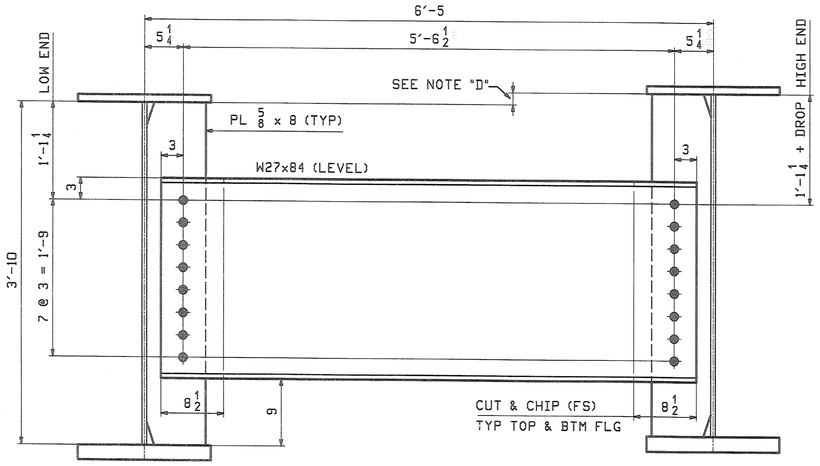

TYP. INT. DIAPHRAGMS

(LOOKING BACK-STATION)
40 REQ'D

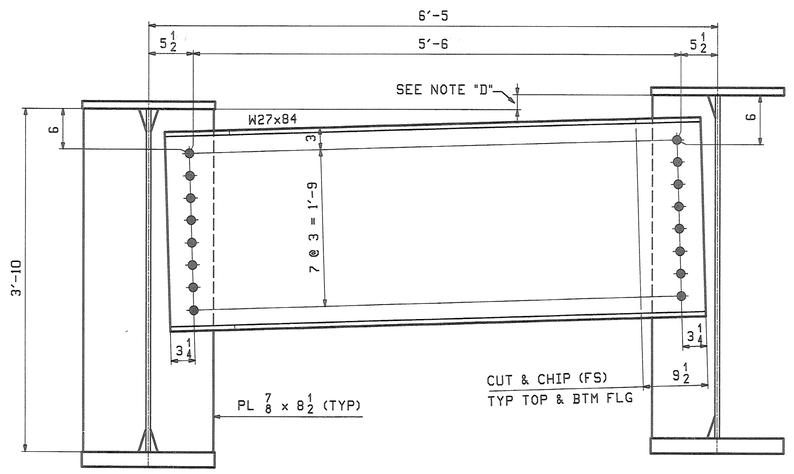

TYP. BRG. DIAPHRAGMS

(LOOKING BACK-STATION - ABUT 1 & PIER)
(LOOKING AHEAD-STATION - ABUT 2)
12 REQ'D

NOTE "D"
DROP VARIES IN MAGNITUDE & DIRECTION

RECEIVED
CK'D BY WDL OK'D BY AWC
MAY 15 2008
RESUBMIT APPROVED
BY DATE

NOTES:
1. MATERIAL SHALL BE ASTM A709 GRADE 50W.
2. ALL BOLT HOLES SHALL BE 15/16"Ø FOR 7/8"Ø HSB (UN).

REV.	DATE	REMARKS	DWN	CHK	APVL	SHOP
0		~			5-12-08	

MATERIAL:	SURFACE PREP. & PAINT:	HOLES:	SHOP BOLTS:
A709-50W	AS NOTED ON GNI	15/16"Ø	NONE

DESCRIPTION: TYPICAL LAYOUTS

CASCO BAY STEEL STRUCTURES, INC.
75 SPRING HILL ROAD SACO, MAINE 04072
PHONE (207) 282-7360 FAX. (207) 282-1179
TENSOR 2776

STRUCTURE:	TH24 over Hoosic River BRIDGE NO. 41 POWNAL, VERMONT COUNTY OF BENNINGTON	DRAWN: JTB	DATE: 04/16
		CHK'D: TM	DATE: 05/05
LOCATION:	TOWN OF POWNAL	JOB NO.	DWG NO.
PROJ NO.	BRZ 1441 (19) C/2	367	TD1
CUSTOMER:	VERMONT AGENCY OF TRANSPORTATION		REV. △

JTB Tue May 6 19:37:43 EDT 2008 /users/jobs/3715/TB1.dwg

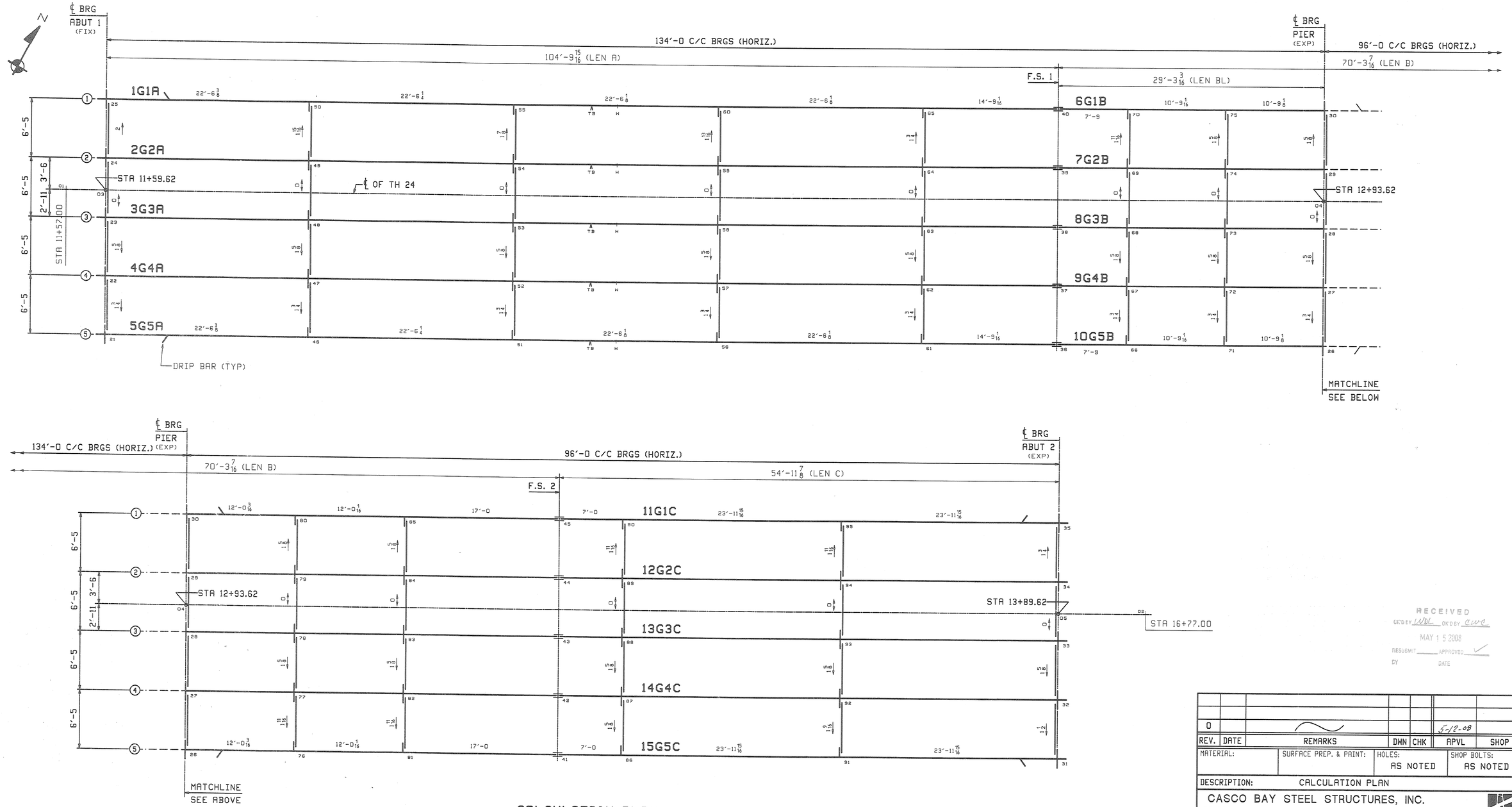

CALCULATION PLAN

Line	GRADES ABUT 1	PIER	ABUT 2
1	.0450	.0251	-.0178
2	.0447	.0250	-.0177
3	.0447	.0250	-.0177
4	.0447	.0250	-.0177
5	.0447	.0251	-.0175

NOTES:
1. LONGITUDINAL DIMENSIONS ARE SLOPING ALONG BOTTOM OF WEBS WITH CORRECTIONS MADE FOR DL CAMBER, V.C. & GRADE (UN).
2. TRANSVERSE DIMENSIONS ARE IN A HORIZONTAL PLANE (UN).
3. ARROW POINTS TOWARD LOW END OF MEMBER.
4. ENDS OF GIRDERS & BRG STIFFENERS ARE VERTICAL AFTER DL ROTATION.
5. CROSSFRAME STIFFENERS & FIELD SPLICES ARE NORMAL TO GRADE.
6. BOTTOM POINT NUMBERS = TOP POINT NUMBERS + 100
7. FOR LAYOUTS SEE "TD" SHEETS.

RECEIVED
CK'D BY WBL OK'D BY CWS
MAY 1 5 2008
RESUBMIT ____ APPROVED ✓
BY ____ DATE

REV.	DATE	REMARKS	DWN	CHK	APVL	SHOP
0					5-12-08	

MATERIAL:	SURFACE PREP. & PRINT:	HOLES:	SHOP BOLTS:
		AS NOTED	AS NOTED

DESCRIPTION: CALCULATION PLAN

CASCO BAY STEEL STRUCTURES, INC.
75 SPRING HILL ROAD SACO, MAINE 04072
PHONE (207) 282-7360 FAX. (207) 282-1179
TENSOR 2776

STRUCTURE:	TH24 over Hoosic River BRIDGE NO. 41 POWNAL, VERMONT COUNTY OF BENNINGTON	DRAWN: JTB	DATE: 04/16
		CHK'D: TM	DATE: 05/05
LOCATION:	TOWN OF POWNAL	JOB NO.	DWG NO.
PROJ NO.	BRZ 1441 (19) C/2	367	WS1
CUSTOMER:	VERMONT AGENCY OF TRANSPORTATION		REV. △

JTB Tue May 6 13:37:41 EDT 2008 /user1/jobs/2776/GS1.1 Rev.C

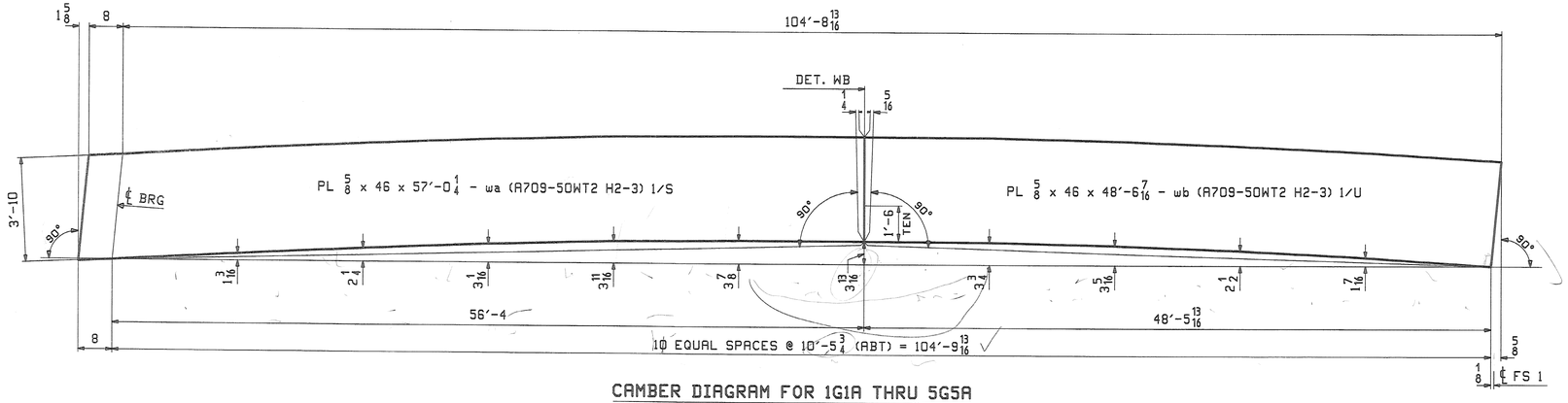

CAMBER DIAGRAM FOR 1G1A THRU 5G5A

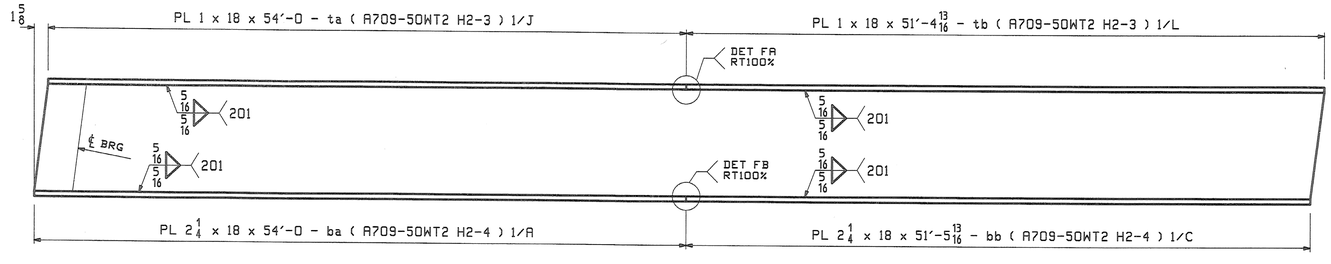

FLANGE DIAGRAM FOR 1G1A THRU 5G5A

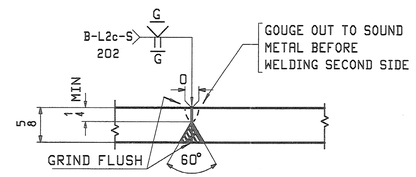

WEB PLATE SPLICE DETAIL "WB"

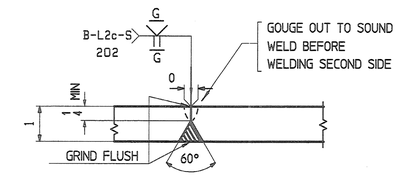

FLANGE PLATE SPLICE DETAIL "FA"

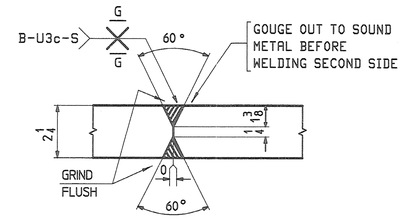

FLANGE PLATE SPLICE DETAIL "FB"

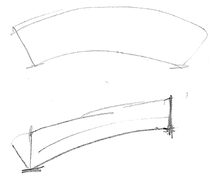

NOTES:

1. FOR GENERAL NOTES SEE DWG GN1.
2. H2-3/H2-4 DENOTES MATERIAL SUBJECT TO CHARPY V-NOTCH TEST AT H FREQ. FOR ZONE 2

REV.	DATE	REMARKS	DWN	CHK	APVL	SHOP
0					5-12-08	

MATERIAL:	SURFACE PREP. & PAINT:	HOLES:	SHOP BOLTS:
A709-50W (UN)	AS NOTED ON GN1		

DESCRIPTION: CAMBER & FLANGE DIAGRAM

CASCO BAY STEEL STRUCTURES, INC.
75 SPRING HILL ROAD SACO, MAINE 04072
PHONE (207) 282-7360 FAX. (207) 282-1179
TENSOR 2776

STRUCTURE: TH24 over Hoosic River BRIDGE NO. 41 POWNAL, VERMONT COUNTY OF BENNINGTON	DRAWN: JTB	DATE: 04/21
	CHKD: TM	DATE: 05/05
LOCATION: TOWN OF POWNAL	JOB NO.	DWG NO.
PROJ NO. BRZ 1441 (19) C/2	367	C1
CUSTOMER: VERMONT AGENCY OF TRANSPORTATION		REV. △

RECEIVED
CK'D BY WBL DR'D BY CCC
MAY 15 2008
RESUBMIT APPROVED
BY DATE

JTB Tue May 6 10:21:45 EDT 2008 /users/jobs/2776/C1.dwg

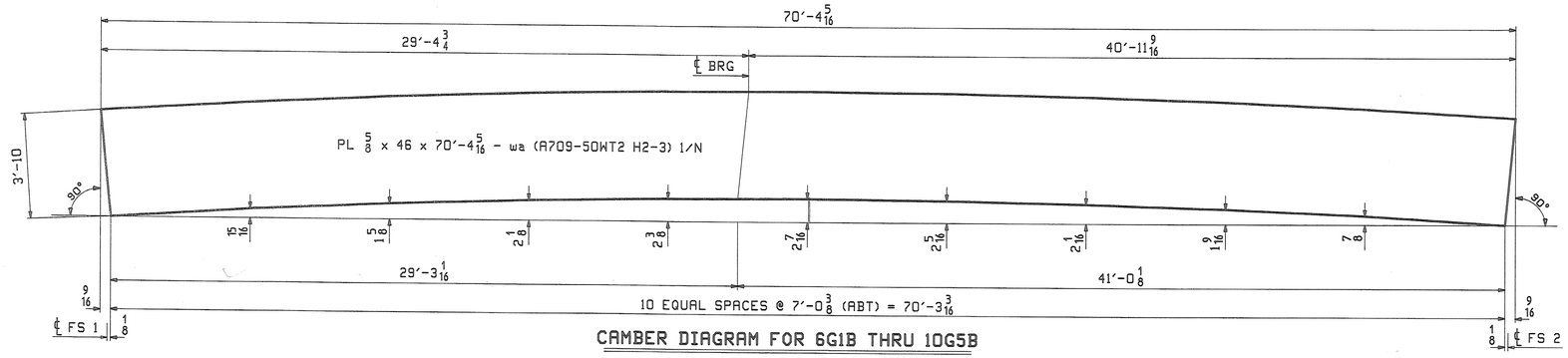

CAMBER DIAGRAM FOR 6G1B THRU 10G5B

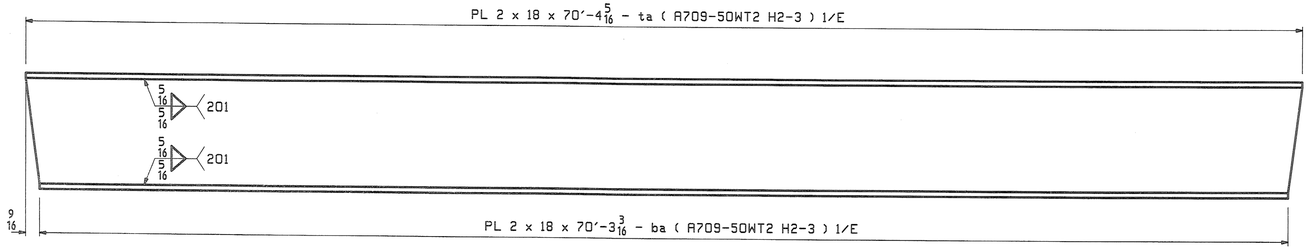

FLANGE DIAGRAM FOR 6G1B THRU 10G5B

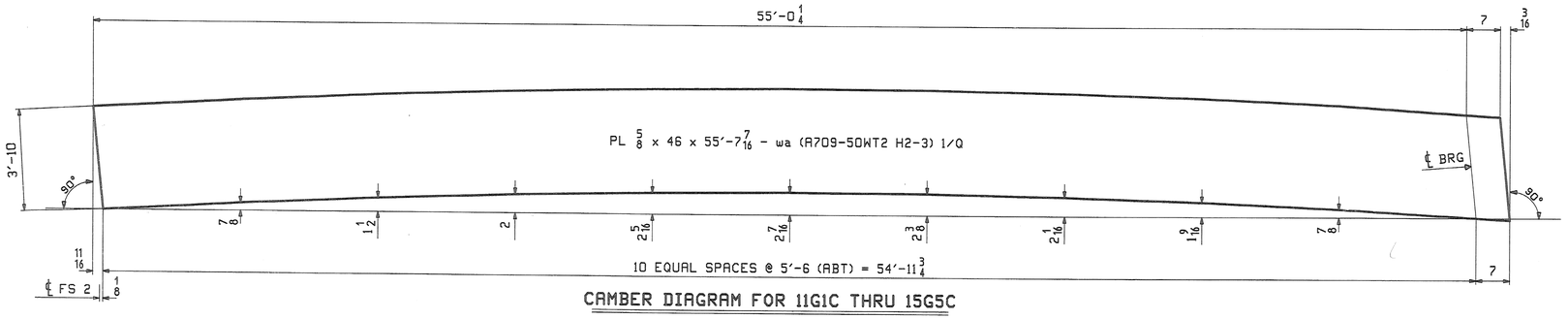

CAMBER DIAGRAM FOR 11G1C THRU 15G5C

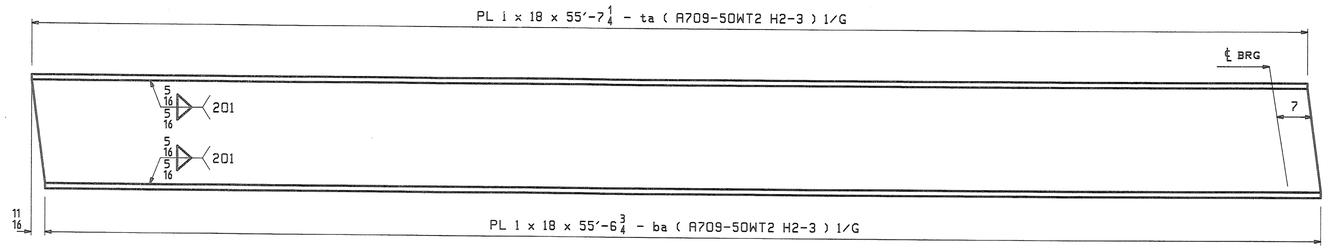

FLANGE DIAGRAM FOR 11G1C THRU 15G5C

RECEIVED
CK'D BY WDL CK'D BY CWC
MAY 15 2008
RESUBMIT APPROVED
BY DATE

NOTES:

1. FOR GENERAL NOTES SEE DWG GN1.
2. H2-3 DENOTES MATERIAL SUBJECT TO CHARPY V-NOTCH TEST AT H FREQ. FOR ZONE 2

REV.	DATE	REMARKS	DWN	CHK	APVL	SHOP
0					5-12-08	

MATERIAL:	SURFACE PREP. & PAINT:	HOLES:	SHOP BOLTS:
A709-50W (UN)	AS NOTED ON GN1		

DESCRIPTION: CAMBER & FLANGE DIAGRAM

CASCO BAY STEEL STRUCTURES, INC.
75 SPRING HILL ROAD SACO, MAINE 04072
PHONE (207) 282-7360 FAX. (207) 282-1179
TENSOR 2276

STRUCTURE: TH24 over Hoosic River BRIDGE NO. 41 POWNAL, VERMONT COUNTY OF BENNINGTON	DRAWN: JTB	DATE: 04/21
	CHK'D: TM	DATE: 05/05
LOCATION: TOWN OF POWNAL	JOB NO.	DWG NO.
PROJ NO. BRZ 1441 (19) C/2	367	C2
CUSTOMER: VERMONT AGENCY OF TRANSPORTATION		REV. △

JTB Tue May 6 13:37:46 EDT 2008 /users/jobs/2776/C2.dgn

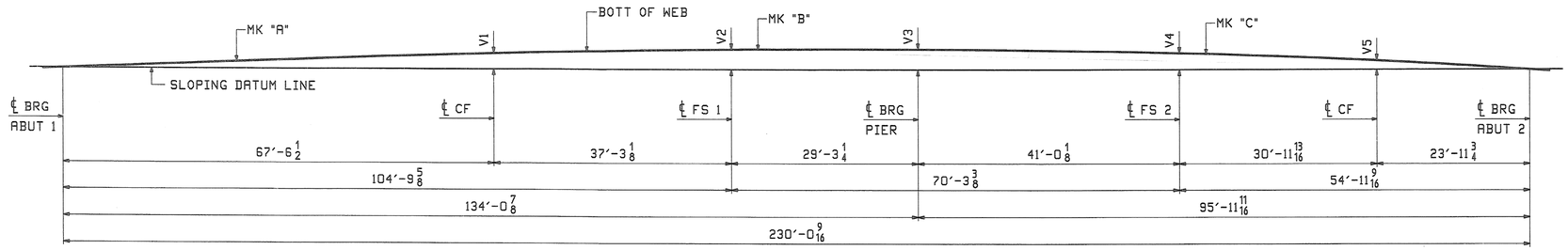

SHOP REAMING DIAGRAM

LINE	V1	V2	V3	V4	V5	"A"	"B"	"C"
1	1′-8 5/8	2′-2 1/2	2′-2 13/16	1′-9 9/16	11 13/16	1G1A	6G1B	11G1C
2	1′-8 9/16	2′-2 5/16	2′-2 5/8	1′-9 7/16	11 3/4	2G2A	7G2B	12G2C
3	1′-8 9/16	2′-2 5/16	2′-2 5/8	1′-9 7/16	11 3/4	3G3A	8G3B	13G3C
4	1′-8 9/16	2′-2 5/16	2′-2 5/8	1′-9 7/16	11 3/4	4G4A	9G4B	14G4C
5	1′-8 7/16	2′-2 3/16	2′-2 7/16	1′-9 5/16	11 11/16	5G5A	10G5B	15G5C

NOTES
FOR GENERAL NOTES SEE DWG GN1
ALL DIMENSIONS GIVEN AT BOTTOM OF WEB

REV.	DATE	REMARKS	DWN	CHK	APVL	SHOP
0					5-12-08	

MATERIAL:	SURFACE PREP. & PAINT:	HOLES:	SHOP BOLTS:

DESCRIPTION: SHOP REAMING DIAGRAM

CASCO BAY STEEL STRUCTURES, INC.
75 SPRING HILL ROAD SACO, MAINE 04072
PHONE (207) 282-7360 FAX. (207) 282-1179

TENSOR 2776

RECEIVED
CK'D BY JWC OK'D BY CWC
MAY 15 2008
RESUBMIT APPROVED ✓
BY DATE

STRUCTURE: TH24 over Hoosic River BRIDGE NO. 41 POWNAL, VERMONT COUNTY OF BENNINGTON		DRAWN: JTB	DATE: 04/27
		CHKD: TM	DATE: 05/05
LOCATION: TOWN OF POWNAL		JOB NO.	DWG NO.
PROJ NO. BRZ 1441 (19) C/2		367	SA1
CUSTOMER: VERMONT AGENCY OF TRANSPORTATION			REV. △

JTB Tue May 6 13:27:48 EDT 2008 /users/jobs/2776/sh1.dwg

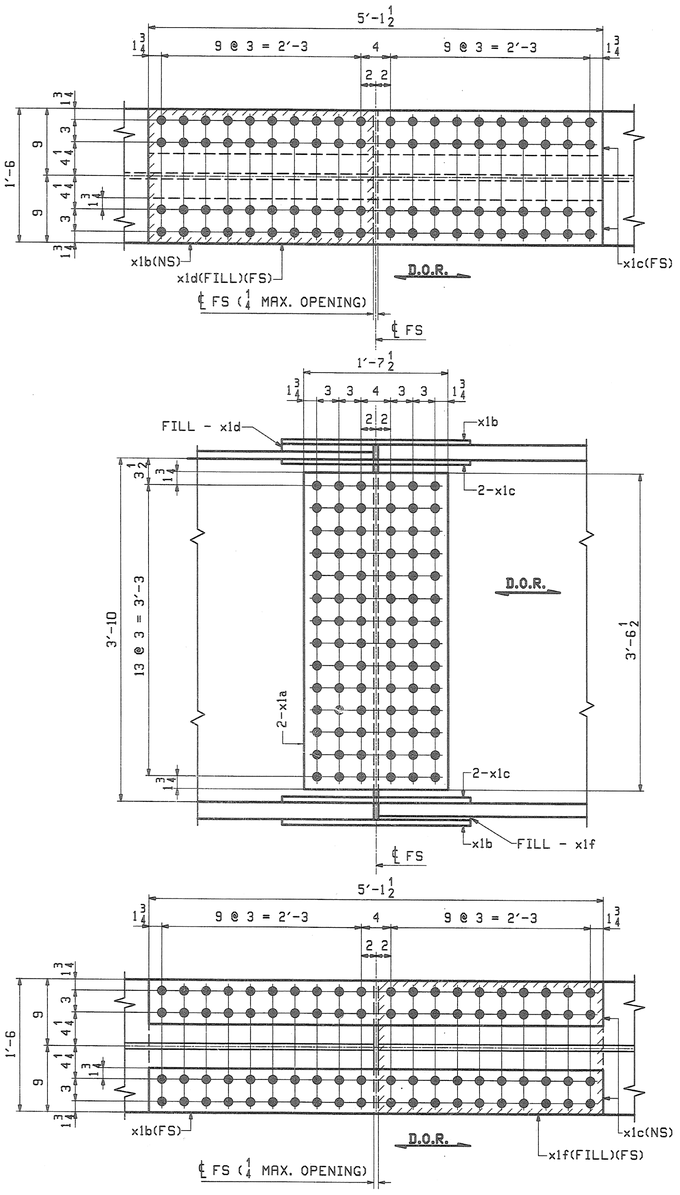

5 ~ FIELD SPLICE DETAIL ~ X1M1

FIELD SPLICE 1

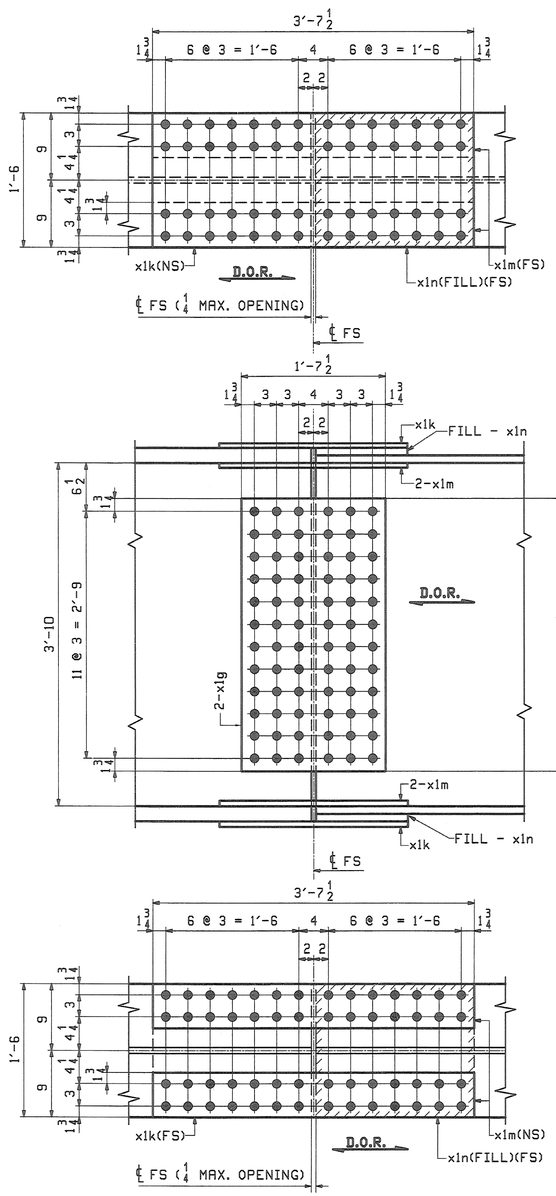

5 ~ FIELD SPLICE DETAIL ~ X1M2

FIELD SPLICE 2

ABM INFO		SHIP	BILL OF MATERIAL					JOB NO.	DRAWING NO.	REV.
									X1	
PAGE	LINE	MARK	QTY	MARK	MATERIAL	LENGTH FT	LENGTH INCHES	REMARKS	WT	PROCUREMENT NOTES
		X1M1	5		FIELD SPLICE				1165	
2	B		10	x1a	PL 5/8x42 1/2	1	7 1/2	(A709-50WT2) (H2-3)		
2	D		10	x1b	PL 5/8x18	5	1 1/2	(A709-50WT2) (H2-3)		
2	E		20	x1c	PL 5/8x6 1/2	5	1 1/2	(A709-50WT2) (H2-3)		
2	H		5	x1d	PL 1x18	2	6 5/8	FILL		
2	J		5	x1f	PL 1/4x18	2	6 5/8	FILL		
		X1M2	5		FIELD SPLICE				951	
2	C		10	x1g	PL 5/8x36 1/2	1	7 1/2	(A709-50WT2) (H2-3)		
2	F		10	x1k	PL 5/8x18	3	7 1/2	(A709-50WT2) (H2-3)		
2	G		20	x1m	PL 5/8x6 1/2	3	7 1/2	(A709-50WT2) (H2-3)		
2	K		10	x1n	PL 1x18	1	9 5/8	FILL		

NOTES:

1. FOR GENERAL NOTES SEE DRAWING GN1.
2. HOLES IN SPLICE PLATES ARE PRE-DRILLED. ENDS OF GIRDERS ARE DRILLED FROM SOLID USING SPLICE PLATES AS A TEMPLATE.
3. D.O.R. DENOTES DIRECTION OF MILL ROLLING
4. H2-3 DENOTES CHARPY V-NOTCH TESTING REQUIRED.

REV.	DATE	REMARKS	DWN	CHK	APVL	SHOP
0		~			5-12-03	

MATERIAL:	SURFACE PREP. & PAINT:	HOLES:	SHOP BOLTS:
A709-50W	SEE DWG GN1	15/16"ø	NONE

DESCRIPTION: FIELD SPLICE DETAILS

CASCO BAY STEEL STRUCTURES, INC.
75 SPRING HILL ROAD SACO, MAINE 04072
PHONE (207) 282-7360 FAX. (207) 282-1179
TENSOR 2776

STRUCTURE:	TH24 over Hoosic River BRIDGE NO. 41 POWNAL, VERMONT COUNTY OF BENNINGTON	DRAWN: JTB	DATE: 04/23
		CHKD: TM	DATE: 05/05
LOCATION:	TOWN OF POWNAL	JOB NO.	DWG NO.
PROJ NO.	BRZ 1441 (19) C/2	367	X1
CUSTOMER:	VERMONT AGENCY OF TRANSPORTATION		REV. △

RESUBMIT ____ APPROVED ✓
BY ____ DATE

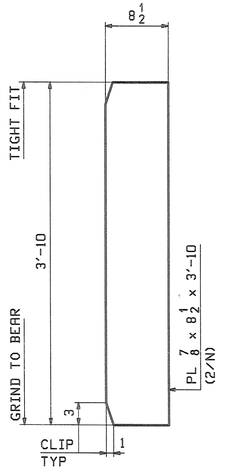

6 ~ x2a
BRG STIFF - FASCIA

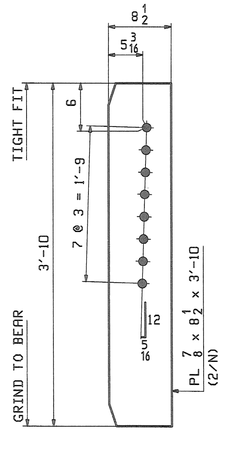

9 ~ x2b
BRG STIFF - HIGH END
DROPS $1\frac{1}{2}$ to 2

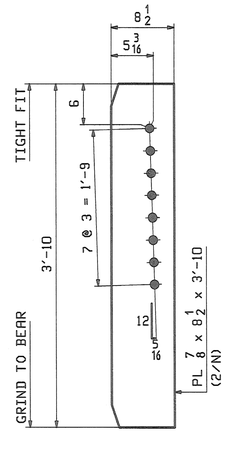

9 ~ x2c
BRG STIFF - LOW END
DROPS $1\frac{1}{2}$ to 2

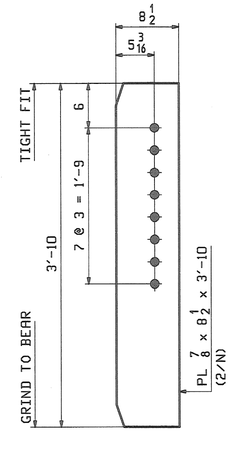

6 ~ x2d
BRG STIFF - DROP = 0

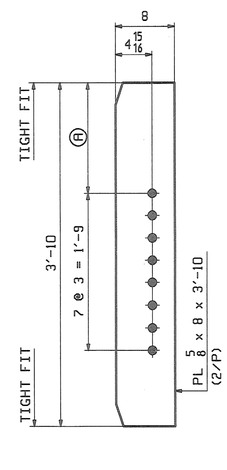

MARK "A"
INT DIAPH CONN.

MARK "A"	QTY	Ⓐ	
x2f	50	$1'-1\frac{1}{4}$	LOW END & DROP = 0
x2g	30	1'-3	HIGH END (DROPS $1\frac{9}{16}$ to $1\frac{15}{16}$)

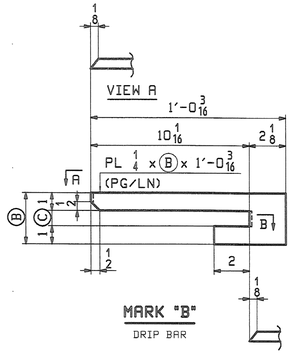

MARK "B"
DRIP BAR

SECTION B

MARK "B"	QTY	Ⓑ	Ⓒ	PG/LN	
x2k	1	$4\frac{1}{4}$	$2\frac{1}{4}$	2/Q	ABUT 1
x2m	1	4	2	2/Q	PIER
x2n	1	3	1	2/R	ABUT 2

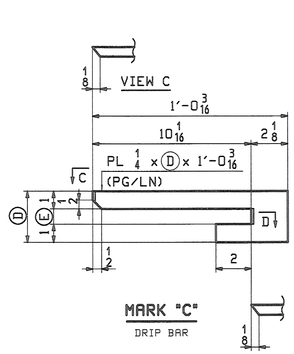

MARK "C"
DRIP BAR

SECTION D

MARK "C"	QTY	Ⓓ	Ⓔ	PG/LN	
x2p	1	$4\frac{1}{4}$	$2\frac{1}{4}$	2/Q	ABUT 1
x2t	1	4	2	2/Q	PIER
x2v	1	3	1	2/R	ABUT 2

NOTES:
ALL MATERIAL SHALL BE A709-50W.
ALL BOLT HOLES SHALL BE $\frac{15}{16}$"Ø FOR $\frac{7}{8}$"Ø HSB.
FOR GENERAL NOTES SEE DRAWING GN1.

RECEIVED
CK'D BY WBL CK'D BY CWC
MAY 15 2008
RESUBMIT ____ APPROVED ✓
BY DATE

REV.	DATE	REMARKS	DWN	CHK	APVL	SHOP
0					5-12-08	

MATERIAL:	SURFACE PREP. & PAINT:	HOLES:	SHOP BOLTS:
A709-50W	AS NOTED ON GN1	$\frac{15}{16}$Ø	NONE

DESCRIPTION: GIRDER STANDARD DETAILS

CASCO BAY STEEL STRUCTURES, INC.
75 SPRING HILL ROAD SACO, MAINE 04072
PHONE (207) 282-7360 FAX. (207) 282-1179
TENSOR 2276

STRUCTURE: TH24 over Hoosic River
BRIDGE NO. 41
POWNAL, VERMONT
COUNTY OF BENNINGTON

DRAWN:	DATE:
JTB	04/24
CHK'D:	DATE:
TM	05/05

LOCATION:	TOWN OF POWNAL	JOB NO.	DWG NO.
PROJ NO.	BRZ 1441 (19) C/2	367	X2
CUSTOMER:	VERMONT AGENCY OF TRANSPORTATION		REV. △

JTB Tue May 6 13:37:54 EDT 2008 /users/jobs/2276/x2 : Rev0

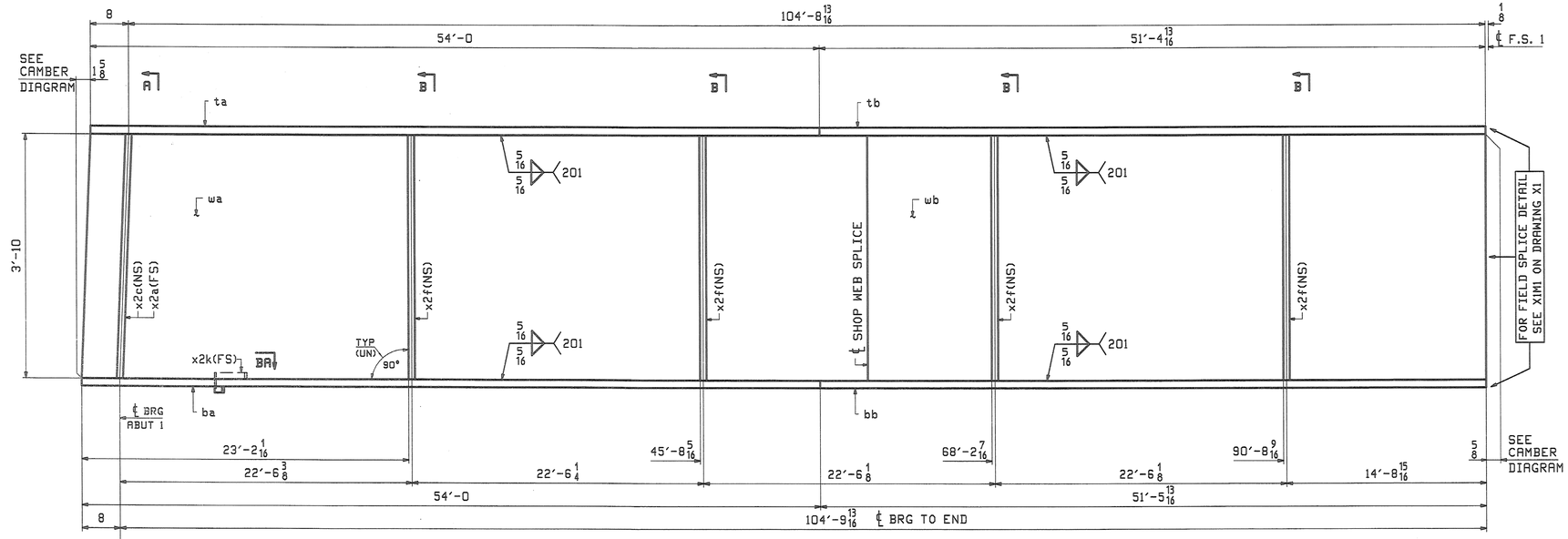

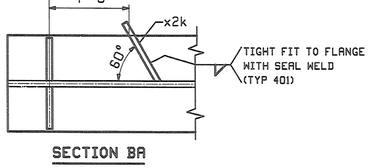

SECTION BA

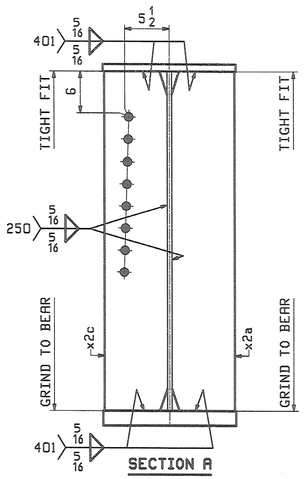

SECTION A

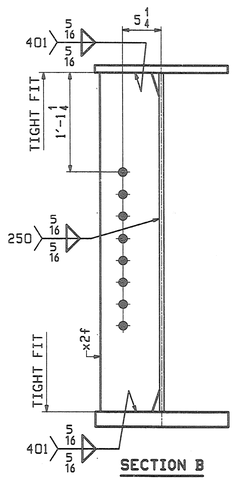

SECTION B

ONE - GIRDER - 1G1A

FOR GIRDER STANDARDS SEE DRAWINGS X1 & X2.
FOR CAMBER & FLANGE DIAGRAMS SEE DRAWING C1.
FOR GENERAL NOTES & WELD PROCEDURES SEE DRAWING GN1.
H2-3/H2-4 DENOTES MATERIAL SUBJECT TO CHARPY V-NOTCH TESTING.

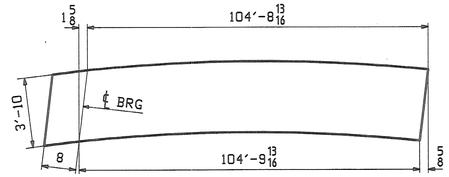

ORIENTATION DIAGRAM
FOR CAMBER SEE DWG C1

ABM INFO		SHIP	BILL OF MATERIAL					JOB NO.	DRAWING NO.	REV.
								367	1	
PAGE	LINE	MARK	QTY	MARK	MATERIAL	LENGTH FT	LENGTH INCHES	REMARKS	WT	PROCUREMENT NOTES
		1G1A	1		GIRDER				31776	
1	S		1	ωa	PL 5/8x46	57	0 1/4	(A709-50WT2) (H2-3)		
1	U		1	ωb	PL 5/8x46	48	6 7/16	(A709-50WT2) (H2-3)		
1	J		1	ta	PL 1x18	54	0	(A709-50WT2) (H2-3)		
1	L		1	tb	PL 1x18	51	4 13/16	(A709-50WT2) (H2-3)		
1	A		1	ba	PL 2 1/4x18	54	0	(A709-50WT2) (H2-4)		
1	C		1	bb	PL 2 1/4x18	51	5 13/16	(A709-50WT2) (H2-4)		
2	N		1	x2a	PL 7/8x8 1/2	3	10	MIE		
2	N		1	x2c	PL 7/8x8 1/2	3	10	MIE		
2	P		4	x2f	PL 5/8x8	3	10			
2	Q		1	x2k	PL 1/4x4 1/4	1	0 3/16			

REV.	DATE	REMARKS	DWN	CHK	APVL	SHOP
0					5-12-08	

MATERIAL:	SURFACE PREP. & PAINT:	HOLES:	SHOP BOLTS:
A709-50W (UN)	SEE DWG GN1	15/16"ø	NONE

DESCRIPTION: GIRDER - 1G1A

CASCO BAY STEEL STRUCTURES, INC.
75 SPRING HILL ROAD SACO, MAINE 04072
PHONE (207) 282-7360 FAX. (207) 282-1179
TENSOR 2776

RECEIVED
CK'D BY WDL CK'D BY CWC
MAY 15 2008
RESUBMIT ____ APPROVED ✓
BY DATE

STRUCTURE:	TH24 over Hoosic River BRIDGE NO. 41 POWNAL, VERMONT COUNTY OF BENNINGTON	DRAWN: JTB	DATE: 04/24
		CHK'D: TM	DATE: 05/05
LOCATION:	TOWN OF POWNAL	JOB NO.	DWG NO.
PROJ NO.	BRZ 1441 (19) C/2	367	1
CUSTOMER:	VERMONT AGENCY OF TRANSPORTATION		REV. △

JTB Tue May 6 13:37:57 EDT 2008 /users/jobs/2776/1 : RevO

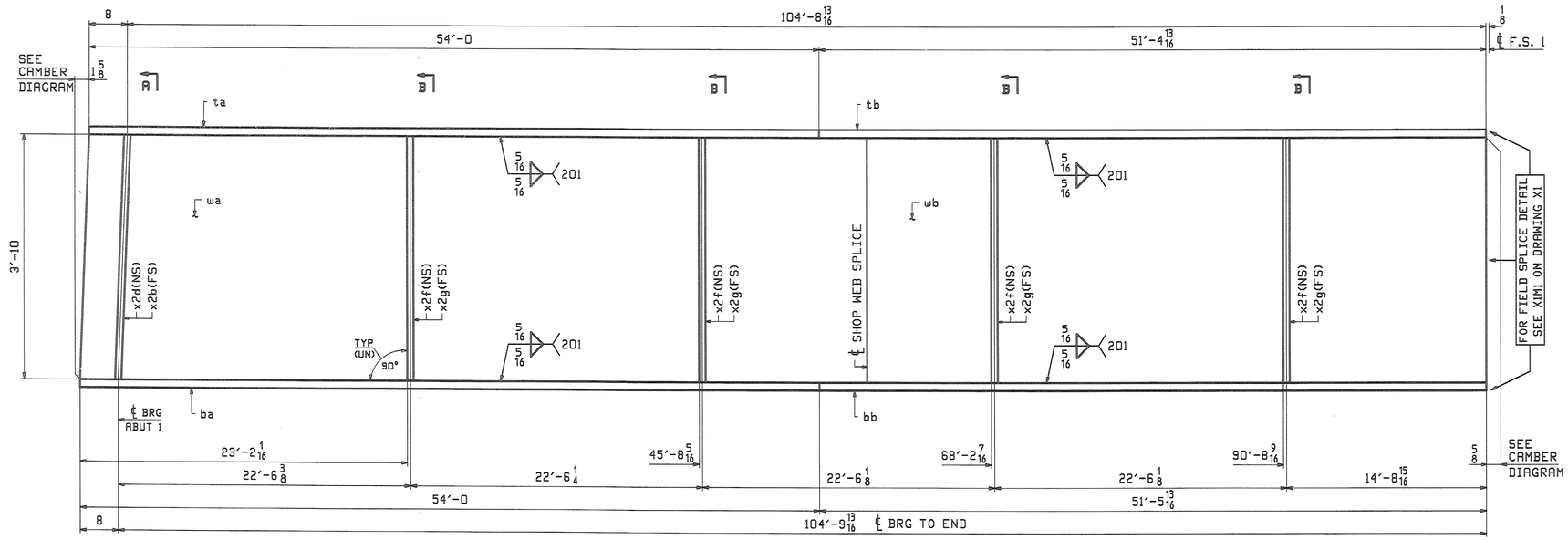

ONE - GIRDER - 2G2A

FOR GIRDER STANDARDS SEE DRAWINGS X1 & X2.
FOR CAMBER & FLANGE DIAGRAMS SEE DRAWING C1.
FOR GENERAL NOTES & WELD PROCEDURES SEE DRAWING GN1.
H2-3/H2-4 DENOTES MATERIAL SUBJECT TO CHARPY V-NOTCH TESTING.

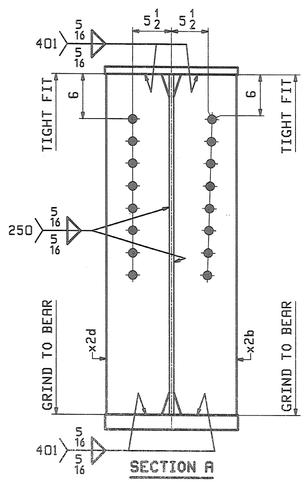

SECTION A

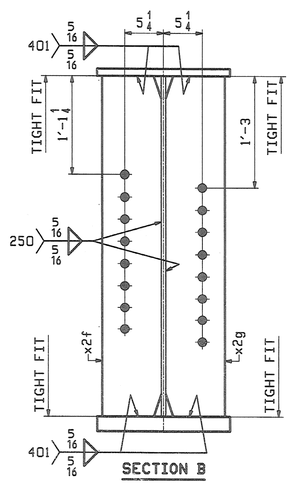

SECTION B

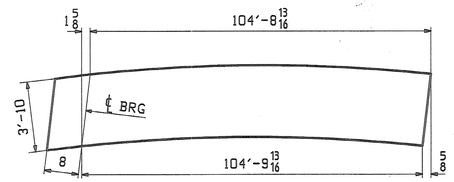

ORIENTATION DIAGRAM
FOR CAMBER SEE DWG C1

ABM INFO		SHIP	BILL OF MATERIAL					JOB NO. 367	DRAWING NO. 2	REV.
PAGE	LINE	MARK	QTY	MARK	MATERIAL	LENGTH FT	LENGTH INCHES	REMARKS	WT	PROCUREMENT NOTES
		2G2A	1		GIRDER				32035	
1	S		1	wa	PL 5/8x46	57	0 1/4	(A709-50WT2) (H2-3)		
1	U		1	wb	PL 5/8x46	48	6 7/16	(A709-50WT2) (H2-3)		
1	J		1	ta	PL 1x18	54	0	(A709-50WT2) (H2-3)		
1	L		1	tb	PL 1x18	51	4 13/16	(A709-50WT2) (H2-3)		
1	A		1	ba	PL 2 1/4x18	54	0	(A709-50WT2) (H2-4)		
1	C		1	bb	PL 2 1/4x18	51	5 13/16	(A709-50WT2) (H2-4)		
2	N		1	x2b	PL 7/8x8 1/2	3	10	M1E		
2	N		1	x2d	PL 7/8x8 1/2	3	10	M1E		
2	P		4	x2f	PL 5/8x8	3	10			
2	P		4	x2g	PL 5/8x8	3	10			

REV.	DATE	REMARKS	DWN	CHK	APVL	SHOP
0					5-12-08	

MATERIAL:	SURFACE PREP. & PAINT:	HOLES:	SHOP BOLTS:
A709-50W (UN)	SEE DWG GN1	15/16"ø	NONE

DESCRIPTION: GIRDER - 2G2A

CASCO BAY STEEL STRUCTURES, INC.
75 SPRING HILL ROAD SACO, MAINE 04072
PHONE (207) 282-7360 FAX. (207) 282-1179
TENSOR 2776

STRUCTURE: TH24 over Hoosic River
BRIDGE NO. 41
POWNAL, VERMONT
COUNTY OF BENNINGTON

DRAWN:	DATE:
JTB	04/24
CHKD: TM	DATE: 05/05

LOCATION:	TOWN OF POWNAL	JOB NO.	DWG NO.
PROJ NO.	BRZ 1441 (19) C/2	367	2
CUSTOMER:	VERMONT AGENCY OF TRANSPORTATION		REV. △

RECEIVED
CK'D BY WBL CK'D BY CWC
MAY 15 2008
RESUBMIT ____ APPROVED ✓
BY DATE

ABM INFO		SHIP	BILL OF MATERIAL					JOB NO.	DRAWING NO.	REV.
								367	3	
PAGE	LINE	MARK	QTY	MARK	MATERIAL	LENGTH FT	LENGTH INCHES	REMARKS	WT	PROCUREMENT NOTES
		3G3A	1		GIRDER				32035	
1	S		1	wa	PL $\frac{5}{8}$x46	57	$0\frac{1}{4}$	(A709-50WT2) (H2-3)		
1	U		1	wb	PL $\frac{5}{8}$x46	48	$6\frac{7}{16}$	(A709-50WT2) (H2-3)		
1	J		1	ta	PL 1x18	54	0	(A709-50WT2) (H2-3)		
1	L		1	tb	PL 1x18	51	$4\frac{13}{16}$	(A709-50WT2) (H2-3)		
1	A		1	ba	PL $2\frac{1}{4}$x18	54	0	(A709-50WT2) (H2-4)		
1	C		1	bb	PL $2\frac{1}{4}$x18	51	$5\frac{13}{16}$	(A709-50WT2) (H2-4)		
2	N		1	x2b	PL $\frac{7}{8}$x$8\frac{1}{2}$	3	10	M1E		
2	N		1	x2d	PL $\frac{7}{8}$x$8\frac{1}{2}$	3	10	M1E		
2	P		4	x2f	PL $\frac{5}{8}$x8	3	10			
2	P		4	x2g	PL $\frac{5}{8}$x8	3	10			

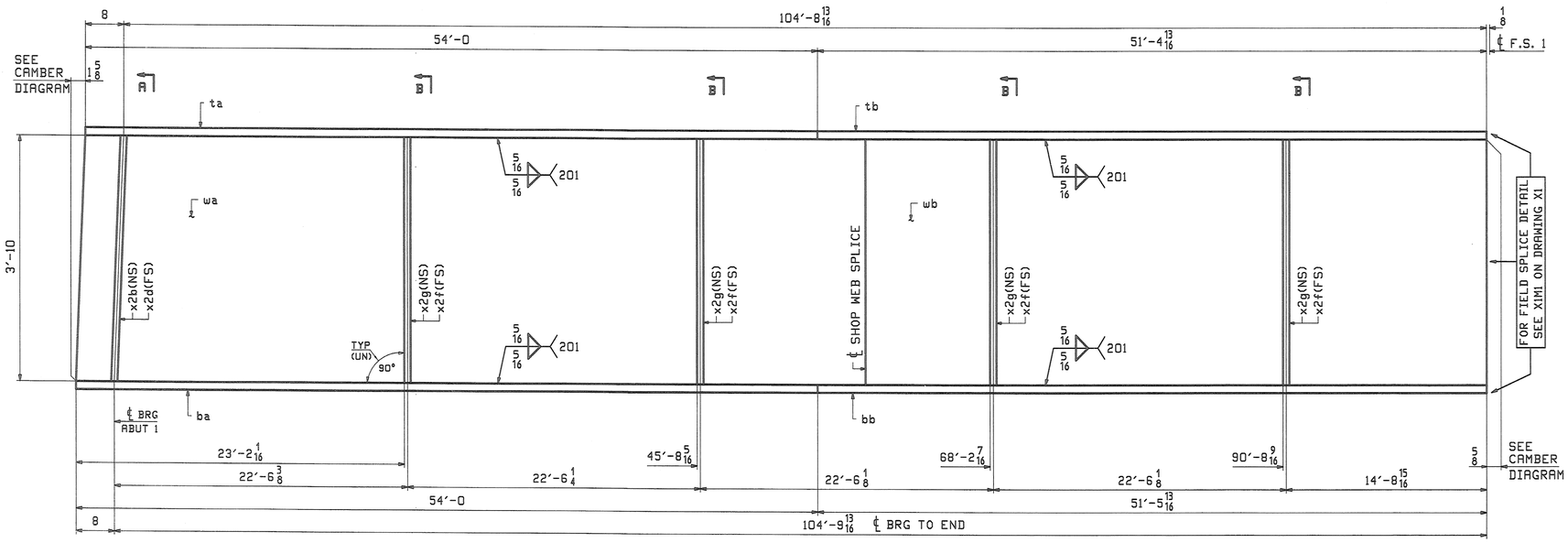

ONE - GIRDER - 3G3A

FOR GIRDER STANDARDS SEE DRAWINGS X1 & X2.
FOR CAMBER & FLANGE DIAGRAMS SEE DRAWING C1.
FOR GENERAL NOTES & WELD PROCEDURES SEE DRAWING GN1.
H2-3/H2-4 DENOTES MATERIAL SUBJECT TO CHARPY V-NOTCH TESTING.

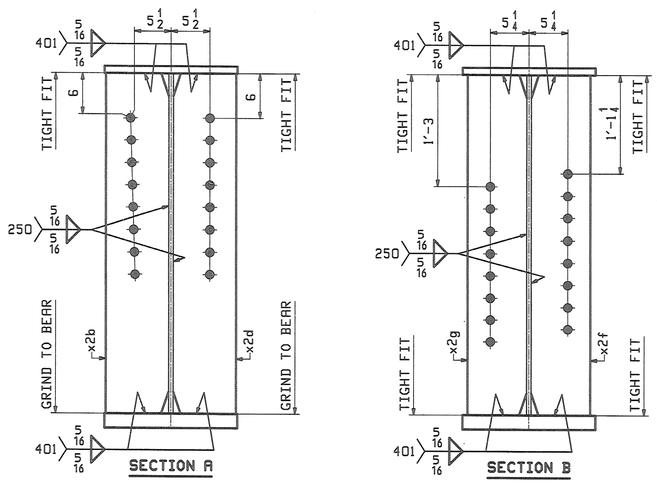

SECTION A

SECTION B

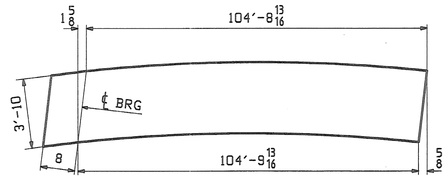

ORIENTATION DIAGRAM
FOR CAMBER SEE DWG C1

REV.	DATE	REMARKS	DWN	CHK	APVL	SHOP
0					5-12-08	

MATERIAL:	SURFACE PREP. & PAINT:	HOLES:	SHOP BOLTS:
A709-50W (UN)	SEE DWG GN1	$\frac{15}{16}$"ø	NONE

DESCRIPTION: GIRDER - 3G3A

CASCO BAY STEEL STRUCTURES, INC.
75 SPRING HILL ROAD SACO, MAINE 04072
PHONE (207) 282-7360 FAX. (207) 282-1179
TENSOR 2776

STRUCTURE: TH24 over Hoosic River
BRIDGE NO. 41
POWNAL, VERMONT
COUNTY OF BENNINGTON

DRAWN: JTB	DATE: 04/24		
CHKD: TM	DATE: 05/05		
LOCATION: TOWN OF POWNAL		JOB NO.	DWG NO.
PROJ NO. BRZ 1441 (19) C/2		367	3
CUSTOMER: VERMONT AGENCY OF TRANSPORTATION			REV. △

RECEIVED
CK'D BY WDL OK'D BY CWC
MAY 15 2008
RESUBMIT ____ APPROVED ✓
BY DATE

JTB Tue May 6 13:37:59 EDT 2008 /users/jobs/2776/3 : Rev0

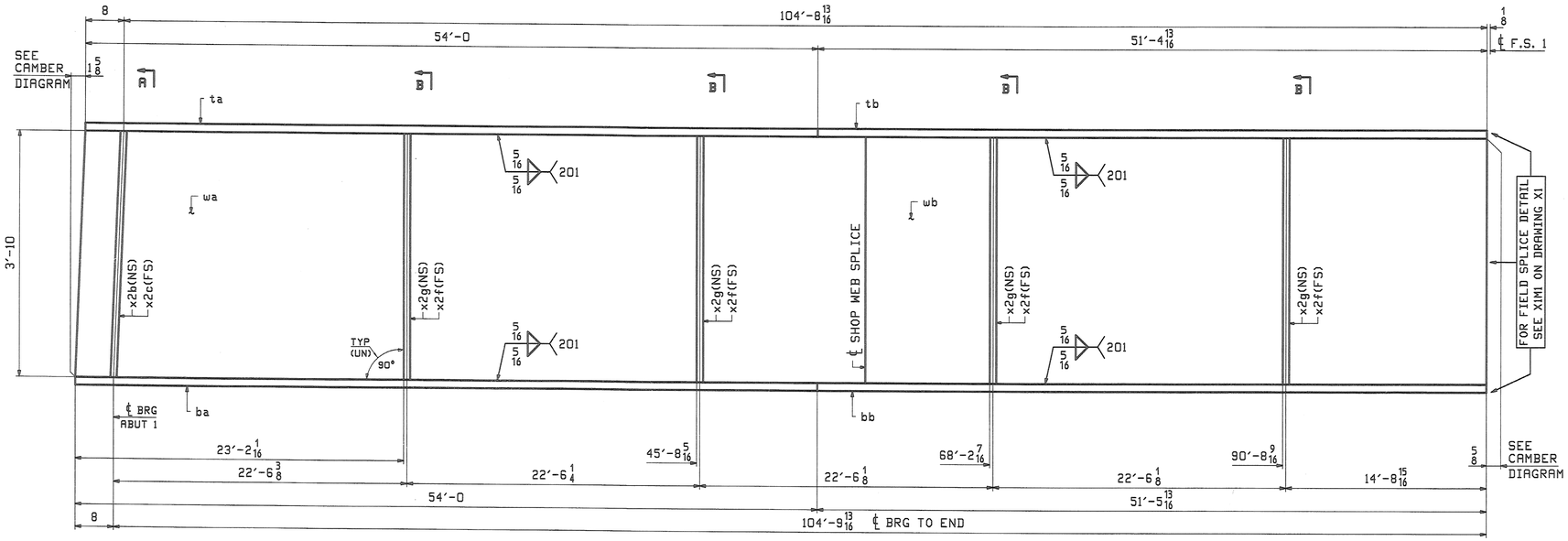

ONE - GIRDER - 4G4A

FOR GIRDER STANDARDS SEE DRAWINGS X1 & X2.
FOR CAMBER & FLANGE DIAGRAMS SEE DRAWING C1.
FOR GENERAL NOTES & WELD PROCEDURES SEE DRAWING GN1.
H2-3/H2-4 DENOTES MATERIAL SUBJECT TO CHARPY V-NOTCH TESTING.

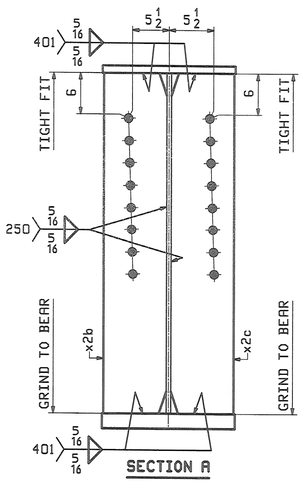

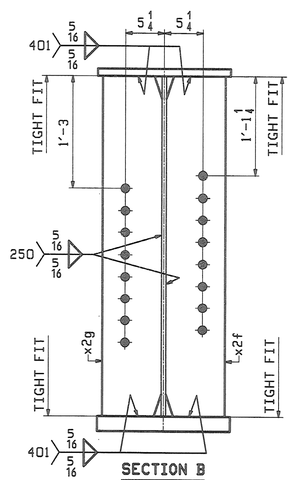

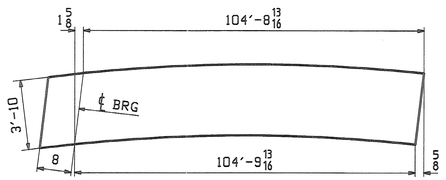

ORIENTATION DIAGRAM
FOR CAMBER SEE DWG C1

ABM INFO PAGE	ABM INFO LINE	SHIP MARK	QTY	MARK	MATERIAL	LENGTH FT	LENGTH INCHES	REMARKS	WT	PROCUREMENT NOTES
		4G4A	1		GIRDER				32035	
1	S		1	wa	PL 5/8x46	57	0 1/4	(A709-50WT2) (H2-3)		
1	U		1	wb	PL 5/8x46	48	6 7/16	(A709-50WT2) (H2-3)		
1	J		1	ta	PL 1x18	54	0	(A709-50WT2) (H2-3)		
1	L		1	tb	PL 1x18	51	4 13/16	(A709-50WT2) (H2-3)		
1	A		1	ba	PL 2 1/4x18	54	0	(A709-50WT2) (H2-4)		
1	C		1	bb	PL 2 1/4x18	51	5 13/16	(A709-50WT2) (H2-4)		
2	N		1	x2b	PL 7/8x8 1/2	3	10	MIE		
2	N		1	x2c	PL 7/8x8 1/2	3	10	MIE		
2	P		4	x2f	PL 5/8x8	3	10			
2	P		4	x2g	PL 5/8x8	3	10			

BILL OF MATERIAL — JOB NO. 367 — DRAWING NO. 4 — REV.

RECEIVED
CK'D BY WBL CK'D BY CWC
MAY 15 2008
RESUBMIT ____ APPROVED ____
BY DATE

REV.	DATE	REMARKS	DWN	CHK	APVL	SHOP
0					5-12-08	

MATERIAL:	SURFACE PREP. & PAINT:	HOLES:	SHOP BOLTS:
A709-50W (UN)	SEE DWG GN1	15/16"ø	NONE

DESCRIPTION: GIRDER - 4G4A

CASCO BAY STEEL STRUCTURES, INC.
75 SPRING HILL ROAD SACO, MAINE 04072
PHONE (207) 282-7360 FAX. (207) 282-1179
TENSOR 2776

STRUCTURE: TH24 over Hoosic River BRIDGE NO. 41 POWNAL, VERMONT COUNTY OF BENNINGTON		DRAWN: JTB	DATE: 04/24
		CHKD: TM	DATE: 05/05
LOCATION: TOWN OF POWNAL		JOB NO.	DWG NO.
PROJ NO. BRZ 1441 (19) C/2		367	4
CUSTOMER: VERMONT AGENCY OF TRANSPORTATION			REV. △

JTB Tue May 6 103600 EDT 2008 /users/jobs/2776/4.1 Rev0

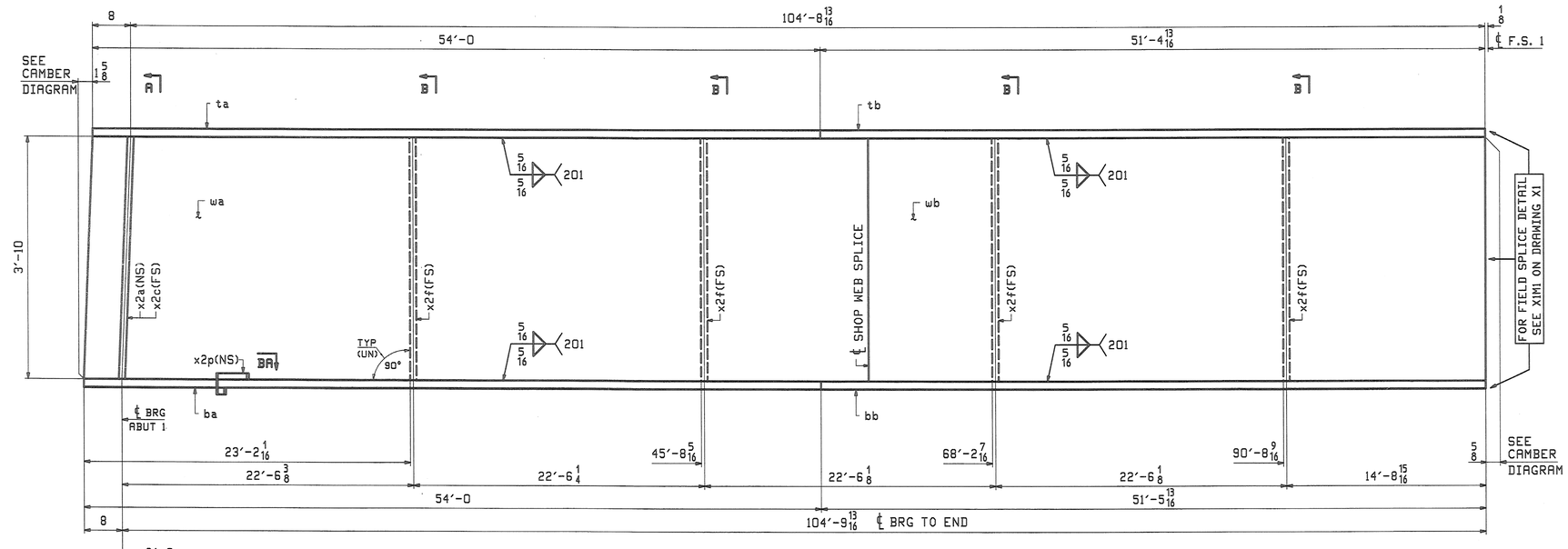

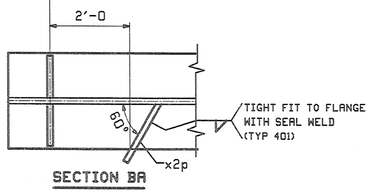

SECTION BA

ONE - GIRDER - 5G5A

FOR GIRDER STANDARDS SEE DRAWINGS X1 & X2.
FOR CAMBER & FLANGE DIAGRAMS SEE DRAWING C1.
FOR GENERAL NOTES & WELD PROCEDURES SEE DRAWING GN1.
H2-3/H2-4 DENOTES MATERIAL SUBJECT TO CHARPY V-NOTCH TESTING.

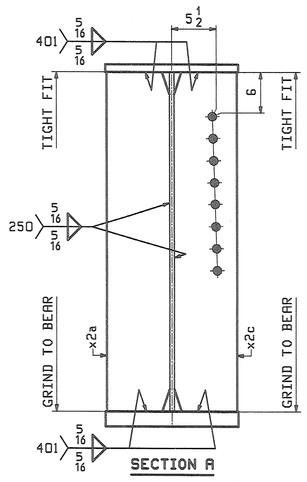

SECTION A

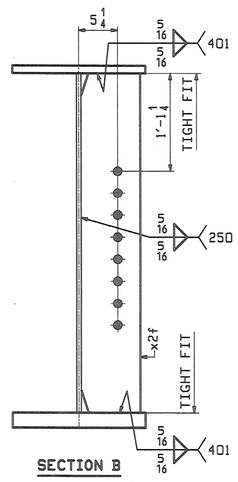

SECTION B

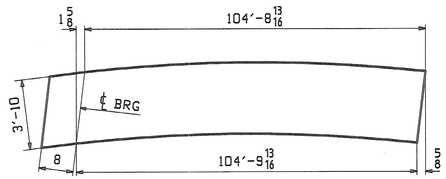

ORIENTATION DIAGRAM
FOR CAMBER SEE DWG C1

ABM INFO		SHIP	BILL OF MATERIAL					JOB NO. 367	DRAWING NO. 5	REV.
PAGE	LINE	MARK	QTY	MARK	MATERIAL	LENGTH FT	LENGTH INCHES	REMARKS	WT	PROCUREMENT NOTES
		5G5A	1		GIRDER				31776	
1	S		1	wa	PL 5/8x46	57	0 1/4	(A709-50WT2) (H2-3)		
1	U		1	wb	PL 5/8x46	48	6 7/16	(A709-50WT2) (H2-3)		
1	J		1	ta	PL 1x18	54	0	(A709-50WT2) (H2-3)		
1	L		1	tb	PL 1x18	51	4 13/16	(A709-50WT2) (H2-3)		
1	A		1	ba	PL 2 1/4x18	54	0	(A709-50WT2) (H2-4)		
1	C		1	bb	PL 2 1/4x18	51	5 13/16	(A709-50WT2) (H2-4)		
2	N		1	x2a	PL 7/8x8 1/2	3	10	MIE		
2	N		1	x2c	PL 7/8x8 1/2	3	10	MIE		
2	P		4	x2f	PL 5/8x8	3	10			
2	Q		1	x2p	PL 1/4x4 1/4	1	0 3/16			

REV.	DATE	REMARKS	DWN	CHK	APVL	SHOP
0					5-12-08	

MATERIAL:	SURFACE PREP. & PAINT:	HOLES:	SHOP BOLTS:
A709-50W (UN)	SEE DWG GN1	15/16"ø	NONE

DESCRIPTION: GIRDER - 5G5A

CASCO BAY STEEL STRUCTURES, INC.
75 SPRING HILL ROAD SACO, MAINE 04072
PHONE (207) 282-7360 FAX. (207) 282-1179
TENSOR 2776

STRUCTURE: TH24 over Hoosic River BRIDGE NO. 41 POWNAL, VERMONT COUNTY OF BENNINGTON	DRAWN: JTB	DATE: 04/24
	CHKD: TM	DATE: 05/05
LOCATION: TOWN OF POWNAL	JOB NO. 367	DWG NO. 5
PROJ NO. BRZ 1441 (19) C/2		REV. △
CUSTOMER: VERMONT AGENCY OF TRANSPORTATION		

RECEIVED
OK'D BY WNL OK'D BY CWO
MAY 15 2008
RESUBMIT ____ APPROVED ✓
BY DATE

JTB Tue May 6 13:38:05 EDT 2008 /users/jobs/2776/S1.Rev0

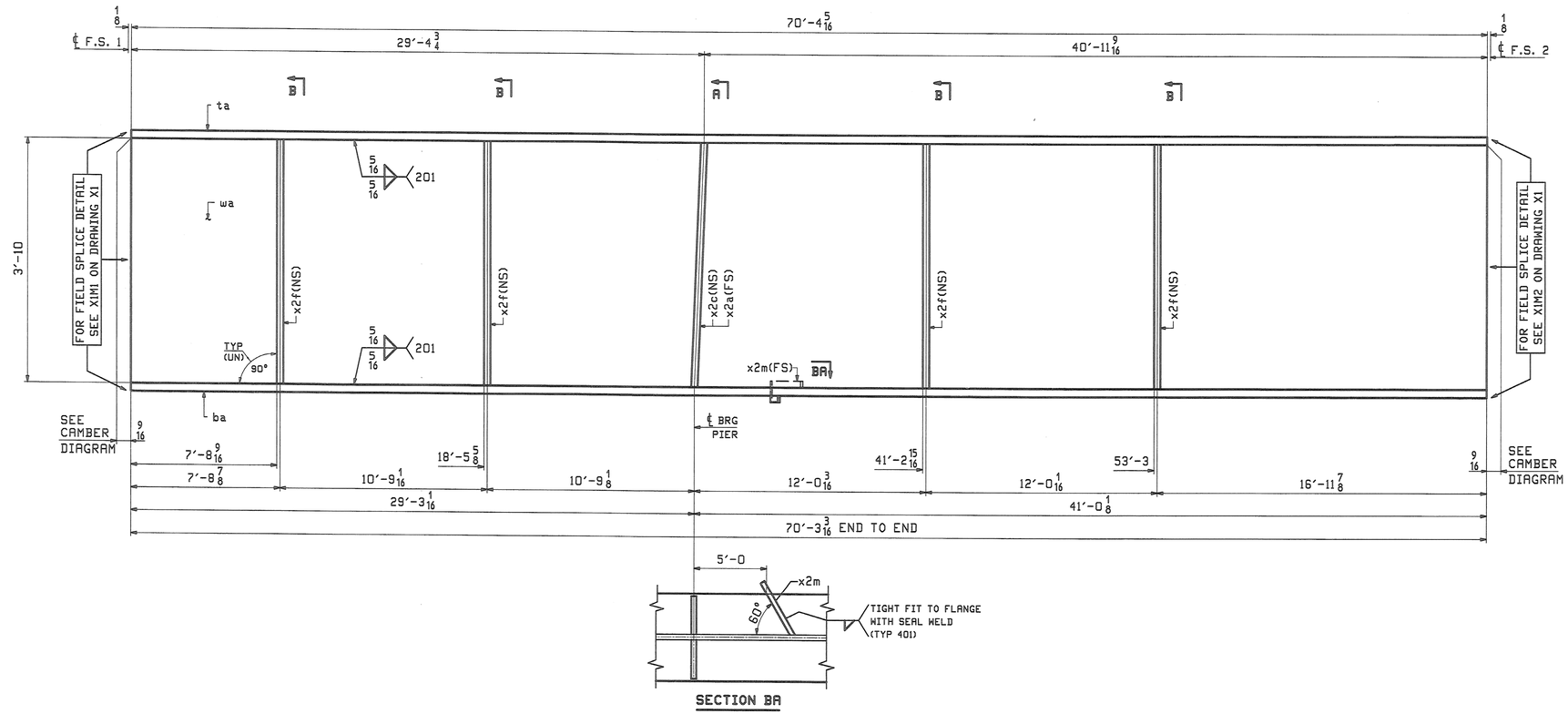

ONE - GIRDER - 6G1B

FOR GIRDER STANDARDS SEE DRAWINGS X1 & X2.
FOR CAMBER & FLANGE DIAGRAMS SEE DRAWING C2.
FOR GENERAL NOTES & WELD PROCEDURES SEE DRAWING GN1.
H2-3 DENOTES MATERIAL SUBJECT TO CHARPY V-NOTCH TESTING.

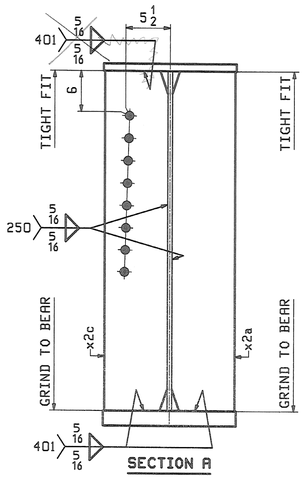

SECTION A

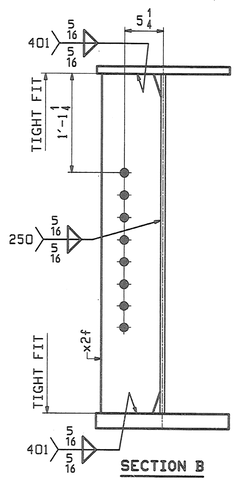

SECTION B

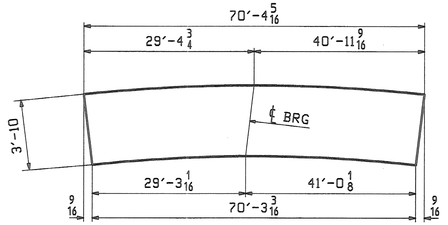

ORIENTATION DIAGRAM
FOR CAMBER SEE DWG C2

ABM INFO		SHIP	BILL OF MATERIAL					JOB NO. 367	DRAWING NO. 6	REV.
PAGE	LINE	MARK	QTY	MARK	MATERIAL	LENGTH FT	LENGTH INCHES	REMARKS	WT	PROCUREMENT NOTES
		6G1B	1		GIRDER				24568	
1	N		1	wa	PL 5/8x46	70	4 5/16	(A709-50WT2) (H2-3)		
1	E		1	ta	PL 2x18	70	4 5/16	(A709-50WT2) (H2-3)		
1	E		1	ba	PL 2x18	70	3 3/16	(A709-50WT2) (H2-3)		
2	N		1	x2a	PL 7/8x8 1/2	3	10	M1E		
2	N		1	x2c	PL 7/8x8 1/2	3	10	M1E		
2	P		4	x2f	PL 5/8x8	3	10			
2	Q		1	x2m	PL 1/4x4	1	0 3/16			

REV.	DATE	REMARKS	DWN	CHK	APVL	SHOP
0					5-12-08	

MATERIAL:	SURFACE PREP. & PAINT:	HOLES:	SHOP BOLTS:
A709-50W (UN)	SEE DWG GN1	15/16"ø	NONE

DESCRIPTION: GIRDER - 6G1B

CASCO BAY STEEL STRUCTURES, INC.
75 SPRING HILL ROAD SACO, MAINE 04072
PHONE (207) 282-7360 FAX. (207) 282-1179
TENSOR 2776

STRUCTURE:	TH24 over Hoosic River BRIDGE NO. 41 POWNAL, VERMONT COUNTY OF BENNINGTON	DRAWN: JTB	DATE: 04/25
		CHKD: TM	DATE: 05/05
LOCATION:	TOWN OF POWNAL	JOB NO.	DWG NO.
PROJ NO.	BRZ 1441 (19) C/2	367	6
CUSTOMER:	VERMONT AGENCY OF TRANSPORTATION		REV. △

RECEIVED
CK'D BY WAL CK'D BY CWC
MAY 15 2008
RESUBMIT ____ APPROVED AS NOTED
BY DATE

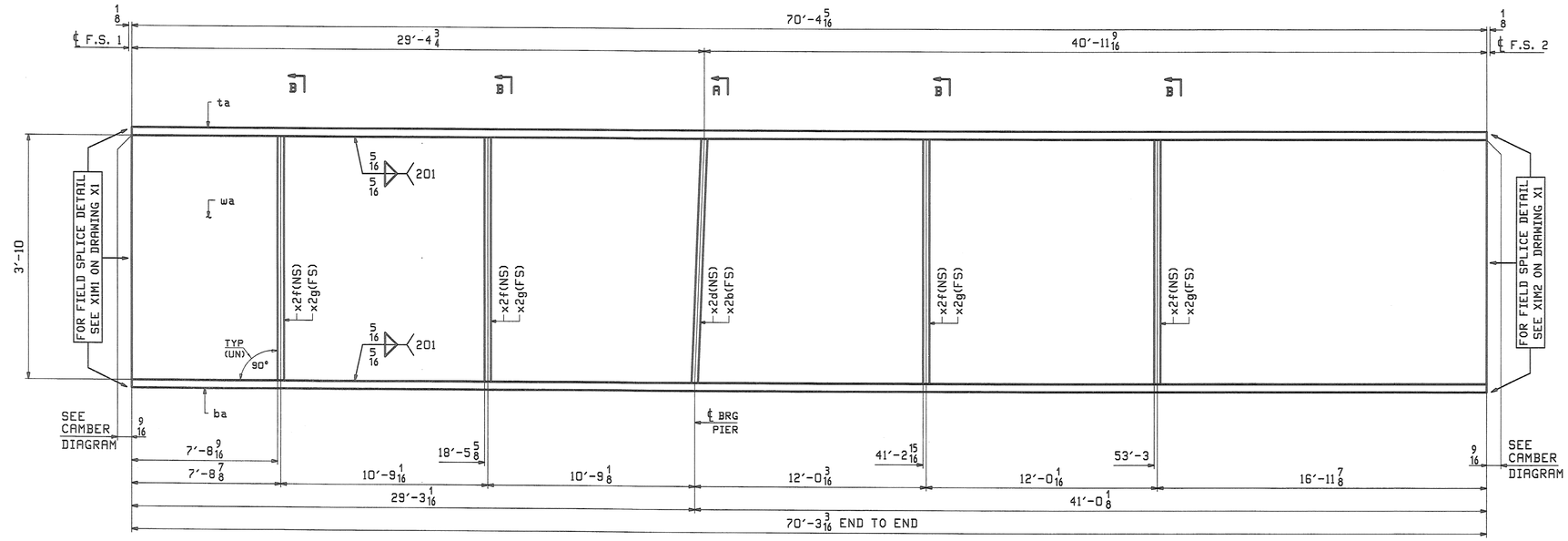

ONE - GIRDER - 7G2B

FOR GIRDER STANDARDS SEE DRAWINGS X1 & X2.
FOR CAMBER & FLANGE DIAGRAMS SEE DRAWING C2.
FOR GENERAL NOTES & WELD PROCEDURES SEE DRAWING GN1.
H2-3 DENOTES MATERIAL SUBJECT TO CHARPY V-NOTCH TESTING.

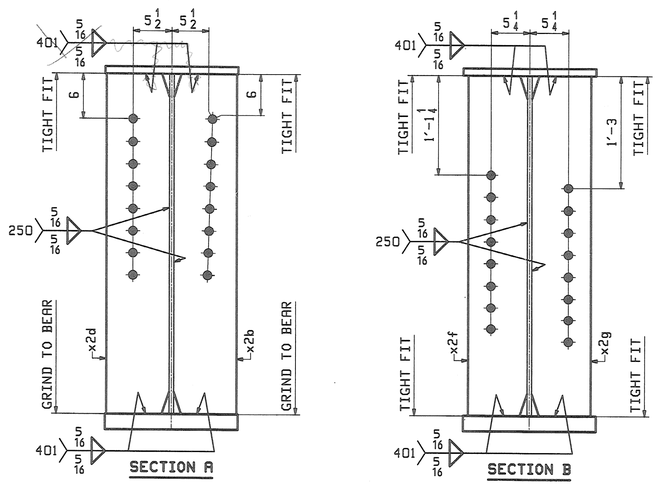

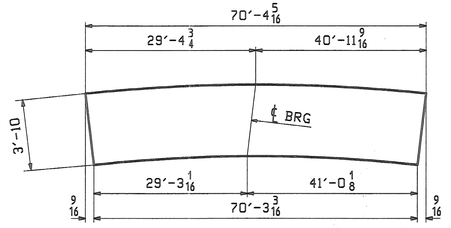

ORIENTATION DIAGRAM
FOR CAMBER SEE DWG C2

ABM INFO PAGE	ABM INFO LINE	SHIP MARK	QTY	MARK	MATERIAL	LENGTH FT	LENGTH INCHES	REMARKS	WT	PROCUREMENT NOTES
		7G2B	1		GIRDER				24826	
1	N		1	wa	PL 5/8×46	70	4 5/16	(A709-50WT2) (H2-3)		
1	E		1	ta	PL 2×18	70	4 5/16	(A709-50WT2) (H2-3)		
1	E		1	ba	PL 2×18	70	3 3/16	(A709-50WT2) (H2-3)		
2	N		1	x2b	PL 7/8×8 1/2	3	10	MIE		
2	N		1	x2d	PL 7/8×8 1/2	3	10	MIE		
2	P		4	x2f	PL 5/8×8	3	10			
2	P		4	x2g	PL 5/8×8	3	10			

BILL OF MATERIAL — JOB NO. 367 — DRAWING NO. 7 — REV.

REV.	DATE	REMARKS	DWN	CHK	APVL	SHOP
0					5-12-08	

MATERIAL:	SURFACE PREP. & PAINT:	HOLES:	SHOP BOLTS:
A709-50W (UN)	SEE DWG GN1	15/16"ø	NONE

DESCRIPTION: GIRDER - 7G2B

CASCO BAY STEEL STRUCTURES, INC.
75 SPRING HILL ROAD SACO, MAINE 04072
PHONE (207) 282-7360 FAX. (207) 282-1179
TENSOR 2775

STRUCTURE: TH24 over Hoosic River BRIDGE NO. 41 POWNAL, VERMONT COUNTY OF BENNINGTON	DRAWN: JTB	DATE: 04/25		
	CHKD: TM	DATE: 05/05		
LOCATION: TOWN OF POWNAL	JOB NO. 367	DWG NO. 7		
PROJ NO. BRZ 1441 (19) C/2				
CUSTOMER: VERMONT AGENCY OF TRANSPORTATION		REV. △		

RECEIVED
CK'D BY WDL CK'D BY CWG
MAY 15 2008
RESUBMIT ____ APPROVED AS NOTED
BY DATE

JTB Tue May 6 13:38:02 EDT 2008 /users/jtb/2775/2 : Rev0

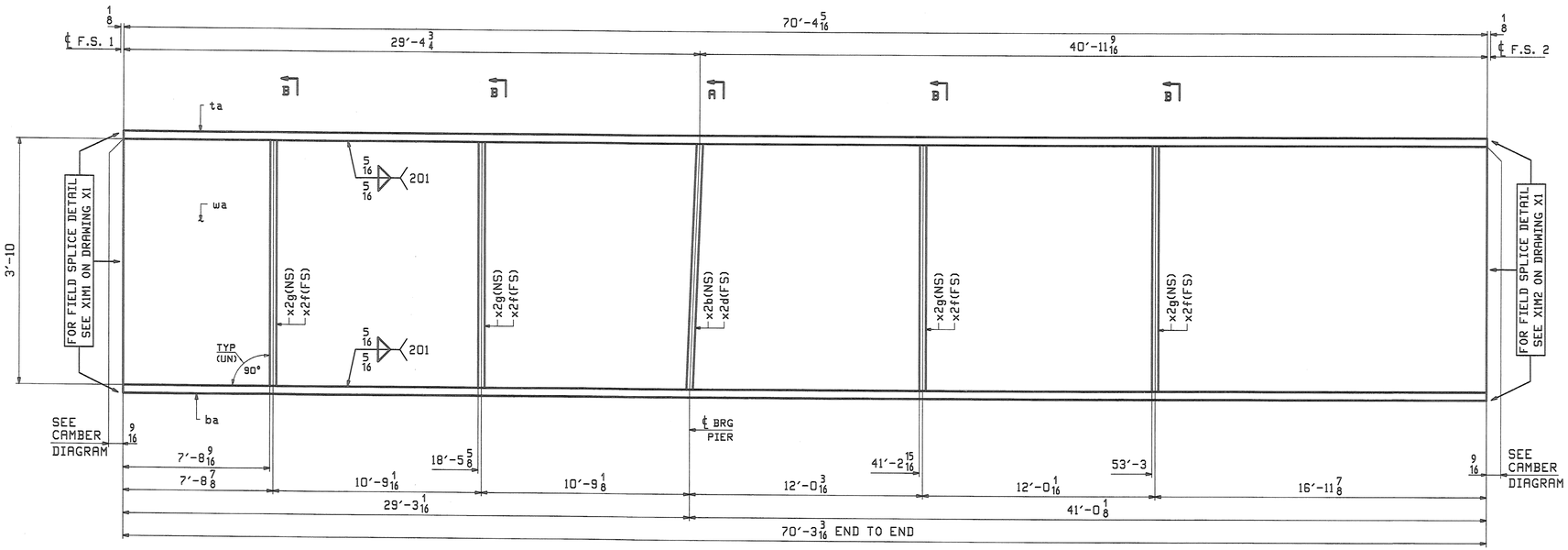

ONE - GIRDER - 8G3B

FOR GIRDER STANDARDS SEE DRAWINGS X1 & X2.
FOR CAMBER & FLANGE DIAGRAMS SEE DRAWING C2.
FOR GENERAL NOTES & WELD PROCEDURES SEE DRAWING GN1.
H2-3 DENOTES MATERIAL SUBJECT TO CHARPY V-NOTCH TESTING.

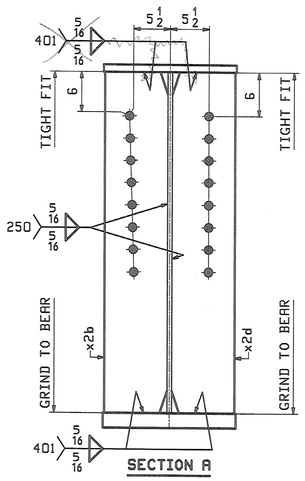

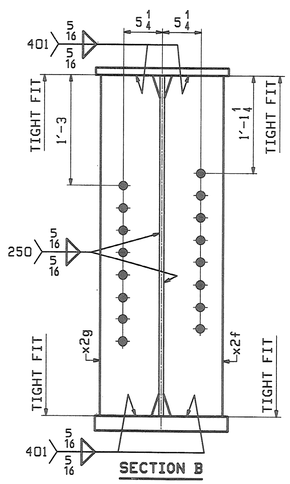

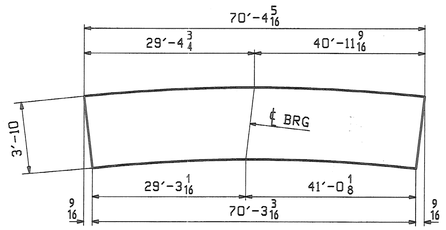

ORIENTATION DIAGRAM
FOR CAMBER SEE DWG C2

ABM INFO		SHIP	BILL OF MATERIAL					JOB NO.	DRAWING NO.		REV.
								367	8		
PAGE	LINE	MARK	QTY	MARK	MATERIAL	LENGTH FT	LENGTH INCHES	REMARKS	WT	PROCUREMENT NOTES	
		8G3B	1		GIRDER				24826		
1	N		1	wa	PL 5/8x46	70	4 5/16	(A709-50WT2) (H2-3)			
1	E		1	ta	PL 2x18	70	4 5/16	(A709-50WT2) (H2-3)			
1	E		1	ba	PL 2x18	70	3 3/16	(A709-50WT2) (H2-3)			
2	N		1	x2b	PL 7/8x8 1/2	3	10	MIE			
2	N		1	x2d	PL 7/8x8 1/2	3	10	MIE			
2	P		4	x2f	PL 5/8x8	3	10				
2	P		4	x2g	PL 5/8x8	3	10				

REV.	DATE	REMARKS	DWN	CHK	APVL	SHOP
0					5-12-08	

MATERIAL:	SURFACE PREP. & PAINT:	HOLES:	SHOP BOLTS:
A709-50W (UN)	SEE DWG GN1	15/16"ø	NONE

DESCRIPTION: GIRDER - 8G3B

CASCO BAY STEEL STRUCTURES, INC.
75 SPRING HILL ROAD SACO, MAINE 04072
PHONE (207) 282-7360 FAX. (207) 282-1179
TENSOR 2776

STRUCTURE: TH24 over Hoosic River BRIDGE NO. 41 POWNAL, VERMONT COUNTY OF BENNINGTON	DRAWN: JTB	DATE: 04/25
	CHKD: TM	DATE: 05/05
LOCATION: TOWN OF POWNAL	JOB NO.	DWG NO.
PROJ NO. BRZ 1441 (19) C/2	367	8
CUSTOMER: VERMONT AGENCY OF TRANSPORTATION		REV. △

RECEIVED
MAY 15 2008
BY DATE

JTB Tue May 6 13:08:03 EDT 2008 c:\users\jtb\2776\8 - Rev0

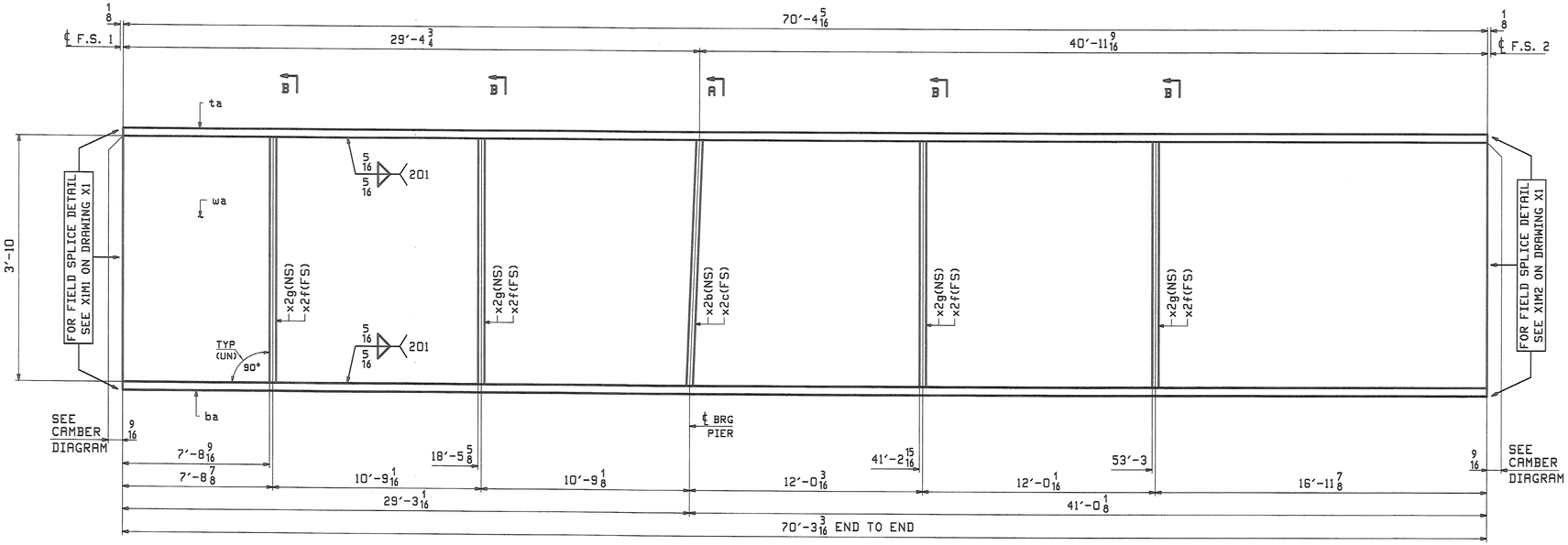

ONE - GIRDER - 9G4B

FOR GIRDER STANDARDS SEE DRAWINGS X1 & X2.
FOR CAMBER & FLANGE DIAGRAMS SEE DRAWING C2.
FOR GENERAL NOTES & WELD PROCEDURES SEE DRAWING GN1.
H2-3 DENOTES MATERIAL SUBJECT TO CHARPY V-NOTCH TESTING.

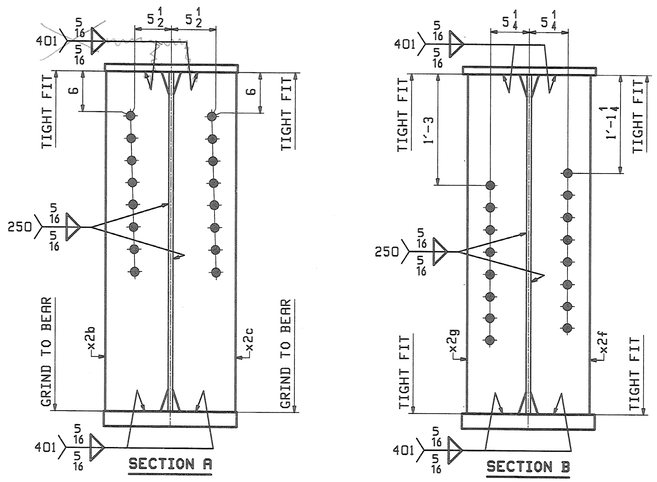

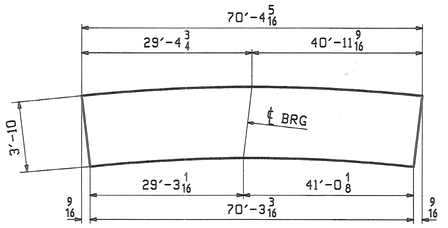

ORIENTATION DIAGRAM
FOR CAMBER SEE DWG C2

ABM INFO		SHIP	BILL OF MATERIAL						JOB NO.	DRAWING NO.	REV.
									367	9	
PAGE	LINE	MARK	QTY	MARK	MATERIAL	LENGTH FT	LENGTH INCHES	REMARKS	WT	PROCUREMENT NOTES	
		9G4B	1		GIRDER				24826		
1	N		1	wa	PL 5/8x46	70	4 5/16	(A709-50WT2) (H2-3)			
1	E		1	ta	PL 2x18	70	4 5/16	(A709-50WT2) (H2-3)			
1	E		1	ba	PL 2x18	70	3 3/16	(A709-50WT2) (H2-3)			
2	N		1	x2b	PL 7/8x8 1/2	3	10	MIF			
2	N		1	x2c	PL 7/8x8 1/2	3	10	MIF			
2	P		4	x2f	PL 5/8x8	3	10				
2	P		4	x2g	PL 5/8x8	3	10				

REV.	DATE	REMARKS	DWN	CHK	APVL	SHOP
0					5-12-08	

MATERIAL:	SURFACE PREP. & PAINT:	HOLES:	SHOP BOLTS:
A709-50W (UN)	SEE DWG GN1	15/16"ø	NONE

DESCRIPTION: GIRDER - 9G4B

CASCO BAY STEEL STRUCTURES, INC.
75 SPRING HILL ROAD SACO, MAINE 04072
PHONE (207) 282-7360 FAX. (207) 282-1179
TENSOR 2776

STRUCTURE:	TH24 over Hoosic River BRIDGE NO. 41 POWNAL, VERMONT COUNTY OF BENNINGTON	DRAWN: JTB	DATE: 04/25
		CHKD: TM	DATE: 05/05
LOCATION:	TOWN OF POWNAL	JOB NO.	DWG NO.
PROJ NO.	BRZ 1441 (19) C/2	367	9
CUSTOMER:	VERMONT AGENCY OF TRANSPORTATION		REV. △

RECEIVED
CK'D BY WBL OK'D BY CWS
MAY 15 2008
RESUBMIT ____ APPROVED AS NOTED
BY DATE

JTB Tue May 6 13:08:04 EDT 2008 /users/jtb/2776/9-1.dwg 0

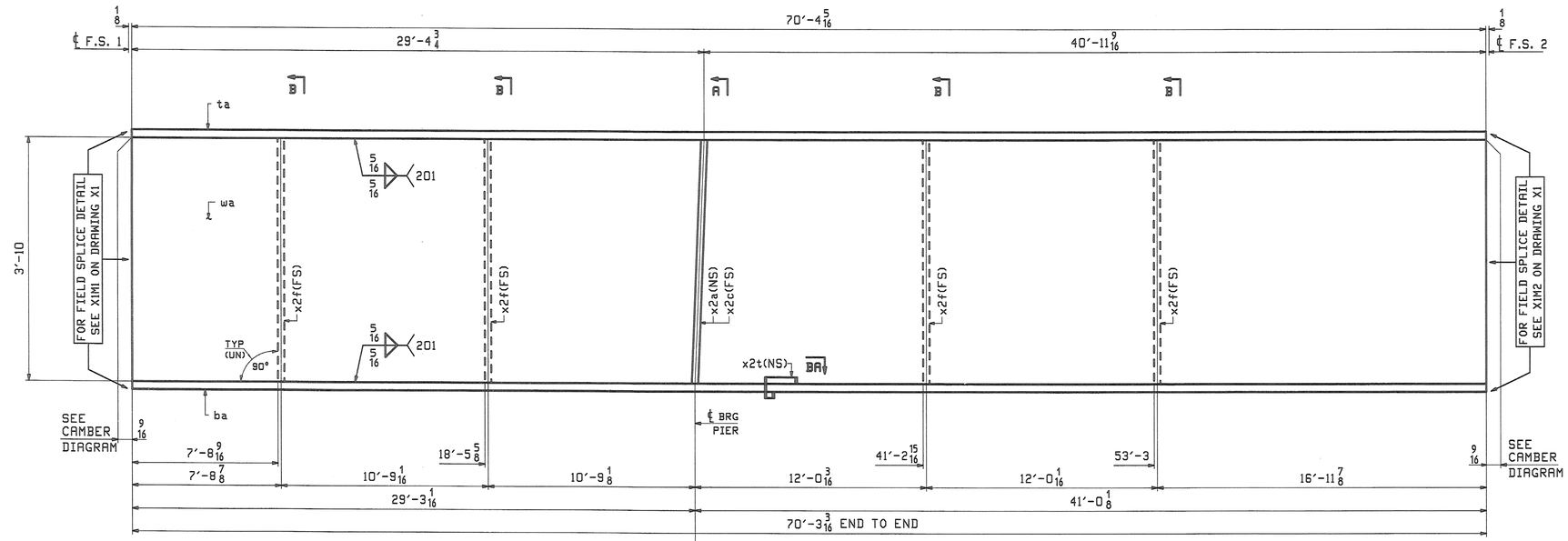

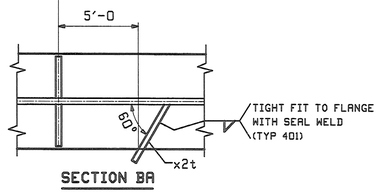

SECTION BA

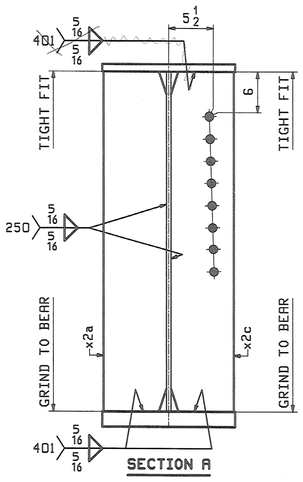

SECTION A

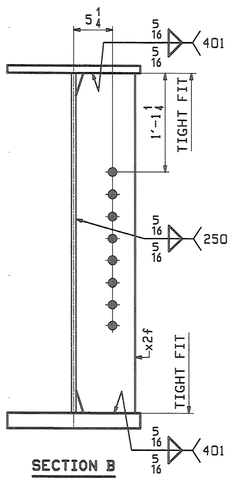

SECTION B

ONE - GIRDER - 10G5B

FOR GIRDER STANDARDS SEE DRAWINGS X1 & X2.
FOR CAMBER & FLANGE DIAGRAMS SEE DRAWING C2.
FOR GENERAL NOTES & WELD PROCEDURES SEE DRAWING GN1.
H2-3 DENOTES MATERIAL SUBJECT TO CHARPY V-NOTCH TESTING.

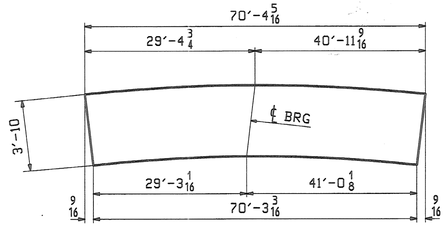

ORIENTATION DIAGRAM
FOR CAMBER SEE DWG C2

ABM INFO PAGE	ABM INFO LINE	SHIP MARK	QTY	MARK	MATERIAL	LENGTH FT	LENGTH INCHES	REMARKS	WT	PROCUREMENT NOTES
		10G5B	1		GIRDER				24566	
1	N		1	wa	PL 5/8x46	70	4 5/16	(A709-50WT2) (H2-3)		
1	E		1	ta	PL 2x18	70	4 5/16	(A709-50WT2) (H2-3)		
1	E		1	ba	PL 2x18	70	3 7/16	(A709-50WT2) (H2-3)		
2	N		1	x2a	PL 7/8x8 1/2	3	10	M1E		
2	N		1	x2c	PL 7/8x8 1/2	3	10	M1E		
2	P		4	x2f	PL 5/8x8	3	10			
2	Q		1	x2t	PL 1/4x4	1	0 3/16			

BILL OF MATERIAL

JOB NO. 367 | DRAWING NO. 10 | REV.

REV.	DATE	REMARKS	DWN	CHK	APVL	SHOP
0					5-12-08	

MATERIAL:	SURFACE PREP. & PAINT:	HOLES:	SHOP BOLTS:
A709-50W (UN)	SEE DWG GN1	15/16"ø	NONE

DESCRIPTION: GIRDER - 10G5B

CASCO BAY STEEL STRUCTURES, INC.
75 SPRING HILL ROAD SACO, MAINE 04072
PHONE (207) 282-7360 FAX. (207) 282-1179
TENSOR 2776

STRUCTURE: TH24 over Hoosic River
BRIDGE NO. 41
POWNAL, VERMONT
COUNTY OF BENNINGTON

DRAWN: JTB DATE: 04/25
CHKD: TM DATE: 05/05

LOCATION: TOWN OF POWNAL
PROJ NO. BRZ 1441 (19) C/2
CUSTOMER: VERMONT AGENCY OF TRANSPORTATION

JOB NO. 367
DWG NO. 10
REV. △

RECEIVED
OK'D BY WDL OK'D BY Rene
MAY 15 2008
RESUBMIT ____ APPROVED AS NOTED
BY DATE

JTB Tue May 6 13:38:05 EDT 2008 /users/jobs/2776/10_1.dwg

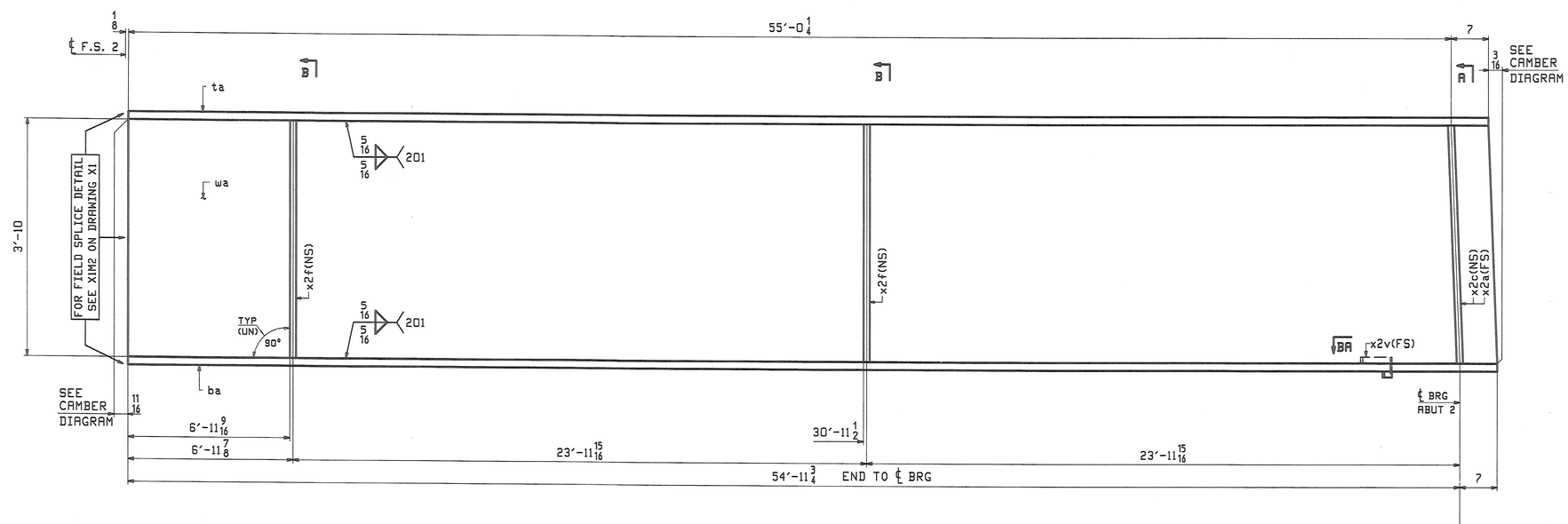

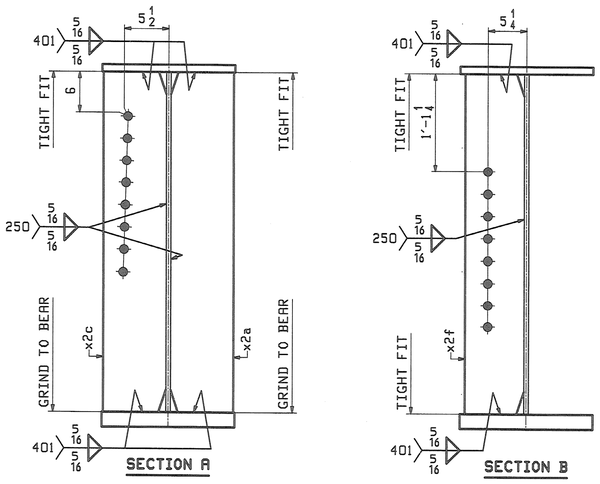

ONE - GIRDER - 11G1C

FOR GIRDER STANDARDS SEE DRAWINGS X1 & X2.
FOR CAMBER & FLANGE DIAGRAMS SEE DRAWING C2.
FOR GENERAL NOTES & WELD PROCEDURES SEE DRAWING GN1.
H2-3 DENOTES MATERIAL SUBJECT TO CHARPY V-NOTCH TESTING.

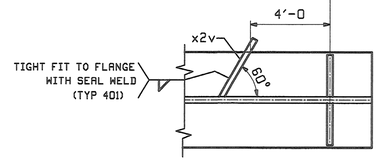

SECTION BA

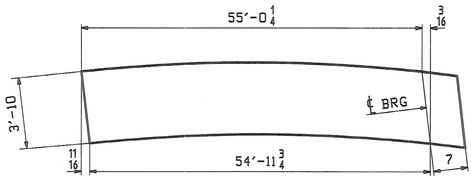

ORIENTATION DIAGRAM
FOR CAMBER SEE DWG C2

ABM INFO		SHIP	BILL OF MATERIAL					JOB NO.	DRAWING NO.	REV.
								367	11	
PAGE	LINE	MARK	QTY	MARK	MATERIAL	LENGTH FT	LENGTH INCHES	REMARKS	WT	PROCUREMENT NOTES
		11G1C	1		GIRDER				12577	
1	Q		1	wa	PL 5/8x46	55	7 7/16	(A709-50WT2) (H2-3)		
1	G		1	ta	PL 1x18	55	7 1/4	(A709-50WT2) (H2-3)		
1	G		1	ba	PL 1x18	55	6 3/4	(A709-50WT2) (H2-3)		
2	N		1	x2a	PL 7/8x8 1/2	3	10	M1F		
2	N		1	x2c	PL 7/8x8 1/2	3	10	M1F		
2	P		2	x2f	PL 5/8x8	3	10			
2	R		1	x2v	PL 1/4x3	1	0 3/16			

REV.	DATE	REMARKS	DWN	CHK	APVL	SHOP
0					5-12-08	

MATERIAL:	SURFACE PREP. & PAINT:	HOLES:	SHOP BOLTS:
A709-50W (UN)	SEE DWG GN1	15/16"Ø	NONE

DESCRIPTION: GIRDER - 11G1C

CASCO BAY STEEL STRUCTURES, INC.
75 SPRING HILL ROAD SACO, MAINE 04072
PHONE (207) 282-7360 FAX. (207) 282-1179
TENSOR 2276

STRUCTURE:	DRAWN:	DATE:
TH24 over Hoosic River BRIDGE NO. 41 POWNAL, VERMONT COUNTY OF BENNINGTON	JTB	04/25
	CHKD: TM	DATE: 05/05
LOCATION: TOWN OF POWNAL	JOB NO.	DWG NO.
PROJ NO. BRZ 1441 (19) C/2	367	11
CUSTOMER: VERMONT AGENCY OF TRANSPORTATION		REV. △

RECEIVED
CK'D BY AJDL CK'D BY CWC
MAY 1 5 2008
RESUBMIT APPROVED ✓
BY DATE

JTB Tue May 6 13:44:29 EDT 2008 /users/jobs/2776/11.dwg

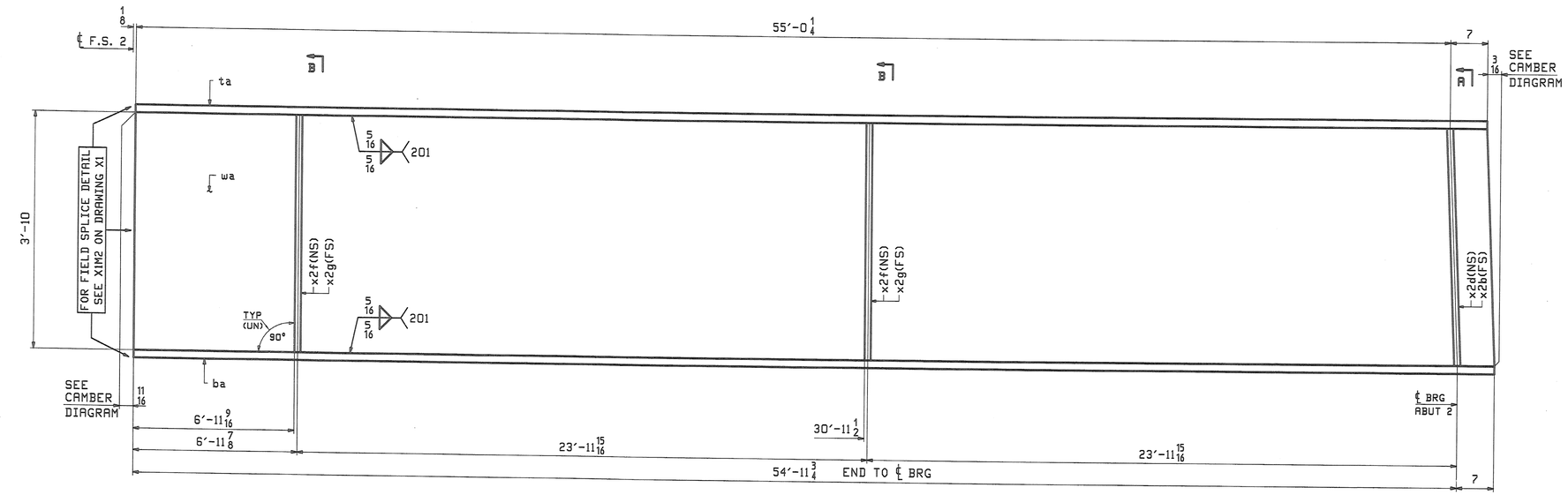

ONE - GIRDER - 12G2C

FOR GIRDER STANDARDS SEE DRAWINGS X1 & X2.
FOR CAMBER & FLANGE DIAGRAMS SEE DRAWING C2.
FOR GENERAL NOTES & WELD PROCEDURES SEE DRAWING GN1.
H2-3 DENOTES MATERIAL SUBJECT TO CHARPY V-NOTCH TESTING.

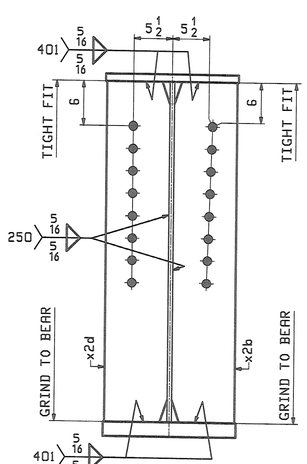

SECTION A

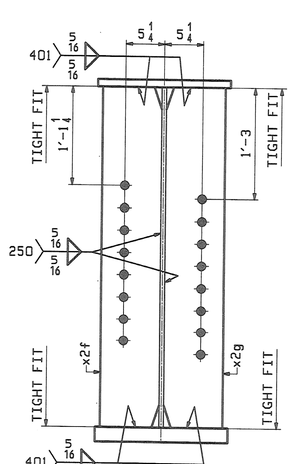

SECTION B

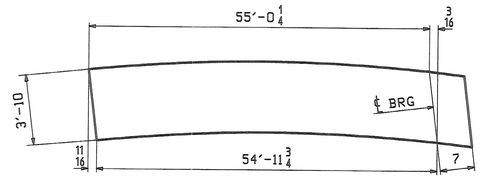

ORIENTATION DIAGRAM
FOR CAMBER SEE DWG C2

ABM INFO		SHIP	BILL OF MATERIAL					JOB NO. 367	DRAWING NO. 12	REV.
PAGE	LINE	MARK	QTY	MARK	MATERIAL	LENGTH FT	LENGTH INCHES	REMARKS	WT	PROCUREMENT NOTES
		12G2C	1		GIRDER				12705	
1	Q		1	wa	PL 5/8x46	55	7 7/16	(A709-50WT2) (H2-3)		
1	G		1	ta	PL 1x18	55	7 1/4	(A709-50WT2) (H2-3)		
1	G		1	ba	PL 1x18	55	6 3/4	(A709-50WT2) (H2-3)		
2	N		1	x2b	PL 7/8x8 1/2	3	10	M1E		
2	N		1	x2d	PL 7/8x8 1/2	3	10	M1E		
2	P		2	x2f	PL 5/8x8	3	10			
2	P		2	x2g	PL 5/8x8	3	10			

REV.	DATE	REMARKS	DWN	CHK	APVL	SHOP
0					5-12-08	

MATERIAL:	SURFACE PREP. & PAINT:	HOLES:	SHOP BOLTS:
A709-50W (UN)	SEE DWG GN1	15/16"ø	NONE

DESCRIPTION: GIRDER - 12G2C

CASCO BAY STEEL STRUCTURES, INC.
75 SPRING HILL ROAD SACO, MAINE 04072
PHONE (207) 282-7360 FAX. (207) 282-1179
TENSOR 2776

STRUCTURE: TH24 over Hoosic River
BRIDGE NO. 41
POWNAL, VERMONT
COUNTY OF BENNINGTON

DRAWN:	DATE:
JTB	04/25
CHKD: TM	DATE: 05/05

		JOB NO.	DWG NO.
LOCATION:	TOWN OF POWNAL		
PROJ NO.	BRZ 1441 (19) C/2	367	12
CUSTOMER:	VERMONT AGENCY OF TRANSPORTATION		REV. △

RECEIVED
CK'D BY WDL CK'D BY CWC
MAY 1 5 2008
RESUBMIT APPROVED ✓
BY DATE

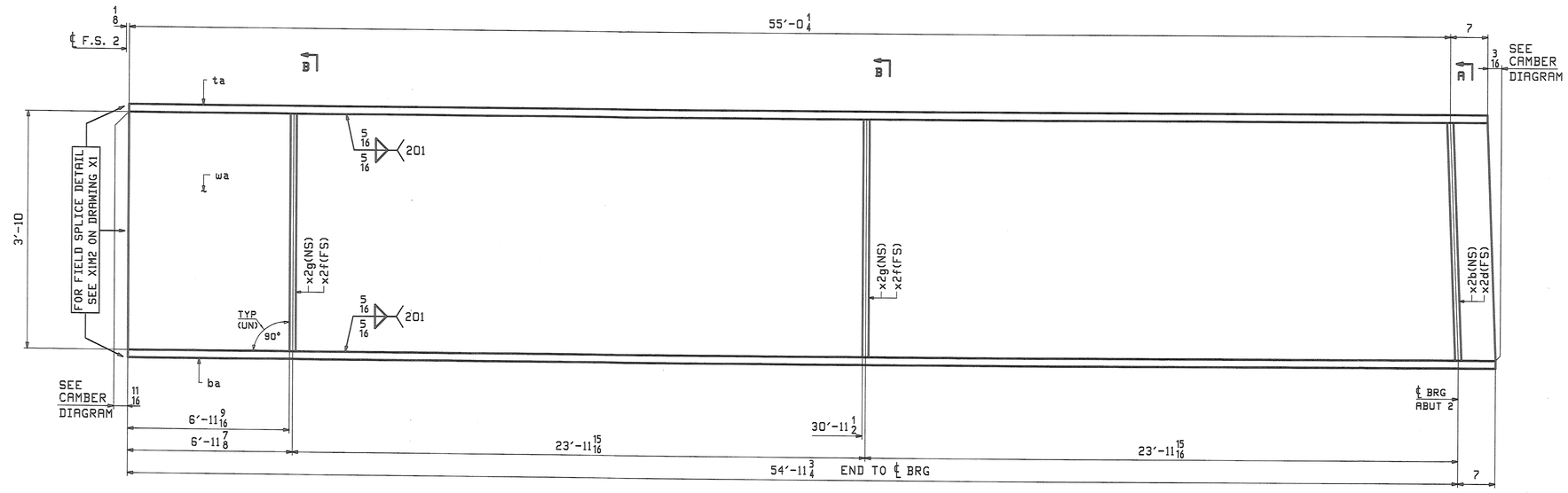

ONE - GIRDER - 13G3C

FOR GIRDER STANDARDS SEE DRAWINGS X1 & X2.
FOR CAMBER & FLANGE DIAGRAMS SEE DRAWING C2.
FOR GENERAL NOTES & WELD PROCEDURES SEE DRAWING GN1.
H2-3 DENOTES MATERIAL SUBJECT TO CHARPY V-NOTCH TESTING.

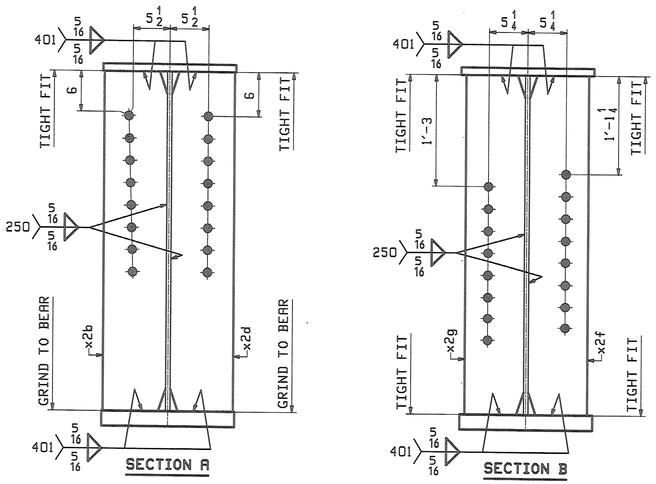

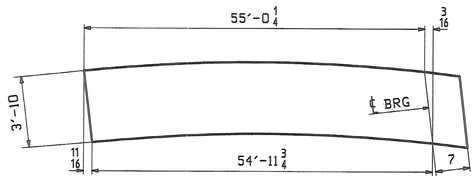

ORIENTATION DIAGRAM
FOR CAMBER SEE DWG C2

ABM INFO		SHIP	BILL OF MATERIAL					JOB NO.	DRAWING NO.	REV.
								367	13	
PAGE	LINE	MARK	QTY	MARK	MATERIAL	LENGTH FT	LENGTH INCHES	REMARKS	WT	PROCUREMENT NOTES
		13G3C	1		GIRDER				12705	
1	Q		1	wa	PL 5/8x46	55	7 7/16	(A709-50WT2) (H2-3)		
1	G		1	ta	PL 1x18	55	7 1/4	(A709-50WT2) (H2-3)		
1	G		1	ba	PL 1x18	55	6 3/4	(A709-50WT2) (H2-3)		
2	N		1	x2b	PL 7/8x8 1/2	3	10	MIE		
2	N		1	x2d	PL 7/8x8 1/2	3	10	MIE		
2	P		2	x2f	PL 5/8x8	3	10			
2	P		2	x2g	PL 5/8x8	3	10			

REV.	DATE	REMARKS	DWN	CHK	APVL	SHOP
0					5-12-08	

MATERIAL:	SURFACE PREP. & PAINT:	HOLES:	SHOP BOLTS:
A709-50W (UN)	SEE DWG GN1	15 15/16"Ø	NONE

DESCRIPTION: GIRDER - 13G3C

CASCO BAY STEEL STRUCTURES, INC.
75 SPRING HILL ROAD SACO, MAINE 04072
PHONE (207) 282-7360 FAX. (207) 282-1179
TENSOR 2776

STRUCTURE:	DRAWN:	DATE:
TH24 over Hoosic River BRIDGE NO. 41 POWNAL, VERMONT COUNTY OF BENNINGTON	JTB	04/25
	CHKD: TM	DATE: 05/05
LOCATION: TOWN OF POWNAL	JOB NO.	DWG NO.
PROJ NO. BRZ 1441 (19) C/2	367	13
CUSTOMER: VERMONT AGENCY OF TRANSPORTATION		REV. △

RECEIVED
CK'D BY WDL CK'D BY CWC
MAY 15 2008
RESUBMIT APPROVED ✓
BY DATE

JTB Tue May 6 13:38:08 EDT 2008 /users/jobs/2776/13.dwg

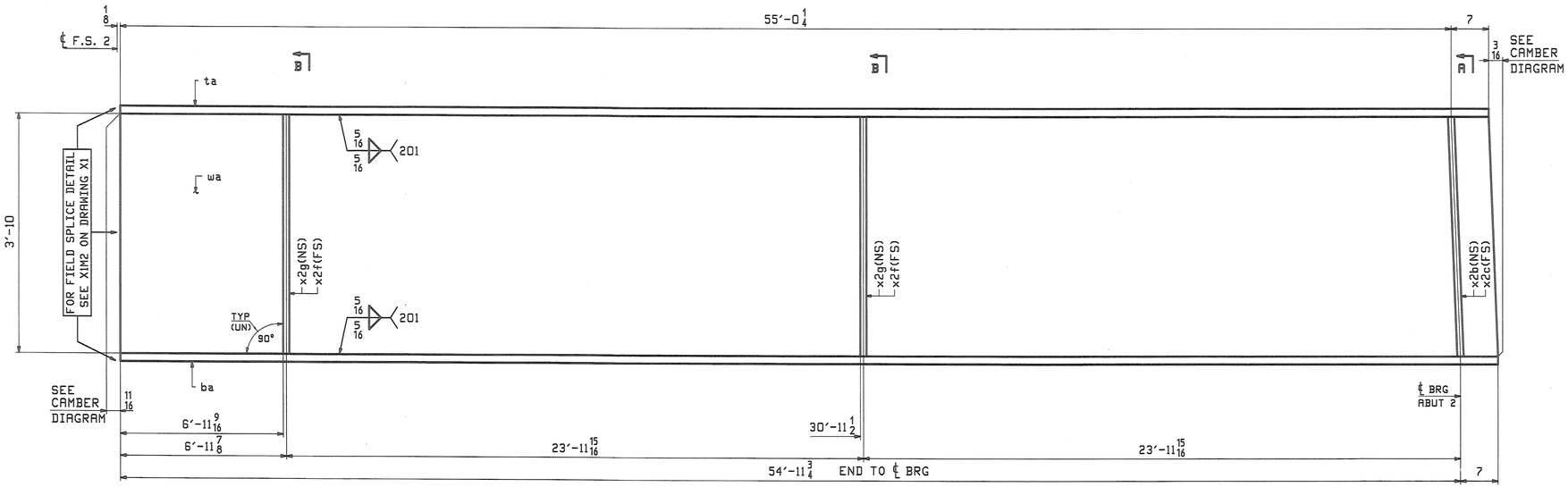

ONE - GIRDER - 14G4C

FOR GIRDER STANDARDS SEE DRAWINGS X1 & X2.
FOR CAMBER & FLANGE DIAGRAMS SEE DRAWING C2.
FOR GENERAL NOTES & WELD PROCEDURES SEE DRAWING GN1.
H2-3 DENOTES MATERIAL SUBJECT TO CHARPY V-NOTCH TESTING.

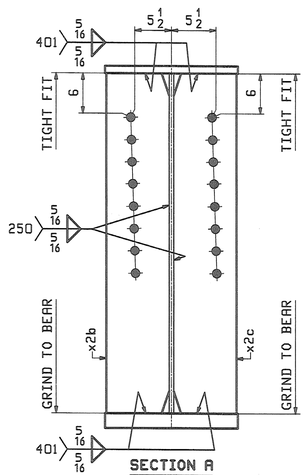

SECTION A

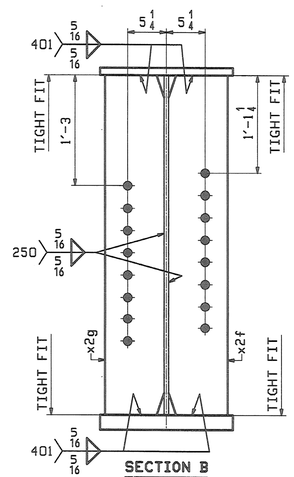

SECTION B

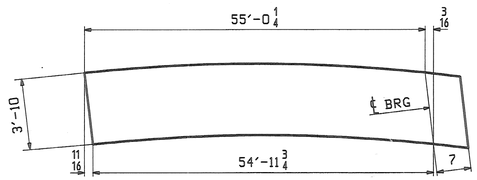

ORIENTATION DIAGRAM
FOR CAMBER SEE DWG C2

ABM INFO		SHIP	BILL OF MATERIAL					JOB NO. 367	DRAWING NO. 14	REV.
PAGE	LINE	MARK	QTY	MARK	MATERIAL	LENGTH FT	LENGTH INCHES	REMARKS	WT	PROCUREMENT NOTES
		14G4C	1		GIRDER				12705	
1	Q		1	wa	PL 5/8x46	55	7 7/16	(A709-50WT2) (H2-3)		
1	G		1	ta	PL 1x18	55	7 1/4	(A709-50WT2) (H2-3)		
1	G		1	ba	PL 1x18	55	6 3/4	(A709-50WT2) (H2-3)		
2	N		1	x2b	PL 7/8x8 1/2	3	10	M1E		
2	N		1	x2c	PL 7/8x8 1/2	3	10	M1E		
2	P		2	x2f	PL 5/8x8	3	10			
2	P		2	x2g	PL 5/8x8	3	10			

REV.	DATE	REMARKS	DWN	CHK	APVL	SHOP
0					5-12-08	

MATERIAL:	SURFACE PREP. & PAINT:	HOLES:	SHOP BOLTS:
A709-50W (UN)	SEE DWG GN1	15/16"ø	NONE

DESCRIPTION: GIRDER - 14G4C

CASCO BAY STEEL STRUCTURES, INC.
75 SPRING HILL ROAD SACO, MAINE 04072
PHONE (207) 282-7360 FAX. (207) 282-1179
TENSOR 2776

STRUCTURE: TH24 over Hoosic River
BRIDGE NO. 41
POWNAL, VERMONT
COUNTY OF BENNINGTON

DRAWN: JTB DATE: 04/25
CHKD: TM DATE: 05/05

LOCATION: TOWN OF POWNAL
PROJ NO. BRZ 1441 (19) C/2
CUSTOMER: VERMONT AGENCY OF TRANSPORTATION

JOB NO. 367
DWG NO. 14
REV. △

RECEIVED
CK'D BY WAL CK'D BY CWC
MAY 15 2008
RESUBMIT APPROVED
BY DATE

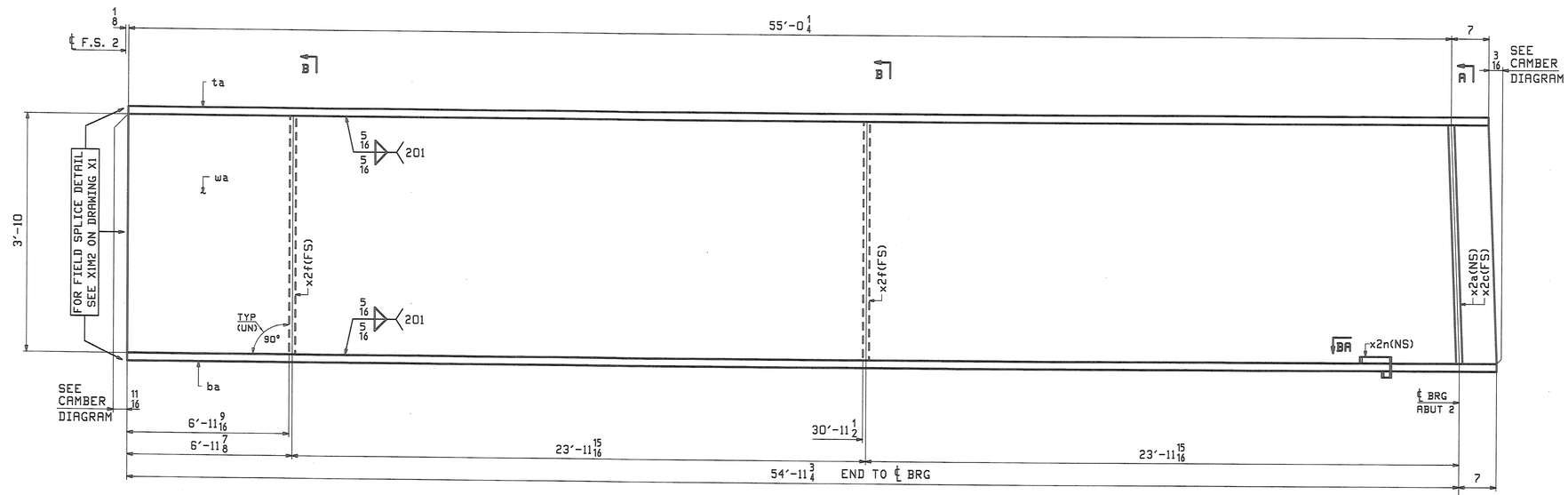

ONE - GIRDER - 15G5C

FOR GIRDER STANDARDS SEE DRAWINGS X1 & X2.
FOR CAMBER & FLANGE DIAGRAMS SEE DRAWING C2.
FOR GENERAL NOTES & WELD PROCEDURES SEE DRAWING GN1.
H2-3 DENOTES MATERIAL SUBJECT TO CHARPY V-NOTCH TESTING.

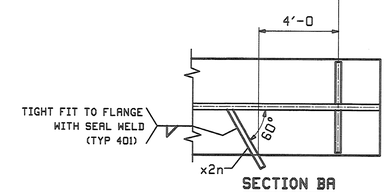

SECTION BA

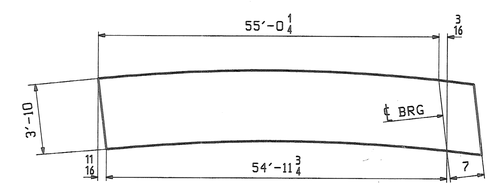

ORIENTATION DIAGRAM
FOR CAMBER SEE DWG C2

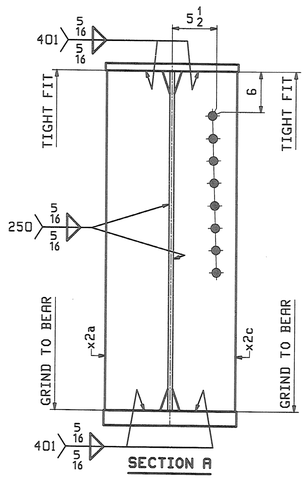

SECTION A

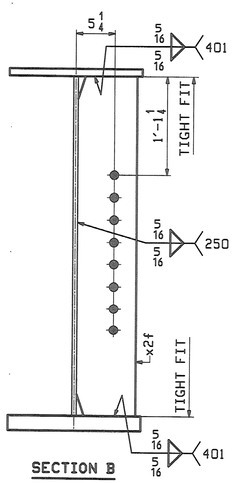

SECTION B

ABM INFO		SHIP	BILL OF MATERIAL					JOB NO. 367	DRAWING NO. 15	REV.
PAGE	LINE	MARK	QTY	MARK	MATERIAL	LENGTH FT	LENGTH INCHES	REMARKS	WT	PROCUREMENT NOTES
		15G5C	1		GIRDER				12577	
1	Q		1	wa	PL 5/8x46	55	7 7/16	(A709-50WT2) (H2-3)		
1	G		1	ta	PL 1x18	55	7 1/4	(A709-50WT2) (H2-3)		
1	G		1	ba	PL 1x18	55	6 3/4	(A709-50WT2) (H2-3)		
2	N		1	x2a	PL 7/8x8 1/2	3	10	M1E		
2	N		1	x2c	PL 7/8x8 1/2	3	10	M1E		
2	P		2	x2f	PL 5/8x8	3	10			
2	R		1	x2n	PL 1/4x3	1	0 3/16			

REV.	DATE	REMARKS	DWN	CHK	APVL	SHOP
0					5-12-08	

MATERIAL:	SURFACE PREP. & PAINT:	HOLES:	SHOP BOLTS:
A709-50W (UN)	SEE DWG GN1	15/16"Ø	NONE

DESCRIPTION: GIRDER - 15G5C

CASCO BAY STEEL STRUCTURES, INC.
75 SPRING HILL ROAD SACO, MAINE 04072
PHONE (207) 282-7360 FAX. (207) 282-1179
TENSOR 2776

STRUCTURE:	TH24 over Hoosic River BRIDGE NO. 41 POWNAL, VERMONT COUNTY OF BENNINGTON	DRAWN: JTB	DATE: 04/25
		CHKD: TM	DATE: 05/05
LOCATION:	TOWN OF POWNAL	JOB NO.	DWG NO.
PROJ NO.	BRZ 1441 (19) C/2	367	15
CUSTOMER:	VERMONT AGENCY OF TRANSPORTATION		REV. △

RECEIVED
CK'D BY WDL CK'D BY CWC
MAY 15 2008
RESUBMIT ____ APPROVED ✓
BY DATE

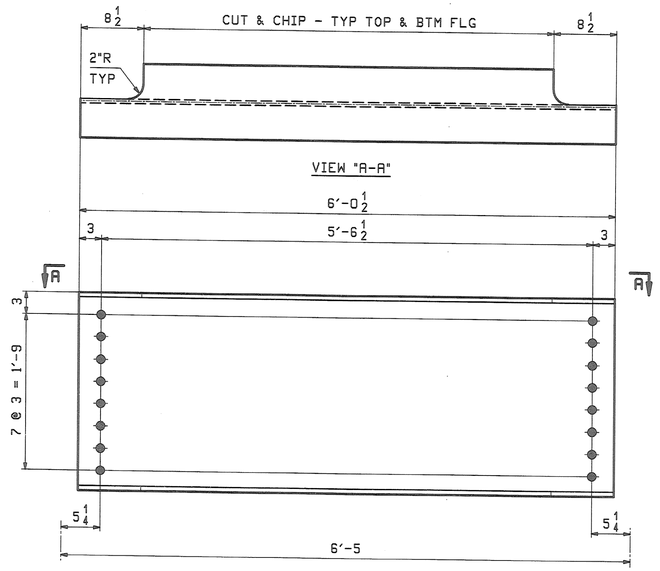

40 ~ INT. DIAPHRAGMS - 16D1

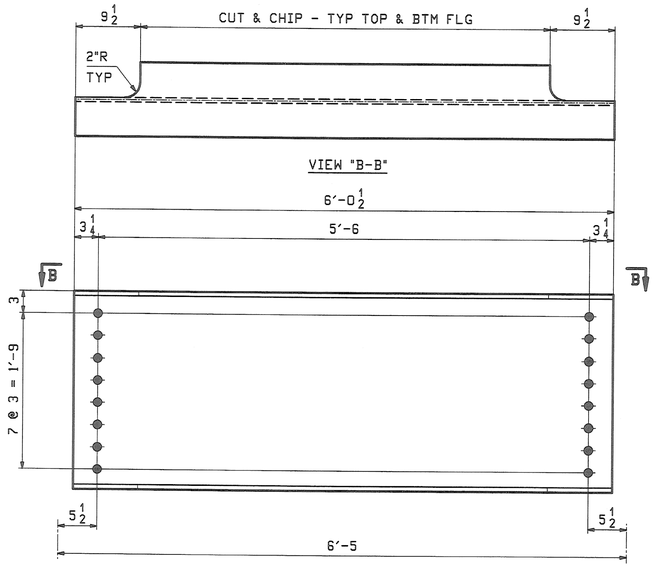

8 ~ BRG DIAPHRAGMS - 16D2

4 ~ BRG DIAPHRAGMS - 16D3P (PAINTED - SEE DWG GN1)

ABM INFO		SHIP	BILL OF MATERIAL					JOB NO.	DRAWING NO.	REV.
								367	16	
PAGE	LINE	MARK	QTY	MARK	MATERIAL	LENGTH FT	LENGTH INCHES	REMARKS	WT	PROCUREMENT NOTES
					DIAPHRAGMS					
2	U	16D1	40		W 27x84	6	0 1/2		508	
2	U	16D2	8		W 27x84	6	0 1/2		508	
2	U	16D3P	4		W 27x84	6	0 1/2	PAINTED	508	

NOTE:
FOR GENERAL NOTES SEE DRAWING GN1.

RECEIVED
CK'D BY MDL 5/14/08 OK'D BY CWC
MAY 15 2008
RESUBMIT ____ APPROVED ✓
BY DATE

REV.	DATE	REMARKS	DWN	CHK	APVL	SHOP
0					5-12-08	

MATERIAL:	SURFACE PREP. & PAINT:	HOLES:	SHOP BOLTS:
A709-50W	AS NOTED ON GN1	15/16Ø	NONE

DESCRIPTION: DIAPHRAGMS

CASCO BAY STEEL STRUCTURES, INC.
75 SPRING HILL ROAD SACO, MAINE 04072
PHONE (207) 282-7360 FAX. (207) 282-1179
TENSOR 2776

STRUCTURE:	TH24 over Hoosic River BRIDGE NO. 41 POWNAL, VERMONT COUNTY OF BENNINGTON	DRAWN: JTB	DATE: 04/25
		CHK'D: TM	DATE: 05/05
LOCATION:	TOWN OF POWNAL	JOB NO.	DWG NO.
PROJ NO.	BRZ 1441 (19) C/2	367	16
CUSTOMER:	VERMONT AGENCY OF TRANSPORTATION		REV. △

JTB Tue May 6 103812 EDT 2008 /users/jobs/2776/16 : Rev0

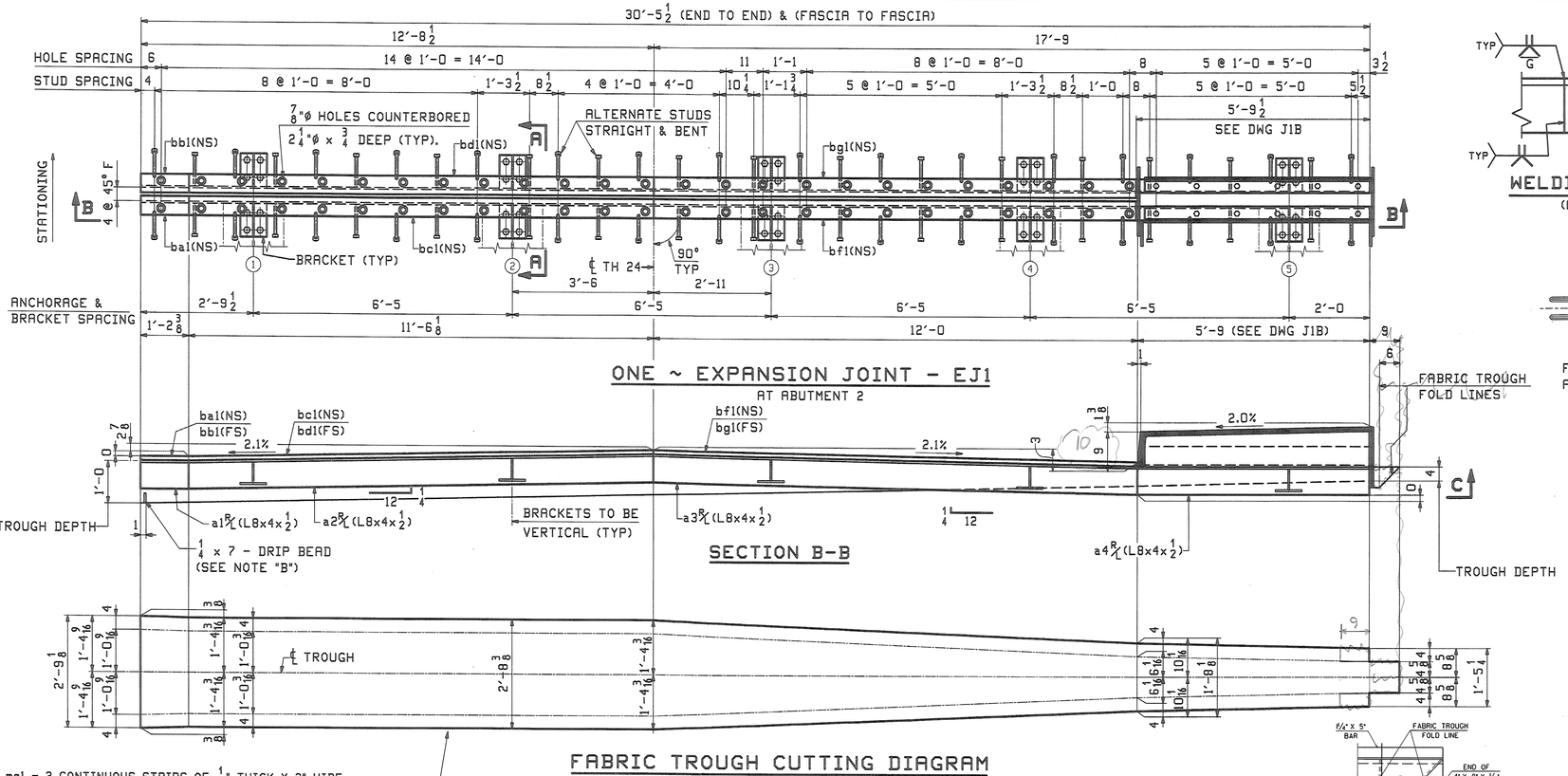

* THESE DIMENSIONS ARE THEORETICAL AND MAY CHANGE DEPENDING UPON BEAM PROFILES.

NOTE "A"
FILL COUNTERBORED HOLES WITH HOT POURED JOINT SEALER (STANDARD SPECIFICATION 707.04 AS MODIFIED BY THE GENERAL SPECIAL PROVISIONS) AFTER BOLT INSTALLATION. PAYMENT FOR THE WORK SHALL BE INCIDENTAL TO ITEM 516.11.

WORK THIS DWG WITH DWG J1B

GALVANIZE ALL STEEL AFTER FABRICATION (EXCEPT AS NOTED)

REV.	DATE	REMARKS	DWN	CHK	APVL	SHOP
0					5-12-08	

MATERIAL:	SURFACE PREP. & PAINT:	HOLES:	SHOP BOLTS:
A709-36		13/16"Ø (UN)	AS NOTED

DESCRIPTION: EXPANSION JOINT (ABUT 2)

CASCO BAY STEEL STRUCTURES, INC.
75 SPRING HILL ROAD SACO, MAINE 04072
PHONE (207) 282-7360 FAX. (207) 282-1179
TENSOR 2776

STRUCTURE:	DRAWN:	DATE:
TH24 over Hoosic River BRIDGE NO. 41 POWNAL, VERMONT COUNTY OF BENNINGTON	JTB	04/27
	CHKD: TM	DATE: 05/07
LOCATION: TOWN OF POWNAL	JOB NO. 367	DWG NO. J1AB
PROJ NO. BRZ 1441 (19) C/2		REV. △
CUSTOMER: VERMONT AGENCY OF TRANSPORTATION		

RECEIVED
CK'D BY UVA CK'D BY CWC
MAY 15 2008
RESUBMIT APPROVED AS NOTED
BY DATE

Fri, May 9, 2008 07:26:07 PM //users/jbs/2776/J1BA1.dgn

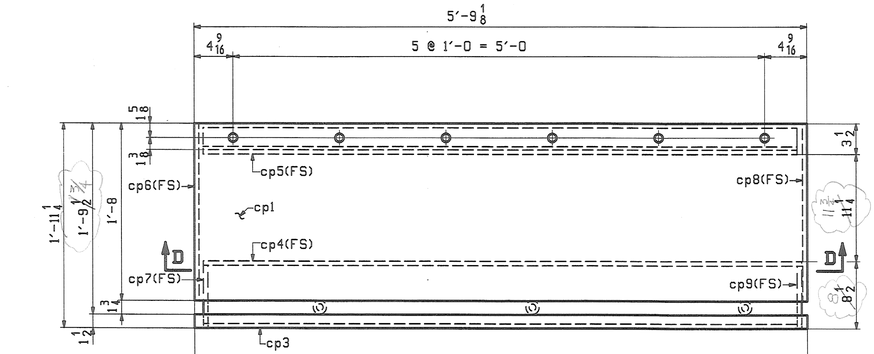

UPPER ASSEMBLY

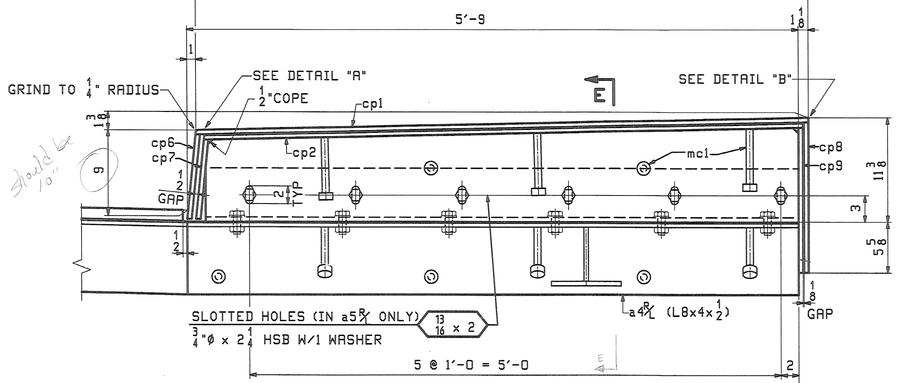

SECTION D-D

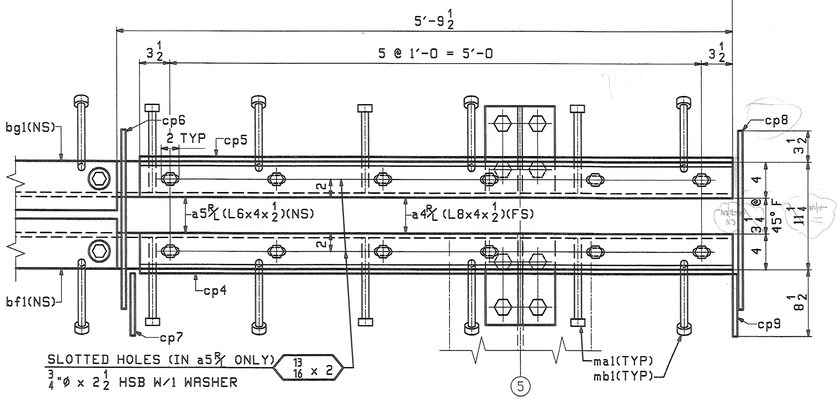

LOWER ASSEMBLY

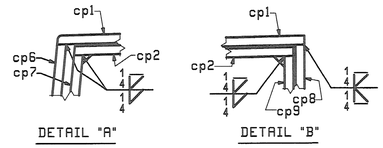

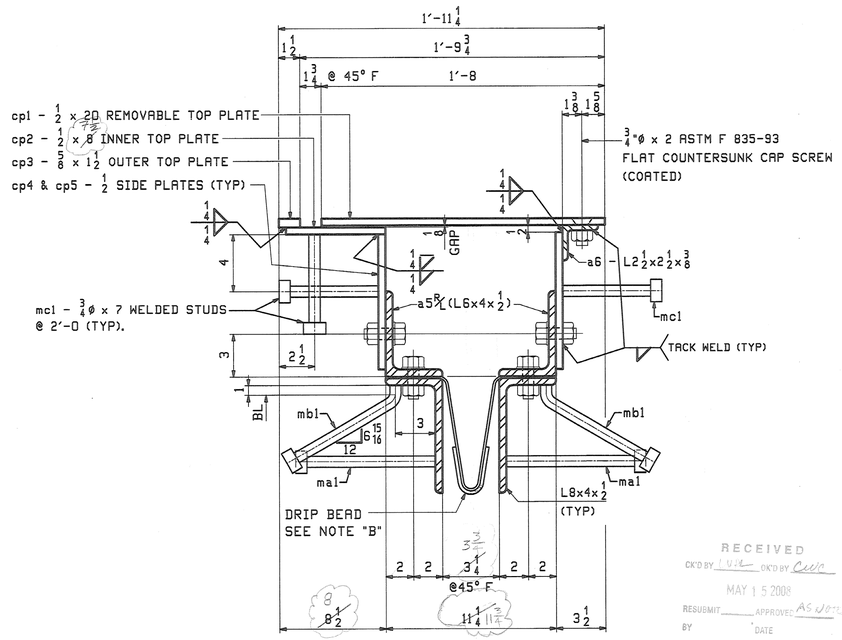

SECTION E

NOTE "B"
A DRIP BEAD OF 1/4 x 7 STRIP OF PREFORMED MATERIAL SHALL BE CEMENTED TO THE BOTTOM OF THE FABRIC TROUGH USING AN ADHESIVE APPROVED BY THE MANUFACTURER. THE DRIP BEAD SHALL BE APPLIED 1" FROM THE DOWNSPOUT END OF THE TROUGH.

RECEIVED
CK'D BY LVK OK'D BY CWM
MAY 15 2008
RESUBMIT ____ APPROVED AS NOTED
BY ____ DATE

ABM INFO PAGE	ABM INFO LINE	SHIP MARK	BILL OF MATERIAL QTY	MARK	MATERIAL	LENGTH FT	LENGTH INCHES	REMARKS	WT	PROCUREMENT NOTES
		AP1	5		ANCHORAGE				13	
4	V		5	pf1	PL 1/2x8	0	9			
5	C		20	ma1	3/4 Ø STUD	0	10	(A108) STUDS		
		TS1	20		THREADED ROD				4	
5	U		20		1 Ø ROD	0	6	THREAD FULL LENGTH		
5	V		40	w1	PL 3/8x3	0	3			
5	W		40		1 Ø HHN			(A563)		
		TS2	20		THREADED ROD				5	
5	U		20		1 Ø ROD	0	9 1/2	THREAD FULL LENGTH		
5	V		40	w1	PL 3/8x3	0	3			
5	W		40		1 Ø HHN			(A563)		

JOB NO. | DRAWING NO. JIB | REV.

ABM INFO PAGE	ABM INFO LINE	SHIP MARK	BILL OF MATERIAL QTY	MARK	MATERIAL	LENGTH FT	LENGTH INCHES	REMARKS	WT	PROCUREMENT NOTES
		EJ1	1		EXPANSION JOINT				3520	
4	B		1	a1L	L 8x4x1/2	1	2 3/8			
4	B		1	a1R	L 8x4x1/2	1	2 3/8			
4	C		1	a2L	L 8x4x1/2	11	6 1/8			
4	C		1	a2R	L 8x4x1/2	11	6 1/8			
4	C		1	a3L	L 8x4x1/2	12	0			
4	C		1	a3R	L 8x4x1/2	12	0			
4	D		1	a4L	L 8x4x1/2	5	9			
4	D		1	a4R	L 8x4x1/2	5	9			
4	E		1	a5L	L 6x4x1/2	5	7			
4	E		1	a5R	L 6x4x1/2	5	7			
4	F		1	a6	L 2 1/2 x2 1/2 x 3/8	5	7			
4	G		1	ba1	BAR 1/4x5 1/2	1	2 3/8			
4	G		1	bb1	BAR 1/4x5 1/2	1	2 3/8			
4	H		1	bc1	BAR 1/4x5 1/2	11	6 1/8			
4	H		1	bd1	BAR 1/4x5 1/2	11	6 1/8			
4	H		1	bf1	BAR 1/4x5 1/2	11	11 1/2			
4	H		1	bg1	BAR 1/4x5 1/2	11	11 1/2			
4	J		1	cp1	PL 1/2x20	5	9 1/8	SLIPNOT OR EQUIV.		
4	M		1	cp2	PL 1/2x8	5	9 1/8			
4	Q		1	cp3	PL 5/8x1 1/2	5	9 1/8			
4	R		1	cp4	PL 1/2x9 3/4	6	0			
4	R		1	cp5	PL 1/2x9 7/8	6	0			
4	K		1	cp6	PL 1/2x20	0	9 5/8			
4	N		1	cp7	PL 1/2x8	0	9			
4	L		1	cp8	PL 1/2x20	1	4 1/2			
4	P		1	cp9	PL 1/2x7	1	3 7/8			
4	S		5	pa1	PL 1/2x8	0	11 1/2			
4	T		5	pb1	PL 1/2x6	0	11 1/2			
4	S		5	pc1	PL 1/2x8	0	10			
4	T		5	pd1	PL 1/2x6	0	10			
5	B		31	ma1	3/4 Ø STUD	0	10	(A108) STUDS		
5	C		31	mb1	3/4 Ø STUD	0	10	(A108) BENT STUDS		
5	D		9	mc1	3/4 Ø STUD	0	7	(A108) STUDS		
5	E		1	md1	FABRIC DRAIN	31	2 1/2	3-PLY (1/8 x 33 1/8)		
5	F		2	mf1	TAPE 1/16x3	30	5 1/2	BUTYL RUBBER		
5	H		1		1/2 Ø HSB	0	2	(A325-1) (GALV)		
5	J		2		1/2 Ø HSW			(F436) (GALV)		
5	K		6		3/4 Ø CAP SCREW	0	2	(F837) STAINLESS STEEL		
5	L		50		3/4 Ø HSB	0	2 1/4	(A325-1) (GALV)		
5	M		10		3/4 Ø HSB	0	2 1/2	(A325-1) (GALV)		
5	N		22		3/4 Ø HSW			(F436) (GALV)		
5	R		6	sa1	L 4x4x3/8	0	11 3/4	SHIPPING DEVICE		
5	S		12		3/4 Ø HSB	0	3 1/4	(A325-1) SHIPPING BOLTS		
5	T		12		3/4 Ø HSW			(F436)		

JOB NO. 367 | DRAWING NO. JIB | REV.

WORK THIS DWG WITH DWG J1AB

GALVANIZE ALL STEEL AFTER FABRICATION (EXCEPT AS NOTED)

REV.	DATE	REMARKS	DWN	CHK	APVL	SHOP
0					5-12-08	

MATERIAL:	SURFACE PREP. & PAINT:	HOLES:	SHOP BOLTS:
A709-36		13/16"Ø (UN)	AS NOTED

DESCRIPTION: EXPANSION JOINT (ABUT 2)

CASCO BAY STEEL STRUCTURES, INC.
75 SPRING HILL ROAD SACO, MAINE 04072
PHONE (207) 282-7360 FAX. (207) 282-1179
TENSOR 2776

STRUCTURE: TH24 over Hoosic River BRIDGE NO. 41 POWNAL, VERMONT COUNTY OF BENNINGTON		DRAWN: JTB	DATE: 04/29
		CHK'D: TM	DATE: 05/07
LOCATION: TOWN OF POWNAL		JOB NO.	DWG NO.
PROJ NO. BRZ 1441 (19) C/2		367	J1B
CUSTOMER: VERMONT AGENCY OF TRANSPORTATION			REV. △

ER Fri, May 9, 2008 07:58:21 AM //users/jobs/2775/J1B.dgn Rev0

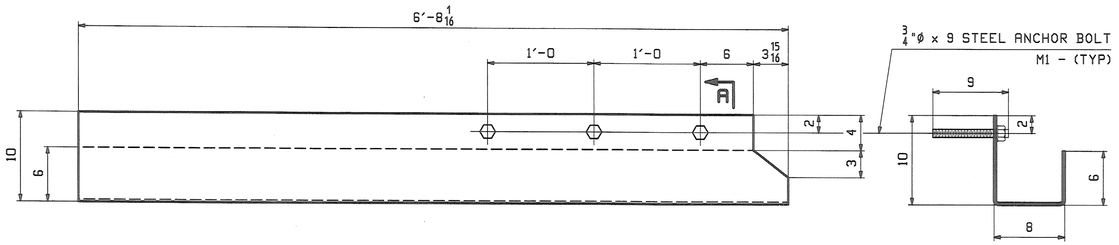

ONE ~ DOWNSPOUT - D1

SECTION A

ABM INFO		SHIP	BILL OF MATERIAL					JOB NO. 367	DRAWING NO. D1	REV.
PAGE	LINE	MARK	QTY	MARK	MATERIAL	LENGTH FT	LENGTH INCHES	REMARKS	WT	PROCUREMENT NOTES
		D1	1		DOWNSPOUT				195	
6	B		1		TS 10 x 8 x 1/4	6	8 1/16	(A500-B)		
		M1	3		ANCHOR BOLTS				1	
6	E		3		3/4 ø ROD	0	9	W/1 NUT		
6	F		3		3/4 ø HSW			(F436) (GALV)		

GALVANIZED AFTER FABRICATION

REV.	DATE	REMARKS	DWN	CHK	APVL	SHOP
0					5-12-08	

MATERIAL:	SURFACE PREP. & PAINT:	HOLES:	SHOP BOLTS:
A709-36		15/16"ø (OVS)	AS NOTED

DESCRIPTION: DOWNSPOUT

CASCO BAY STEEL STRUCTURES, INC.
75 SPRING HILL ROAD SACO, MAINE 04072
PHONE (207) 282-7360 FAX. (207) 282-1179
TENSOR 2776

STRUCTURE:	TH24 over Hoosic River BRIDGE NO. 41 POWNAL, VERMONT COUNTY OF BENNINGTON	DRAWN: JTB	DATE: 04/29
		CHKD: TM	DATE: 05/07
LOCATION:	TOWN OF POWNAL	JOB NO.	DWG NO.
PROJ NO.	BRZ 1441 (19) C/2	367	D1
CUSTOMER:	VERMONT AGENCY OF TRANSPORTATION		REV. △

RECEIVED
CK'D BY NL CK'D BY CWC
MAY 1 5 2008
RESUBMIT ____ APPROVED ✓
BY DATE

EA Fri, May 9, 2008 07:26:32 AM /users/jobs/2776/D1 : Rev0

LBFoster
Fabricated Bridge Products

REQUEST FOR INFORMATION

1016 Greentree Road
Suite 300
Pittsburgh, PA 15220
(412) 928-3514 FAX
(412) 928-3522 PHONE
cstarr@lbfosterco.com EMAIL

RFI No. 2

LBF Job Number: **AR0495**
DATE: September 10, 2008

TO: A. D. Rossi Corporation
564 Concord Avenue
St. Johnsbury, VT 05819
ATTN: **Mr. Eric Dezell**

PHONE: 802-748-4378

FAX: 802-748-9974
EMAIL: katrina@vttennis.com, eric@vttennis.com

Project: 3L Alum Railing (bridge and approaches) for Town of Pownal, County of Bennington, VT - Bridge 41, Rte TH 24, CL3 - Proj #BRZ 1441 (19) C/2

Subject: Dimensional revision

FROM: Cathy Starr

Description of RFI:

Eric/Katrina, We are seeking approval for the change to the length and location of the lower slots in the post. They were inadvertently made 2 1/2" lg vs the original 2" lg. which affected the lower dimension (see attached revised dwg). This will have no affect on the mounting to the deck. For the inspector's satisfaction, we will need approval for this change.

Sketches Attached: **YES**
Sketch No.: 1

Other: _____

Additional Notes:

Architect/Engineer Response:

Response by: _____ Response Date: _____

cc:
d Hecker

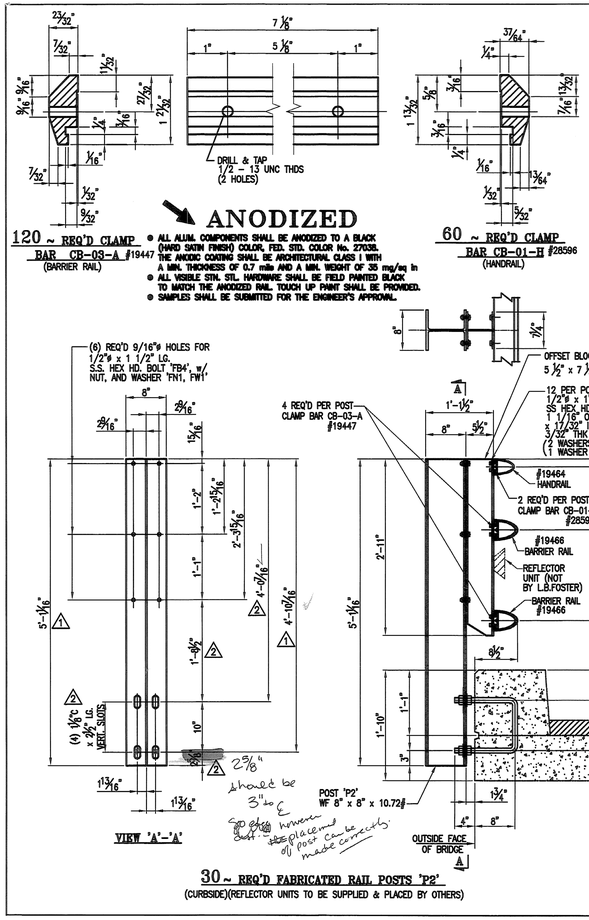

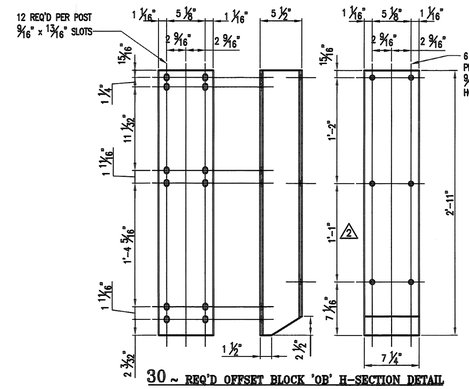

30 ~ REQ'D OFFSET BLOCK 'OB' H-SECTION DETAIL

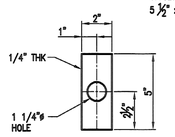

120 ~ REQ'D ALUM. PLATE WASHER 'PW1'

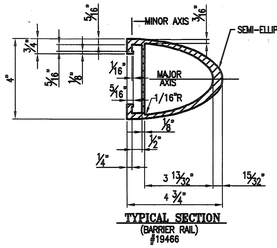

TYPICAL SECTION
(BARRIER RAIL)
#19466

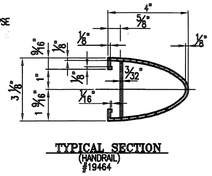

TYPICAL SECTION
(HANDRAIL)
#19464

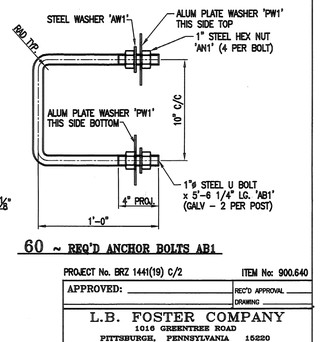

60 ~ REQ'D ANCHOR BOLTS AB1

GENERAL NOTES

ALL MATERIAL AND WORKMANSHIP SHALL BE IN ACCORDANCE WITH VERMONT AGENCY OF TRANSPORTATION STANDARD SPECIFICATIONS FOR CONSTRUCTION DATED 2006 AND ITS LATEST REVISIONS.

DESCRIPTION	ASTM	ALLOY/GR.	REMARKS
RAILS, POSTS, SPLICES, CLAMP BARS, PINS & OFFSET BLOCKS	B221	6061-T6 OR 6351-T5	MIN. YIELD STRENGTH Fy = 35,000 psi.
STAINLESS STEEL BOLTS	A193	GRADE B8	
ANCHOR U-BOLTS	A449		GALV. A153
STEEL HEX. NUTS	A563	GRADE DH	GALV. A153
STEEL WASHERS	F436		GALV. A153
PLATE WASHERS	B209	2024-T3	ALCLAD
ALUMINUM WASHERS	B209	6061-T6	
ELECTRODES FOR WELDING	AWS A5.10 ER5356		

POSTS TO BE NORMAL TO GRADE AND RAILS SHALL BE PARALLEL TO GRADE. RAILS TO BE ATTACHED TO A MINIMUM OF THREE POSTS WHEN POSSIBLE.

ALL RAILS AND WELDS TO BE FREE FROM ALL BURRS AND ROUGH EDGES. ENDS OF TUBE SECTIONS SHALL BE SAWED OR MILLED. GRIND ALL CUT EDGES SMOOTH.

ALL THREADS TO BE UNC CLASS 2A/2B.

ALL EXTRUSION TOLERANCES NOT SHOWN SHALL BE IN ACCORDANCE WITH ASTM B221.

IF CUT THREADS ARE USED, BOLT DIAMETER SHALL NOT BE LESS THAN NOMINAL DIAMETER. IF ROLLED THREADS ARE USED, BOLT DIAMETER SHALL NOT BE LESS THAN THE ROOT DIAMETER OF THREADS

THE SPLICE BAR SHALL BE ATTACHED TO THE RAIL ELEMENT AS FOLLOWS: THE RAIL SPLICE AT THE BRIDGE EXPANSION JOINT SHALL BE FASTENED ON BOTH SIDES OF THE RAIL SPLICE USING THE FULLY THREADED WASHER FACED BOLTS, TIGHTENED SECURELY TO THE END OF THREADS, AND LEAVING A 1/8" GAP. THIS ALLOWS EXPANSION ON BOTH SIDES OF THE JOINT.

ALL NUTS SHALL COMPLY WITH AMERICAN HEXAGON ANSI SPECIFICATIONS B18.2

PROJECT No. BRZ 1441(19) C/2 — ITEM No: 900.640

APPROVED: _____ — REC'D APPROVAL _____ — DRAWING _____

L.B. FOSTER COMPANY
1016 GREENTREE ROAD
PITTSBURGH, PENNSYLVANIA 15220

FOR: A. D. ROSSI CORPORATION
VERMONT AGENCY OF TRANSPORTATION
TOWN OF POWNAL, COUNTY OF BENNINGTON
BRIDGE RAILING FOR BRIDGE #41, TH 24, CL3 (LOCAL)
3L ALUM BRIDGE RAILING ~ GENERAL NOTES & TYP. DETAILS

REV.	DESCRIPTION	BY	DATE
2	REVISED DIMENSIONS PER SHOP ERROR	CMS	09 10 08
1	REVISED DIMENSIONS	CMS	09 04 08

MADE CMS DATE 05/25/08 JOB No. AR0495 CUST. No.
CHECK BJJ DATE 06/18/08 DRAWING LBS REV. No. 2

VERMONT

State of Vermont
PDD/Structures Design Section
One National Life Drive
Montpelier, VT 05633-5001
www.aot.state.vt.us

[phone] 802-828-2621
[fax] 802-828-3566
[ttd] 800-253-0191

Agency of Transportation

July 25, 2008

L.B. Foster Co.
1016 Greentree Road
Pittsburg, PA 15220

Attn: Cathy Starr

Project Name: Pownal **Project #: BRZ 1441(19) C/2**

Structure Identification: TH 24 Over the Hoosic River

The following **"Special Provision (Bridge Railing – Anodized 3 Rail Aluminum)", "Special Provision (Bridge Railing – Anodized Aluminum/Pedestrian)" and "Special Provision (Aluminum Approach Railing, Anodized)" details**, for the above project (Vendor's Job #**AR0495**), transmitted by F.W. Whitcomb, and received by our office on July 9, 2008, have been reviewed and are being returned herewith.

Sheets: LB1, LB2, LB3, LB5 - LB9, LB9A, LB10A, LB14, LB15, LB15B and LB16 are approved.

Sheets: LB4, LB4A, LB10, LB11, LB12, LB13, LB15A, AND LB15C are approved "as noted". (Please make appropriate changes as indicated on the "as noted" drawings and submit white prints for our use in the record plans for this project.)

Also, you requested that we verify the aluminum plate washer (PW1) thickness. The correct thickness is ¼" as you indicated on the plans.

You must provide notice to our fabrication inspector Jeff Clark as to the date fabrication represented by these drawings will begin. Jeff may be contacted by phone at (802)828-0044 or email at jeff.clark@state.vt.us. That notice must be received at least seven days prior to that date, as per Specification 506.03. Any material fabricated prior to the notification date is subject to rejection without further cause.

Sincerely,

Roger R. Whitcomb
Project Manager

Attachments
cc: [X] Resident Engineer Danny Breer – w/ prints
[X] F.W. Whitcomb – w/prints
[X] A.D. Rossi– w/prints
[X] Shop Inspector - Jeff Clark w/prints
[X] Materials & Research Section (C&IA Unit) – Letter only
[X] Construction Division - Letter only
[X] Roger R. Whitcomb



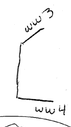

VTrans Working to Get You There! Vermont Agency of Transportation

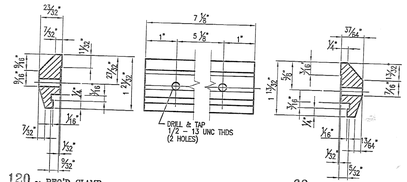

120 ~ REQ'D CLAMP BAR CB-03-A #19447 (BARRIER RAIL)

60 ~ REQ'D CLAMP BAR CB-01-H #28596 (HANDRAIL)

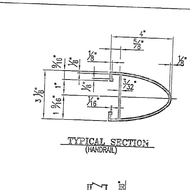

TYPICAL SECTION (HANDRAIL)



PLAN VIEW

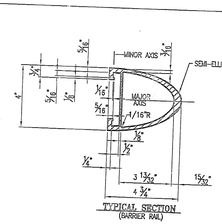

TYPICAL SECTION (BARRIER RAIL)

GENERAL NOTES

ALL MATERIAL AND WORKMANSHIP SHALL BE IN ACCORDANCE WITH VERMONT AGENCY OF TRANSPORTATION STANDARD SPECIFICATIONS FOR CONSTRUCTION DATED 2006 AND ITS LATEST REVISIONS.

DESCRIPTION	ASTM	ALLOY/GR.	REMARKS
RAIL POSTS, SPLICE, CLAMP BARS, PINS, & BALUSTER FRAMES	B221	6061-T6 OR 6351-T5	MIN. YIELD STRENGTH Fy = 35,000 psi.
BALUSTERS	B221	6061 OR 6063	T4 - USED FOR SUPERIOR EXPANDING QUALITIES
SET SCREWS FOR BALUSTERS	F593	TYPE 303	
STAINLESS STEEL BOLTS	A193	GRADE B8	
ANCHOR U-BOLTS	A449		GALV. A153
STEEL HEX NUTS	A563	GRADE DH	GALV. A153
STEEL WASHERS	F436		GALV. A153
PLATE WASHERS	B209	2024-T3	ALCLAD
ALUMINUM WASHERS	B209	6061-T6	
ELECTRODES FOR WELDING	AWS A5.10 ER5356		

POSTS TO BE NORMAL TO GRADE AND RAILS SHALL BE PARALLEL TO GRADE. RAILS TO BE ATTACHED TO A MINIMUM OF THREE POSTS WHEN POSSIBLE.

ALL RAILS AND WELDS TO BE FREE FROM ALL BURRS AND ROUGH EDGES. ENDS OF TUBE SECTIONS SHALL BE SAWED OR MILLED. GRIND ALL CUT EDGES SMOOTH.

ALL THREADS TO BE UNC CLASS 2A/2B.

ALL EXTRUSION TOLERANCES NOT SHOWN SHALL BE IN ACCORDANCE WITH ASTM B221.

IF CUT THREADS ARE USED, BOLT DIAMETER SHALL NOT BE LESS THAN NOMINAL DIAMETER. IF ROLLED THREADS ARE USED, BOLT DIAMETER SHALL NOT BE LESS THAN THE ROOT DIAMETER OF THREADS

THE SPLICE BAR SHALL BE ATTACHED TO THE RAIL ELEMENT AS FOLLOWS:
- THE RAIL SPLICE AT THE BRIDGE EXPANSION JOINT SHALL BE FASTENED ON BOTH SIDES OF THE RAIL SPLICE USING THE FULLY THREADED WASHER FACED BOLTS, TIGHTENED SECURELY TO THE END OF THREADS, AND LEAVING A 1/8" GAP. THIS ALLOWS EXPANSION ON BOTH SIDES OF THE JOINT.

ALL NUTS SHALL COMPLY WITH AMERICAN HEXAGON ANSI SPECIFICATIONS B18.2

ANODIZED

- ALL ALUM. COMPONENTS SHALL BE ANODIZED TO A BLACK (HAND RUBB FINISH) COLOR, FED. STD. COLOR No. 27038. THE ANODIC COATING SHALL BE ARCHITECTURAL CLASS I WITH A MIN. THICKNESS OF 0.7 mils AND A MIN. WEIGHT OF 35 mg/sq in
- ALL VISIBLE STN. STL. HARDWARE SHALL BE FIELD PAINTED BLACK TO MATCH THE ANODIZED RAIL. TOUCH UP PAINT SHALL BE PROVIDED.
- SAMPLES SHALL BE SUBMITTED FOR THE ENGINEER'S APPROVAL.

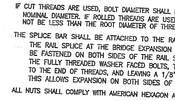

SPLICE BOLT DETAILS

APPROVER, PLEASE VERIFY

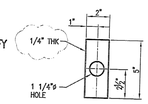

120 ~ REQ'D ALUM. PLATE WASHER 'PW1'

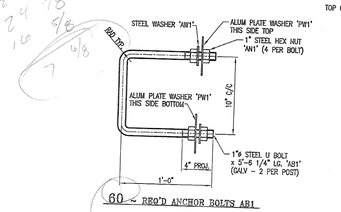

60 ~ REQ'D ANCHOR BOLTS AB1

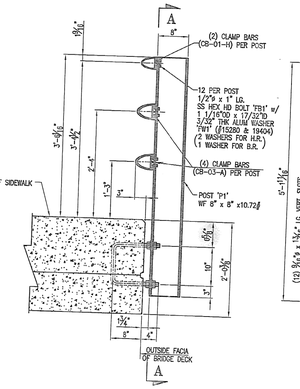

30 ~ REQ'D FABRICATED RAIL POSTS P1 (SPECIAL) (SIDEWALK)

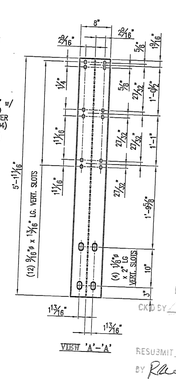

VIEW 'A'-'A'

RECEIVED
JUL 05 2008
CKD BY JKEEV
RESUBMIT ____ APPROVED ✓
BY RAW DATE 7/24/08

REV.	DESCRIPTION	BY	DATE

PROJECT No. BRZ 1441(19) C/2 ITEM No: 900.640

APPROVED: _____ REG'D APPROVAL

_____ DRAWING

L.B. FOSTER COMPANY
1515 GREENTREE ROAD
PITTSBURGH, PENNSYLVANIA 15220

FOR: A. D. ROSSI CORPORATION
VERMONT AGENCY OF TRANSPORTATION
TOWN OF POWNAL, COUNTY OF BENNINGTON
BRIDGE RAILING FOR BRIDGE #41, TH 24, CL3 (LOCAL)
AL ALUM. BRIDGE RAILING - GENERAL NOTES & TYP. DETAILS

MADE CJSR DATE 05/23/08 JOB No. ARD495 CUST. No.
CHECK RJL DATE 05/27/08 DRAWING 181 DRF. No.

H = HOLE SIDE
SS = SHORT SLOTTED SIDE
LS = LONG SLOTTED SIDE

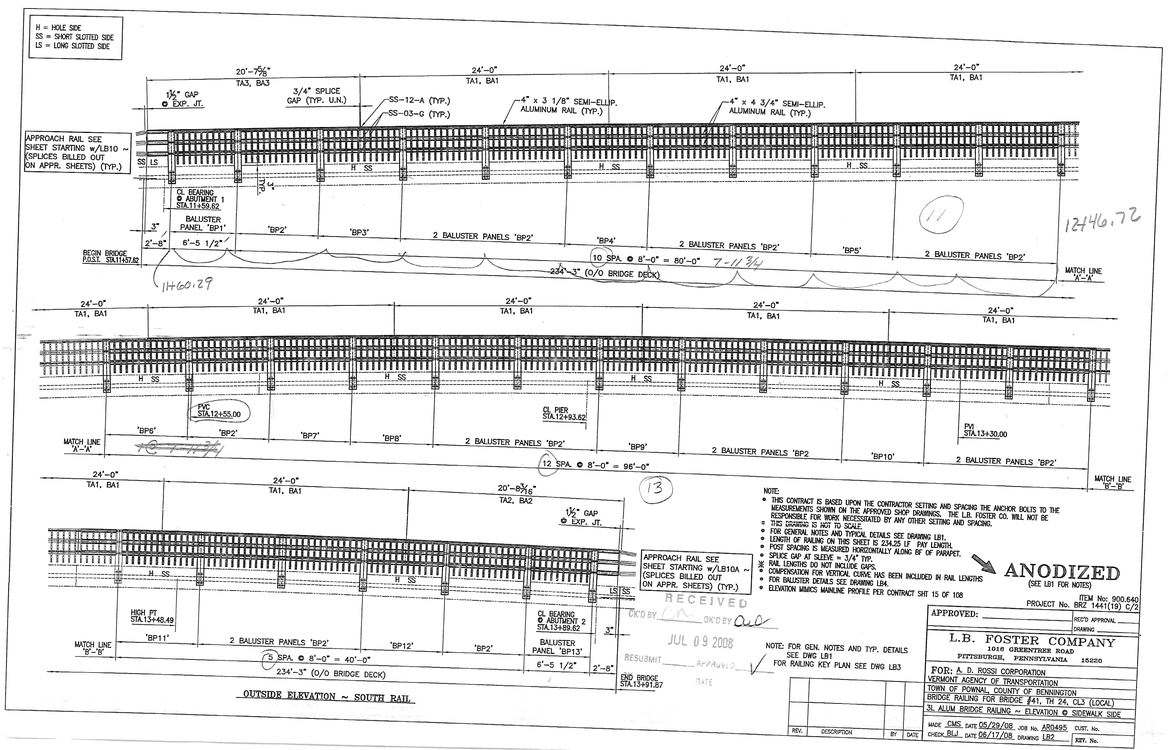

OUTSIDE ELEVATION ~ SOUTH RAIL

NOTE:
- THIS CONTRACT IS BASED UPON THE CONTRACTOR SETTING AND SPACING THE ANCHOR BOLTS TO THE MEASUREMENTS SHOWN ON THE APPROVED SHOP DRAWINGS. THE L.B. FOSTER CO. WILL NOT BE RESPONSIBLE FOR WORK NECESSITATED BY ANY OTHER SETTING AND SPACING.
- THIS DRAWING IS NOT TO SCALE.
- FOR GENERAL NOTES AND TYPICAL DETAILS SEE DRAWING LB1.
- LENGTH OF RAILING ON THIS SHEET IS 234.25 LF PAY LENGTHS.
- POST SPACING IS MEASURED HORIZONTALLY ALONG BF OF PARAPET.
- SPLICE GAP AT SLEEVE = 3/4" TYP.
- RAIL LENGTHS DO NOT INCLUDE GAPS.
- COMPENSATION FOR VERTICAL CURVE HAS BEEN INCLUDED IN RAIL LENGTHS
- FOR BALUSTER DETAILS SEE DRAWING LB4.
- ELEVATION MIMICS MAINLINE PROFILE PER CONTRACT SHT 15 OF 108

ANODIZED (SEE LB1 FOR NOTES)

NOTE: FOR GEN. NOTES AND TYP. DETAILS SEE DWG LB1
FOR RAILING KEY PLAN SEE DWG LB3

RECEIVED
JUL 09 2008

REV.	DESCRIPTION	BY	DATE

APPROVED: _____ DATE _____

ITEM No: 900.640
PROJECT No. BRZ 1441(19) C/2

RECD APPROVAL
DRAWING

L.B. FOSTER COMPANY
1016 GREENTREE ROAD
PITTSBURGH, PENNSYLVANIA 15220

FOR: A. D. ROSSI CORPORATION
VERMONT AGENCY OF TRANSPORTATION
TOWN OF POWNAL, COUNTY OF BENNINGTON
BRIDGE RAILING FOR BRIDGE #41, TH 24, CL3 (LOCAL)
3L ALUM BRIDGE RAILING ~ ELEVATION @ SIDEWALK SIDE

MADE CMS DATE 05/29/08 JOB No. AR0495 CUST. No.
CHECK BLJ DATE 06/17/08 DRAWING LB2 REV. No.

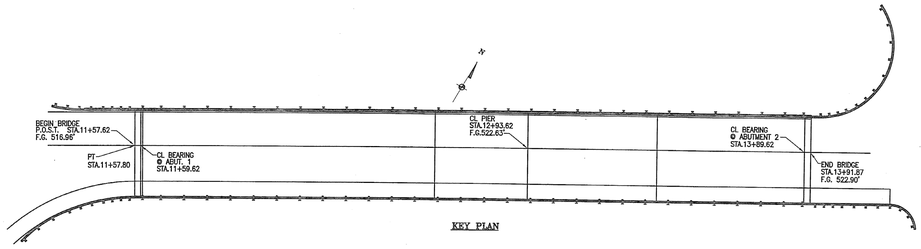

KEY PLAN

RECEIVED
CK'D BY CK'D BY
JUL 09 2008
RESUBMIT APPROVED
BY DATE

PROJECT No. BRZ 1441(19) C/2 ITEM No: 900.640

APPROVED: RECD APPROVAL
DRAWING

L.B. FOSTER COMPANY
1016 GREENTREE ROAD
PITTSBURGH, PENNSYLVANIA 15220

FOR: A. D. ROSSI CORPORATION
VERMONT AGENCY OF TRANSPORTATION
TOWN OF POMNAL, COUNTY OF BENNINGTON
BRIDGE RAILING FOR BRIDGE #41, TH 24, CL3 (LOCAL)
St. ALUM BRIDGE RAILING -- KEY PLAN

MADE CMS DATE 05/29/08 JOB No. A80495 CUST. No.
CHECK RLJ DATE 06/17/08 DRAWING LB3 REV. No.

REV.	DESCRIPTION	BY	DATE

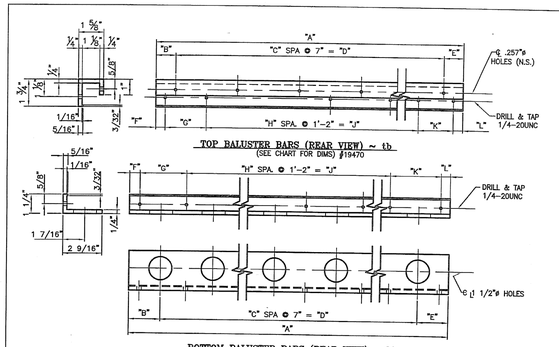

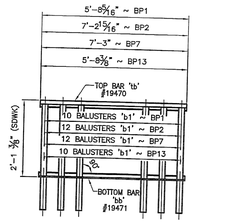

ONE REQ'D. ~ BALUSTER PANEL ASSEMBLY 'BP1'
17 REQ'D. ~ BALUSTER PANEL ASSEMBLY 'BP2'
ONE REQ'D. ~ BALUSTER PANEL ASSEMBLY ' BP7'
ONE REQ'D. ~ BALUSTER PANEL ASSEMBLY 'BP13'

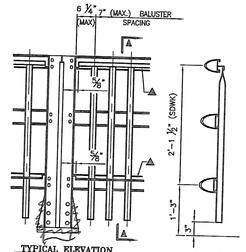

TYPICAL ELEVATION

⚠ 1/4"-20UNC S.S. SOCKET SET SCREW x 1/2" ~ "SS1" (#22079) EVERY OTHER SPACE BETWEEN BALUSTERS IF POSSIBLE

SECTION A-A

MARK	QTY	"A"	"B"	"C"	"D"	"E"	"F"	"G"	"H"	"J"	"K"	"L"	PANEL ASSY.
tb1 / bb1	1	5'-8 5/16"	2 5/8"	9	5'-3"	2 11/16"	1"	5 3/16"	4	4'-8"	5 1/8"	1"	BP1
tb2 / bb2	17	7'-2 15/16"	4 15/16"	11	6'-5"	5"	2"	6 7/16"	5	5'-10"	6 7/16"	2 1/16"	BP2
tb7 / bb7	1	7'-3"	5"	11	6'-5"	5"	2"	6 1/2"	5	5'-10"	6 1/2"	2"	BP7
tb13 / bb13	1	5'-8 3/8"	2 11/16"	9	5'-3"	2 11/16"	1"	5 3/16"	4	4'-8"	5 3/16"	1"	BP13

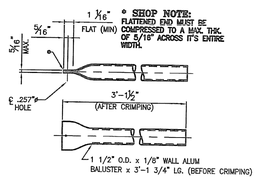

236 ~ REQ'D BALUSTERS 'b1'
#19451

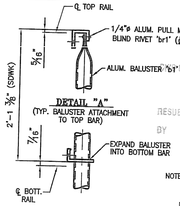

DETAIL "A"
(TYP. BALUSTER ATTACHMENT TO TOP BAR)

DETAIL "B"
(TYP. BALUSTER ATTACHMENT TO BOTTOM BAR)

NOTE: FOR GEN. NOTES AND TYP. DETAILS SEE DWG LB1

ANODIZED
(SEE LB1 FOR NOTES)

RECEIVED
JUL 09 2008
BY

RESUBMIT ____ APPROVED AS NOTED
BY DATE

REV.	DESCRIPTION	BY	DATE

PROJECT No. BRZ 1441(19) C/2 ITEM No: 900.640

APPROVED: _____ REQ'D APPROVAL ____

DRAWING ____

L.B. FOSTER COMPANY
1016 GREENTREE ROAD
PITTSBURGH, PENNSYLVANIA 15220

FOR: A. D. ROSSI CORPORATION
VERMONT AGENCY OF TRANSPORTATION
TOWN OF POWNAL, COUNTY OF BENNINGTON
BRIDGE RAILING FOR BRIDGE #41, TH 24, CL3 (LOCAL)
3L ALUM BRIDGE RAILING ~ BALUSTER PANEL DETAILS

MADE CMS DATE 05/29/08 JOB No. ARD495 CUST. No.
CHECK BLJ DATE 05/18/08 DRAWING LB4 REV. No.

TOP BALUSTER BARS (REAR VIEW) ~ bb
(SEE CHART FOR DIMS) ∱19470

BOTTOM BALUSTER BARS (REAR VIEW) ~ bb
(SEE CHART FOR DIMS) ∱19471

TYPICAL ELEVATION
▲ 1/4"-20UNC S.S. SOCKET SET SCREW x 1/2" ~ "SS1" (∱22079) EVERY OTHER SPACE BETWEEN BALUSTERS IF POSSIBLE

ONE REQ'D. ~ BALUSTER PANEL ASSEMBLY 'BP3'
ONE REQ'D. ~ BALUSTER PANEL ASSEMBLY 'BP4'
ONE REQ'D. ~ BALUSTER PANEL ASSEMBLY 'BP5'
ONE REQ'D. ~ BALUSTER PANEL ASSEMBLY 'BP6'
ONE REQ'D. ~ BALUSTER PANEL ASSEMBLY 'BP8'
ONE REQ'D. ~ BALUSTER PANEL ASSEMBLY 'BP9'
ONE REQ'D. ~ BALUSTER PANEL ASSEMBLY 'BP10'
ONE REQ'D. ~ BALUSTER PANEL ASSEMBLY 'BP11'
ONE REQ'D. ~ BALUSTER PANEL ASSEMBLY 'BP12'

MARK	QTY	"A"	"B"	"C"	"D"	"E"	"F"	"G"	"H"	"J"	"K"	"L"	"M"	"N"	PANEL ASSY.
bb3 ~ bb3	1	7'-2 7/8"	4 15/16"	11	6'-5"	4 15/16"	2'-0 11/16"	2'-2 7/16"	2"	6 7/16"	1'-9"	1'-9"	6 7/16"	2"	BP3
bb4 ~ bb4	1	7'-2 7/8"	4 15/16"	11	6'-5"	4 15/16"	2'-1"	2'-2 1/8"	2"	6 7/16"	1'-9 1/2"	1'-8 1/2"	6 7/16"	2"	BP4
bb5 ~ bb5	1	7'-2 7/8"	4 15/16"	11	6'-5"	4 15/16"	2'-1 5/8"	2'-1 1/2"	2"	6 7/16"	1'-9 1/2"	1'-8 1/2"	6 7/16"	2"	BP5
bb6 ~ bb6	1	7'-2 7/8"	4 15/16"	11	6'-5"	4 15/16"	2'-2 1/16"	2'-1 1/16"	2"	6 7/16"	1'-10"	1'-8"	6 7/16"	2"	BP6
bb8 ~ bb8	1	7'-3"	5"	11	6'-5"	5"	2'-2 1/4"	2'-1"	2"	6 1/2"	1'-10 1/4"	1'-7 3/4"	6 1/2"	2 1/16"	BP8
bb9 ~ bb9	1	7'-2 15/16"	4 15/16"	11	6'-5"	5"	2'-2 3/8"	2'-0 13/16"	2"	6 7/16"	1'-10 1/2"	1'-7 1/2"	6 7/16"	2 1/16"	BP9
bb10 ~ bb10	1	7'-2 15/16"	4 15/16"	11	6'-5"	5"	2'-2 1/2"	2'-0 11/16"	2"	6 7/16"	1'-10 1/2"	1'-7 1/2"	6 7/16"	2 1/16"	BP10
bb11 ~ bb11	1	7'-2 15/16"	4 15/16"	11	6'-5"	5"	2'-1 9/16"	2'-1 5/8"	2"	6 7/16"	1'-9"	1'-9"	6 7/16"	2 1/16"	BP11
bb12 ~ bb12	1	7'-2 15/16"	4 15/16"	11	6'-5"	5"	2'-3 1/16"	2'-0 1/8"	2"	6 7/16"	1'-9"	1'-9"	6 7/16"	2 1/16"	BP12

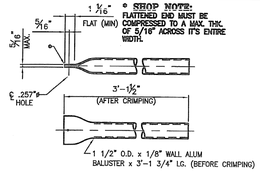

108 ~ REQ'D BALUSTERS 'b1'
∱19451

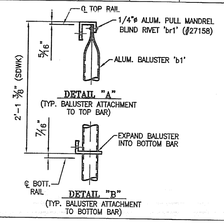

NOTE: FOR GEN. NOTES AND TYP. DETAILS SEE DWG LB1

RECEIVED
CK'D BY _____ OK'D BY _____
JUL 09 2008
RESUBMIT _____ APPROVED AS NOTED
BY _____ DATE

ANODIZED
(SEE LB1 FOR NOTES)

PROJECT No. BRZ 1441(19) C/2 ITEM NO. 900.640
APPROVED: _____ REC'D APPROVAL _____
DRAWING _____

L.B. FOSTER COMPANY
1016 GREENTREE ROAD
PITTSBURGH, PENNSYLVANIA 15220

FOR: A. B. ROSSI CORPORATION
VERMONT AGENCY OF TRANSPORTATION
TOWN OF POWNAL, COUNTY OF BENNINGTON
BRIDGE RAILING FOR BRIDGE #41, TH 24, CL3 (LOCAL)
SL ALUM. BRIDGE RAILING ~ BALUSTER PANEL DETAILS

REV.	DESCRIPTION	BY	DATE

MADE CMS DATE 06/03/08 JOB No. AR0495 CUST. No.
CHECK BLJ DATE 06/19/07 DRAWING LB4A REV. No.

120 ~ REQ'D CLAMP BAR CB-03-A #19447 (BARRIER RAIL)

60 ~ REQ'D CLAMP BAR CB-01-H #28596 (HANDRAIL)

ANODIZED

- ALL ALUM. COMPONENTS SHALL BE ANODIZED TO A BLACK (HARD SATIN FINISH) COLOR, FED. STD. COLOR No. 27038. THE ANODIC COATING SHALL BE ARCHITECTURAL CLASS I WITH A MIN. THICKNESS OF 0.7 mils AND A MIN. WEIGHT OF 30 mg/sq in
- ALL VISIBLE STN. STL. HARDWARE SHALL BE FIELD PAINTED BLACK TO MATCH THE ANODIZED RAIL. TOUCH UP PAINT SHALL BE PROVIDED.
- SAMPLES SHALL BE SUBMITTED FOR THE ENGINEER'S APPROVAL.

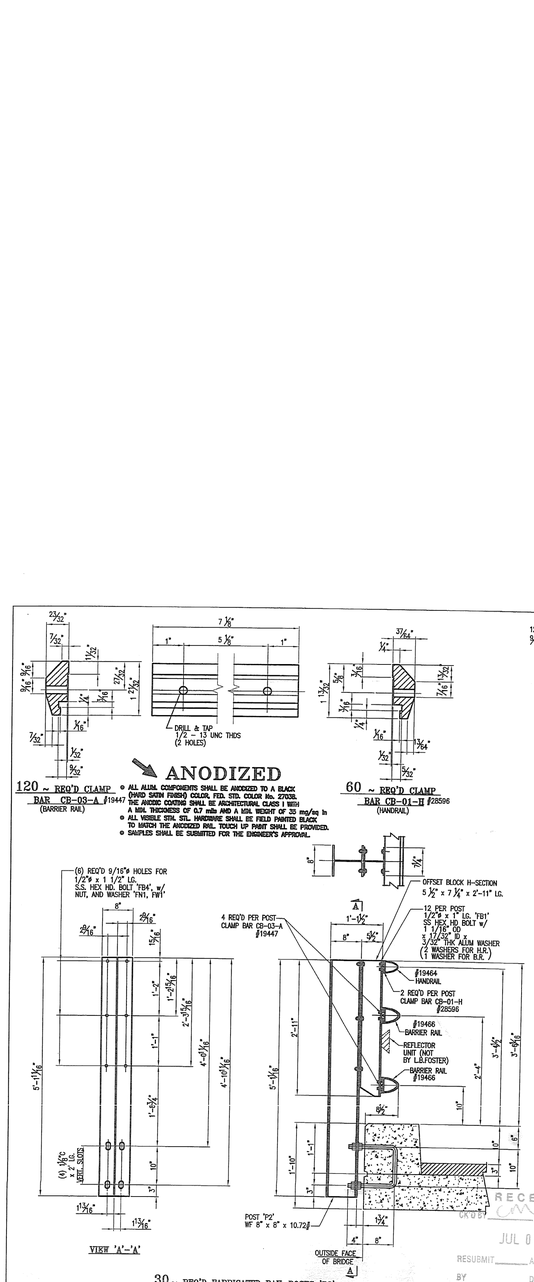

30 ~ REQ'D FABRICATED RAIL POSTS 'P2'
(CURBSIDE)(REFLECTOR UNITS TO BE SUPPLIED & PLACED BY OTHERS)

30 ~ REQ'D OFFSET BLOCK 'OB' H-SECTION DETAIL

APPROVER, PLEASE VERIFY

120 ~ REQ'D ALUM. PLATE WASHER 'PW1'

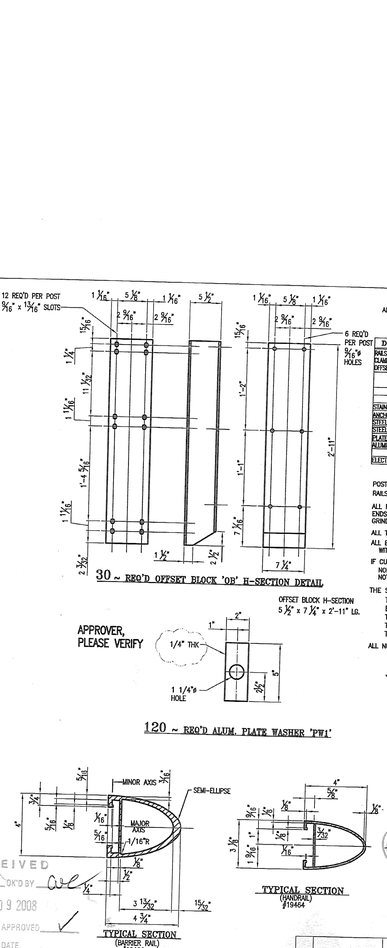

TYPICAL SECTION (HANDRAIL) #19464

60 ~ REQ'D ANCHOR BOLTS AB1

GENERAL NOTES

ALL MATERIAL AND WORKMANSHIP SHALL BE IN ACCORDANCE WITH VERMONT AGENCY OF TRANSPORTATION STANDARD SPECIFICATIONS FOR CONSTRUCTION DATED 2006 AND ITS LATEST REVISIONS.

DESCRIPTION	ASTM	ALLOY/GR.	REMARKS
RAIL POST, SPICES, CLAMP BARS, PNG & OFFSET BLOCKS	B221	6061-T6 OR 6351-T5	MIN. YIELD STRENGTH Fy = 35,000 psi.
STAINLESS STEEL BOLTS	A193	GRADE B8	
ANCHOR U-BOLTS	A449		GALV. A153
STEEL HEX. NUTS	A563	GRADE DH	GALV. A153
STEEL WASHERS	F436		GALV. A153
PLATE WASHERS	B209	2024-T3	ALCLAD
ALUMINUM WASHERS	B209	6061-T6	
ELECTRODES FOR WELDING		AWS A5.10 ER5356	

POSTS TO BE NORMAL TO GRADE AND RAILS SHALL BE PARALLEL TO GRADE. RAILS TO BE ATTACHED TO A MINIMUM OF THREE POSTS WHEN POSSIBLE.

ALL RAILS AND WELDS TO BE FREE FROM ALL BURRS AND ROUGH EDGES. ENDS OF TUBE SECTIONS SHALL BE SAWED OR MILLED. GRIND ALL CUT EDGES SMOOTH.

ALL THREADS TO BE UNC CLASS 2A/2B.

ALL EXTRUSION TOLERANCES NOT SHOWN SHALL BE IN ACCORDANCE WITH ASTM B221.

IF CUT THREADS ARE USED, BOLT DIAMETER SHALL NOT BE LESS THAN NOMINAL DIAMETER. IF ROLLED THREADS ARE USED, BOLT DIAMETER SHALL NOT BE LESS THAN THE ROOT DIAMETER OF THREADS

THE SPLICE BAR SHALL BE ATTACHED TO THE RAIL ELEMENT AS FOLLOWS:
THE RAIL SPLICE AT THE BRIDGE EXPANSION JOINT SHALL BE FASTENED ON BOTH SIDES OF THE RAIL SPLICE USING THE FULLY THREADED WASHER FACED BOLTS, TIGHTENED SECURELY TO THE END OF THREADS, AND LEAVING A 1/8" GAP. THIS ALLOWS EXPANSION ON BOTH SIDES OF THE JOINT.

ALL NUTS SHALL COMPLY WITH AMERICAN HEXAGON ANSI SPECIFICATIONS B18.2

RECEIVED
JUL 09 2008
RESUBMIT ____ APPROVED ____
BY ____ DATE ____

REV.	DESCRIPTION	BY	DATE

PROJECT No. BRZ 1446(19) C/2 — ITEM No: 900.640

APPROVED: _____ REQ'D APPROVAL _____ DRAWING _____

L.B. FOSTER COMPANY
1016 GREENTREE ROAD
PITTSBURGH, PENNSYLVANIA 15220

FOR: A. D. BOSSI CORPORATION
VERMONT AGENCY OF TRANSPORTATION
TOWN OF POWNAL, COUNTY OF BENNINGTON
BRIDGE RAILING FOR BRIDGE #41, TH 24, CL3 (LOCAL)
3L ALUM BRIDGE RAILING — GENERAL NOTES & TYP. DETAILS

WORK CMS, DATE 05/20/08, JOB No. AR0495, CUST. No. ____
CHECK BWJ, DATE 05/18/08, DRAWING LBS, REF. No. ____

H = HOLE SIDE
SS = SHORT SLOTTED SIDE
LS = LONG SLOTTED SIDE

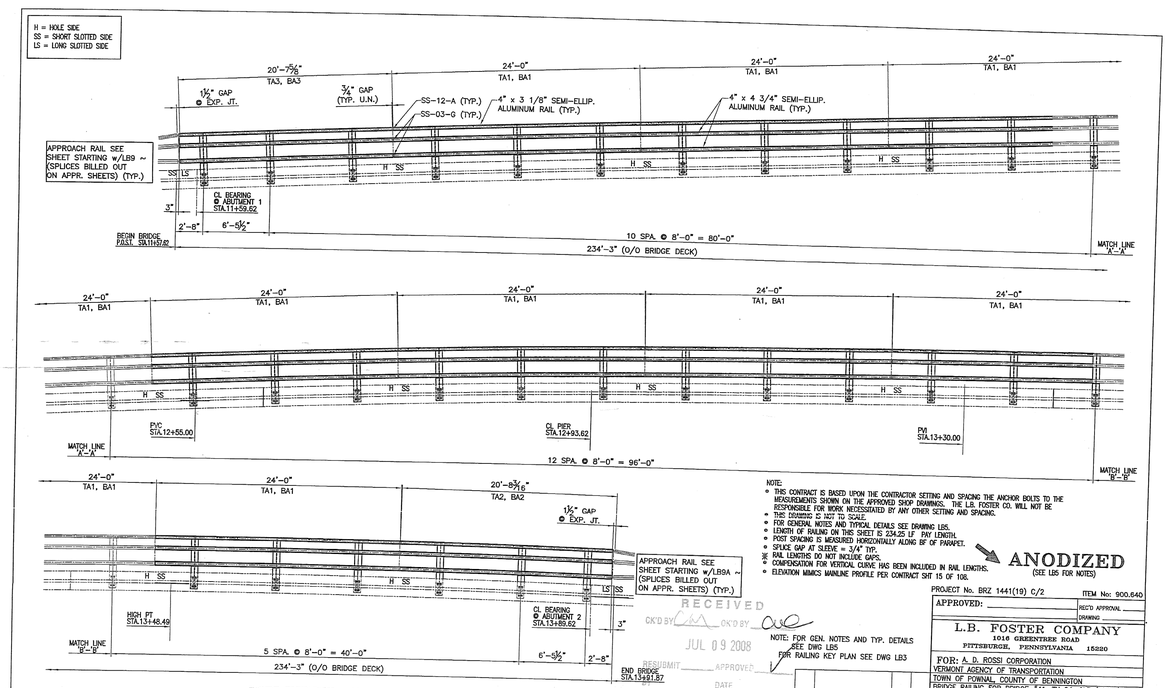

INSIDE ELEVATION ~ NORTH RAIL

NOTE:
- THIS CONTRACT IS BASED UPON THE CONTRACTOR SETTING AND SPACING THE ANCHOR BOLTS TO THE MEASUREMENTS SHOWN ON THE APPROVED SHOP DRAWINGS. THE L.B. FOSTER CO. WILL NOT BE RESPONSIBLE FOR WORK NECESSITATED BY ANY OTHER SETTING AND SPACING.
- THIS DRAWING IS NOT TO SCALE.
- FOR GENERAL NOTES AND TYPICAL DETAILS SEE DRAWING LB5.
- LENGTH OF RAILING ON THIS SHEET IS 234.25 LF PAY LENGTH.
- POST SPACING IS MEASURED HORIZONTALLY ALONG BF OF PARAPET.
- SPLICE GAP AT SLEEVE = 3/4" TYP.
- RAIL LENGTHS DO NOT INCLUDE GAPS.
- COMPENSATION FOR VERTICAL CURVE HAS BEEN INCLUDED IN RAIL LENGTHS.
- ELEVATION MIMICS MAINLINE PROFILE PER CONTRACT SHT 15 OF 108.

ANODIZED (SEE LB5 FOR NOTES)

NOTE: FOR GEN. NOTES AND TYP. DETAILS SEE DWG LB5
FOR RAILING KEY PLAN SEE DWG LB3

RECEIVED
JUL 09 2008

REV.	DESCRIPTION	BY	DATE

RESUBMIT ____ APPROVED ____
DATE

PROJECT No. BRZ 1441(19) C/2 ITEM No: 900.640

APPROVED: ____ REC'D APPROVAL ____
DRAWING ____

L.B. FOSTER COMPANY
1016 GREENTREE ROAD
PITTSBURGH, PENNSYLVANIA 15220

FOR: A. D. ROSSI CORPORATION
VERMONT AGENCY OF TRANSPORTATION
TOWN OF POWNAL, COUNTY OF BENNINGTON
BRIDGE RAILING FOR BRIDGE #41, TH 24, CL3 (LOCAL)
3L ALUM BRIDGE RAILING ~ ELEVATION @ CURB SIDE

MADE CMS DATE 05/29/08 JOB No. AR0495 CUST. No.
CHECK ____ DATE ____ DRAWING LB6 REV. No.

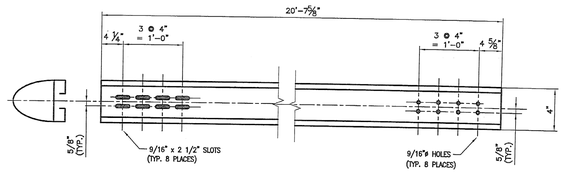

4 REQ'D. ~ RAIL 'BA3'
(BACK ELEVATION VIEW)

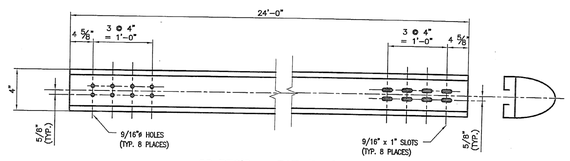

32 REQ'D. ~ RAIL 'BA1'
(BACK ELEVATION VIEW)

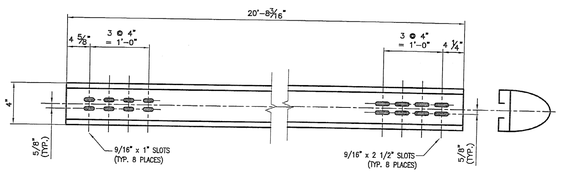

4 REQ'D. ~ RAIL 'BA2'
(BACK ELEVATION VIEW)

PRELIMINARY
06/20/08

ANODIZED
(SEE NOTES ON LB1, LB5)

RECEIVED
CK'D BY MA OK'D BY
JUL 09 2008
RESUBMIT ____ APPROVED ✓
BY DATE

REV.	DESCRIPTION	BY	DATE

PROJECT No. BRZ 1441(19) C/2 ITEM No: 900.640

APPROVED: ____ REC'D APPROVAL ____

DRAWING

L.B. FOSTER COMPANY
1016 GREENTREE ROAD
PITTSBURGH, PENNSYLVANIA 15220

FOR: A. D. ROSSI CORPORATION
VERMONT AGENCY OF TRANSPORTATION
TOWN OF POWNAL COUNTY OF BENNINGTON
BRIDGE RAILING FOR BRIDGE #41, TH 24, CL3 (LOCAL)
AL. ALUM BRIDGE RAILING -- RAIL DETAILS

MADE CMS DATE 05/29/08 JOB No. AR0495 CUST. No.
CHECK BJ DATE 06/18/08 DRAWING LB7 REV. No.

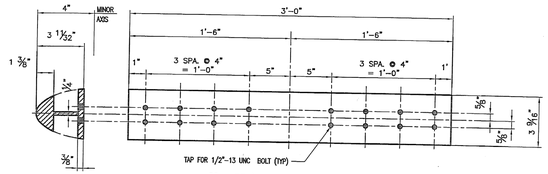

36 ~ REQ'D SPLICE SLEEVES SS-03-G
(BARRIER RAIL)

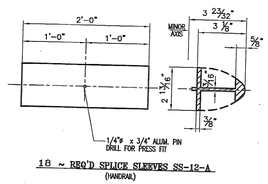

18 ~ REQ'D SPLICE SLEEVES SS-12-A
(HANDRAIL)

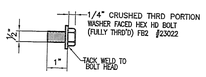

SPLICE BOLT DETAILS

RECEIVED
CK'D BY [illegible] OK'D BY CWC
JUL 09 2008
RESUBMIT _____ APPROVED ✓
BY DATE

ANODIZED
(SEE NOTES ON LS1 or LS5)

REV.	DESCRIPTION	BY	DATE

PROJECT No. BRZ 1441(19) C/2 ITEM No: 900.640
APPROVED: _____ REQ'D APPROVAL _____
DRAWING _____

L.B. FOSTER COMPANY
1016 GREENTREE ROAD
PITTSBURGH, PENNSYLVANIA 15220

FOR: A. D. ROSSI CORPORATION
VERMONT AGENCY OF TRANSPORTATION
TOWN OF POWNAL, COUNTY OF BENNINGTON
BRIDGE RAILING FOR BRIDGE #41, TH 24, CL3 (LOCAL)
3L ALUM BRIDGE RAILING ~ SPLICE DETAILS

MADE CMS DATE 05/29/08 JOB No. AR0495 CUST. No.
CHECK BJJ DATE 06/18/08 DRAWING LBB REF. No.

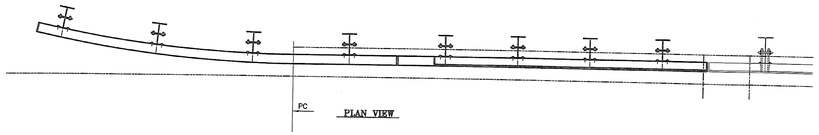

PC

PLAN VIEW

NOTE:
- RAIL LENGTHS DO NOT INCLUDE END CAPS AND/OR GAPS.
- LENGTH OF APPROACH RAILING ON THIS SHEET IS 29.2 LF PAY LENGTH.
- LENGTHS SHOWN THUS ( ) ARE ACTUAL LENGTHS ALONG FRT FACE OF RAILING

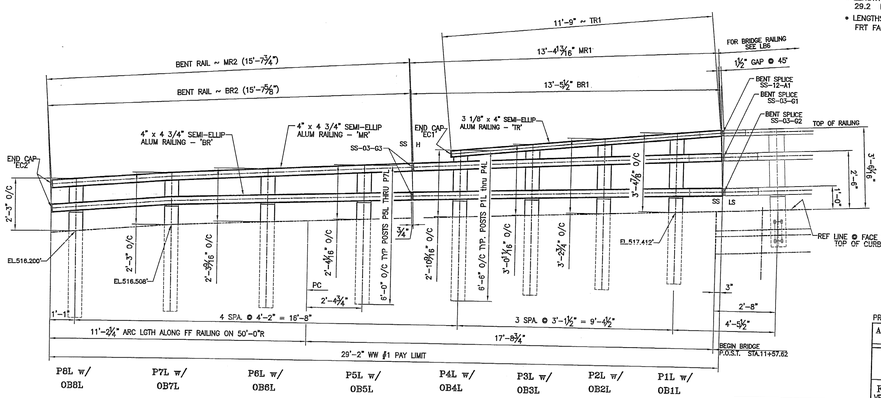

INSIDE ELEVATION OF WW #1 NW APPROACH RAIL

RECEIVED
CK'D BY ____ CK'D BY ____
JUL 09 2008
RESUBMIT ____ APPROVED ____
BY ____ DATE ____

ANODIZED
(SEE LB1 or LB5 FOR NOTES)

REV.	DESCRIPTION	BY	DATE

PROJECT No. BRZ 1441(19) C/2 — ITEM No: 900.640

APPROVED: ____ — RE'D APPROVAL ____ — DRAWING ____

L.B. FOSTER COMPANY
1016 GREENTREE ROAD
PITTSBURGH, PENNSYLVANIA 15220

FOR: A. D. ROSSI CORPORATION
VERMONT AGENCY OF TRANSPORTATION
TOWN OF POWNAL COUNTY OF BENNINGTON
BRIDGE RAILING FOR BRIDGE #41, TH 24, CL3 (LOCAL)
3L ALUMINUM APPROACH RAIL ELEVATIONS

MADE CMS DATE 06/04/08 JOB No. AR0495 CUST. No.
CHECK BJJ DATE 06/18/08 DRAWING LB9 REF. No.

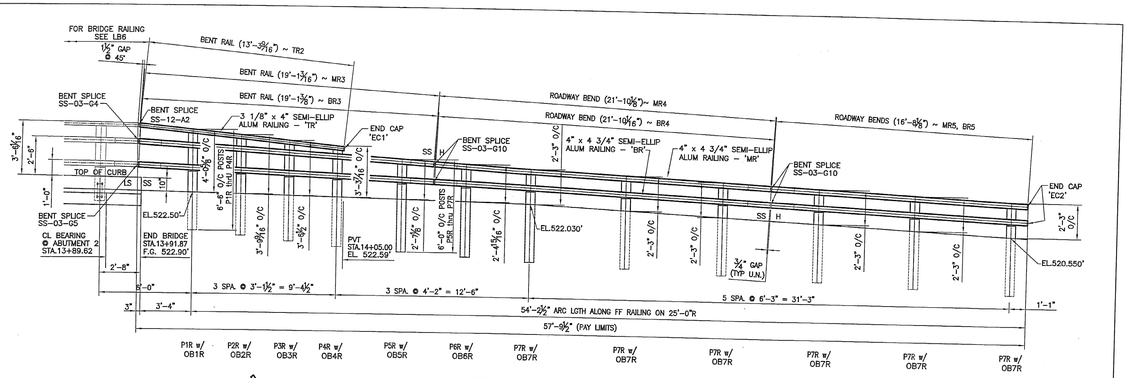

INSIDE ELEVATION OF WW #3 NE APPROACH RAIL

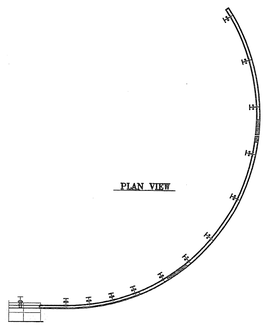

PLAN VIEW

NOTE:
- RAIL LENGTHS DO NOT INCLUDE END CAPS AND/OR GAPS.
- LENGTH OF APPROACH RAILING ON THIS SHEET IS 57.79 LF PAY LENGTH.
- LENGTHS SHOWN THUS ( ) ARE ACTUAL LENGTHS ALONG FRT FACE OF RAILING

RECEIVED
CK'D BY ____ ON'D BY ____
JUL 09 2008
RESUBMIT ____ APPROVED ____
BY DATE

ANODIZED
(SEE LB1 or LB5 FOR NOTES)

REV.	DESCRIPTION	BY	DATE

PROJECT No. BRZ 1441(19) C/2 ITEM No: 900.640
APPROVED: ____ REC'D APPROVAL ____ DRAWING ____

L.B. FOSTER COMPANY
1016 GREENTREE ROAD
PITTSBURGH, PENNSYLVANIA 15220

FOR: A. D. ROSSI CORPORATION
VERMONT AGENCY OF TRANSPORTATION
TOWN OF POWNAL, COUNTY OF BENNINGTON
BRIDGE RAILING FOR BRIDGE #41, TH 24, CL3 (LOCAL)
SL ALUMINUM APPROACH RAIL ELEVATIONS

MADE CMS DATE 06/04/08 JOB No. ARD495 CUST. No.
CHECK BJJ DATE 06/19/08 DRAWING LB9A KEY. No.

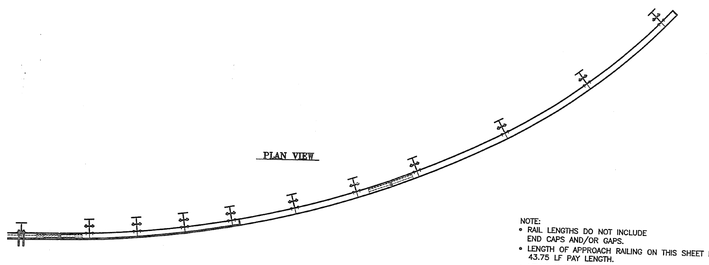

NOTE:
- RAIL LENGTHS DO NOT INCLUDE END CAPS AND/OR GAPS.
- LENGTH OF APPROACH RAILING ON THIS SHEET IS 43.75 LF PAY LENGTH.
- LENGTHS SHOWN THUS ( ) ARE ACTUAL LENGTHS ALONG FRT. FACE OF RAILING

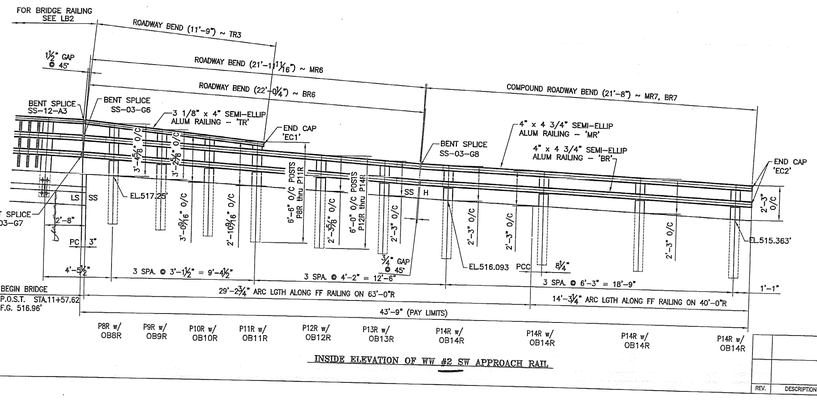

INSIDE ELEVATION OF WW #2 SW APPROACH RAIL

RECEIVED
CK'D BY CMS CK'D BY CWR
JUL 09 2008
RESUBMIT ____ APPROVED AS NOTED
BY DATE

ANODIZED
(SEE LB1 or LB5 FOR NOTES)

REV.	DESCRIPTION	BY	DATE

PROJECT No. BRZ 1441(19) C/2 — ITEM No: 900.640

APPROVED: _____ — REC'D APPROVAL _____ — DRAWING _____

L.B. FOSTER COMPANY
1016 GREENTREE ROAD
PITTSBURGH, PENNSYLVANIA 15220

FOR: A. D. ROSSI CORPORATION
VERMONT AGENCY OF TRANSPORTATION
TOWN OF POWNAL, COUNTY OF BENNINGTON
BRIDGE RAILING FOR BRIDGE #41, TH 24, CL3 (LOCAL)
3L ALUMINUM APPROACH RAIL ELEVATIONS

MADE CMS DATE 06/06/08 — JOB No. ARD495 — CUST. No.
CHECK RHJ DATE 06/19/08 — DRAWING LB10 — REV. No.

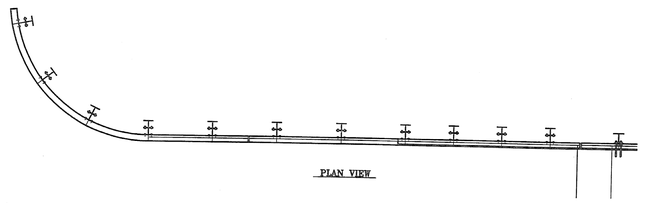

PLAN VIEW

NOTE:
- RAIL LENGTHS DO NOT INCLUDE END CAPS AND/OR GAPS.
- LENGTH OF APPROACH RAILING ON THIS SHEET IS 41.58 LF PAY LENGTH.
- LENGTHS SHOWN THUS ( ) ARE ACTUAL LENGTHS ALONG FRT FACE OF RAILING

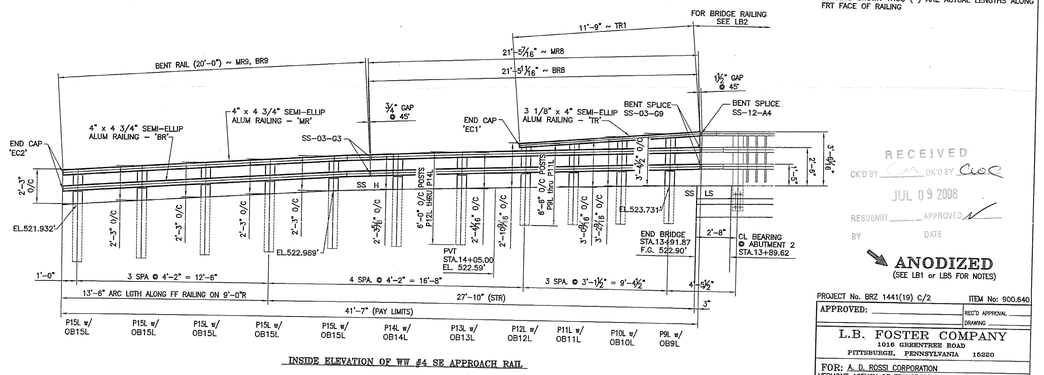

INSIDE ELEVATION OF WW #4 SE APPROACH RAIL

RECEIVED
CK'D BY ____ OK'D BY CLC
JUL 09 2008
RESUBMIT ____ APPROVED ✓
BY ____ DATE

ANODIZED
(SEE LB1 or LB5 FOR NOTES)

REV.	DESCRIPTION	BY	DATE

PROJECT No. BRZ 1441(19) C/2 — ITEM No: 900.640

APPROVED: _____ — RED'D APPROVAL _____ — DRAWING _____

L.B. FOSTER COMPANY
1016 GREENTREE ROAD
PITTSBURGH, PENNSYLVANIA 15220

FOR: A. D. ROSSI CORPORATION
VERMONT AGENCY OF TRANSPORTATION
TOWN OF POWNAL, COUNTY OF BENNINGTON
BRIDGE RAILING FOR BRIDGE #41, TH 24, CL3 (LOCAL)
3L ALUMINUM APPROACH RAIL ELEVATIONS

MADE CMO DATE 06/06/08 — JOB No. ARD495 — CUST. No.
CHECK BJJ DATE 06/19/08 — DRAWING LB10A — REV. No.

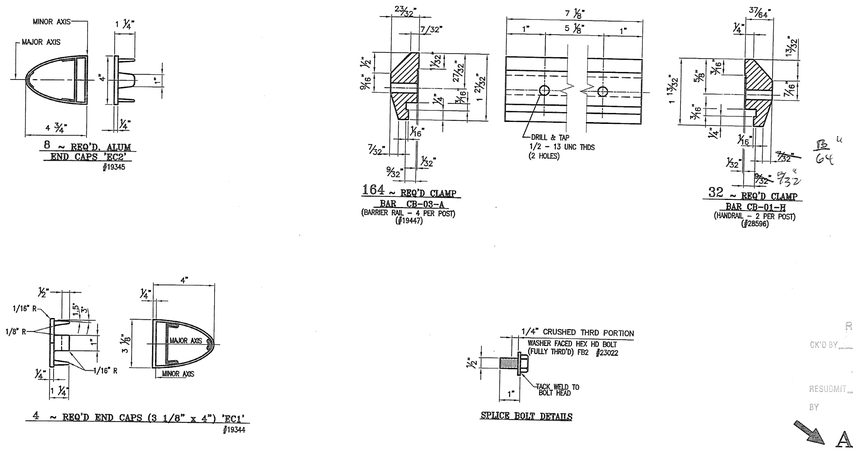

8 ~ REQ'D. ALUM END CAPS 'EC2'
#19345

164 ~ REQ'D CLAMP
BAR CB-03-A
(BARRIER RAIL - 4 PER POST)
(#19447)

32 ~ REQ'D CLAMP
BAR CB-01-H
(HANDRAIL - 2 PER POST)
(#28596)

4 ~ REQ'D END CAPS (3 1/8" x 4") 'EC1'
#19344

SPLICE BOLT DETAILS

RECEIVED
CK'D BY ____ OK'D BY [signature]
JUL 09 2008
RESUBMIT ____ APPROVED AS NOTED
BY DATE

ANODIZED
(SEE LB1 or LB5 FOR NOTES)

PROJECT No. BRZ 1441(19) C/2 ITEM No: 900.640
APPROVED: ____ REC'D APPROVAL ____ DRAWING ____

L.B. FOSTER COMPANY
1016 GREENTREE ROAD
PITTSBURGH, PENNSYLVANIA 15220

FOR: A. D. ROSSI CORPORATION
VERMONT AGENCY OF TRANSPORTATION
TOWN OF POWNAL, COUNTY OF BENNINGTON
BRIDGE RAILING FOR BRIDGE #41, TH 24, CL3 (LOCAL)
3L ALUMINUM APPROACH RAIL ~ MISC DETAILS

MADE CMS DATE 06/08/08 JOB No. AR0495 CUST. No.
CHECK BLJ DATE 06/19/08 DRAWING LB11 REV. No.

REV.	DESCRIPTION	BY	DATE

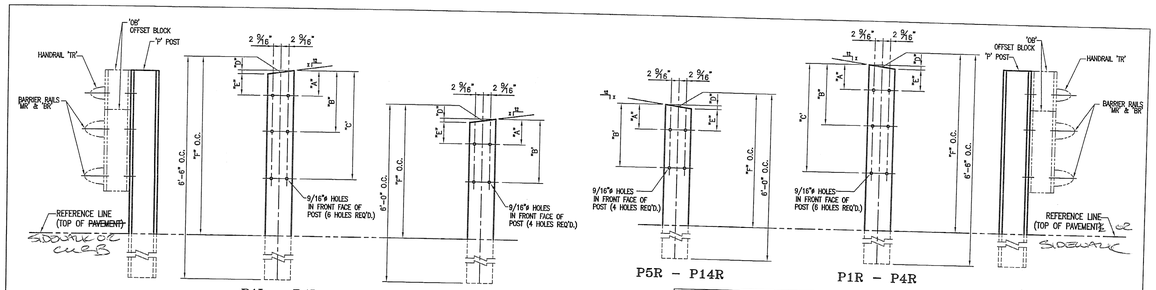

P1L – P4L

P5L – P15L

P5R – P14R

P1R – P4R

NOTE:
2 CLAMPING BARS CB-01-H (#28596) PER POSTS P1-P4
4 CLAMPING BARS CB-03-A (#19447) PER POSTS P1-P4
w/ 1/2"ø-13 UNC S.S. BOLT x 1" LG. "FB1", 1 1/16" O.D. x 17/32" I.D. x 3/32" THK. ALUM WASHER "FW1" (#15280 & # 19404) (16 PER POST)

NOTE:
4 CLAMPING BARS CB-03-A (#19447) PER POSTS P5-P7
w/ 1/2"ø-13 UNC S.S. BOLT x 1" LG. "FB1", 1 1/16" O.D. x 17/32" I.D. x 3/32" THK. ALUM WASHER "FW1" (#15280 & # 19404) (8 PER POST)

APPROACH POST DETAIL CHART FOR BRIDGE 41

POST No.	QTY.	OFFSET BLOCK MTG. DIMENSIONS A	B	C	D	E	F (0.C.)	BEV X
P1L	1	1 7/8"	1'-1 3/8"	2'-6 15/16"	11/16"	1 3/16	3'-4 7/8"	1 3/16
P2L	1	1 7/8"	11 11/16"	2'-4 1/2"	11/16"	1 3/16	3'-2 3/4"	1 3/16
P3L	1	1 7/8"	10"	2'-2 1/8"	11/16"	1 3/16	3'-0 11/16"	1 3/16
P4L	1	1 7/8"	8 5/16"	1'-11 3/4"	11/16"	1 3/16	2'-10 9/16"	1 3/16
P5L	1	2 3/16"	1'-4 11/16"		3/8"	1 13/16"	2'-4 1/16"	5/8
P6L	1	2 3/16"	1'-3 3/4"		3/8"	1 13/16"	2'-3 9/16"	5/8
P7L	1	2 3/16"	1'-2 13/16"		7/16"	1 3/4"	2'-3"	3/4
P8L	1	2 3/16"	1'-2 13/16"		7/16"	1 3/4"	2'-3"	3/4
P9L	1	1 7/8"	1'-1 5/16"	2'-2 5/16"	5/8"	1 1/4"	3'-4 1/2"	1 1/16
P10L	1	1 7/8"	11 11/16"	2'-0 9/16"	5/8"	1 1/4"	3'-2 9/16"	1 1/16
P11L	1	1 7/8"	10 1/16"	1'-10 7/8"	5/8"	1 1/4"	3'-0 9/16"	1 1/16
P12L	1	1 7/8"	8 3/8"	1'-9 1/8"	5/8"	1 1/4"	2'-10 9/16"	1 1/16
P13L	1	2 3/16"	1'-2 7/8"		5/16"	1 7/8"	2'-4 1/16"	1/2
P14L	1	2 3/16"	1'-2 3/4"		5/16"	1 7/8"	2'-3 5/8"	1/2
P15L	5	2 1/4"	1'-2 3/4"		7/16"	1 3/4"	2'-3"	3/4

APPROACH POST DETAIL CHART FOR BRIDGE 41

POST No.	QTY.	OFFSET BLOCK MTG. DIMENSIONS A	B	C	D	E	F (0.C.)	BEV X
P1R	1	1 15/16"	1'-0 13/16"	2'-6 1/16"	3/4"	1 3/16"	4'-0 5/8"	1 1/4
P2R	1	1 15/16"	11 3/8"	2'-3 7/8"	3/4"	1 3/16"	3'-9 9/16"	1 1/4
P3R	1	1 15/16"	9 15/16"	2'-1 3/4"	3/4"	1 3/16"	3'-6 1/2"	1 1/4
P4R	1	1 15/16"	8 1/2"	1'-11 5/8"	3/4"	1 3/16"	3'-3 7/16"	1 1/4
P5R	1	2 1/4"	1'-4 3/8"		1/2"	1 3/4"	2'-7 1/8"	3/4
P6R	1	2 1/4"	1'-3 7/16"		1/2"	1 3/4"	2'-4 15/16"	3/4
P7R	6	2 3/16"	1'-2 11/16"		5/16"	1 7/8"	2'-3"	3/4
P8R	1	1 15/16"	1'-1 1/2"	2'-2 7/16"	3/4"	1 3/16"	3'-4 5/8"	1 1/4
P9R	1	1 15/16"	11 15/16"	2'-0 13/16"	3/4"	1 3/16"	3'-2 5/8"	1 1/4
P10R	1	1 15/16"	10 5/16"	1'-11 3/16"	3/4"	1 3/16"	3'-0 9/16"	1 1/4
P11R	1	1 15/16"	8 3/4"	1'-9 1/2"	3/4"	1 3/16"	2'-10 9/16"	1 1/4
P12R	1	2 1/4"	1'-2 7/8"		1/2"	1 3/4"	2'-3 5/8"	3/4
P13R	1	2 1/4"	1'-2 13/16"		1/2"	1 3/4"	2'-3"	3/4
P14R	4	2 1/8"	1'-2 5/8"		5/16"	1 7/8"	2'-3"	3/4

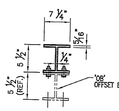

TYP. SECT. POST & OFFSET BLOCK

ANODIZED (SEE NOTES ON LB1)

RECEIVED JUL 09 2008

CK'D BY CWC DK'D BY CWC

PROJECT No. BRZ 1441(19) C/2

RESUBMIT ____ APPROVED ____

BY DATE

REV.	DESCRIPTION	BY	DATE

ITEM No: 900.640

APPROVED: ____ REQ'D APPROVAL ____ DRAWING ____

L.B. FOSTER COMPANY
1016 GREENTREE ROAD
PITTSBURGH, PENNSYLVANIA 15220

FOR: A. D. ROSSI CORPORATION
VERMONT AGENCY OF TRANSPORTATION
TOWN OF POWNAL, COUNTY OF BENNINGTON
BRIDGE RAILING FOR BRIDGE #41, TH 24, CL3 (LOCAL)
3L ALUMINUM APPROACH RAIL POST DETAILS

MADE CMS DATE 06/11/08 JOB No. ARD495 CUST. No.
CHECK BJJ DATE 06/19/08 DRAWING LB12 REV. No.

RECEIVED
CK'D BY _____ CK'D BY CMC
JUL 09 2008
RESUBMIT _____ APPROVED
BY _____
DATE _____

OFFSET BLOCK CHART FOR BRIDGE 41 NW & SE APPROACHES POSTS P1L – P4L, P8L – P11L

POST No.	OFFSET BLOCK	QTY.	OFFSET BLOCK ~ POST MTG. DIMENSIONS A	B	C	D	E	F (O.C.)	G	BEV X
P1L	OB1L	1	2'-9 7/8"	2'-6 15/16"	1'-1 3/8"	1 7/8"	11/16"	2'-9 1/2"	1 3/16"	1 3/16
P2L	OB2L	1	2'-7 1/2"	2'-4 1/2"	11 11/16"	1 7/8"	11/16"	2'-7 1/8"	1 3/16"	1 3/16
P3L	OB3L	1	2'-5 1/8"	2'-2 1/8"	10"	1 7/8"	11/16"	2'-4 3/4"	1 3/16"	1 3/16
P4L	OB4L	1	2'-2 3/4"	1'-11 3/4"	8 5/16"	1 7/8"	11/16"	2'-2 3/8"	1 3/16"	1 3/16
P9L	OB9L	1	2'-5 1/4"	2'-2 5/16"	1'-1 5/16"	1 7/8"	5/8"	2'-4 15/16"	1 1/4"	1 1/16
P10L	OB10L	1	2'-3 1/2"	2'-0 9/16"	11 11/16"	1 7/8"	5/8"	2'-3 3/16"	1 1/4"	1 1/16
P11L	OB11L	1	2'-1 13/16"	1'-10 7/8"	10 1/16"	1 7/8"	5/8"	2'-1 1/2"	1 1/4"	1 1/16
P12L	OB12L	1	2'-0 1/16"	1'-9 1/8"	8 3/8"	1 7/8"	5/8"	1'-11 3/4"	1 1/4"	1 1/16

OFFSET BLOCK ~ RAIL MTG. DIMENSIONS

POST No.	OFFSET BLOCK	H	J	K	L	M	N
P1L	OB1L	1 1/16"	1'-0 3/8"	2'-6"	13/16"	11 15/16"	2'-5 7/16"
P2L	OB2L	1 1/16"	10 11/16"	2'-3 5/8"	13/16"	10 1/4"	2'-3 1/16"
P3L	OB3L	1 1/16"	9"	2'-1 3/16"	13/16"	8 9/16"	2'-0 11/16"
P4L	OB4L	1 1/16"	7 5/16"	1'-10 13/16"	13/16"	6 7/8"	1'-10 1/4"
P9L	OB9L	1 1/16"	1'-0 3/8"	2'-1 3/8"	7/8"	1'-0"	2'-0 15/16"
P10L	OB10L	1 1/16"	10 3/4"	1'-11 5/8"	7/8"	10 5/16"	1'-11 1/4"
P11L	OB11L	1 1/16"	9 1/16"	1'-9 15/16"	7/8"	8 11/16"	1'-9 1/2"
P12L	OB12L	1 1/16"	7 7/16"	1'-8 3/16"	7/8"	7"	1'-7 13/16"

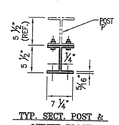

TYP. SECT. POST & OFFSET BLOCK

OFFSET BLOCK CHART FOR BRIDGE 41 SW & NE APPROACHES POSTS P1R – P4R, P8R – P11R

POST No.	OFFSET BLOCK	QTY.	OFFSET BLOCK ~ POST MTG. DIMENSIONS A	B	C	D	E	F (O.C.)	G	BEV X
P1R	OB1R	1	2'-9 1/8"	2'-6 1/16"	1'-0 13/16"	1 15/16"	3/4"	2'-8 3/4"	1 3/16"	1 1/4
P2R	OB2R	1	2'-6 15/16"	2'-3 7/8"	11 3/8"	1 15/16"	3/4"	2'-6 9/16"	1 3/16"	1 1/4
P3R	OB3R	1	2'-4 3/4"	2'-1 3/4"	9 15/16"	1 15/16"	3/4"	2'-4 3/8"	1 3/16"	1 1/4
P4R	OB4R	1	2'-2 5/8"	1'-11 5/8"	8 1/2"	1 15/16"	3/4"	2'-2 1/4"	1 3/16"	1 1/4
P8R	OB8R	1	2'-5 5/16"	2'-2 7/16"	1'-1 1/2"	1 15/16"	3/4"	2'-4 15/16"	1 3/16"	1 1/4
P9R	OB9R	1	2'-3 9/16"	2'-0 13/16"	11 15/16"	1 15/16"	3/4"	2'-3 3/16"	1 3/16"	1 1/4
P10R	OB10R	1	2'-1 7/8"	1'-11 3/16"	10 5/16"	1 15/16"	3/4"	2'-1 1/2"	1 3/16"	1 1/4
P11R	OB11R	1	2'-0 1/8"	1'-9 1/2"	8 3/4"	1 15/16"	3/4"	1'-11 3/4"	1 3/16"	1 1/4

OFFSET BLOCK ~ RAIL MTG. DIMENSIONS

POST No.	OFFSET BLOCK	H	J	K	L	M	N
P1R	OB1R	1 1/16"	11 13/16"	2'-5 1/16"	13/16"	11 7/16"	2'-4 9/16"
P2R	OB2R	1 1/16"	10 3/8"	2'-2 15/16"	13/16"	10"	2'-2 7/16"
P3R	OB3R	1 1/16"	8 15/16"	2'-0 13/16"	13/16"	8 1/2"	2'-0 1/4"
P4R	OB4R	1 1/16"	7 1/2"	1'-10 5/8"	13/16"	7 1/16"	1'-10 1/8"
P8R	OB8R	1 1/16"	1'-0 1/2"	2'-1 7/16"	13/16"	1'-0"	2'-1"
P9R	OB9R	1 1/16"	10 7/8"	1'-11 13/16"	13/16"	10 7/16"	1'-11 3/8"
P10R	OB10R	1 1/16"	9 5/16"	1'-10 1/8"	13/16"	8 7/8"	1'-9 11/16"
P11R	OB11R	1 1/16"	7 3/4"	1'-8 1/2"	13/16"	7 5/16"	1'-8 1/16"

ANODIZED
(SEE NOTES ON LB1)

NOTE:
2 CLAMPING BARS CB-01-H (#28596) PER POSTS P1- P4, P8 - P11
4 CLAMPING BARS CB-03-A (#19447) PER POSTS P1- P4, P8 - P11
w/ 1/2"ø-13 UNC S.S. BOLT x 1" LG. 'FB1', 1 1/16" O.D. x 17/32" I.D. x 3/32" THK. ALUM WASHER 'FW1' (#15280 & #19404) (16 PER POST)

NOTE:
4 CLAMPING BARS CB-03-A (#19447) PER POSTS P1 - P4, P8 - P11
w/ 1/2"ø-13 UNC S.S. BOLT x 1" LG. 'FB1', 1 1/16" O.D. x 17/32" I.D. x 3/32" THK. ALUM WASHER 'FW1' (#15280 & #19404) (8 PER POST)

REV.	DESCRIPTION	BY	DATE

PROJECT No. BRZ 1441(19) C/2 ITEM No: 900.640

APPROVED: _____ REC'D APPROVAL ____ DRAWING ____

L.B. FOSTER COMPANY
1016 GREENTREE ROAD
PITTSBURGH, PENNSYLVANIA 15220

FOR: A. D. ROSSI CORPORATION
VERMONT AGENCY OF TRANSPORTATION
TOWN OF POWNAL COUNTY OF BENNINGTON
BRIDGE RAILING FOR BRIDGE #41, TH 24, CL3 (LOCAL)
OFFSET BLOCK DETAILS

MADE CMS DATE 06/11/08 JOB No. AR0495 CUST. No.
CHECK BLJ DATE 08/19/08 DRAWING LB13 REV. No.

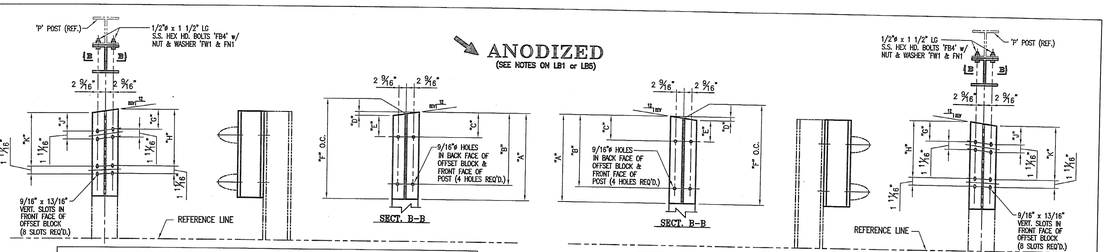

ANODIZED
(SEE NOTES ON LB1 or LB5)

OFFSET BLOCK CHART FOR BRIDGE 41 SE & NW APPROACHES
POSTS P5L – P7L, P12L – P15L

POST No.	OFFSET BLOCK	QTY.	OFFSET BLOCK ~ POST MTG. DIMENSIONS A	B	C	D	E	F (O.C.)	BEV X
P5L	OB5L	1	1'-7 5/8"	1'-4 11/16"	2 3/16"	3/8"	1 13/16"	1'-7 7/16"	5/8
P6L	OB6L	1	1'-6 7/16"	1'-3 3/4"	2 3/16"	3/8"	1 13/16"	1'-6 7/16"	5/8
P7L	OB7L	1	1'-5 11/16"	1'-2 13/16"	2 3/16"	7/16"	1 3/4"	1'-5 1/2"	3/4
P8L	OB8L	1	1'-5 3/4"	1'-2 13/16"	2 3/16"	7/16"	1 3/4"	1'-5 1/2"	3/4
P13L	OB13L	1	1'-5 11/16"	1'-2 7/8"	2 3/16"	5/16"	1 7/8"	1'-5 11/16"	1/2
P14L	OB14L	1	1'-5 3/4"	1'-2 3/4"	2 3/16"	5/16"	1 7/8"	1'-5 5/8"	1/2
P15L	OB15L	5	1'-5 3/4"	1'-2 3/4"	2 1/4"	7/16"	1 3/4"	1'-5 1/2"	3/4

POST No.	OFFSET BLOCK	OFFSET BLOCK ~ RAIL MTG. DIMENSIONS G	H	J	K
P5L	OB5L	1 3/16"	1'-3 3/4"	1 1/8"	1'-3 9/16"
P6L	OB6L	1 3/16"	1'-2 13/16"	1 1/16"	1'-2 5/8"
P7L	OB7L	1 3/16"	1'-1 7/8"	1 1/16"	1'-1 9/16"
P8L	OB8L	1 1/4"	1'-1 3/4"	1 1/16"	1'-1 5/8"
P13L	OB13L	1 3/16"	1'-1 7/8"	1 1/8"	1'-1 13/16"
P14L	OB14L	1 3/16"	1'-1 13/16"	1 1/8"	1'-1 11/16"
P15L	OB15L	1 1/4"	1'-1 3/4"	1 1/16"	1'-1 5/8"

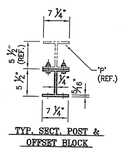

TYP. SECT. POST & OFFSET BLOCK

OFFSET BLOCK CHART FOR BRIDGE 41 SE & NE APPROACHES
POSTS P5R – P7R, P12R – P14R

POST No.	OFFSET BLOCK	QTY.	OFFSET BLOCK ~ POST MTG. DIMENSIONS A	B	C	D	E	F (O.C.)	BEV X
P5R	OB5R	1	1'-7 9/16"	1'-4 3/8"	2 1/4"	1/2"	1 3/4"	1'-7 5/16"	3/4
P6R	OB6R	1	1'-6 11/16"	1'-3 7/16"	2 1/4"	1/2"	1 3/4"	1'-6 7/16"	3/4
P7R	OB7R	6	1'-5 11/16"	1'-2 11/16"	2 3/16"	5/16"	1 7/8"	1'-5 1/2"	3/4
P12R	OB12R	1	1'-5 15/16"	1'-2 7/8"	2 1/4"	1/2"	1 3/4"	1'-5 11/16"	3/4
P13R	OB13R	1	1'-5 7/8"	1'-2 13/16"	2 1/4"	1/2"	1 3/4"	1'-5 5/8"	3/4
P14R	OB14R	4	1'-5 5/8"	1'-2 5/8"	2 1/8"	5/16"	1 7/8"	1'-5 1/2"	3/4

POST No.	OFFSET BLOCK	OFFSET BLOCK ~ RAIL MTG. DIMENSIONS G	H	J	K
P5R	OB5R	1 1/4"	1'-3 7/16"	1 1/16"	1'-3 3/16"
P6R	OB6R	1 1/4"	1'-2 7/16"	1 1/16"	1'-2 1/4"
P7R	OB7R	1 3/16"	1'-1 3/4"	1 1/8"	1'-1 5/8"
P12R	OB12R	1 1/4"	1'-1 7/8"	1 1/16"	1'-1 3/4"
P13R	OB13R	1 1/4"	1'-1 13/16"	1 1/16"	1'-1 5/8"
P14R	OB14R	1 3/16"	1'-1 11/16"	1 1/8"	1'-1 5/8"

NOTE:
4 CLAMPING BARS CB-Q3-A (#19447) PER POSTS P5 – P7, P12 – P14, P15 w/ 1/2"ø-13 UNC S.S. BOLT x 1" LG. 'FB1', 1 1/16" O.D. x 17/32" I.D. x 3/32" THK. ALUM WASHER 'FW1' (#15280 & #19404) (8 PER POST)

RECEIVED
JUL 09 2008
CK'D BY CM OK'D BY CWE
RESUBMIT: _____ APPROVED ✓
BY DATE

PROJECT No. BRZ 1441(19) C/2 ITEM No: 900.640
APPROVED: _____ REC'D APPROVAL _____ DRAWING _____

L.B. FOSTER COMPANY
1016 GREENTREE ROAD
PITTSBURGH, PENNSYLVANIA 15220

FOR: A. D. ROSSI CORPORATION
VERMONT AGENCY OF TRANSPORTATION
TOWN OF POWNAL, COUNTY OF BENNINGTON
BRIDGE RAILING FOR BRIDGE #41, TH 24, CL3 (LOCAL)
OFFSET BLOCK DETAILS

MADE CMS DATE 06/12/08 JOB No. AR0495 CUST. No.
CHECK BLJ DATE 06/19/08 DRAWING LB14 EST. No.

REV.	DESCRIPTION	BY	DATE

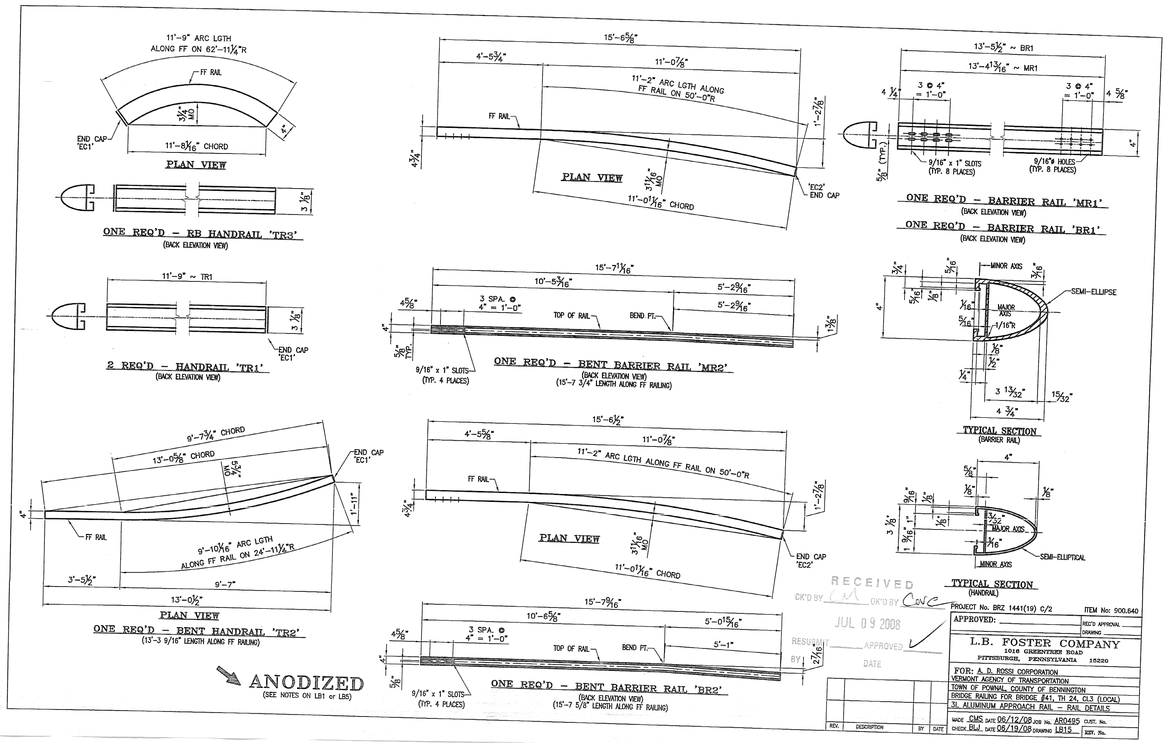

RECEIVED
CK'D BY CM OK'D BY CWC
JUL 09 2008
RESUBMIT APPROVED
BY DATE

PROJECT No. BRZ 1441(19) C/2 ITEM No: 900.640

APPROVED: REC'D APPROVAL DRAWING

L.B. FOSTER COMPANY
1016 GREENTREE ROAD
PITTSBURGH, PENNSYLVANIA 15220

FOR: A. D. ROSSI CORPORATION
VERMONT AGENCY OF TRANSPORTATION
TOWN OF POWNAL, COUNTY OF BENNINGTON
BRIDGE RAILING FOR BRIDGE #41, TH 24, CL3 (LOCAL)
3L ALUMINUM APPROACH RAIL – RAIL DETAILS

MADE CMS DATE 06/12/08 JOB No. AR0495 CUST. No.
CHECK BLJ DATE 06/19/08 DRAWING LB15 REV. No.

REV.	DESCRIPTION	BY	DATE

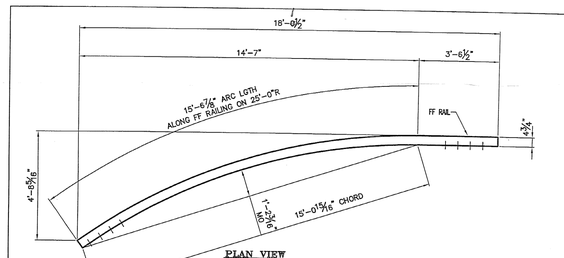

PLAN VIEW

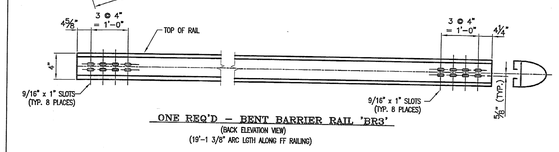

ONE REQ'D – BENT BARRIER RAIL 'BR3'
(BACK ELEVATION VIEW)
(19'-1 3/8" ARC LGTH ALONG FF RAILING)

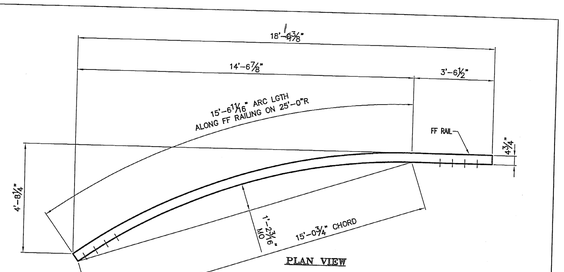

PLAN VIEW

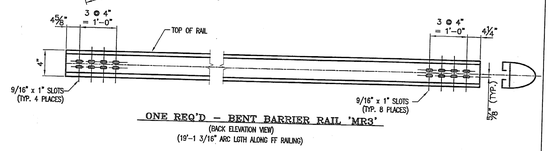

ONE REQ'D – BENT BARRIER RAIL 'MR3'
(BACK ELEVATION VIEW)
(19'-1 3/16" ARC LGTH ALONG FF RAILING)

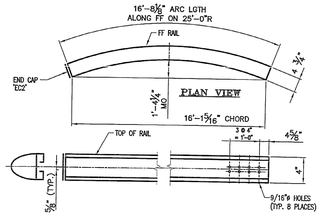

ONE REQ'D – RB BARRIER RAIL 'MR5'
(BACK ELEVATION VIEW)

ONE REQ'D – RB BARRIER RAIL 'BR5'
(BACK ELEVATION VIEW)

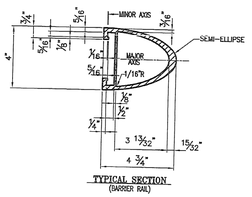

TYPICAL SECTION
(BARRIER RAIL)

RECEIVED
CK'D BY CWC CK'D BY CWC
JUL 09 2008
RESUBMIT _____ APPROVED AS NOTED
BY DATE

ANODIZED
(SEE NOTES ON LB1 or LB5)

REV.	DESCRIPTION	BY	DATE

PROJECT No. BR2 1441(19) C/2 ITEM No: 900.640
APPROVED: _____ REG'D APPROVAL _____
DRAWING _____

L.B. FOSTER COMPANY
1016 GREENTREE ROAD
PITTSBURGH, PENNSYLVANIA 15220

FOR: A. D. ROSS CORPORATION
VERMONT AGENCY OF TRANSPORTATION
TOWN OF POWNAL, COUNTY OF BENNINGTON
BRIDGE RAILING FOR BRIDGE #41, TH 24, CL3 (LOCAL)
3L ALUMINUM APPROACH RAIL – RAIL DETAILS

MADE CMS DATE 05/12/08 JOB No. AR0495 CUST. No.
CHECK BLL DATE 05/19/08 DRAWING LB15A REV. No.

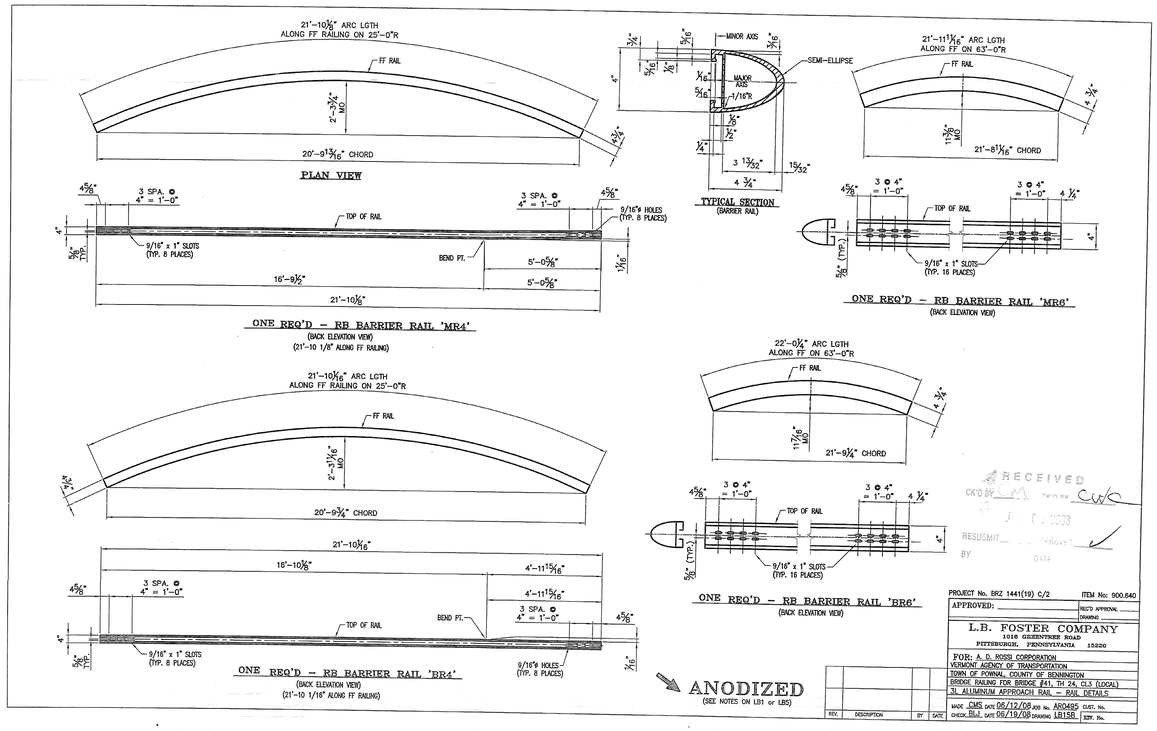

RECEIVED
CK'D BY CWC
RESUBMIT
BY
DATE

PROJECT No. BRZ 1441(19) C/2 ITEM No: 900.640

APPROVED: _____ REQ'D APPROVAL _____ DRAWING _____

L.B. FOSTER COMPANY
1016 GREENTREE ROAD
PITTSBURGH, PENNSYLVANIA 15220

FOR: A. D. ROSSI CORPORATION
VERMONT AGENCY OF TRANSPORTATION
TOWN OF POWNAL, COUNTY OF BENNINGTON
BRIDGE RAILING FOR BRIDGE #41, TH 24, CL3 (LOCAL)
3L ALUMINUM APPROACH RAIL – RAIL DETAILS

MADE CMS DATE 06/12/08 JOB No. AR0495 CUST. No.
CHECK BLJ DATE 06/19/08 DRAWING LB15B REV. No.

REV.	DESCRIPTION	BY	DATE

PLAN VIEW

PLAN VIEW

ONE REQ'D. ~ COMPOUND RB RAIL 'MR7'
(BACK ELEVATION VIEW)
ONE REQ'D. ~ COMPOUND RB RAIL 'BR7'
(BACK ELEVATION VIEW)

ONE REQ'D. ~ COMPOUND RB RAIL 'MR9'
(BACK ELEVATION VIEW)
(20'-0" ALONG FF OF RAILING)
ONE REQ'D. ~ COMPOUND RB RAIL 'BR9'
(BACK ELEVATION VIEW)
(20'-0" ALONG FF OF RAILING)

TYPICAL SECTION
(BARRIER RAIL)

ONE REQ'D – BARRIER RAIL 'MR8'
(BACK ELEVATION VIEW)
ONE REQ'D – BARRIER RAIL 'BR8'
(BACK ELEVATION VIEW)

RECEIVED
ORD BY CM ORD BY CWO
JUL 09 2008
RESUBMIT ____ APPROVED AS NOTED
BY DATE

ANODIZED
(SEE NOTES ON LB1 or LB5)

REV.	DESCRIPTION	BY	DATE

PROJECT No. BRZ 1441(19) C/2 ITEM No: 900.640
APPROVED: ____ REG'D APPROVAL ____
DRAWING

L.B. FOSTER COMPANY
1016 GREENTREE ROAD
PITTSBURGH, PENNSYLVANIA 15220

FOR: A. D. ROSSI CORPORATION
VERMONT AGENCY OF TRANSPORTATION
TOWN OF POWNAL, COUNTY OF BENNINGTON
BRIDGE RAILING FOR BRIDGE #41, TH 24, 0L3 (LOCAL)
3L ALUMINUM APPROACH RAIL – RAIL DETAILS

MADE CMS DATE 06/12/08 JOB No. AR0495 CUST. No.
CHECK RMJ DATE 06/19/08 DRAWING LB15C KEY No.

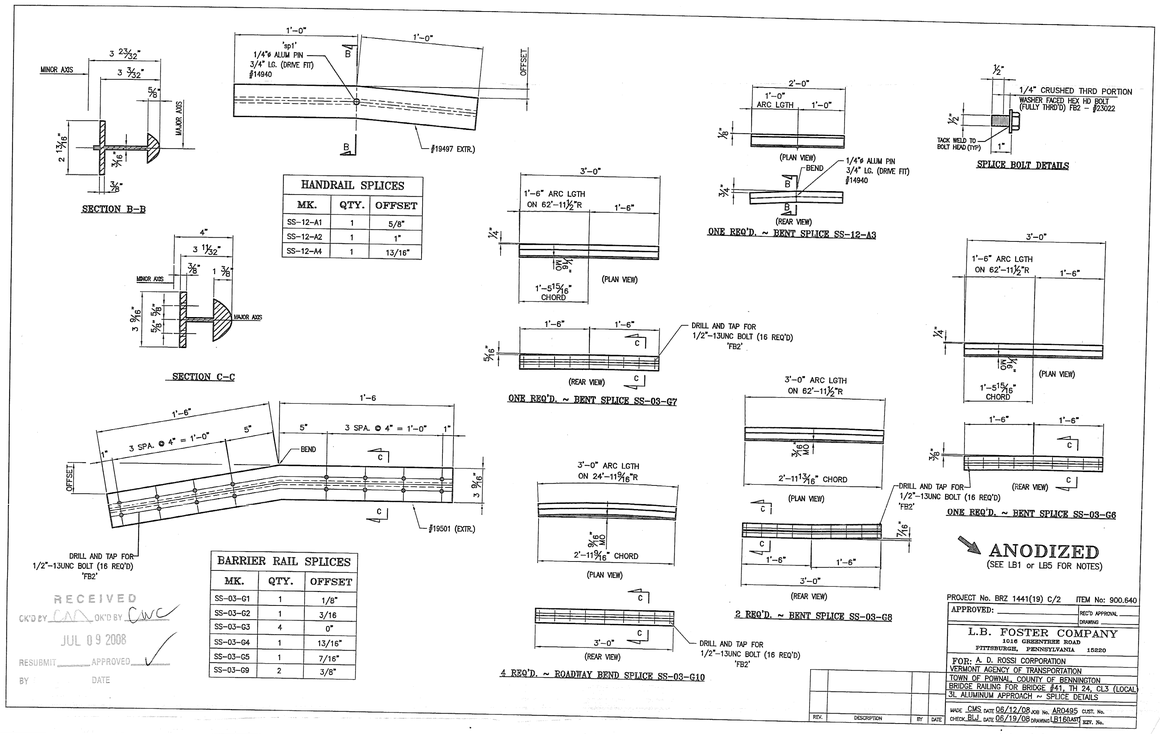

HANDRAIL SPLICES		
MK.	QTY.	OFFSET
SS-12-A1	1	5/8"
SS-12-A2	1	1"
SS-12-A4	1	13/16"

BARRIER RAIL SPLICES		
MK.	QTY.	OFFSET
SS-03-G1	1	1/8"
SS-03-G2	1	3/16
SS-03-G3	4	0"
SS-03-G4	1	13/16"
SS-03-G5	1	7/16"
SS-03-G9	2	3/8"

ONE REQ'D. ~ BENT SPLICE SS-03-G7

4 REQ'D. ~ ROADWAY BEND SPLICE SS-03-G10

ONE REQ'D. ~ BENT SPLICE SS-12-A3

2 REQ'D. ~ BENT SPLICE SS-03-G8

SPLICE BOLT DETAILS

ONE REQ'D. ~ BENT SPLICE SS-03-G6

ANODIZED
(SEE LB1 or LB5 FOR NOTES)

RECEIVED
CK'D BY CAN OK'D BY CWC
JUL 09 2008
RESUBMIT ____ APPROVED ✓
BY DATE

PROJECT No. BRZ 1441(19) C/2 ITEM No: 900.640
APPROVED: ____ REC'D APPROVAL ____ DRAWING ____

L.B. FOSTER COMPANY
1016 GREENTREE ROAD
PITTSBURGH, PENNSYLVANIA 15220

FOR: A. D. ROSSI CORPORATION
VERMONT AGENCY OF TRANSPORTATION
TOWN OF POWNAL, COUNTY OF BENNINGTON
BRIDGE RAILING FOR BRIDGE #41, TH 24, CL3 (LOCAL)
3L ALUMINUM APPROACH ~ SPLICE DETAILS

MADE CMS DATE 06/12/08 JOB No. AR0495 CUST. No.
CHECK BLJ DATE 06/19/08 DRAWING LB160A01 REV. No.

REV.	DESCRIPTION	BY	DATE