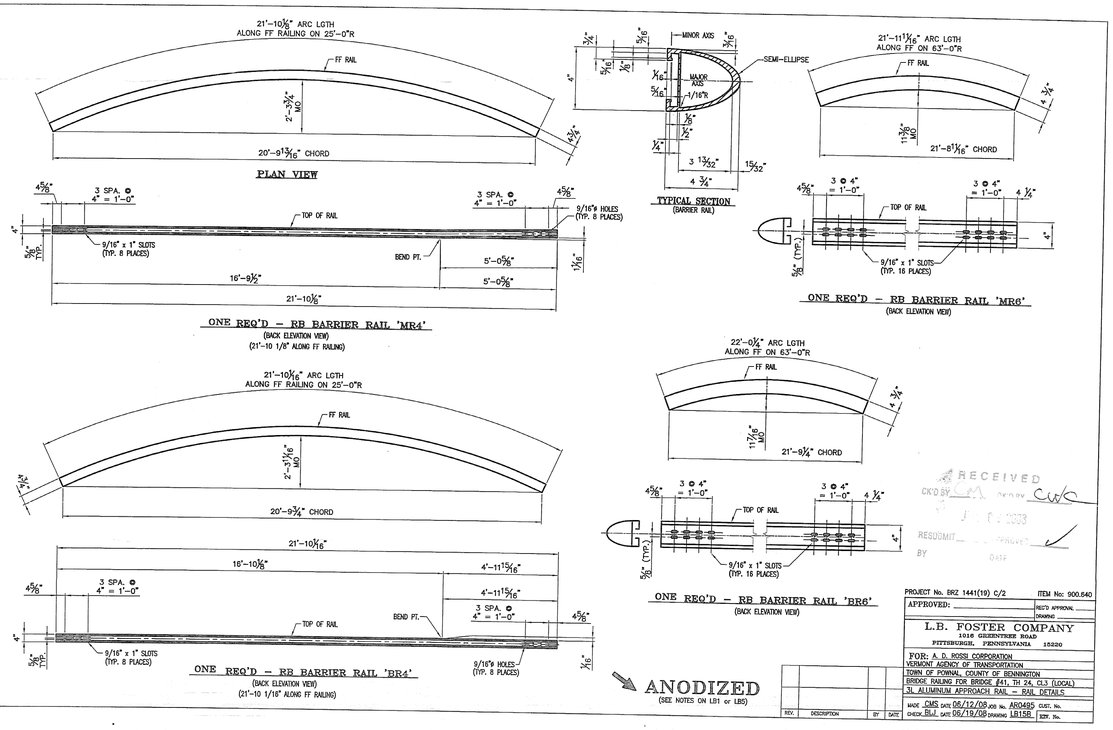
21'-10 5/8" ARC LGTH
ALONG FF RAILING ON 25'-0"R
FF RAIL
2'-3 3/4" MIN.
20'-9 13/16" CHORD
PLAN VIEW
MINOR AXIS
SEMI-ELLIPSE
MAJOR AXIS
1/16"R
4 3/4"
TYPICAL SECTION
(BARRIER RAIL)
21'-11 1/16" ARC LGTH
ALONG FF ON 63'-0"R
21'-8 1/16" CHORD
3 SPA. @ 4" = 1'-0"
TOP OF RAIL
9/16" x 1" SLOTS
(TYP. 8 PLACES)
9/16"ø HOLES
(TYP. 8 PLACES)
BEND PT.
5'-0 5/8"
16'-9 1/2"
21'-10 5/8"
ONE REQ'D – RB BARRIER RAIL 'MR4'
(BACK ELEVATION VIEW)
(21'-10 1/8" ALONG FF RAILING)
9/16" x 1" SLOTS
(TYP. 16 PLACES)
ONE REQ'D – RB BARRIER RAIL 'MR6'
(BACK ELEVATION VIEW)
22'-0 1/4" ARC LGTH
ALONG FF ON 63'-0"R
21'-9 1/4" CHORD
21'-10 1/16" ARC LGTH
ALONG FF RAILING ON 25'-0"R
2'-3 1/16" MIN.
20'-9 3/4" CHORD
16'-10 5/8"
4'-11 15/16"
9/16"ø HOLES
(TYP. 8 PLACES)
ONE REQ'D – RB BARRIER RAIL 'BR4'
(BACK ELEVATION VIEW)
(21'-10 1/16" ALONG FF RAILING)
ONE REQ'D – RB BARRIER RAIL 'BR6'
(BACK ELEVATION VIEW)
ANODIZED
(SEE NOTES ON LB1 or LB5)
RECEIVED
CK'D BY
RESUBMIT
BY
DATE
PROJECT No. BRZ 1441(19) C/2
ITEM No: 900.640
APPROVED:
REC'D APPROVAL
DRAWING
L.B. FOSTER COMPANY
1016 GREENTREE ROAD
PITTSBURGH, PENNSYLVANIA 15220
FOR: A. D. ROSSI CORPORATION
VERMONT AGENCY OF TRANSPORTATION
TOWN OF POWNAL, COUNTY OF BENNINGTON
BRIDGE RAILING FOR BRIDGE #41, TH 24, CL3 (LOCAL)
3L ALUMINUM APPROACH RAIL – RAIL DETAILS
MADE CMS DATE 06/12/09 JOB No. AR0495 CUST. No.
CHECK BJL DATE 06/18/09 DRAWING LB15B REV. No.
REV. DESCRIPTION BY DATE