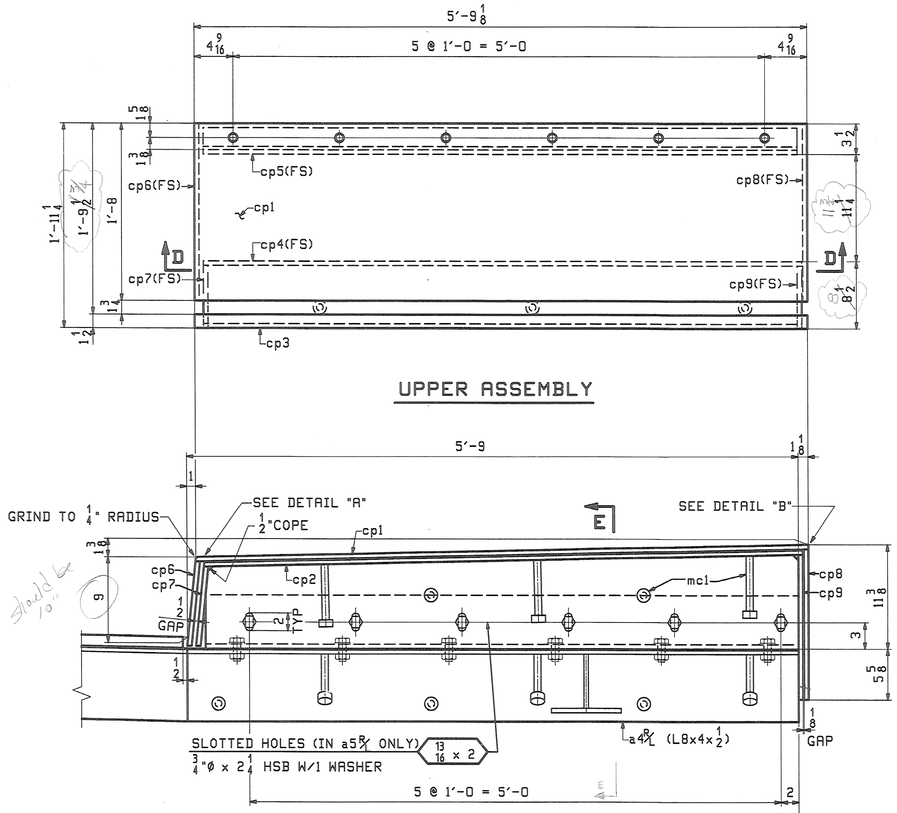

UPPER ASSEMBLY

SECTION D-D

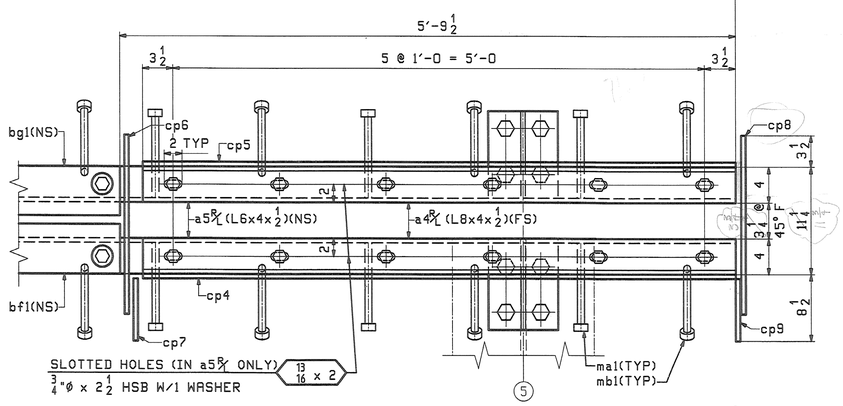

LOWER ASSEMBLY

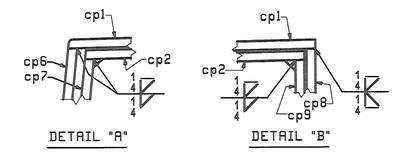

DETAIL "A" DETAIL "B"

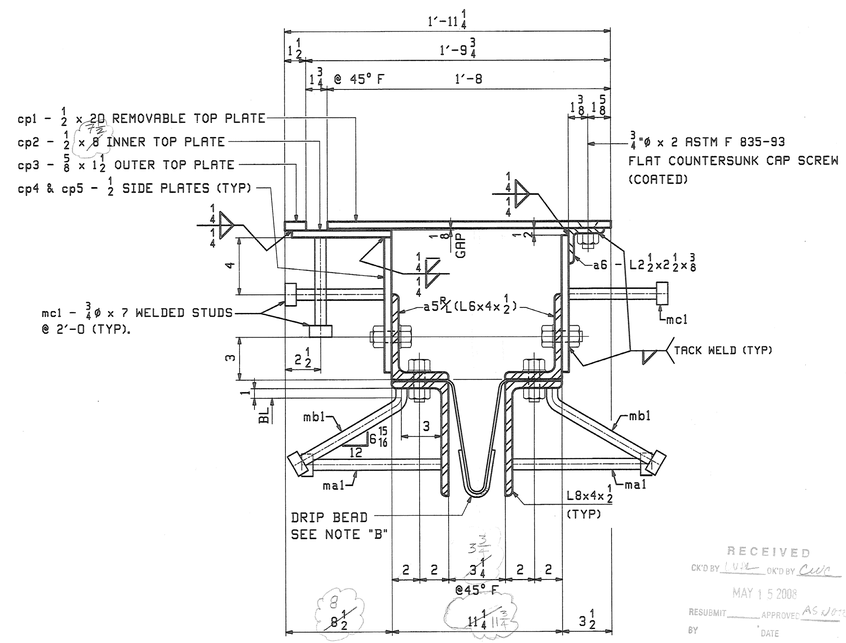

SECTION E

NOTE "B"
A DRIP BEAD OF 1/4 x 7 STRIP OF PREFORMED MATERIAL SHALL BE CEMENTED TO THE BOTTOM OF THE FABRIC TROUGH USING AN ADHESIVE APPROVED BY THE MANUFACTURER. THE DRIP BEAD SHALL BE APPLIED 1" FROM THE DOWNSPOUT END OF THE TROUGH.

ABM INFO PAGE	ABM INFO LINE	SHIP MARK	QTY	MARK	MATERIAL	LENGTH FT	LENGTH INCHES	REMARKS	WT	PROCUREMENT NOTES
		AP1	5		ANCHORAGE				13	
4	V		5	pf1	PL 1/2x8	0	9			
5	C		20	ma1	3/4 ø STUD	0	10	(A108) STUDS		
		TS1	20		THREADED RODS				4	
5	U		20		1 ø ROD	0	6	THREAD FULL LENGTH		
5	V		40	w1	PL 3/8x3	0	3			
5	W		40		1 ø HHN			(A563)		
		TS2	20		THREADED RODS				5	
5	U		20		1 ø ROD	0	9 1/2	THREAD FULL LENGTH		
5	V		40	w1	PL 3/8x3	0	3			
5	W		40		1 ø HHN			(A563)		

JOB NO.: | DRAWING NO.: J1B | REV.:

ABM INFO PAGE	ABM INFO LINE	SHIP MARK	QTY	MARK	MATERIAL	LENGTH FT	LENGTH INCHES	REMARKS	WT	PROCUREMENT NOTES
		EJ1	1		EXPANSION JOINT				3520	
4	B		1	a1L	L 8x4x1/2	1	2 3/8			
4	B		1	a1R	L 8x4x1/2	1	2 3/8			
4	C		1	a2L	L 8x4x1/2	11	6 1/8			
4	C		1	a2R	L 8x4x1/2	11	6 1/8			
4	C		1	a3L	L 8x4x1/2	12	0			
4	C		1	a3R	L 8x4x1/2	12	0			
4	D		1	a4L	L 8x4x1/2	5	9			
4	D		1	a4R	L 8x4x1/2	5	9			
4	E		1	a5L	L 6x4x1/2	5	7			
4	E		1	a5R	L 6x4x1/2	5	7			
4	F		1	a6	L 2 1/2 x2 1/2 x 3/8	5	7			
4	G		1	ba1	BAR 1 1/4x5 1/2	1	2 3/8			
4	G		1	bb1	BAR 1 1/4x5 1/2	1	2 3/8			
4	H		1	bc1	BAR 1 1/4x5 1/2	11	6 1/8			
4	H		1	bd1	BAR 1 1/4x5 1/2	11	6 1/8			
4	H		1	bf1	BAR 1 1/4x5 1/2	11	11 1/2			
4	H		1	bg1	BAR 1 1/4x5 1/2	11	11 1/2			
4	J		1	cp1	PL 1/2x20	5	9 1/8	SLIPNOT OR EQUIV.		
4	M		1	cp2	PL 1/2x8	5	9 1/8			
4	Q		1	cp3	PL 5/8x1 1/2	5	9 1/8			
4	R		1	cp4	PL 1/2x9 3/4	6	0			
4	R		1	cp5	PL 1/2x9 7/8	6	0			
4	K		1	cp6	PL 1/2x20	0	9 5/8			
4	N		1	cp7	PL 1/2x8	0	9			
4	L		1	cp8	PL 1/2x20	1	4 1/2			
4	P		1	cp9	PL 1/2x7	1	3 7/8			
4	S		5	pa1	PL 1/2x8	0	11 1/2			
4	T		5	pb1	PL 1/2x6	0	11 1/2			
4	S		5	pc1	PL 1/2x8	0	10			
4	T		5	pd1	PL 1/2x6	0	10			
5	B		31	ma1	3/4 ø STUD	0	10	(A108) STUDS		
5	C		31	mb1	3/4 ø STUD	0	10	(A108) BENT STUDS		
5	D		9	mc1	3/4 ø STUD	0	7	(A108) STUDS		
5	E		1	md1	FABRIC DRAIN	31	2 1/2	3-PLY (1/8 x 33 1/8)		
5	F		2	mf1	TAPE 1/16x3	30	5 1/2	BUTYL RUBBER		
5	H		1		1/2 ø HSB	0	2	(A325-1) (GALV)		
5	J		2		1/2 ø HSW			(F436) (GALV)		
5	K		6		3/4 ø CAP SCREW	0	2	(F837) STAINLESS STEEL		
5	L		50		3/4 ø HSB	0	2 1/4	(A325-1) (GALV)		
5	M		10		3/4 ø HSB	0	2 1/2	(A325-1) (GALV)		
5	N		22		3/4 ø HSW			(F436) (GALV)		
5	R		6	sa1	L 4x4x3/8	0	11 3/4	SHIPPING DEVICE		
5	S		12		3/4 ø HSB	0	3 1/4	(A325-1) SHIPPING BOLTS		
5	T		12		3/4 ø HSW			(F436)		

JOB NO.: 367 | DRAWING NO.: J1B | REV.:

WORK THIS DWG WITH DWG J1AB

GALVANIZE ALL STEEL AFTER FABRICATION (EXCEPT AS NOTED)

REV.	DATE	REMARKS	DWN	CHK	APVL	SHOP
0					5-12-08	

MATERIAL: A709-36 | SURFACE PREP. & PAINT: | HOLES: 13/16"ø (UN) | SHOP BOLTS: AS NOTED

DESCRIPTION: EXPANSION JOINT (ABUT 2)

CASCO BAY STEEL STRUCTURES, INC.
75 SPRING HILL ROAD SACO, MAINE 04072
PHONE (207) 282-7360 FAX. (207) 282-1179
TENSOR 2776

STRUCTURE: TH24 over Hoosic River
BRIDGE NO. 41
POWNAL, VERMONT
COUNTY OF BENNINGTON

DRAWN: JTB | DATE: 04/29
CHKD: TM | DATE: 05/07

LOCATION: TOWN OF POWNAL | JOB NO. | DWG NO.
PROJ NO. BRZ 1441 (19) C/2 | 367 | J1B
CUSTOMER: VERMONT AGENCY OF TRANSPORTATION | REV.

RECEIVED
CK'D BY OK'D BY
MAY 15 2008
RESUBMIT APPROVED AS NOTED
BY DATE

ER Fri, May 9, 2008 07:58:21 AM /users/jake/2776/J1B ; Rev0