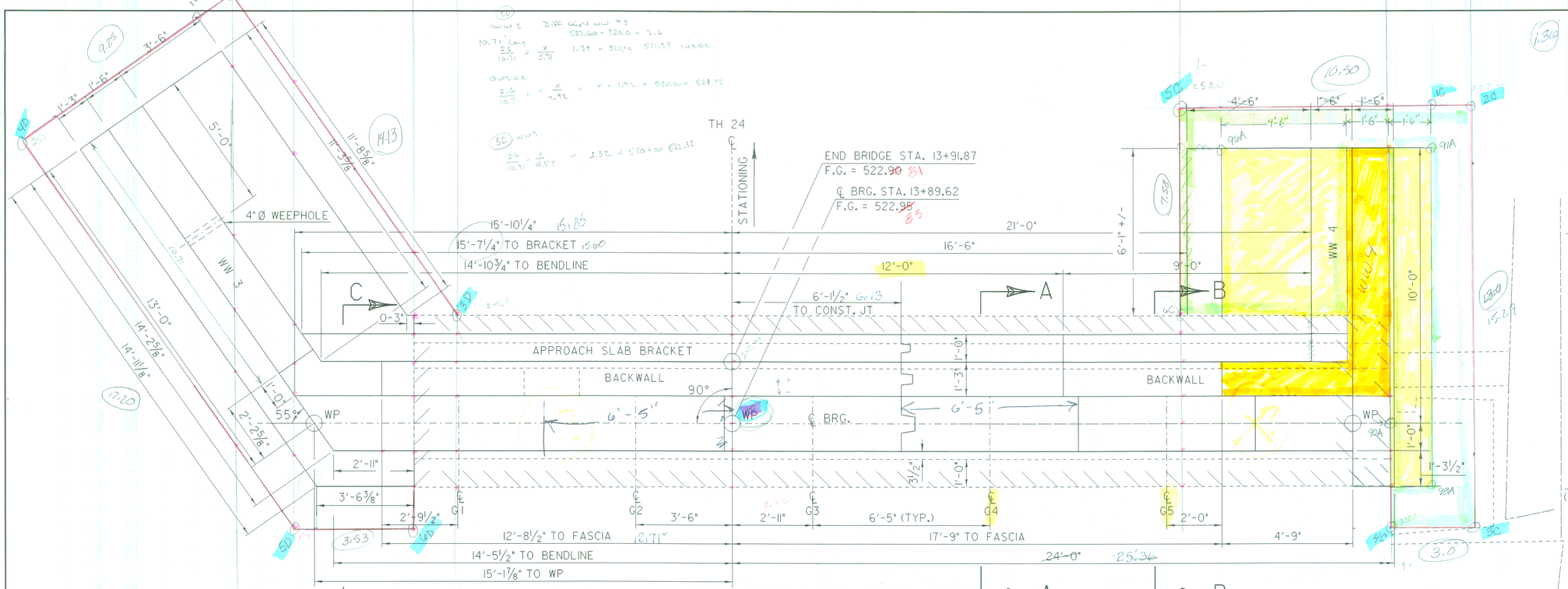

ABUTMENT NO. 2 PLAN

SCALE ½" = 1'-0
COPING NOT SHOWN

ABUTMENT NO. 2 ELEVATION

SCALE ½" = 1'-0

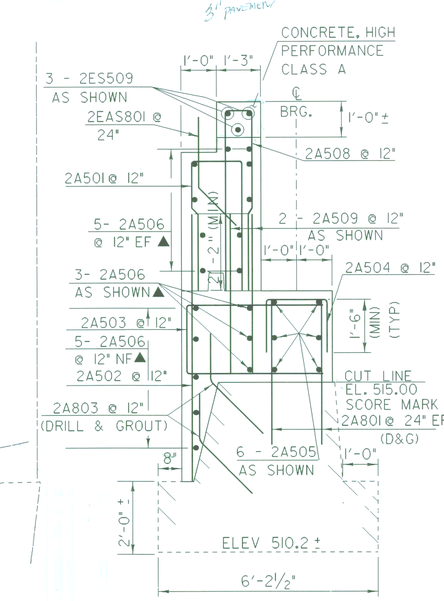

ABUTMENT NO. 2 (SECTION A-A)

SCALE ½" = 1'-0

SEE SHEET 56A FOR ABUTMENT NO. 2 SECTION B-B & C-C

EXISTING ABUTMENT

REMOVAL OF CONCRETE WALL & SLAB TO BE PAID AS SOLID ROCK EXCAVATION

NOTES:

1. NF = NEAR FACE
2. FF = FAR FACE
3. EF = EACH FACE
4. ▲ = CUT TO FIT IN FIELD
5. 3" CLR. UNLESS OTHERWISE SPECIFIED ON THE PLANS
6. SEE SHEET 56A AND 57 FOR FOOTING REINFORCING
7. SEE SHEETS 56 & 56A FOR SECTIONS D-D, E-E, F-F, G-G, H-H AND I-I

ABUTMENT NO. 2 PLAN & ELEVATION

PROJECT NAME: POWNAL	
PROJECT NUMBER: BRZ 1441(19) C/2	
FILE NAME: 87e045/str/se045sub.dgn	PLOT DATE: 29-FEB-2008
PROJECT LEADER: R. WHITCOMB	DRAWN BY: D. PETERSON
DESIGNED BY: C. CARLSON	CHECKED BY: W. LAMMER
se045sub2.i	SHEET 52 OF 108