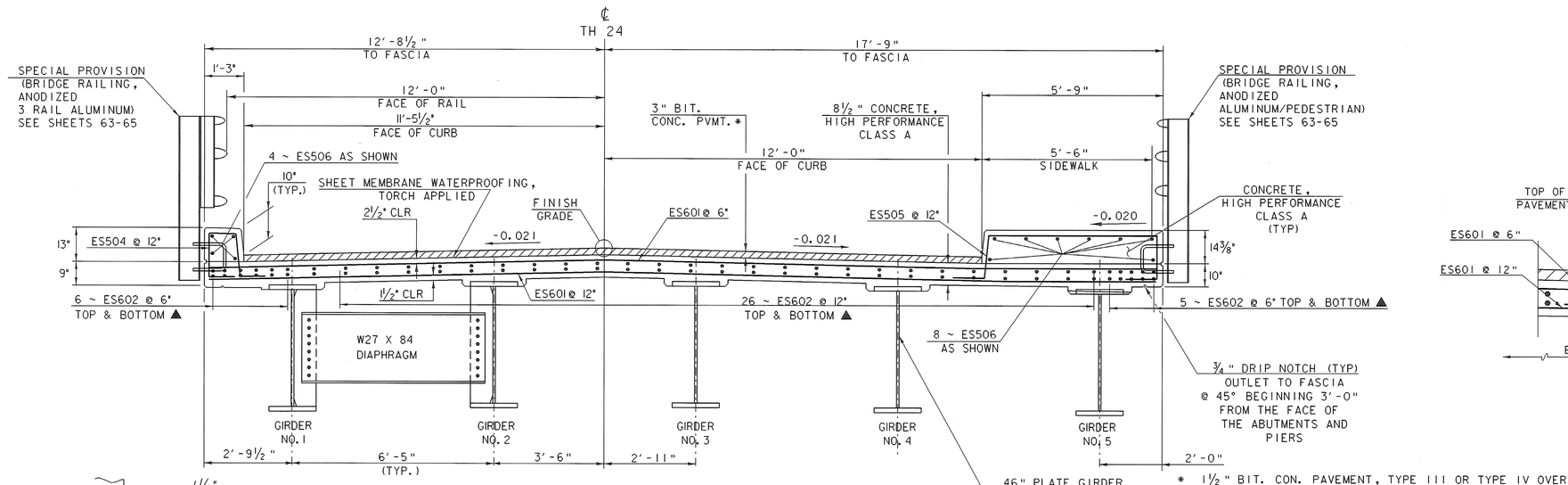

* 1½" BIT. CON. PAVEMENT, TYPE III OR TYPE IV OVER 1½" BIT. CONC. PAVEMENT, TYPE III OR TYPE IV

TYPICAL BRIDGE SECTION

SCALE ½" = 1'-0

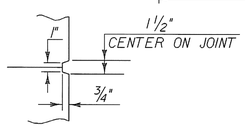

SCORE MARK DETAIL

NTS

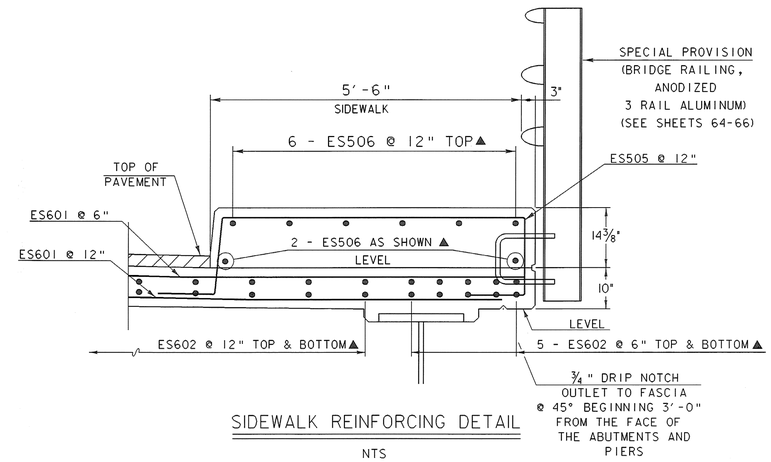

SIDEWALK REINFORCING DETAIL

NTS

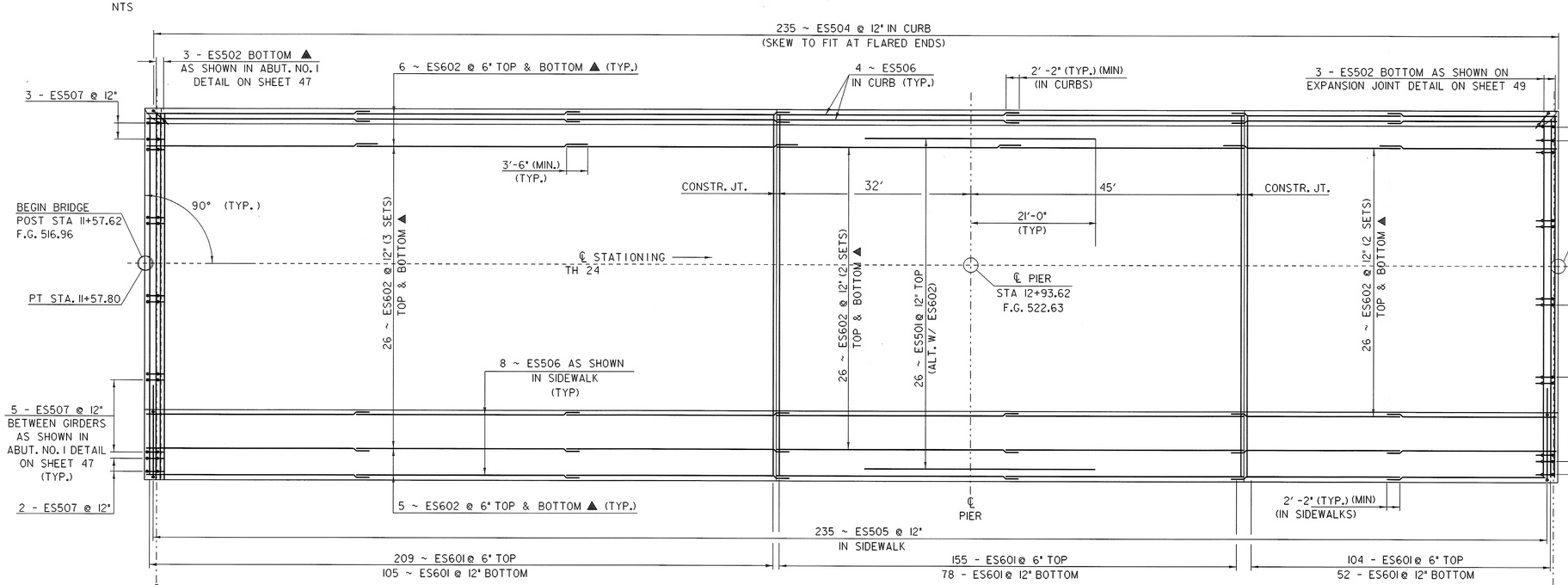

DECK REINFORCING PLAN

HORIZONTAL SCALE 1" = 10'-0"
VERTICAL SCALE 1" = 5'-0"

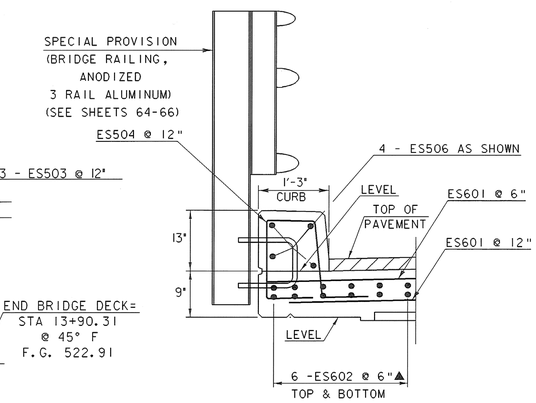

CURB REINFORCIING DETAIL

NTS

SHEET NAME: DECK REINFORCING PLAN	
PROJECT NAME: POWNAL	HIGHWAY NO.: TH 24
PROJECT NUMBER: BRZ 1441(19) C/2	BRIDGE NO.: 41
	OVER: HOOSIC RIVER
FILE NAME: /87e045/str/se045sup.dgn	PLOT DATE: 29-FEB-2008
PROJECT MANAGER: R. WHITCOMB	DRAWN BY: T. FILLBACH
DESIGNED BY: T.FILLBACH/C.CARLSON	IPARM NAME: se045supl.i
	SHEET 38 OF 108