TRAFFIC DATA

FROM VT ROUTE 78 (HIGHGATE) TO TH #15 / TH #24 (FRANKLIN)	
EST. 2004 ADT	= 360
EST. 2004 DHV	= 100
EST. 2024 ADT	= 490
EST. 2024 ADDT	= 50
EST. 2024 DHV	= 115
D	= 61%
T	= 8%
TOTAL 18-KIP ESAL'S	
2004-2024	= 171,000
2004-2044	= 441,000
DESIGN SPEED	
1+000.000 - 5+505.740	60 KM/H

FROM TH #15 / TH #24 (FRANKLIN) TO VT ROUTE 120 (FRANKLIN)	
EST. 2004 ADT	= 300
EST. 2004 DHV	= 95
EST. 2024 ADT	= 400
EST. 2024 ADDT	= 30
EST. 2024 DHV	= 105
D	= 59%
T	= 7%
TOTAL 18-KIP ESAL'S	
2004-2024	= 80,000
2004-2044	= 209,000
DESIGN SPEED	
5+505.740 - AH 15+464.139	60 KM/H

BITUMINOUS CONCRETE PAVEMENT SUPERPAVE MIXTURE DESIGN CRITERIA	
DESIGN LIFE ESALS (NORTH & SOUTHBOUND)	104,300
DESIGN NUMBER OF GYRATIONS	50
PERFORMANCE GRADED ASPHALT BINDER	PG 58-34

INDEX OF SHEETS

SEE SHEET 2

STATE OF VERMONT
AGENCY OF TRANSPORTATION

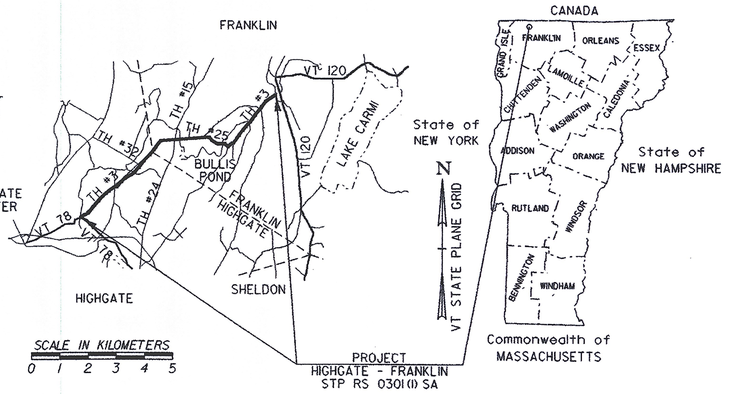

PROPOSED IMPROVEMENT
TOWNS OF HIGHGATE & FRANKLIN
COUNTY OF FRANKLIN

TOWN HIGHWAY NO. 3, CLASS 2 (MAJOR COLLECTOR)

PROJECT LOCATION:
BEGINNING AT THE INTERSECTION OF VERMONT ROUTE 78 AND EXTENDING NORTHEASTERLY TO END 0.434KM FROM THE INTERSECTION WITH VERMONT ROUTE 120

LENGTH OF ROADWAY = 8 687.132 m = 8.687KM
LENGTH OF PROJECT = 8 687.132 m = 8.687KM

PROJECT DESCRIPTION:
IMPROVEMENTS INCLUDE THE RECONSTRUCTION OF THE PAVEMENT, SUBBASE AND DRAINAGE OF TOWN HIGHWAY 3

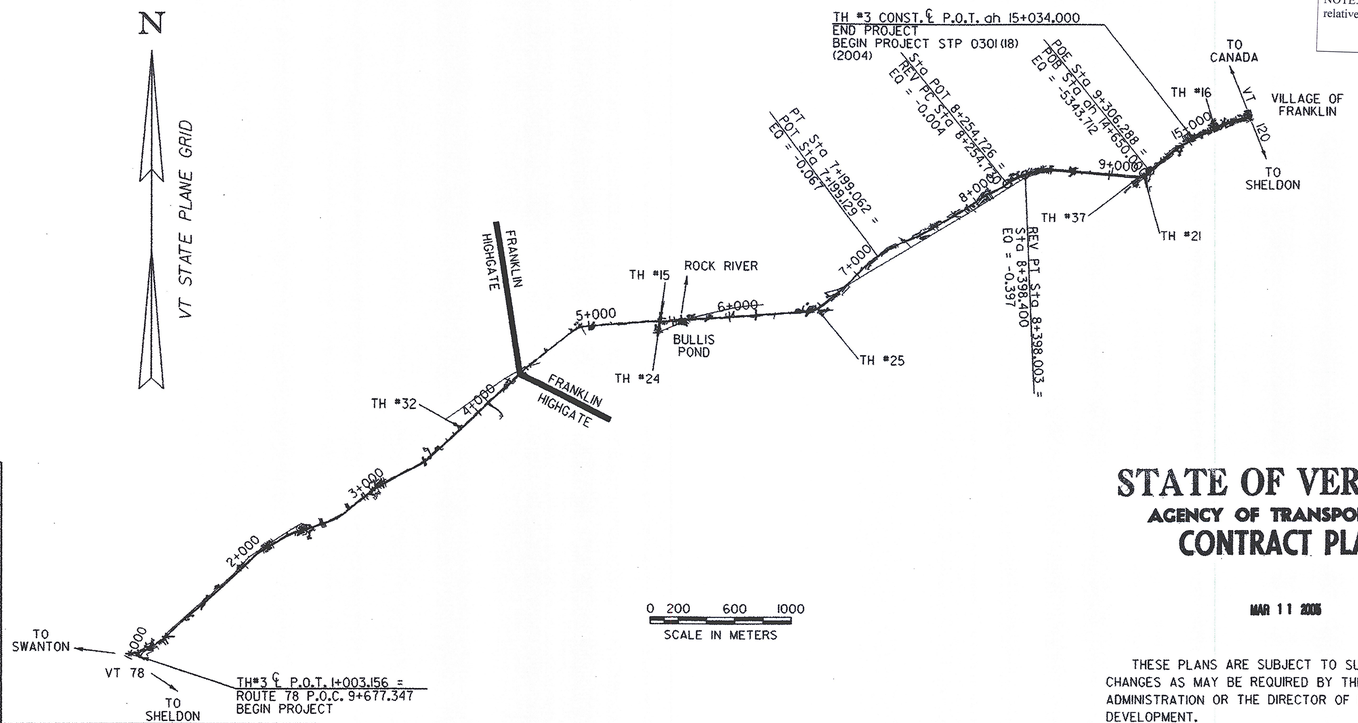

CONVENTIONAL SYMBOLS

COUNTY LINE
TOWN LINE
LIMITS OF ACCESS
POINT OF ACCESS
FENCE LINE
STONE WALL
TRAVELED WAY
GUARD RAIL
RAILROAD
SURVEY LINE
CULVERT
POWER POLE
TELEPHONE POLE
TREES
CONTROL OF ACCESS
PROPERTY LINE
R.O.W. TAKING LINE
SLOPE RIGHTS
TOP OF CUT
TOE OF SLOPE

SURVEYED BY : LITTLE RIVER SURVEY AND VTRANS
SURVEYED DATE : 1986

DATUM
VERTICAL NGVD 1929
HORIZONTAL N/A

RECORD PLANS

CONTRACTOR: J. A. MCDONALD INC. – LYNDON CENTER, VT
RESIDENT ENGINEER: RAY HAYES
CONSTRUCTION BEGAN: JULY 25, 2005
CONSTRUCTION COMPLETE: JULY 16, 2007
RECORD PLANS BY: RAY HAYES & SANDRA SCHMITT

I HEREBY CERTIFY THAT ALL THE CONSTRUCTION REQUIRED BY THIS SET OF DRAWINGS HAS BEEN ACCOMPLISHED AS INDICATED HEREIN.

BY Sandra C. Schmitt RESIDENT ENGINEER
DATE 02-12-14

NOTE: Any further information concerning final quantities, amounts or other details relative to this project may be found at Central Files in the electronic archives.

STATE OF VERMONT
AGENCY OF TRANSPORTATION
CONTRACT PLANS

MAR 11 2005

THESE PLANS ARE SUBJECT TO SUCH ENGINEERING CHANGES AS MAY BE REQUIRED BY THE FEDERAL HIGHWAY ADMINISTRATION OR THE DIRECTOR OF PROGRAM DEVELOPMENT.

CONSTRUCTION IS TO BE CARRIED ON IN ACCORDANCE WITH THESE PLANS AND THE STANDARD SPECIFICATIONS FOR CONSTRUCTION DATED 2001, AS APPROVED BY THE FEDERAL HIGHWAY ADMINISTRATION ON JANUARY 4, 2001 FOR USE ON THIS PROJECT, INCLUDING ALL SUBSEQUENT REVISIONS AND SUCH REVISED SPECIFICATIONS AND SPECIAL PROVISIONS AS ARE INCORPORATED IN THESE PLANS.

...85c060/design/dc060nul.dgn

VAOT Metric

UNLESS NOTED OTHERWISE
STATIONS ARE IN KILOMETERS
ELEVATIONS ARE IN METERS
DIMENSIONS ARE IN MILLIMETERS

DEPARTMENT OF TRANSPORTATION
FEDERAL HIGHWAY ADMINISTRATOR
APPROVED _____ DATE _____

DIRECTOR OF PROGRAM DEVELOPMENT
APPROVED _____ DATE 3-14-05

PROJECT MANAGER : SCOTT ROGERS

PROJECT NAME : HIGHGATE - FRANKLIN
PROJECT NUMBER : STP RS 0301(1) SA

SHEET 1 OF 450 SHEETS

INDEX OF SHEETS

Metric

INDEX OF SHEETS

1	TITLE SHEET
2	INDEX OF SHEETS
3-4	TYPICAL SECTIONS
5-11	QUANTITY SHEETS
12-14	DRAINAGE DETAIL SHEETS
15-19	ITEM DETAIL SHEETS
20-27	EARTHWORKS SHEETS
28-67	ROW
68	MISCELLANEOUS DETAILS
69-78	BLANK
79-81	TIE SHEETS
82-133	PLAN & PROFILE SHEETS
134-159	EROSION CONTROL PLAN SHEETS
160-163	EROSION CONTROL DETAIL SHEETS
164-189	LANDSCAPE SHEETS
190-192	LANDSCAPE DETAIL SHEETS
193-218	TRAFFIC SIGNS & PAVEMENT MARKINGS SHEETS
219-223	TRAFFIC SIGN SUMMARY SHEETS
224	TRAFFIC SIGN DETAILS
225	BRIDGE QUANTITY & GENERAL NOTES SHEET
226-231	BRIDGE PLAN & ELEVATION SHEETS
232	BRIDGE BOX CULVERT DETAIL SHEET
233	BRIDGE HEADWALL PLAN SHEET
234	BRIDGE HEADWALL REINFORCING SHEET
235	BRIDGE REINFORCING SCHEDULE SHEET
236-247	BRIDGE CHANNEL SECTIONS
248-271	BANKING DIAGRAMS
272	CONSTRUCTION APPROACH SIGNING SHEET
273-286	BLANK
287-450	CROSS SECTIONS

VAOT STANDARD SHEETS

STANDARD	DESCRIPTION	METRIC
A-62M	SLOPES IN SOLID ROCK EXCAV. (400 VPD & OVER)	6/13/97
B-12M	SIDE ROAD INTERSECTION, DEPRESSED RAMP	1/03/00
B-71M	RESIDENTIAL AND COMMERCIAL DRIVES	2/01/04
C-1M	CURBS, BITUMINOUS CONCRETE SIDEWALKS GRANITE SLOPE EDGING, VERTICAL GRANITE CURB PRECAST REINFORCED CONCRETE CURB CAST IN PLACE CONCRETE CURB BITUMINOUS CONCRETE CURB, TREATED TIMBER CURB	1/03/00
C-2BM	CEMENT CONCRETE SIDEWALK, GRANITE CURB	1/03/00
D-1M	PRECAST RCP DROP INLET REINFORCED CONCRETE PIPE D. I. W/ CAST IRON GRATE REINFORCED CONCRETE PIPE D. I. W/ CONCRETE COVER	6/13/97
D-2M	C.R.M. HEADWALLS, UNDERDRAIN C.R.M. HEADWALLS & RETAINING WALLS RIPRAP LIGHT TYPE SLOPE HEADWALL REINFORCED CONCRETE HEADWALL, UNDERDRAIN & CARRIER PIPE CONSTRUCTION DETAILS	6/13/97
D-3M	TREATED GUTTERS	6/13/97
D-4M	FLUSHING BASINS, END SECTION, ELBOWS TYPICAL WATERFALL FOR CULVERTS UP TO AND INCLUDING 48'' DIA EXTENSION SERVICE BOX AND CURB STOP CORRUGATED PIPE ELBOW GRANULAR BORROW AT CULVERT LOCATIONS UNDERDRAIN FLUSHING BASIN CORRUGATED STEEL PIPE END SECTION CORRUGATED STEEL PIPE ARCH END SECTION	6/13/97
D-6M	REINF. CONCRETE DROP INLET W/GRATE (DITCHES)	6/13/97
D-8M	REINFORCED CONCRETE DROP INLET WITH PRECAST COVER & GRATE (BOTTOM SECTION) SEE SHEETS D-9,10,11 FOR TOP SECTION	1/03/00
D-9M	REINFORCED CONCRETE DROP INLET TOPS VERTICAL CURB & THROAT ADAPTER	6/13/97
D-11M	GRATES & COVERS (TYPE A)	6/13/97
D-15M	PRECAST REINF. CONC. MANHOLE GRATES (BICYCLE SAFE) CAST IRON GRATE WITH FRAME, TYPE D CAST IRON GRATE WITH FRAME, TYPE E	6/13/97
D-16M	PRECAST CURB DI. GRATE, RCP END SECTION, ETC. CAST IRON GRATE, TYPE B CAST IRON GRATE, TYPE C UNDERDRAIN RISER REINFORCED CONCRETE PIPE END SECTION ENERGY DISSIPATOR FOR CULVERT	6/13/97
D-20M	HIGHWAY CROSSING SLEEVES FOR UNDERGROUND UTILITIES	6/13/97
E-100M	CONSTRUCTION APPROACH SIGNS	3/01/04
E-100AM	SIDE ROAD CONSTRUCTION - APPROACH SIGNS	3/01/04
E-101M	CONSTRUCTION SIGN DETAILS	5/30/03
E-102	CONSTRUCTION SIGN DETAILS	6/30/03
E-102AM	CONSTRUCTION SIGN DETAILS	6/13/97
E-106M	TRAFFIC CONTROL - MISCELLANEOUS DETAILS	3/01/04
E-107M	DELINEATION, BARRICADES AND DETOURS FOR CONSTRUCTION AREAS	6/30/03
E-107AM	BREAKAWAY BARRICADE DETAILS	6/13/97
E-108M	CONSTRUCTION ZONE LONGITUDINAL DROP OFFS	6/13/97
E-110M	MAJOR MAINTENANCE OPERATION LANE CLOSURE	6/13/97
E-119	UTILITY WORK ZONE	3/01/04
E-121M	STANDARD SIGN PLACEMENT - CONVENTIONAL ROAD	6/13/97
E-123	GUIDE SIGN PLACEMENT - MISCELLANEOUS DETAILS	3/16/04
E-124M	TOWN LINE SIGNS	6/13/97
E-138M	MILE MARKER DETAILS - STATE AND TOWN HIGHWAYS	5/30/03
E-141M	REGULATORY SIGN DETAILS	6/13/97
E-142M	REGULATORY SIGN DETAILS	6/13/97
E-143M	REGULATORY SIGN DETAILS	6/13/97
E-150	WARNING SIGN DETAILS	5/01/04
E-153	WARNING SIGN DETAILS	5/01/04
E-154	WARNING SIGN DETAILS	5/01/04
E-155	WARNING SIGN DETAILS	5/01/04
E-160	FLANGED CHANNEL STEEL SIGN POST	5/20/99
E-164	SQUARE STEEL SIGN POST	5/20/99
E-191M	PAVEMENT MARKING DETAILS	2/01/99
E-193M	PAVEMENT MARKING DETAILS	6/13/97
G-1M	STEEL BEAM GUARDRAIL (50MPH & OVER) HEAVY DUTY STEEL BEAM GUARDRAIL TWISTED END TERMINAL ANCHOR FOR STEEL BEAM RAIL	1/03/00
G-1DM	STEEL BEAM GUARDRAIL (40MPH & LESS) HEAVY DUTY STEEL BEAM GUARDRAIL STEEL BEAM MEDIAN BARRIER ANCHOR FOR STEEL BEAM RAIL	1/03/00
G-19M	GENERIC GRADING PLANS FOR GUARDRAIL END TERMINALS	11/15/02
J-3M	MAILBOX SUPPORT DETAILS	6/13/97

PROJECT NAME: HIGHGATE - FRANKLIN
PROJECT NUMBER: STP RS 0301(1) SA

FILE NAME: ...85c060/design/dc060frm.dgn PLOT DATE: 09-MAY-2005
PROJECT LEADER: DELLASANTA DRAWN BY: SQUAD B
DESIGNED BY: SQUAD B CHECKED BY: SQUAD B
IPARM FILE NAME: dc060ind.i SHEET 2 OF 450

TYPICAL SECTIONS

150 mm BITUMINOUS CONCRETE PAVEMENT
(50mm TYPE IIIS OVER 100mm TYPE IS) PG 58-34
450 mm SUBBASE OF DENSE GRADED CRUSHED STONE
(1+100.000 TO 5+600.000)
(5+720.000 TO 9+300.000)
450 mm SUBBASE OF DENSE GRADED CRUSHED STONE
(ah 14+700.000 TO ah 15+034.000)
650 mm SAND BORROW
(ah 14+700.000 TO ah 15+034.000)

MATERIALS TOLERANCE TABLE

MATERIAL ITEM	THICKNESS TOLERANCE
PAVEMENT (TOTAL DEPTH)	±5 mm
SUBBASE (TOTAL DEPTH)	±30 mm
SAND BORROW (TOTAL DEPTH)	±30 mm

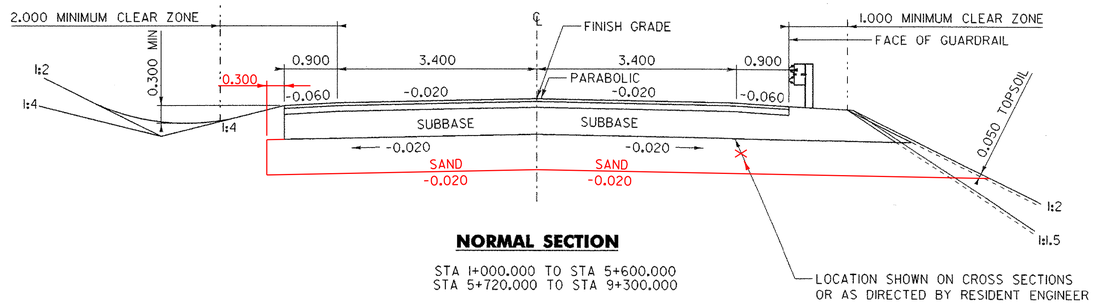

NORMAL SECTION

STA 1+000.000 TO STA 5+600.000
STA 5+720.000 TO STA 9+300.000

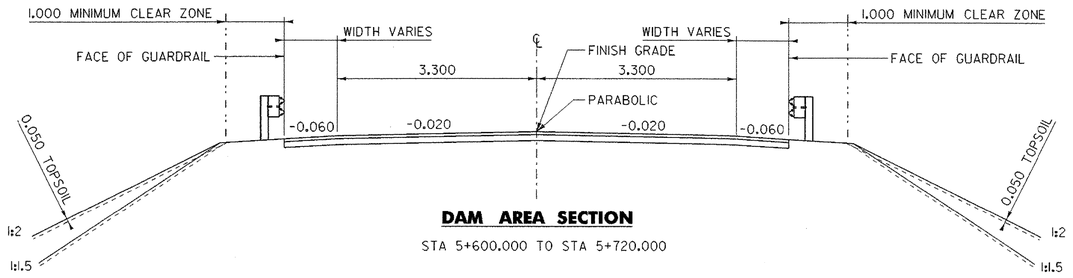

DAM AREA SECTION

STA 5+600.000 TO STA 5+720.000

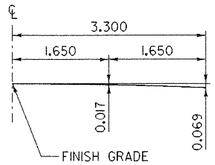

PARABOLIC DETAIL

3.3M LANE

SEEDING FORMULA

RURAL AREAS

% MASS	kg/ha	NAME	PUR.%	GERM.%
5.0	4	RED TOP	95	90
37.5	26	CREEPING RED FESCUE	98	85
15.0	10	BIRDS FOOT TREFOIL (VAR. EMPIRE)	98	85
37.5	26	TALL FESCUE	95	90
5.0	4	ANNUAL RYE GRASS	95	85
100.0	70			

URBAN AREAS

% MASS	kg/ha	NAME	PUR.%	GERM.%
42.5	38	CREEPING RED FESCUE (VAR. PENNLAWN)	98	85
42.5	38	KENTUCKY BLUEGRASS (COMMON)	85	85
10.0	9	PERENNIAL RYE GRASS (VAR. PENNFINE)	95	90
5.0	5	ANNUAL RYE GRASS	95	85
100.0	90			

GENERAL NOTES

SEED MIXTURE: SHALL NOT HAVE A WEED CONTENT EXCEEDING 0.40% BY MASS AND SHALL BE FREE OF ALL NOXIOUS SEED.

SEED: TO BE APPLIED PER SEEDING FORMULA, OR AS DIRECTED BY THE ENGINEER.

FERTILIZER: FORMULA 10-20-10 TO BE USED WITH SEED, APPLIED AT THE RATE OF 560 kg/ha. (HYDRO SEEDERS MAY USE 19-19-19 FORMULA)

AGRICULTURAL LIMESTONE: TO BE APPLIED AT THE RATE OF 4.5 tons/ha, OR AS DIRECTED BY THE ENGINEER.

HAY MULCH: TO BE PLACED ON EARTH SLOPES AT THE RATE OF 4.5 tons/ha, OR AS DIRECTED BY THE ENGINEER.

TOPSOIL: TO BE USED WITH SEED, AS INDICATED ON THE PLANS, OR AS DIRECTED BY THE ENGINEER.

MARKER POSTS: TO BE PLACED AS INDICATED, OR AS DIRECTED BY ENGINEER.

SLOPE ROUNDING: ALL CUT SLOPES TO BE ROUNDED IN ACCORDANCE WITH STANDARD SHEET B-5M.

PAY LIMITS OF SAND BORROW: WHEN USED IN CONJUNCTION WITH UNDERDRAIN - SEE STANDARD SHEET D-2M.

TACK COAT: EMULSIFIED ASPHALT IS TO BE APPLIED AT THE RATE OF 0.07 L/m2 BETWEEN SUCCESSIVE COURSES OF PAVEMENT, OR AS DIRECTED BY THE ENGINEER.

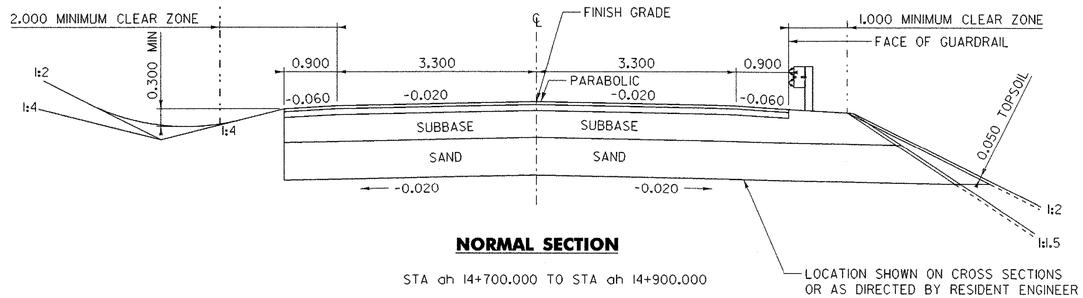

NORMAL SECTION

STA ah 14+700.000 TO STA ah 14+900.000

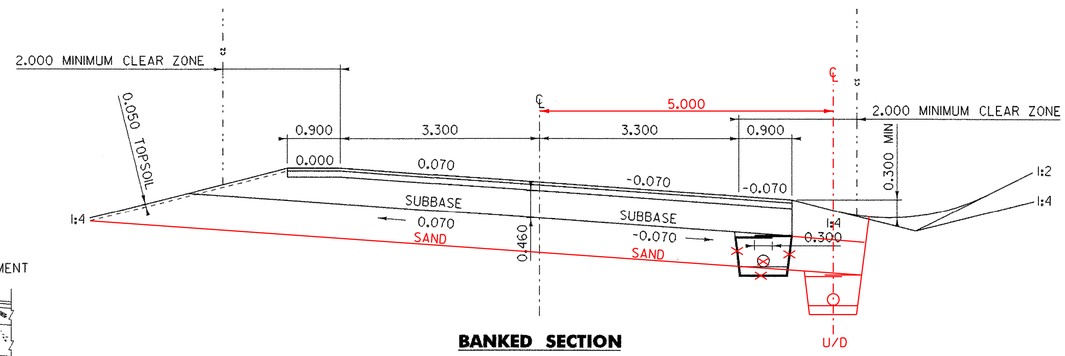

BANKED SECTION

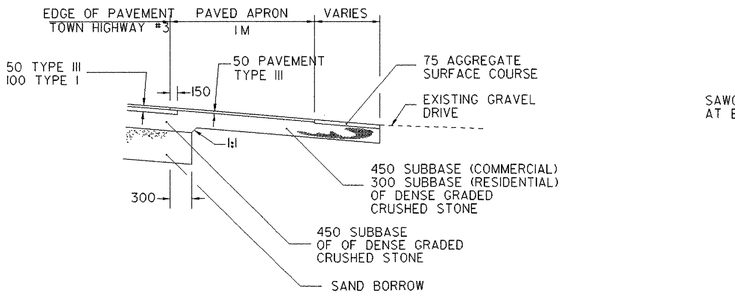

PAVED APRON AND BASE COURSE TRANSITION AT GRAVEL DRIVE

NOT TO SCALE

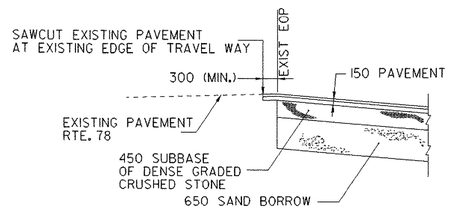

PAVEMENT MATCH DETAIL AT VT. RTE. 78

NOT TO SCALE

NOT TO SCALE

ALL DIMENSIONS IN M UNLESS OTHERWISE NOTED

PROJECT NAME:	HIGHGATE - FRANKLIN
PROJECT NUMBER:	STP RS 0301(1) SA
FILE NAME: ...85c060/design/dc060typ.dgn	PLOT DATE: 09-MAY-2005
PROJECT LEADER: DELLASANTA	DRAWN BY: SQUAD B
DESIGNED BY: SQUAD B	CHECKED BY: SQUAD B
IPARM FILE NAME: dc060typ1.i	SHEET 3 OF 450

TYPICAL SECTIONS

150 mm BITUMINOUS CONCRETE PAVEMENT
(50mm TYPE IIIS OVER 100mm TYPE IS) PG 58-34
450 mm SUBBASE OF DENSE GRADED CRUSHED STONE
(1+100.000 TO 5+600.000)
(5+720.000 TO 9+300.000)
450 mm SUBBASE OF DENSE GRADED CRUSHED STONE
(ah 14+700.000 TO ah 15+034.000)
650 mm SAND BORROW
(ah 14+700.000 TO ah 15+034.000)

NOT Metric

MATERIALS TOLERANCE TABLE

MATERIAL ITEM	THICKNESS TOLERANCE
PAVEMENT (TOTAL DEPTH)	±5 mm
SUBBASE (TOTAL DEPTH)	±30 mm
SAND BORROW (TOTAL DEPTH)	±30 mm

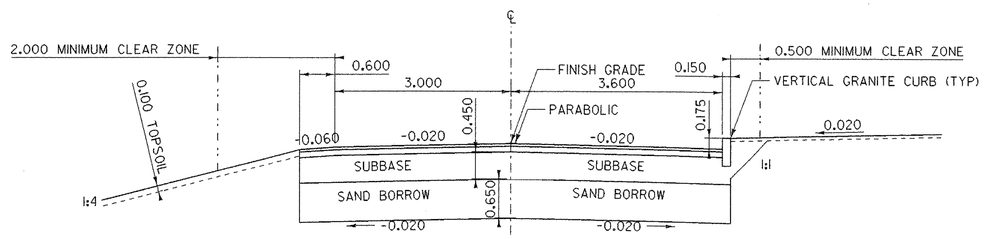

VILLAGE CURBED SECTION

STA ah 14+900.000 TO STA ah 15+034.000

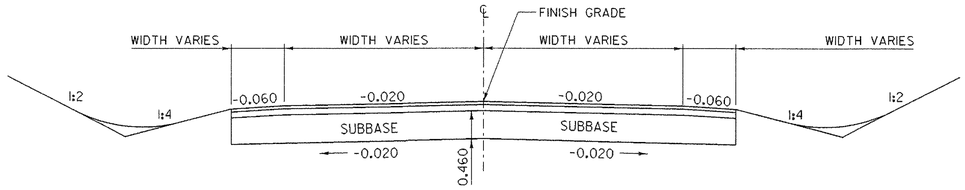

TOWH HIGHWAY TYPICAL SECTION

TH #32
TH #24
TH #15
TH #25
TH #21
TH #37

~~MIDWAY BETWEEN POINT OF SHOULDER AND POINT OF SUBGRADE~~
5.00M FROM CENTERLINE

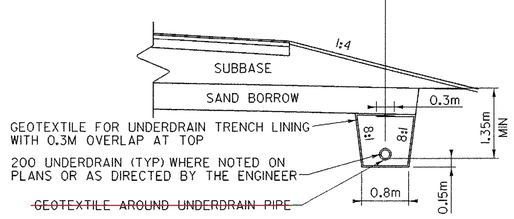

UNDERDRAIN DETAIL

~~MIDWAY BETWEEN POINT OF SHOULDER AND POINT OF SUBGRADE~~
5.00M FROM CENTERLINE

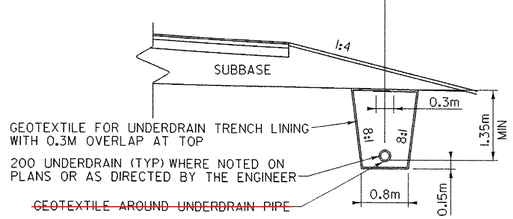

UNDERDRAIN DETAIL

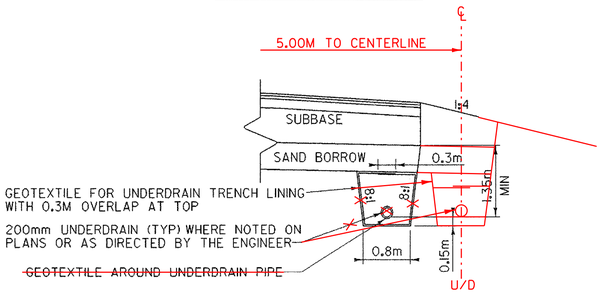

UNDERDRAIN DETAIL
UNDER TRAVELLED WAY

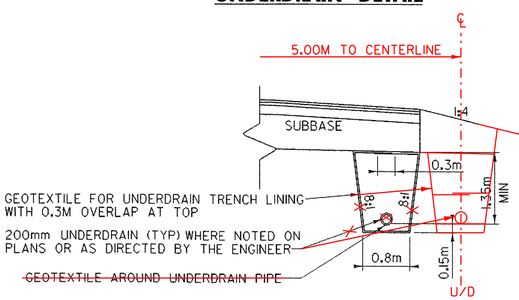

UNDERDRAIN DETAIL
UNDER TRAVELLED WAY

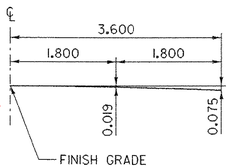

PARABOLIC DETAIL

3.6M LANE

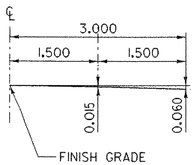

PARABOLIC DETAIL

3.0M LANE

~~TH #37~~

75mm AGGREGATE SURFACE COURSE
450 mm SUBBASE OF DENSE GRADED CRUSHED STONE

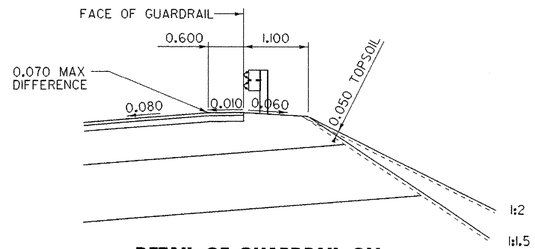

DETAIL OF GUARDRAIL ON
HIGH SIDE OF BANKED SECTION

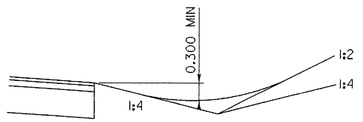

DETAILS OF DITCH & BACKSLOPE
FOR LOW SIDE OF BANK < 0.040

BACKFILL FOR ITEM 605.11 200mm UNDERDRAINS, WILL MEET THE FOLLOWING GRADATION REQUIREMENTS:

SIEVE SIZE (mm)	PERCENT BY MASS PASSING THE SQUARE MESH SIEVES
37.5	100
25.0	95-100
12.5	60-80
4.75	40-55
2.36	5-25
1.18	0-12
300um	0-5

NOT TO SCALE

ALL DIMENSIONS IN M UNLESS OTHERWISE NOTED

PROJECT NAME:	HIGHGATE - FRANKLIN
PROJECT NUMBER:	STP RS 0301(1) SA
FILE NAME: ...85c060/design/dc060typ.dgn	PLOT DATE: 09-MAY-2005
PROJECT LEADER: DELLASANTA	DRAWN BY: SQUAD B
DESIGNED BY: SQUAD B	CHECKED BY: SQUAD B
IPARM FILE NAME: dc060ty2.i	SHEET 4 OF 450

STATE OF VERMONT
AGENCY OF TRANSPORTATION

QUANTITY SHEET

Not Metric

SUMMARY OF ESTIMATED QUANTITIES

UTILITIES	C E	TRAINING	EROSION CONTROL	LANDSCAPE	BRIDGE	ROADWAY	QUANTITIES GRAND TOTAL	UNIT	ITEMS	ITEM NUMBER	RND
						1	1	LS	CLEARING AND GRUBBING	201.10	-
									(INCL INDV. TREES & STUMPS)		
						35500	35500	CM	COMMON EXCAVATION	203.15	671
						500	500	CM	SOLID ROCK EXCAVATION	203.16	320
					80		80	CM	UNCLASSIFIED CHANNEL EXCAVATION	203.27	4
						100	100	CM	EXCAVATION OF SURFACES AND PAVEMENTS	203.28	19
				100		39700	39800	CM	EARTH BORROW	203.30	71
						21000	21000	CM	SAND BORROW	203.31	361
						75900	75900	SM	FINE GRADING - SUBGRADE	203.40	61
					20	7600	7620	CM	TRENCH EXCAVATION OF EARTH	204.20	97
						1	1	CM	TRENCH EXCAVATION OF EARTH (N.A.B.I.)	204.20	EST
						100	100	CM	TRENCH EXCAVATION OF ROCK	204.21	4
					1625		1625	CM	STRUCTURE EXCAVATION	204.25	26
					1630	600	2230	CM	GRANULAR BACKFILL FOR STRUCTURES	204.30	20
						400	400	SM	DRILLING AND BLASTING OF SOLID ROCK SUBGRADE	205.20	EST
						46400	46400	CM	SUBBASE OF DENSE GRADED CRUSHED STONE	301.35	505
						450	450	CM	AGGREGATE SURFACE COURSE	401.10	17
					110		110	L	TAR EMULSION	404.45	EST
						9300	9300	KG	EMULSIFIED ASPHALT	404.65	114
						1	1	LU	PRICE ADJUSTMENT ASPHALT CEMENT (NABI)	406.50	-
						27900	27900	T	SUPERPAVE BITUMINOUS CONCRETE PAVEMENT (PG 58-34)	490.30	280
						40	40	CM	CONCRETE, CLASS B	501.25	2
					210		210	CM	CONCRETE, HIGH PERFORMANCE CLASS B	501.34	2
					15000	2000	17000	KG	REINFORCING STEEL	507.15	61

DETAILED SUMMARY OF QUANTITIES

QUANTITIES	UNIT	ITEMS
		COMMON EXCAVATION (INCLUDING PROPOSED SAND BORROW)
31523	CM	MAINLINE
50	CM	TOWN HIGHWAY #32
458	CM	TOWN HIGHWAY #24
627	CM	TOWN HIGHWAY #15
102	CM	TOWN HIGHWAY #25
356	CM	TOWN HIGHWAY #37
218	CM	TOWN HIGHWAY #21
1496	CM	DRIVES
670	CM	ROUNDING
35500	CM	TOTAL
		SOLID ROCK EXCAVATION
142	CM	MAINLINE
39	CM	DRIVES
319	CM	ROUNDING
500	CM	TOTAL
		SUBBASE OF DENSE GRADED CRUSHED STONE
43038	CM	MAINLINE
81	CM	TOWN HIGHWAY #32
153	CM	TOWN HIGHWAY #24
230	CM	TOWN HIGHWAY #15
116	CM	TOWN HIGHWAY #25
133	CM	TOWN HIGHWAY #37
53	CM	TOWN HIGHWAY #21
2091	CM	DRIVES
505	CM	ROUNDING
46400	CM	TOTAL
		BITUMINOUS CONCRETE PAVEMENT
26736	CM	MAINLINE
167	CM	TOWN HIGHWAY #32
267	CM	TOWN HIGHWAY #24
71	CM	TOWN HIGHWAY #15
45	CM	TOWN HIGHWAY #25
156	CM	TOWN HIGHWAY #37
79	CM	TOWN HIGHWAY #21
99	CM	DRIVES
280	CM	ROUNDING
27900	CM	TOTAL
		FINE GRADING - SUBGRADE
75839	SM	MAINLINE
61	SM	ROUNDING
75900	SM	TOTAL

DETAILED SUMMARY OF QUANTITIES

QUANTITIES	UNIT	ITEMS
		TRENCH EXCAVATION OF EARTH
1746	CM	DESIGNED DRAINAGE
5757	CM	UNDERDRAIN
97	CM	ROUNDING
7600	CM	TOTAL
		SAND BORROW
20639	CM	MAINLINE
361	CM	ROUNDING
21000	CM	TOTAL

PROJECT NAME: HIGHGATE - FRANKLIN
PROJECT NUMBER: STP RS 0301(1) SA

FILE NAME: ...85c060/design/dc060frm.dgn PLOT DATE: 09-MAY-2005
PROJECT LEADER: DELLASANTA DRAWN BY: SQUAD B
DESIGNED BY: SQUAD B CHECKED BY: SQUAD B
IPARM FILE NAME: dc060qsl.i SHEET 5 OF 450

STATE OF VERMONT
AGENCY OF TRANSPORTATION

QUANTITY SHEET

Metric

SUMMARY OF ESTIMATED QUANTITIES

UTILITIES	C E	TRAINING	EROSION CONTROL	LANDSCAPE	BRIDGE	ROADWAY	QUANTITIES GRAND TOTAL	UNIT	ITEMS	ITEM NUMBER	RND
					60		60	L	WATER REPELLENT (MOD - SILANE)	514.10	EST
					110		110	SM	SHEET MEMBRANE WATERPROOFING	519.20	0.3
					1		1	LS	PRECAST CONCRETE BOX	540.10	-
									(STA. 2+483.000 - 1850X1850X19900)		
					1		1	LS	PRECAST CONCRETE BOX	540.10	-
									(STA. 3+627.500 - 1850X1850X16800)		
						503	503	M	450MM CSP 1.63MM (68 MM X 12 MM)	601.0015	-
						12	12	M	600MM CSP 1.63MM (68 MM X 12 MM)	601.0025	-
						23	23	M	450MM PCCSP 1.63MM (68 MM X 12 MM)	601.0415	-
					69		69	M	1800 MM PCCSP 2.77 MM (75 MM X 25MM)	601.0542	-
									(MOD. – 3.51 MM (75MM X 25MM))		
									BEGIN OPTION PIPES		
						273	273	M	450MM CAAP 1.52MM (68 MM X 12 MM)	601.0215	-
						273	273	M	450MM PCCSP 1.63MM (68 MM X 12 MM)	601.0415	-
						273	273	M	450MM CPEP	601.0915	-
						24	24	M	450MM CAAP 1.52MM (68 MM X 12 MM)	601.0215	-
						24	24	M	450MM PCCSP 1.63MM (68 MM X 12 MM)	601.0415	-
						24	24	M	450MM RCP CLASS III	601.0815	-
						24	24	M	450MM CPEP	601.0915	-
						135	135	M	600MM CAAP 1.52MM (68 MM X 12 MM)	601.0225	-
						135	135	M	600MM PCCSP 1.63MM (68 MM X 12 MM)	601.0425	-
						135	135	M	600MM CPEP	601.0920	-
						117	117	M	750MM CAAP 1.91MM (68 MM X 12 MM)	601.0236	-
						117	117	M	750MM PCCSP 2.01MM (68 MM X 12 MM)	601.0436	-
						117	117	M	750MM CPEP	601.0925	-
						112	112	M	900MM CAAP 1.91MM (68 MM X 12 MM)	601.0246	-
						112	112	M	900MM PCCSP 2.01MM (68 MM X 12 MM)	601.0446	-
						112	112	M	900MM CPEP	601.0930	-
						56	56	M	1050MM CAAP 2.67MM (68 MM X 12 MM)	601.0252	-
						56	56	M	1050MM PCCSP 2.77MM (68 MM X 12 MM)	601.0452	-
						1	1	EA	450MM CAAPES 1.52MM (68 MM X 12 MM)	601.6215	-
						1	1	EA	450MM CPEPES	601.7015	-
						2	2	EA	600MM CAAPES 1.52MM (68 MM X 12 MM)	601.6225	-
						2	2	EA	600MM CPEPES	601.7020	-
									END OPTION PIPES		

DETAILED SUMMARY OF QUANTITIES

QUANTITIES	UNIT	ITEMS

DETAILED SUMMARY OF QUANTITIES

QUANTITIES	UNIT	ITEMS

PROJECT NAME: HIGHGATE - FRANKLIN
PROJECT NUMBER: STP RS 0301(1) SA

FILE NAME: ...85c060/design/dc060frm.dgn PLOT DATE: 09-MAY-2005
PROJECT LEADER: DELLASANTA DRAWN BY: SQUAD B
DESIGNED BY: SQUAD B CHECKED BY: SQUAD B
IPARM FILE NAME: dc060qs2.i SHEET 6 OF 450

STATE OF VERMONT
AGENCY OF TRANSPORTATION

QUANTITY SHEET

Metric

SUMMARY OF ESTIMATED QUANTITIES

UTILITIES	C E	TRAINING	EROSION CONTROL	LANDSCAPE	BRIDGE	ROADWAY	QUANTITIES GRAND TOTAL	UNIT	ITEMS	ITEM NUMBER	RND
						25	25	CM	CEMENT RUBBLE MASONRY	602.15	1
						17	17	EA	CAST IRON GRATE WITH FRAME, TYPE A	604.45	-
						4	4	EA	CAST IRON GRATE WITH FRAME, TYPE D	604.47	-
						1	1	EA	CAST IRON COVER WITH FRAME	604.55	-
						6450	6450	M	200MM UNDERDRAIN	605.11	61
						500	500	M	150MM UNDERDRAIN CARRIER PIPE (MOD)	605.20	-
						450	450	M	200MM UNDERDRAIN CARRIER PIPE	605.21	36
						94	94	EA	UNDERDRAIN FLUSHING BASINS	605.95	-
						450	450	HR	ROADWAY PATROL MAINTENANCE	607.10	12
						137	137	HR	BULLDOZER RENTAL, TYPE I	608.10	EST
						137	137	HR	ALL PURPOSE EXCAVATOR RENTAL, TYPE I	608.25	EST
						137	137	HR	POWER BROOM RENTAL	608.30	EST
						137	137	HR	TRUCK RENTAL	608.37	EST
						14660	14660	CM	DUST CONTROL WITH WATER	609.10	150
				1000			1000	CM	DUST CONTROL WITH WATER (MOD - PLANT WATERING)	609.10	EST
						30	30	T	DUST AND ICE CONTROL WITH CALCIUM CHLORIDE	609.15	3
			250				250	CM	STONE FILL, TYPE I	613.10	8
			100				100	CM	STONE FILL, TYPE I (MOD - PERM SED TRAP)	613.10	EST
			65				65	CM	STONE FILL, TYPE I (MOD - CONST ENT)	613.10	EST
					135	8300	8435	CM	STONE FILL, TYPE II	613.11	75
					1		1	LS	TEMPORARY RELOCATION OF STREAM (STA. 2+217.250)	614.10	-
					1		1	LS	TEMPORARY RELOCATION OF STREAM (STA. 2+483.000)	614.10	-

DETAILED SUMMARY OF QUANTITIES

QUANTITIES	UNIT	ITEMS

DETAILED SUMMARY OF QUANTITIES

QUANTITIES	UNIT	ITEMS

PROJECT NAME: HIGHGATE - FRANKLIN
PROJECT NUMBER: STP RS 0301(I) SA

FILE NAME: ...85c060/design/dc060frm.dgn
PROJECT LEADER: DELLASANTA
DESIGNED BY: SQUAD B
IPARM FILE NAME: dc060qs3.i

PLOT DATE: 09-MAY-2005
DRAWN BY: SQUAD B
CHECKED BY: SQUAD B
SHEET 7 OF 450

STATE OF VERMONT
AGENCY OF TRANSPORTATION

QUANTITY SHEET

VAOT Metric

SUMMARY OF ESTIMATED QUANTITIES

UTILITIES	C E	TRAINING	EROSION CONTROL	LANDSCAPE	BRIDGE	ROADWAY	QUANTITIES GRAND TOTAL	UNIT	ITEMS	ITEM NUMBER	RND
					1		1	LS	TEMPORARY RELOCATION OF STREAM (STA. 3+148.500)	614.10	-
					1		1	LS	TEMPORARY RELOCATION OF STREAM (STA. 3+627.500)	614.10	-
					1		1	LS	TEMPORARY RELOCATION OF STREAM (STA. 6+189.250)	614.10	-
					1		1	LS	TEMPORARY RELOCATION OF STREAM (STA. 8+744.500)	614.10	-
						340	340	M	VERTICAL GRANITE CURB	616.21	4
						26	26	EA	RELOCATE MAILBOX, SINGLE SUPPORT	617.10	-
						35	35	EA	RELOCATE MAILBOX, SINGLE SUPPORT (MOD)	617.10	-
						11	11	SM	PORTLAND CEMENT CONCRETE SIDEWALK, 125MM	618.10	-
						145	145	EA	YIELDING MARKER POSTS	619.17	3
						1440	1440	M	REMOVING AND RESETTING FENCE	620.50	14
						55	55	M	REMOVING AND RESETTING FENCE (MOD)	620.50	2
			2300	830		500	3630	M	SNOW FENCE	620.70	404
			1450				1450	M	SNOW FENCE (MOD - PDF)	620.70	44
						2648	2648	M	STEEL BEAM GUARDRAIL (GALVANIZED)	621.20	-
						31	31	EA	MANUFACTURED TERMINAL SECTION (TANGENT)	621.505	-
						27	27	EA	ANCHOR FOR STEEL BEAM RAIL	621.60	-
						200	200	M	TEMPORARY TRAFFIC BARRIER	621.90	EST
3							3	CM	INSULATION BOARD	622.10	EST
20							20	M	SLEEVES FOR UTILITIES (150MM DIAMETER)	625.10	-
406							406	M	SLEEVES FOR UTILITIES (115MM DIAMETER) (MOD)	625.10	-
8							8	EA	ADJUST ELEVATION OF VALVE BOX	629.20	EST

DETAILED SUMMARY OF QUANTITIES

QUANTITIES	UNIT	ITEMS

DETAILED SUMMARY OF QUANTITIES

QUANTITIES	UNIT	ITEMS

PROJECT NAME: HIGHGATE - FRANKLIN
PROJECT NUMBER: STP RS 0301(1) SA

FILE NAME: ...85c060/design/dc060frm.dgn PLOT DATE: 09-MAY-2005
PROJECT LEADER: DELLASANTA DRAWN BY: SQUAD B
DESIGNED BY: SQUAD B CHECKED BY: SQUAD B
IPARM FILE NAME: dc060qs4.i SHEET 8 OF 450

STATE OF VERMONT
AGENCY OF TRANSPORTATION

QUANTITY SHEET

Metric

SUMMARY OF ESTIMATED QUANTITIES

UTILITIES	C E	TRAINING	EROSION CONTROL	LANDSCAPE	BRIDGE	ROADWAY	QUANTITIES GRAND TOTAL	UNIT	ITEMS	ITEM NUMBER	RND
50							50	M	SEAMLESS COPPER WATER TUBE (19MM)	629.23	EST
5							5	EA	EXTENSION SERVICE BOX AND CURB STOP	629.25	EST
2							2	EA	HYDRANT, RELOCATE	629.29	EST
30							30	M	PLASTIC WATER PIPE, RIGID (150 MM CL 150, PVC PIPE)	629.33	EST
30							30	M	PLASTIC WATER PIPE, RIGID (200 MM CL 150, PVC PIPE)	629.33	EST
30							30	M	PLASTIC WATER PIPE, RIGID (250 MM CL 150, PVC PIPE)	629.33	EST
30							30	M	PLASTIC WATER PIPE, RIGID (300 MM CL 150, PVC PIPE)	629.33	EST
						550	550	HR	UNIFORMED TRAFFIC OFFICERS	630.10	EST
						9075	9075	HR	FLAGGERS	630.15	EST
	1						1	LS	FIELD OFFICE - ENGINEERS (MOD-43SM)	631.10	EST
	1						1	LS	TESTING EQUIPMENT - CONCRETE	631.16	EST
	1						1	LS	TESTING EQUIPMENT - BITUMINOUS	631.17	EST
	1						1	LU	FIELD OFFICE - TELEPHONE (NABI)	631.25	EST
		520					520	HR	EMPLOYEE TRAINEESHIP	634.10	EST
						1	1	LS	MOBILIZATION/DEMOBILIZATION	635.11	-
						1	1	LS	TRAFFIC CONTROL	641.10	-
						2	2	EA	PORTABLE CHANGEABLE MESSAGE SIGN	641.15	EST
						17680	17680	M	DURABLE 100MM WHITE LINE (THERMOPLASTIC)	646.40	177
						17660	17660	M	DURABLE 100MM YELLOW LINE (THERMOPLASTIC)	646.41	170
						60	60	M	DURABLE 600MM STOP BAR (THERMOPLASTIC)	646.46	2
						32	32	EA	DURABLE LETTER OR SYMBOL (THERMOPLASTIC)	646.50	-
						35350	35350	M	TEMPORARY 100MM WHITE LINE	646.60	346
						35330	35330	M	TEMPORARY 100MM YELLOW LINE	646.61	350

DETAILED SUMMARY OF QUANTITIES

QUANTITIES	UNIT	ITEMS

DETAILED SUMMARY OF QUANTITIES

QUANTITIES	UNIT	ITEMS

PROJECT NAME: HIGHGATE - FRANKLIN
PROJECT NUMBER: STP RS 0301(1) SA

FILE NAME: ...85c060/design/dc060frm.dgn
PROJECT LEADER: DELLASANTA
DESIGNED BY: SQUAD B
IPARM FILE NAME: dc060qs5.i

PLOT DATE: 09-MAY-2005
DRAWN BY: SQUAD B
CHECKED BY: SQUAD B
SHEET 9 OF 450

STATE OF VERMONT
AGENCY OF TRANSPORTATION

QUANTITY SHEET

Metric

SUMMARY OF ESTIMATED QUANTITIES

UTILITIES	C E	TRAINING	EROSION CONTROL	LANDSCAPE	BRIDGE	ROADWAY	QUANTITIES GRAND TOTAL	UNIT	ITEMS	ITEM NUMBER	RND
						120	120	M	TEMPORARY 600MM STOP BAR	646.66	4
						64	64	EA	TEMPORARY LETTER OR SYMBOL	646.70	-
						2187	2187	EA	LINE STRIPING TARGETS	646.76	-
						10	10	SM	REMOVAL OF EXISTING PAVEMENT MARKINGS	646.85	1
			1980		310	1875	4165	SM	GEOTEXTILE UNDER STONE FILL	649.31	52
						27750	27750	SM	GEOTEXTILE FOR UNDERDRAIN TRENCH LINING	649.41	277
			5600				5600	SM	GEOTEXTILE FOR SILT FENCE	649.51	96
						500	500	KG	SEED	651.15	1
			500				500	KG	SEED - WINTER RYE	651.17	1
						4050	4050	KG	FERTILIZER	651.18	59
				50			50	KG	FERTILIZER (MOD - MYCORRHIZAL)	651.18	23
						35	35	T	AGRICULTURAL LIMESTONE	651.20	3
						50	50	T	HAY MULCH	651.25	2
				25			25	CM	CEDAR BARK MULCH	651.27	8
				75		3650	3725	CM	TOPSOIL	651.35	64
				50			50	CM	TOPSOIL (MOD-COMPOST)	651.35	21
					110	2900	3010	SM	GRUBBING MATERIAL	651.40	44
			1				1	LS	EROSION PREVENTION & SEDIMENT CONTROL PLAN	652.10	-
			1000				1000	HR	MONITORING EROSION PREVENTION & SEDIMENT CONTROL PLAN	652.20	-
			1				1	LU	MAINTENANCE OF EROSION PREVENTION & SEDIMENT CONTROL PLAN (NABI)	652.30	-
			6000				6000	SM	EROSION MATTING	654.10	16

DETAILED SUMMARY OF QUANTITIES

QUANTITIES	UNIT	ITEMS

DETAILED SUMMARY OF QUANTITIES

QUANTITIES	UNIT	ITEMS

PROJECT NAME: HIGHGATE - FRANKLIN
PROJECT NUMBER: STP RS 0301(1) SA

FILE NAME: ...85c060/design/dc060frm.dgn PLOT DATE: 09-MAY-2005
PROJECT LEADER: DELLASANTA DRAWN BY: SQUAD B
DESIGNED BY: SQUAD B CHECKED BY: SQUAD B
IPARM FILE NAME: dc060qs6.i SHEET 10 OF 450

STATE OF VERMONT
AGENCY OF TRANSPORTATION

QUANTITY SHEET

Metric

SUMMARY OF ESTIMATED QUANTITIES

UTILITIES	C E	TRAINING	EROSION CONTROL	LANDSCAPE	BRIDGE	ROADWAY	QUANTITIES GRAND TOTAL	UNIT	ITEMS	ITEM NUMBER	RND
					270	16600	16870	SM	EROSION MATTING (JUTE)	654.10	197
				3			3	EA	DECIDUOUS TREES (NORTHWOOD RED MAPLE -	656.30	-
									31.8 TO 51 MM CAL - B&B)		
				14			14	EA	DECIDUOUS TREES (PAPER BIRCH - SINGLE STEM -	656.30	-
									51 TO 64 MM CAL - B&B)		
				12			12	EA	DECIDUOUS TREES (GREEN ASH - 51 TO 64 MM CAL - B&B)	656.30	-
				12			12	EA	DECIDUOUS TREES (AMERICAN HOPHORNBEAM -	656.30	-
									51 TO 64 MM CAL - B&B)		
				10			10	EA	DECIDUOUS TREES (NORTHERN RED OAK -	656.30	-
									51 TO 64 MM CAL - B&B)		
				15			15	EA	DECIDUOUS TREES (PRINCETON AMERICAN ELM -	656.30	-
									51 TO 64 MM CAL - B&B)		
				11			11	EA	DECIDUOUS SHRUBS (SHADBLOW SERVICEBERRY -	656.35	-
									CLUMP FORM - 0.09 TO 1.22 M HT. - B&B)		
				5			5	EA	DECIDUOUS SHRUBS (LILAC -	656.35	-
									0.91 TO 1.22 M HT. - B&B)		
				24			24	EA	DECIDUOUS SHRUBS (BLACKHAW VIBURNUM -	656.35	-
									0.91 TO 1.22 M HT. - B&B)		
				710			710	EA	GROUNDCOVERS AND VINES (COMMON ORANGE DAYLILY -	656.40	-
									3.79 L CONTAINER)		
				110			110	EA	GROUNDCOVERS AND VINES (HYPERION DAYLILY -	656.40	-
									3.79 L CONTAINER)		
				320			320	EA	GROUNDCOVERS AND VINES (LUPINE -	656.40	-
									3.79 L CONTAINER)		
				455			455	EA	TRANSPLANTING SHRUBS (MOD-DAYLILIES)	656.50	-
						22	22	SM	TRAFFIC SIGNS, TYPE A	675.20	-
									BEGIN OPTION ITEMS		
						150	150	M	FLANGED CHANNEL SIGN POST	675.301	-
						150	150	M	SQUARE TUBE SIGN POSTS AND ANCHOR	675.341	-
									END OPTION ITEMS		
						38	38	EA	REMOVING SIGNS	675.50	-
						5	5	EA	ERECTING SALVAGED SIGNS	675.60	-

DETAILED SUMMARY OF QUANTITIES

QUANTITIES	UNIT	ITEMS

DETAILED SUMMARY OF QUANTITIES

QUANTITIES	UNIT	ITEMS

PROJECT NAME: HIGHGATE - FRANKLIN
PROJECT NUMBER: STP RS 0301(1) SA

FILE NAME: ...85c060/design/dc060frm.dgn
PROJECT LEADER: DELLASANTA
DESIGNED BY: SQUAD B
IPARM FILE NAME: dc060qs7.i

PLOT DATE: 09-MAY-2005
DRAWN BY: SQUAD B
CHECKED BY: SQUAD B
SHEET 11 OF 450

STATE OF VERMONT
AGENCY OF TRANSPORTATION

DRAINAGE DETAIL SHEET

Metric

STATION km + m	STATION km + m	POS.	ASKEW no. deg.	INLET/OUTLET TYPE INLET	INLET/OUTLET TYPE OUTLET	DITCH IN	DITCH OUT	PIPE ARCH SPAN mm	PIPE ARCH RISE mm	PIPE ARCH L m	PIPE D mm	PIPE L m	ALLOWABLE OPTIONS PCCSP mm	ALLOWABLE OPTIONS CAAP mm	ALLOWABLE OPTIONS RCP CL	ALLOWABLE OPTIONS CSP mm	ALLOWABLE OPTIONS CPEP mm	ALLOWABLE OPTIONS PCCSP PI mm	PIPE ELBOW no. deg.	ES ea	CB ea	PCCD I	DEPTH DI mm	CONC CLASS B m³	REINF STEEL kg	DI GRATE type	CHAN ELEV ea	CRM m³	TRENCH EXCAVATION EARTH m³	TRENCH EXCAVATION ROCK m³	COMM EXC m³	UNC CHAN EXC m³	STRUCT EXCAV m³	GRAN BKFILL STRUCT m³	GRAN BORR m³	EROS MATT m²	STONE FILL m²	STONE FILL type	MARKER POSTS LT ea	MARKER POSTS RT ea	REMARKS
(HIGHGATE)																																								
1+013		CL	81°29'41"RT	DI							450	22	1.63	1.52			X						1050	1.39	70	A			31					9			1	II	1	1	1.2m x 1.2m DI
1+071.878	1+086.700	RT									450	15				1.63												16					7							
1+147.539	1+171.190	RT									450	26				1.63												21					12							
1+193.930	1+260	RT									450	68				1.63												68					29							
1+339.073	1+349.314	LT									450	11				1.63												6					5							
1+407.263	1+420.325	RT									450	14				1.63												9					6							
1+423.900	1+433.655	RT									450	10				1.63												8					5							
1+477.353	1+489.799	LT									450	13				1.63												6					6							
1+493.928	1+504.252	RT									450	11				1.63												11					5							
1+558.358	1+569.659	LT									450	12				1.63												7					5							
1+610		CL																										35												REMOVE EXISTING 460mm CGMP
1+615		CL	43°00'50"LT	CH	CH						900	24	2.01	1.91			X										2.00	66					13			6	II			
1+763		CL	83°12'33"LT	DI							450	20	1.63	1.52			X						1650	2.03	107	A			65					9			1	II	1	1	1.2m x 1.2m DI
1+765.000		CL																										16												REMOVE EXISTING 380 CGMP
1+828.382	1+841.298	RT									450	13				1.63												13					6							
1+853		CL	82°49'21"LT	MES							450	19	1.63	1.52			X			1								33					9			1	II	1	1	REMOVE EXISTING 250 CGMP
1+914.757	1+925.148	LT									450	11				1.63												12					5							
2+217.250		CL																																						SEE BRIDGE DETAILS
2+483		CL																																						SEE BRIDGE DETAILS
2+496.278	2+512.020	RT									450	16				1.63												10					6							
2+636		CL	-	CH	CH						750	19	2.01	1.91			X										1.80	50					10			5	II			REMOVE EXISTING 460 CMP
2+847		CL	82°04'47"LT	CH	CH						750	18	2.01	1.91			X										1.80	49					12			5	II			REMOVE EXISTING 380 CMP
3+031.285	3+048.064	RT									450	17				1.63												24					8							
3+033.447	3+045.965	RT																										11												
3+062.143	3+074.791	LT									450	13				1.63												19					6							REMOVE EXIST. 380mm CGMP AND 205mm PLASTIC
3+148.500		CL																																						SEE BRIDGE DETAILS
3+340		CL	-	CH							600	21	1.63	1.52			X										0.70	28					10			3	II	1	1	REMOVE EXISTING DRIVE PIPE
3+348		CL																										11												REMOVE EXISTING 300mm x 900mm CGMP
3+486		CL	75°37'27"LT	CH	CH						900	22	2.01	1.91			X										2.00	68					12			6	II			
3+488		CL																										44												REMOVE EXISTING 600mm ACCGMP
3+627.500		CL																																						SEE BRIDGE DETAILS
3+765.755	3+776.568	LT									450	11				1.63												9					5							REMOVE EXIST. 205mm PLASTIC FIELD CULVERT
3+770.340	3+773.440	LT																										1												REMOVE EXIST. 205mm PLASTIC FIELD CULVERT
3+838.491	3+850.923	RT									450	13				1.63												8					6							
3+854		CL																										10												REMOVE EXISTING 380mm CMP
4+083.769	4+093.699	RT									450	10				1.63												10					7.1							
4+118.968	4+129.474	RT									450	11				1.63												5					5							
4+340	4+380.520	RT		DI							450	41	1.63	1.52			X						1650	2.03	107	A			72					18			4	II			1.2m x 1.2m DI
4+384.758	4+395.745	LT									450	11				1.63												12					5							
FRANKLIN	TOWN LINE																																							
TOTALS											450	102	1.63	1.52			X			1				5.45	284	3-A	8.30	864					234			32	II	4	4	
											450	306				1.63																								
											600	21	1.63	1.52			X																							
											750	37	2.01	1.91			X																							
											900	46	2.01	1.91			X																							

PROJECT NAME:	HIGHGATE - FRANKLIN
PROJECT NUMBER:	STP RS 0301(1) SA
FILE NAME:	...85c060/design/dc060frm.dgn
PROJECT LEADER:	DELLASANTA
DESIGNED BY:	SQUAD B
DRAINAGE DETAIL SHEET #1	
PLOT DATE:	04/07/2005
DRAWN BY:	SQUAD B
CHECKED BY:	SQUAD B
SHEET	12 OF 450

STATE OF VERMONT
AGENCY OF TRANSPORTATION

DRAINAGE DETAIL SHEET

Metric

STATION km + m	STATION km + m	POS.	ASKEW no. deg.	INLET/OUTLET TYPE INLET	INLET/OUTLET TYPE OUTLET	DITCH IN	DITCH OUT	PIPE ARCH SPAN mm	PIPE ARCH RISE mm	PIPE ARCH L m	PIPE D mm	PIPE L m	ALLOWABLE OPTIONS PCCSP mm	ALLOWABLE OPTIONS CAAP mm	ALLOWABLE OPTIONS RCP CL	ALLOWABLE OPTIONS CSP mm	ALLOWABLE OPTIONS CPEP SL mm	ALLOWABLE OPTIONS PCCSP PI mm	PIPE ELBOW no. deg.	ES ea	CB ea	PRCCDI	DEPTH DI mm	CONC CLASS B m³	REINF STEEL kg	DI GRATE type	CHAN ELEV ea	CRM m³	TRENCH EXCAVATION EARTH m³	TRENCH EXCAVATION ROCK m³	COMM EXC m³	UNC CHAN EXC m³	STRUCT EXCAV m³	GRAN BKFILL STRUCT m³	GRAN BORR m³	EROS MATT m²	STONE FILL m³	STONE FILL type	MARKER POSTS LT ea	MARKER POSTS RT ea	REMARKS
(FRANKLIN)																																								
4+410.728	4+426.844	RT									450	15				1.63												16					7							
4+492		CL	-	MES							600	19	1.63	1.52			X			1								41					10			2	II	1	1	REMOVE EXISTING 300mm CGMP
4+840	4+879.624	RT		DI							450	40	1.63	1.52			X						1500	1.87	103	A			100					17			3	II			1.2m x 1.2m DI
4+881.910		CL																											16												REMOVE EXISTING 380mm CGMP
5+022		CL																											36												REMOVE EXISTING 380mm RCP
5+027		CL	72^22'16"LT	CH	CH						1050	21	2.77	2.67														2.20	82					12			8	II			
5+156		CL	-	CH	CH						900	22	2.01	1.91			X											2.00	69					12			6	II			
5+162		CL																											15												REMOVE EXISTING 380mm CMP
5+155.718	5+164.296	LT																											9												REMOVE EXISTING 380mm CMP
5+258.373	5+268.375	RT									450	10				1.63												4					5					1		
21+007.951		LT		DI							450	29	1.63	1.52			X						1050	1.62	80	D			51					13			1	II	1	1	1.2m x 1.2m REINFORCED CONCRETE DI WITH VERTICAL CURB
22+070		CL	-	DI	DI						450	10	1.63	1.52	III		X						1050	1.39	70	A			21					4					1		1.2m x 1.2m DI
22+070		RT		DI							450	8	1.63	1.52			X						1050	1.39	70	A			18					4			1	II	1	1	1.2m x 1.2m DI
5+729.850	5+741.890	LT																											15.3												REMOVE EXISTING 300mm CGMP
5+760.630	5+766.730	LT																											5.9												REMOVE EXISTING 300mm CGMP
5+843		CL	56^10'08"LT	MES							600	26	1.63	1.52			X			1									37					13			3	II	1	1	
5+848		CL																											12												REMOVE EXISTING 300mm ACCGMP
6+145.503	6+153.988	RT									450	9				1.63													7					4							
6+189.250		CL																																							SEE BRIDGE DETAILS
6+322		CL	79^36'24"LT	CH	CH						900	25	2.01	1.91			X											2.00	40					14			6	II			
6+323.438		CL																											16												REMOVE EXISTING 360mm CGMP
6+505.003	6+518.271	LT									450	14				1.63													12					6							
6+533.829	6+549.148	LT									450	16				1.63													25					7							REMOVE EXISTING 380mm CMP W/ HEADWALL
6+562.763		CL																											14												REMOVE EXISTING 460mm ACCGMP
6+566		CL	47^50'26"	CH	CH						1050	35	2.77	2.67														2.20	159					21			8	II			
6+652.920	6+663.283	LT									450	12				1.63													12					6							REMOVE EXISTING 300mm CGMP
6+767.294	6+779.178	LT									450	12				1.63													12					6							
6+832.445	6+846.560	LT									450	14				1.63													12	4				7							
7+023.083	7+036.605	LT									450	12				1.63													12					6							
7+161		CL																											8												REMOVE EXISTING 300mm ACCGMP
7+243		CL																											14												REMOVE EXISTING 300mm ACCGMP
7+306		CL		CH	CH						900	19	2.01	1.91			X											2.00	74					11			6	II			REMOVE EXISTING 300mm ACCGMP
7+533		CL																											19												REMOVE EXISTING 460mm ACCGMP
7+540		CL		DI							600	17	1.63	1.52			X						1650	2.63	129	2-A			61					8			2	II	1	1	1.2m x 1.8m DI
7+608.912	7+621.561	LT																											5.7												REMOVE EXISTING 300mm ACCGMP
7+636		CL	-	DI							600	16	1.63	1.52			X						1950	3.06	155	2-A			56					8			2	II	1	1	1.2m x 1.8m DI
7+663		CL																											6												REMOVE EXISTING 300mm ACCGMP
7+800		CL	-	DI							750	16	2.01	1.91			X						1950	3.01	171	2-A			65					9			2	II			1.2m x 1.8m DI
7+810		CL																											12												REMOVE EXISTING 300mm CGMP
7+833		CL																											8												REMOVE EXISTING 300mm CGMP
7+920		CL	-	DI							600	16	1.63	1.52			X						1950	3.06	155	2-A			45					8			2	II	1	1	1.2m x 1.8m DI
8+055.591	8+069.440	LT									450	14				1.63													23					7							REMOVE EXISTING 205mm CIP
TOTALS											450	128				1.63				2			18.03	933	11-A		10.4	1239	4				225			52	II	7	9	
											450	10	1.63	1.52	III		X								1-D															
											450	77	1.63	1.52			X																									
											600	94	1.63	1.52			X																									
											750	16	2.01	1.91			X																									
											900	66	2.01	1.91			X																									
											1050	66	2.01	1.91			X																									

PROJECT NAME: HIGHGATE - FRANKLIN
PROJECT NUMBER: STP RS 0301(1) SA

FILE NAME: ...85c060/design/dc060frm.dgn
PROJECT LEADER: DELLASANTA
DESIGNED BY: SQUAD B
DRAINAGE DETAIL SHEET #2

PLOT DATE: 04/07/2005
DRAWN BY: SQUAD B
CHECKED BY: SQUAD B
SHEET 13 OF 450

STATE OF VERMONT
AGENCY OF TRANSPORTATION

DRAINAGE DETAIL SHEET

Metric

STATION km + m	STATION km + m	POS.	ASKEW no. deg.	INLET/OUTLET TYPE INLET	OUTLET	DITCH IN	OUT	PIPE ARCH SPAN mm	RISE mm	L m	PIPE D mm	L m	ALLOWABLE OPTIONS PCCSP mm	CAAP mm	RCP CL	CSP mm	CPEP SL mm	PCCSP PI mm	PIPE ELBOW no. deg.	ES ea	CB ea	Pnccoi	DEPTH DI mm	CONC CLASS B m^3	REINF STEEL kg	DI GRATE type	CHAN ELEV ea	CRM m^3	TRENCH EXCAVATION EARTH m^3	ROCK m^3	COMM EXC m^3	UNC CHAN EXC m^3	STRUCT EXCAV m^3	GRAN BKFILL STRUCT m^3	GRAN BORR m^3	EROS MATT m^2	STONE FILL m^3	type	MARKER POSTS LT ea	RT ea	COLLAR ea		REMARKS
8+086		CL	86^26'29"RT								450	18	1.63	1.52			X												42					8			2	II	1	1			REMOVE EXISTING 380mm RCP
8+108.430	8+120.060	LT																											13														REMOVE EXISTING 380mm RCP
8+303.930		CL	-	DI							600	20	1.63	1.52			X						1950	2.36	124	A			98					10			2	II	1	1			1.2m x 1.2m DI
8+307.675	8+316.281	LT																											11														REMOVE EXISTING 460mm CGMP
8+346.329	8+360.996	LT									450	15				1.63													19					7									
8+407.474	8+420.658	LT									450	13				1.63													11					6									REMOVE EXISTING 300mm CGMP
8+455		CL	-	CH							750	23	2.01	1.91			X											0.90	55					12			2	II					REMOVE EXISTING 460mm CGMP
8+744.500		CL																																									SEE BRIDGE DETAILS
8+758.930	8+770.452	RT									450	12				1.63													3					6									
8+853.649	8+865.862	LT									600	12				1.63													6					6									
9+241		CL																											21														REMOVE EXISTING 610mm CGMP
9+250		CL	30^53'21"LT	DI							750	41	2.01	1.91			X						1800	2.79	160	2-A			116					22			2	II					1.2m x 1.8m DI
9+258		CL																											31														REMOVE EXISTING 610mm AACGMP
9+267.634		CL	54^47'34"LT	DI							450	14	1.63	1.52	III		X						1350	1.71	89	D			33					6									1.2m X 1.2m DI
ah14+759		CL																											24														REMOVE EXISTING 460mm CGMP
ah14+800		CL									450	16	1.63	1.52			X												38					6									
ah14+800	ah14+858	RT		DI							450	60	1.63	1.52			X						1800	2.43	118	D			100					26									1.2m x 1.2m DI
ah14+802.242	ah14+809.578	LT																											5														REMOVE EXISTING PIPE
ah14+851.283	ah14+856.947	RT																											9														REMOVE EXISTING 300mm CMP
ah14+921.900	ah14+932	RT																											17														REMOVE EXISTING 300mm CGMP
ah14+960		CL																											9.5														REMOVE EXISTING 300mm CMP
ah15+011	ah15+034	RT		DI							450	23	1.63										1800	2.43	118	D			42					10							1		REINFORCED CONCRETE DI W/ VERTICAL CURB CONNECT TO EXISTING PIPE FROM PROJECT STP 0301(18)
TOTALS											450	94	1.63	1.52			X						11.72	609	3-A		.9	694					125			8	II	2	2	1		
											450	23	1.63												3-D																	
											450	40				1.63																											
											450	14	1.63	1.52	III		X																									
											600	12				1.63																											
											600	20	1.63	1.52			X																									
											750	64	2.01	1.91			X																									

PROJECT NAME:	HIGHGATE - FRANKLIN
PROJECT NUMBER:	STP RS 0301(1) SA
FILE NAME:	...85c060/design/dc060frm.dgn
PROJECT LEADER:	DELLASANTA
DESIGNED BY:	SQUAD B
DRAINAGE DETAIL SHEET #3	
PLOT DATE:	04/07/2005
DRAWN BY:	SQUAD B
CHECKED BY:	SQUAD B
SHEET	14 OF 450

STATE OF VERMONT
AGENCY OF TRANSPORTATION

ITEM DETAIL SHEET

VAOT Metric

GUARD RAIL

BEGIN STATION km + m	END STATION km + m	POSITION LEFT m	POSITION RIGHT m	END TREATMENT BEGIN EA	END TREATMENT END EA
HIGHGATE					
1+553.949	1+627.842		72.39	ANC	ANC
1+617.592	1+676.911	64.77		ANC	ANC
1+738.052	1+832.478	53.34		ANC	ANC
1+849.622	1+915.719	60.96		ANC	ANC
2+193.827	2+228.118	34.29		MTS	MTS
2+209.121	2+220.551		53.31	MTS	MTS
2+434.922	2+503.821		41.91	ANC	ANC
2+472.326	2+532.701	60.96		ANC	ANC
2+633.813	2+637.623		3.81	MTS	MTS
2+633.813	2+637.623	3.81		MTS	MTS
2+831.421	2+854.221		22.86	MTS	MTS
2+831.421	2+854.221	22.86		MTS	MTS
3+119.979	3+161.383	41.80		MTS	MTS
3+139.983	3+162.784		22.86	MTS	MTS
3+612.857	3+647.057	34.20		MTS	MTS
3+615.198	3+683.597		68.40	MTS	MTS
TOTAL		376.99	285.54	10	10

UNDERDRAIN

BEGIN STATION km + m	END STATION km + m	TYPE	POSITION	DIA. mm	LENGTH m	TRENCH EARTH m^3	TRENCH ROCK m^3	GRAN BKFILL m^3	FB EA	MKR PST EA
HIGHGATE										
1+040	1+100	U	LT	200	60	37.0			1	
1+040	-	C	CL	200	14	1.0			1	1
1+040	1+100	U	RT	200	60	26.0			1	
1+640	1+700	U	RT	200	60	41.0	4		1	
1+640	-	C	CL	200	13	6.0				1
1+700	1+740	U	RT	200	40	21.0	8		2	
1+740	-	C	CL	200	13	5.0				1
1+800	1+840	U	RT	200	40	29.0			1	
1+800	1+840	U	LT	200	40	30.0			1	
1+840	-	C	CL	200	14	6.0			1	1
1+860	1+980	U	RT	200	120	109.0			1	
1+860	2+000	U	LT	200	140	127.0			1	
1+860	-	C	CL	200	13	6.0			1	1
2+080	2+180	U	RT	200	100	59.0			1	
2+180	-	C	RT	200	6	1.0			1	1
2+240	2+250	C	LT	200	12	2.0				1
2+250	2+340	U	LT	200	90	66.0			2	
2+300	2+420	U	RT	200	120	117.0			1	
2+420	-	C	RT	200	6	2.0			1	1
2+540	2+580	U	RT	200	40	28.0			1	
2+540	2+580	U	LT	200	40	28.0			1	
2+540	-	C	CL	200	13	5.0			1	1
2+680	2+740	U	LT	200	60	36.0			1	
2+680	-	C	LT	200	4	1.0			1	1
2+860	2+960	U	RT	200	100	68.0			1	
2+860	2+960	U	LT	200	100	67.0			1	
2+960	3+060	U	LT	200	100	78.0				
2+960	3+120	U	RT	200	160	107.0			2	
TOTAL						1107	12		27	10

BEGIN STATION km + m	END STATION km + m	POSITION LEFT m	POSITION RIGHT m	REMARKS

BEGIN STATION km + m	END STATION km + m	POSITION LEFT m	POSITION RIGHT m	REMARKS

BEGIN STATION km + m	END STATION km + m	POSITION LEFT m	POSITION RIGHT m	REMARKS

PROJECT NAME: HIGHGATE - FRANKLIN
PROJECT NUMBER: STP RS 0301(1) SA

FILE NAME: ...85c060/design/dc060frm.dgn PLOT DATE: 09-MAY-2005
PROJECT LEADER: DELLASANTA DRAWN BY: SQUAD B
DESIGNED BY: SQUAD B CHECKED BY: SQUAD B
IPARM FILE NAME: dc0601dl.i SHEET 15 OF 450

STATE OF VERMONT
AGENCY OF TRANSPORTATION

ITEM DETAIL SHEET

MAY Metric

GUARD RAIL

BEGIN STATION km + m	END STATION km + m	POSITION LEFT m	POSITION RIGHT m	END TREATMENT BEGIN EA	END TREATMENT END EA

UNDERDRAIN

BEGIN STATION km + m	END STATION km + m	TYPE	POSITION	DIA. mm	LENGTH m	TRENCH EARTH m^3	TRENCH ROCK m^3	GRAN BKFILL m^3	FB EA	MKR PST EA
2+860	-	C	LT	200	5	1.0			1	1
2+860	-	C	RT	200	5	1.0			1	1
3+060	-	C	CL	200	8	5.0			1	
3+120	3+140	C	RT	200	21	6.0			1	1
3+180	3+244	U	LT	200	64	41.0			1	
3+180	-	C	LT	200	6	1.0			1	1
3+380	3+480	U	LT	200	100	67.0			1	
3+480	-	C	LT	200	6	2.0				1
3+540	3+580	U	LT	200	40	25.0			1	
3+548	3+580	U	RT	200	32	17.0			1	
3+580	-	C	LT	200	6	1.0			1	1
3+580	3+600	C	RT	200	21	0.0			1	1
3+660	4+220	U	LT	200	560	1317			2	
3+680	4+220	U	RT	200	540	994			5	
4+240	4+300	U	LT	200	60	51.0	20.0		1	
4+240	-	C	LT	200	6	2.0			1	1
4+300	4+354	U	LT	200	54	57.0			1	
4+320	4+400	U	RT	200	80	58.0			2	
4+354	-	C	LT	200	4	2.0			1	1
SHEET 1						1107	12		27	10
SHEET 2						2650	20		24	9
TOTAL						3757	32		51	19

BEGIN STATION km + m	END STATION km + m	POSITION LEFT m	POSITION RIGHT m	REMARKS

BEGIN STATION km + m	END STATION km + m	POSITION LEFT m	POSITION RIGHT m	REMARKS

BEGIN STATION km + m	END STATION km + m	POSITION LEFT m	POSITION RIGHT m	REMARKS

PROJECT NAME: HIGHGATE - FRANKLIN
PROJECT NUMBER: STP RS 0301(1) SA

FILE NAME: ...85c060/design/dc060frm.dgn PLOT DATE: 09-MAY-2005
PROJECT LEADER: DELLASANTA DRAWN BY: SQUAD B
DESIGNED BY: SQUAD B CHECKED BY: SQUAD B
IPARM FILE NAME: dc0601d2.i SHEET 16 OF 450

STATE OF VERMONT
AGENCY OF TRANSPORTATION

ITEM DETAIL SHEET

Metric

GUARD RAIL

BEGIN STATION km + m	END STATION km + m	POSITION LEFT m	POSITION RIGHT m	END TREATMENT BEGIN EA	END TREATMENT END EA
FRANKLIN					
4+476.314	4+798.788	22.86		ANC	ANC
4+488.749	4+496.130		7.62	ANC	ANC
5+013.312	5+047.532	34.29		MTS	MTS
5+024.731	5+042.267		15.24	MTS	ANC
6+151.067	6+230.803	80.01		ANC	ANC
6+151.957	6+229.209		80.01	ANC	ANC
6+901.097	7+360		350.52	MTS	MTS
7+508.500	7+564.670		57.15	ANC	ANC
7+778.896	8+460.696		681.99	MTS	MTS
8+688.330	8+761.548		76.20	ANC	ANC
8+706.935	8+790.420	83.82		ANC	ANC
8+900.047	9+176.885	278.13		MTS	MTS
8+903.848	9+120.048		217.17	MTS	MTS
TOTAL		499.11	1485.90	6	5

UNDERDRAIN

BEGIN STATION km + m	END STATION km + m	TYPE	POSITION	DIA. mm	LENGTH m	TRENCH EARTH m^3	TRENCH ROCK m^3	GRAN BKFILL m^3	FB EA	MKR PST EA
FRANKLIN										
4+400	4+460	U	RT	200	60	36.0				
4+460	-	C	RT	200	4	1.0				1
4+900	5+020	U	RT	200	120	89.0			1	
5+020	-	C	RT	200	5	1.0				1
5+040	5+140	U	RT	200	100	56.0			1	
5+140	-	C	RT	200	6	1.0				1
5+140	-	C	LT	200	6	1.0				1
5+060	5+140	U	LT	200	80	50.0			1	
5+160	-	C	LT	200	7	1.0				1
5+160	5+280	U	LT	200	120	82.0			1	
5+460	-	C	CL	200	14	2.0				1
5+460	5+480	U	RT	200	20	6.0			1	
5+500	5+560	U	LT	200	60	37.0			1	
5+560	5+580	C	LT	200	20	8.0			1	1
5+780	5+820	U	LT	200	40	23.0			1	
5+780	5+820	U	RT	200	40	22.0			1	
5+820	-	C	CL	200	14	6.0				1
5+980	-	C	CL	200	12	2.0				1
5+980	6+040	U	LT	200	60	27.0	5.0		1	
5+980	6+040	U	RT	200	60	14.0	18.0		1	
6+220	-	C	CL	200	12	2.0				1
6+220	6+280	U	LT	200	60	32.0			1	
6+220	6+280	U	RT	200	60	32.0			1	
6+640	-	C	LT	200	4	0.0				1
6+640	7+040	U	LT	200	400	165.0	24.0		4	
6+880		C	CL	200	15	6.0				1
7+040	7+220	U	LT	200	180	42.0			2	
7+220	-	C	CL	200	12	1.0				1
7+380	-	C	CL	200	12	4.0				1
TOTAL						752	47		19	14

BEGIN STATION km + m	END STATION km + m	POSITION LEFT m	POSITION RIGHT m	REMARKS

BEGIN STATION km + m	END STATION km + m	POSITION LEFT m	POSITION RIGHT m	REMARKS

BEGIN STATION km + m	END STATION km + m	POSITION LEFT m	POSITION RIGHT m	REMARKS

PROJECT NAME: HIGHGATE - FRANKLIN
PROJECT NUMBER: STP RS 0301(1) SA

FILE NAME: ...85c060/design/dc060frm.dgn
PROJECT LEADER: DELLASANTA
DESIGNED BY: SQUAD B
IPARM FILE NAME: dc0601d3.i

PLOT DATE: 09-MAY-2005
DRAWN BY: SQUAD B
CHECKED BY: SQUAD B
SHEET 17 OF 450

STATE OF VERMONT
AGENCY OF TRANSPORTATION

ITEM DETAIL SHEET

Metric

GUARD RAIL

BEGIN STATION km + m	END STATION km + m	POSITION LEFT m	POSITION RIGHT m	END TREATMENT BEGIN EA	END TREATMENT END EA

UNDERDRAIN

BEGIN STATION km + m	END STATION km + m	TYPE	POSITION	DIA. mm	LENGTH m	TRENCH EARTH m^3	TRENCH ROCK m^3	GRAN BKFILL m^3	FB EA	MKR PST EA
7+380	7+420	U	LT	200	40	29.0			1	
7+420	7+540	U	LT	200	120	80.0			2	
7+540	7+636	U	LT	200	96	69.0			1	
7+636	7+740	U	LT	200	104	76.0			1	
7+740	7+800	U	LT	200	60	44.0			1	
7+800	7+920	U	LT	200	120	80.0			1	
7+920	8+020	U	LT	200	100	59.0			1	
8+020	-	C	CL	200	12	5.0				1
8+120	8+302.93	U	LT	200	182.93	118			2	
8+302.93	8+371.60	U	LT	200	69	47			1	
8+280.01	8+371.60	U	RT	200	92	50.0			1	
8+372	-	C	CL	200	12	4.0				1
8+480	-	C	CL	200	13	4.0				1
8+480	8+560	U	LT	200	80	50.0			1	
8+560	8+640	U	LT	200	80	48.0			1	
8+480	8+580	U	RT	200	100	70.0			1	
8+580	8+640	U	RT	200	60	32.0			1	
8+640	-	C	CL	200	14	1.0				1
8+746	-	C	RT	200	5	0.0				1
8+746	8+800	U	RT	200	54	1.0			1	
8+800	-	C	LT	200	5	1.0				1
8+800	8+880	U	LT	200	80	53.0			1	
9+200	-	C	LT	200	6	1.0				1
9+200	9+258	U	LT	200	58	22.0			1	
9+220	-	C	CL	200	8	3.0				
TOTAL						946	0		19	7

BEGIN STATION km + m	END STATION km + m	POSITION LEFT m	POSITION RIGHT m	REMARKS

BEGIN STATION km + m	END STATION km + m	POSITION LEFT m	POSITION RIGHT m	REMARKS

BEGIN STATION km + m	END STATION km + m	POSITION LEFT m	POSITION RIGHT m	REMARKS

PROJECT NAME: HIGHGATE - FRANKLIN
PROJECT NUMBER: STP RS 0301(1) SA

FILE NAME: ...85c060/design/dc060frm.dgn PLOT DATE: 09-MAY-2005
PROJECT LEADER: DELLASANTA DRAWN BY: SQUAD B
DESIGNED BY: SQUAD B CHECKED BY: SQUAD B
IPARM FILE NAME: dc0601d4.i SHEET 18 OF 450

STATE OF VERMONT
AGENCY OF TRANSPORTATION

ITEM DETAIL SHEET

VAOT Metric

GUARD RAIL

BEGIN STATION km + m	END STATION km + m	POSITION LEFT m	POSITION RIGHT m	END TREATMENT BEGIN EA	END TREATMENT END EA

UNDERDRAIN

BEGIN STATION km + m	END STATION km + m	TYPE	POSITION	DIA. mm	LENGTH m	TRENCH EARTH m^3	TRENCH ROCK m^3	GRAN BKFILL m^3	FB EA	MKR PST EA
9+220	ahl4+780	U	RT	200	217	152.0			2	
ahl4+800	ahl4+840	U	RT	200	40	28.0			1	
ahl4+858	ahl4+940	U	RT	200	82	60.0			1	
ahl4+940	ahl5+011	U	RT	200	71	52.0			1	
ahl5+011	ahl5+034	U	RT	200	23	11.0				
SHEET 3						752	47		19	14
SHEET 4						946	0		19	7
SHEET 5						303	0		5	0
TOTAL						2001	47		43	21

BEGIN STATION km + m	END STATION km + m	POSITION LEFT m	POSITION RIGHT m	REMARKS

BEGIN STATION km + m	END STATION km + m	POSITION LEFT m	POSITION RIGHT m	REMARKS

BEGIN STATION km + m	END STATION km + m	POSITION LEFT m	POSITION RIGHT m	REMARKS

PROJECT NAME: HIGHGATE - FRANKLIN
PROJECT NUMBER: STP RS 0301(1) SA

FILE NAME: ...85c060/design/dc060frm.dgn PLOT DATE: 09-MAY-2005
PROJECT LEADER: DELLASANTA DRAWN BY: SQUAD B
DESIGNED BY: SQUAD B CHECKED BY: SQUAD B
IPARM FILE NAME: dc0601d5.i SHEET 19 OF 450

STATE OF VERMONT
AGENCY OF TRANSPORTATION

EARTHWORKS

Metric

STATION km + m	DIST m	TOTAL EXCAVATION EARTH AND ROCK AREA m²	TOTAL EXCAVATION EARTH AND ROCK VOLUME m³	ROCK EXCAVATION AREA m²	ROCK EXCAVATION VOLUME m³	EMBANKMENT AREA m²	EMBANKMENT VOLUME m³	AREA m²	VOLUME m³
HIGHGATE									
1+000		0.0				0			
	20		0				220		
1+020		0.0				22			
	20		13				363		
1+040		1.3				14.4			
	20		89				184		
1+060		7.5				4			
	20		176				40		
1+080		10.0				0			
	20		133				33		
1+100		3.2				3.3			
	20		46				83		
1+120		1.4				4.9			
	20		14				197		
1+140		0.0				14.8			
	20		0				307		
1+160		0.0				15.9			
	20		8				267		
1+180		0.8				10.7			
	20		8				156		
1+200		0.0				4.8			
	20		0		5.2		130		
1+220		0.0		0.5		8.2			
	20		29		5.2		243		
1+240		2.9				16.1			
	20		41				253		
1+260		1.2				9.2			
	20		12				131		
1+280		0.0				4			
	20		4				59		
1+300		0.4				1.9			
	20		19				32		
1+320		1.5				1.3			
	20		39				40		
1+340		2.4				2.8			
	20		51				38		
1+360		2.7				1			
	20		61				10		
1+380		3.4				0			
	20		77				0		
1+400		4.3				0.6			
	20		77				21		
1+420		3.4				1.5			
	20		52				21		
1+440		1.8				0.7			
	20		40				38		
1+460		2.2				3.2			
	20		47				32		
1+480		2.5				0			
	20		57				0		
1+500		3.2				0			
								C=	1093
								F=	2898
								R=	10
								FR=	0.495
								FF=	1.15
TOTALS			1093		10		2898	EXF=	2235

STATION km + m	DIST m	TOTAL EXCAVATION EARTH AND ROCK AREA m²	TOTAL EXCAVATION EARTH AND ROCK VOLUME m³	ROCK EXCAVATION AREA m²	ROCK EXCAVATION VOLUME m³	EMBANKMENT AREA m²	EMBANKMENT VOLUME m³	AREA m²	VOLUME m³
1+500		3.2				0			
	20		61				3		
1+520		2.9				0.3			
	20		53				34		
1+540		2.4				3.2			
	20		27				57		
1+560		0.3				2.5			
	20		52				52		
1+580		4.9				2.7			
	20		71				33		
1+600		2.2				0.7			
	20		35				8		
1+620		1.3				0.2			
	20		64				6		
1+640		5.2				0.5			
	20		140				15		
1+660		8.8				1			
	20		203				10		
1+680		11.5				0			
	20		277				0		
1+700		16.2				0			
	20		213				17		
1+720		5.1				1.7			
	20		71				115		
1+740		2.0				9.9			
	20		35				110		
1+760		1.5				1.1			
	20		23				11		
1+780		0.8				0			
	20		60				0		
1+800		5.2				0			
	20		118				20		
1+820		6.7				2			
	20		87				68		
1+840		2.1				4.8			
	20		64				48		
1+860		4.4				0			
	20		104				0		
1+880		6.0				0			
	20		221				0		
1+900		16.1				0			
	20		326				0		
1+920		16.5				0			
	20		357				0		
1+940		19.2				0			
	20		350				0		
1+960		15.8				0			
	20		248				2		
1+980		9.0				0.2			
	20		110				48		
2+000		2.0				4.7			
								C=	3370
								F=	657
								R=	0
								FR=	0.495
								FF=	1.15
TOTALS			3370		0		657	EXC=	2615

STATION km + m	DIST m	TOTAL EXCAVATION EARTH AND ROCK AREA m²	TOTAL EXCAVATION EARTH AND ROCK VOLUME m³	ROCK EXCAVATION AREA m²	ROCK EXCAVATION VOLUME m³	EMBANKMENT AREA m²	EMBANKMENT VOLUME m³	AREA m²	VOLUME m³
2+000		2.0				4.7			
	20		48				75		
2+020		2.8				2.8			
	20		28				30		
2+040		0.0				0.2			
	20		22				7		
2+060		2.2				0.5			
	20		62				27		
2+080		4.1				2.1			
	20		78				39		
2+100		3.7				1.7			
	20		66				37		
2+120		2.9				1.9			
	20		105				118		
2+140		7.7				9.9			
	20		93				241		
2+160		1.6				14.2			
	20		20				297		
2+180		0.4				15.5			
	20		13				303		
2+200		0.8				14.8			
	20		26				280		
2+220		1.8				13.2			
	20		99				184		
2+240		8.1				5.2			
	20		104				52		
2+260		2.3				0			
	20		35				0		
2+280		1.2				0			
	20		70				0		
2+300		5.7				0			
	20		152				0		
2+320		9.4				0			
	20		183				0		
2+340		8.8				0			
	20		176				0		
2+360		8.8				0			
	20		180				0		
2+380		9.2				0			
	20		166				6		
2+400		7.4				0.6			
	20		89				73		
2+420		1.5				6.8			
	20		32				336		
2+440		1.7				26.8			
	20		21				592		
2+460		0.4				32.4			
	20		12				525		
2+480		0.8				20.1			
	20		14				338		
2+500		0.6				13.7			
								C=	1894
								F=	3560
								R=	0
								FR=	0.495
								FF=	1.15
TOTALS			1894		0		3560	EXF=	2200

SUMMARY AND BALANCES

STATION TO STATION km + m	km + m	TOTAL EXC. EARTH+ROCK m³	ROCK EXCAVATION m³	EMBANKMENT m³	EXCESSES CUT	EXCESSES FILL	ACCUMULATIVE EXCESSES CUT	ACCUMULATIVE EXCESSES FILL
MAINLINE								
1+000	1+500	1093	10	2898		2235		2235
1+500	2+000	3370	0	657	2615		380	
2+000	2+500	1894	0	3560		2200		1820
2+500	3+000	2456	0	1679	525			1295
3+000	3+500	2772	0	2210	231			1064
3+500	4+000	564	0	3666		3652		4716
4+000	4+500	1818	2	2939		1561		6277
4+500	5+000	1238	28	3195		2422		8699
5+000	5+500	1269	0	4830		4286		12985
5+500	6+000	1797	6	1461	120			12865
6+000	6+500	878	18	3936		3640		16505
6+500	7+000	636	88	2751		2484		18989
7+000	7+500	964	0	3319		2853		21842
7+500	8+000	2116	0	836	1155			20687
8+000	8+500	1776	0	1924		437		21124
8+500	9+000	1863	0	4290		3071		24195
9+000	14+840	3345	0	7768		5588		29783
14+840	15+034	1564	0	536	948			28835

REMARKS

EARTH AND ROCK EXCAVATION	34841
SOLID ROCK EXCAVATION	177
EARTH EXCAVATION	34664
PLANIMETERED FILL	58423
LESS FACTORED SOLID ROCK	-177 x 1.3 = 230
LESS DISPLACEMENT OF ANY LARGE STRUCTURES	
NET PLANIMETERED FILL	58193
FACTOR	x 1.15 =
PLANIMETERED FILL INCLUDING FACTOR	66922
MATERIALS AVAILABLE FOR FILLS	
EARTH EXCAVATION	34664
CHANNEL EXCAVATION	80 x 0.65 = 52
UNDERDRAIN EXCAVATION	5757 x (0.65) = 3742
STRUCTURE EXCAVATION	1625 x (0.65) = 1056
TOTAL MATERIAL AVAILABLE FOR FILL	39514
TOTAL FILL INCLUDING FACTOR	66922
TOTAL MATERIAL FOR FILL	39514
BORROW	27408
EXCESS EXCAVATION	

PROJECT NAME: HIGHGATE - FRANKLIN
PROJECT NUMBER: STP RS 0301(1) SA

FILE NAME: ...85c060/design/dc060frm.dgn
PROJECT LEADER: DELLASANTA
DESIGNED BY: SQUAD B
IPARM FILE NAME: dc060ewl.1
PLOT DATE: 09-MAY-2005
DRAWN BY: SQUAD B
CHECKED BY: SQUAD B
SHEET 20 OF 450

STATE OF VERMONT
AGENCY OF TRANSPORTATION

EARTHWORKS

Metric

STATION km + m	DIST m	TOTAL EXCAVATION EARTH AND ROCK AREA m²	TOTAL EXCAVATION EARTH AND ROCK VOLUME m³	ROCK EXCAVATION AREA m²	ROCK EXCAVATION VOLUME m³	EMBANKMENT AREA m²	EMBANKMENT VOLUME m³	AREA m²	VOLUME m³
2+500		0.6				13.7			
	20		11				153		
2+520		0.5				1.6			
	20		85				16		
2+540		8.1				0.0			
	20		175				0		
2+560		9.4				0.0			
	20		197				7		
2+580		10.3				0.7			
	20		116				124		
2+600		1.3				11.7			
	20		38				201		
2+620		2.5				8.3			
	20		41				167		
2+640		1.6				8.4			
	20		157				163		
2+660		14.1				7.9			
	20		141				110		
2+680		0.0				3.1			
	20		3				42		
2+700		0.3				1.1			
	20		38				18		
2+720		3.5				0.7			
	20		84				26		
2+740		4.9				1.9			
	20		96				41		
2+760		4.7				2.2			
	20		84				28		
2+780		3.7				0.6			
	20		63				79		
2+800		2.6				7.3			
	20		26				191		
2+820		0.0				11.8			
	20		8				193		
2+840		0.8				7.4			
	20		18				92		
2+860		1.1				1.8			
	20		27				18		
2+880		1.6				0.0			
	20		100				5		
2+900		8.4				0.5			
	20		163				5		
2+920		7.9				0.0			
	20		142				0		
2+940		6.3				0.0			
	20		162				0		
2+960		9.9				0.0			
	20		217				0		
2+980		11.8				0.0			
	20		264				0		
3+000		14.5				0.0			
								C=	2456
								F=	1679
								R=	0
								FR=	0.495
								FF=	1.15
TOTALS			2456		0		1679	EXC=	525

STATION km + m	DIST m	TOTAL EXCAVATION EARTH AND ROCK AREA m²	TOTAL EXCAVATION EARTH AND ROCK VOLUME m³	ROCK EXCAVATION AREA m²	ROCK EXCAVATION VOLUME m³	EMBANKMENT AREA m²	EMBANKMENT VOLUME m³	AREA m²	VOLUME m³
3+000		14.5				0.0			
	20		297				0		
3+020		15.2				0.0			
	20		236				7		
3+040		8.4				0.7			
	20		132				24		
3+060		4.8				1.7			
	20		49				86		
3+080		0.0				6.9			
	20		48				167		
3+100		4.7				9.8			
	20		54				248		
3+120		0.6				15.0			
	20		16				267		
3+140		0.9				11.6			
	20		18				190		
3+160		0.9				7.3			
	20		192				74		
3+180		18.4				0.1			
	20		211				1		
3+200		2.8				0.1			
	20		61				1		
3+220		3.4				0.0			
	20		70				12		
3+240		3.7				1.2			
	20		56				45		
3+260		1.9				3.4			
	20		21				104		
3+280		0.2				7.1			
	20		22				183		
3+300		2.0				11.2			
	20		22				273		
3+320		0.2				16.1			
	20		2				284		
3+340		0.0				12.3			
	20		5				144		
3+360		0.5				2.1			
	20		53				21		
3+380		4.7				0.0			
	20		96				0		
3+400		4.9				0.0			
	20		122				0		
3+420		7.4				0.0			
	20		155				0		
3+440		8.1				0.0			
	20		370				6		
3+460		28.9				0.6			
	20		356				34		
3+480		6.7				2.8			
	20		108				39		
3+500		4.1				1.1			
								C=	2772
								F=	2210
								R=	0
								FR=	0.495
								FF=	1.15
TOTALS			2772		0		2210	EXC=	231

STATION km + m	DIST m	TOTAL EXCAVATION EARTH AND ROCK AREA m²	TOTAL EXCAVATION EARTH AND ROCK VOLUME m³	ROCK EXCAVATION AREA m²	ROCK EXCAVATION VOLUME m³	EMBANKMENT AREA m²	EMBANKMENT VOLUME m³	AREA m²	VOLUME m³
3+500		4.1				1.1			
	20		62				11		
3+520		2.1				0.0			
	20		57				3		
3+540		3.5				0.3			
	20		60				104		
3+560		2.5				10.1			
	20		27				243		
3+580		0.2				14.2			
	20		10				307		
3+600		0.8				16.5			
	20		17				333		
3+620		0.9				16.8			
	20		18				321		
3+640		1.0				15.3			
	20		17				310		
3+660		0.7				15.6			
	20		11				324		
3+680		0.4				16.8			
	20		4				270		
3+700		0.0				10.2			
	20		8				152		
3+720		0.8				5.0			
	20		8				76		
3+740		0.0				2.6			
	20		8				51		
3+760		0.8				2.5			
	20		29				58		
3+780		2.1				3.3			
	20		38				63		
3+800		1.7				3.0			
	20		19				85		
3+820		0.3				5.5			
	20		3				117		
3+840		0.1				6.2			
	20		1				135		
3+860		0.0				7.3			
	20		20				147		
3+880		2.0				7.4			
	20		40				145		
3+900		2.0				7.1			
	20		39				133		
3+920		1.9				6.2			
	20		22				117		
3+940		0.4				5.5			
	20		5				81		
3+960		0.2				2.7			
	20		13				41		
3+980		1.1				1.5			
	20		28				39		
4+000		1.7				2.4			
								C=	564
								F=	3666
								R=	0
								FR=	0.495
								FF=	1.15
TOTALS			564		0		3666	EXF=	3652

SUMMARY AND BALANCES

STATION TO STATION km + m		TOTAL EXC. EARTH+ROCK m³	ROCK EXCAVATION m³	EMBANKMENT m³	EXCESSES CUT	EXCESSES FILL	ACCUMULATIVE EXCESSES CUT	ACCUMULATIVE EXCESSES FILL
TOWN HIGHWAYS								
20+000	20+040							
21+000	21+070							
22+000	22+080	1139	0	492	573			28262
23+000	23+060							
24+000	24+046							
25+000	25+040	668	0	436	167			28095
DRIVES								
1+080	2+983	566	0	1170		780		28875
3+037	5+764	325	0	1260		1124		29999
6+024	8+309	464	25	1852		1653		31652
REV 8+352.570 TO								
AH 15+028		266	0	758		606		32258
TOTALS		34841	177	58423				33258

REMARKS

EARTH AND ROCK EXCAVATION
SOLID ROCK EXCAVATION
EARTH EXCAVATION
PLANIMETERED FILL
LESS FACTORED SOLID ROCK
LESS DISPLACEMENT OF ANY LARGE STRUCTURES
NET PLANIMETERED FILL
FACTOR
PLANIMETERED FILL INCLUDING FACTOR
MATERIALS AVAILABLE FOR FILLS
EARTH EXCAVATION
CHANNEL EXCAVATION
UNDERDRAIN EXCAVATION
STRUCTURE EXCAVATION
TOTAL MATERIAL AVAILABLE FOR FILL
TOTAL FILL INCLUDING FACTOR
TOTAL MATERIAL FOR FILL
BORROW
EXCESS EXCAVATION

PROJECT NAME: HIGHGATE - FRANKLIN
PROJECT NUMBER: STP RS 0301(1) SA

FILE NAME: ...85c060/design/dc060frm.dgn
PROJECT LEADER: DELLASANTA
DESIGNED BY: SQUAD B
IPARM FILE NAME: dc060ew2.i
PLOT DATE: 09-MAY-2005
DRAWN BY: SQUAD B
CHECKED BY: SQUAD B
SHEET 21 OF 450

STATE OF VERMONT
AGENCY OF TRANSPORTATION

EARTHWORKS

Metric

STATION km + m	DIST m	TOTAL EXCAVATION EARTH AND ROCK AREA m²	TOTAL EXCAVATION EARTH AND ROCK VOLUME m³	ROCK EXCAVATION AREA m²	ROCK EXCAVATION VOLUME m³	EMBANKMENT AREA m²	EMBANKMENT VOLUME m³	AREA m²	VOLUME m³
4+000		1.7				2.4			
	20		31				57		
4+020		1.4				3.3			
	20		22				65		
4+040		0.8				3.2			
	20		15				61		
4+060		0.7				2.9			
	20		14				57		
4+080		0.7				2.8			
	20		12				101		
4+100		0.5				7.2			
	20		6				140		
4+120		0.1				6.7			
	20		6				251		
4+140		0.6				18.4			
	20		6				474		
4+160		0.0				29.0			
	20		0				602		
4+180		0.0				31.2			
	20		0				513		
4+200		0.0				20.1			
	20		0				226		
4+220		0.0				2.5			
	20		6				25		
4+240		0.6				0.0			
	20		82				0		
4+260		7.6				0.0			
	20		154		1.1		0		
4+280		7.8		0.11		0.0			
	20		136		1.1		0		
4+300		5.8				0.0			
	20		114				0		
4+320		5.6				0.0			
	20		126				0		
4+340		7.0				0.0			
	20		141				0		
4+360		7.1				0.0			
	20		174				0		
4+380		10.3				0.0			
	20		224				0		
4+400		12.1				0.0			
FRANKLIN	20		232						
4+420		11.0				0.0			
	20		195				0		
4+440		8.5				0.0			
	20		91				20		
4+460		0.6				2.0			
	20		18				105		
4+480		1.2				8.5			
	20		13				242		
4+500		0.1				15.8			
								C=	1818
								F=	2939
								R=	2
								FR=	0.045
								FF=	1.15
TOTALS			1818		2		2939	EXF=	1561

STATION km + m	DIST m	TOTAL EXCAVATION EARTH AND ROCK AREA m²	TOTAL EXCAVATION EARTH AND ROCK VOLUME m³	ROCK EXCAVATION AREA m²	ROCK EXCAVATION VOLUME m³	EMBANKMENT AREA m²	EMBANKMENT VOLUME m³	AREA m²	VOLUME m³
4+500		0.1				15.8			
	20		19				216		
4+520		1.8				5.8			
	20		41				100		
4+540		2.3				4.2			
	20		42				101		
4+560		1.9				5.9			
	20		44				116		
4+580		2.5				5.7			
	20		25				114		
4+600		0.0				5.7			
	20		3				89		
4+620		0.3				3.2			
	20		16				138		
4+640		1.3				10.6			
	20		13				218		
4+660		0.0				11.1			
	20		2				246		
4+680		0.2				13.5			
	20		17				217		
4+700		1.6				8.2			
	20		100		14.1		105		
4+720		8.4		1.4		2.2			
	20		106		14.1		40		
4+740		2.2				1.8			
	20		26				106		
4+760		0.4				8.8			
	20		4				253		
4+780		0.0				16.5			
	20		3				367		
4+800		0.3				20.2			
	20		7				258		
4+820		0.4				5.7			
	20		30				93		
4+840		2.6				3.6			
	20		26				127		
4+860		0.0				9.1			
	20		4				129		
4+880		0.4				3.7			
	20		30				42		
4+900		2.6				0.4			
	20		74				8		
4+920		4.8				0.3			
	20		115				3		
4+940		6.8				0.0			
	20		151				0		
4+960		8.3				0.0			
	20		140				3		
4+980		5.7				0.3			
	20		200				106		
5+000		14.3				10.3			
								C=	1238
								F=	3195
								R=	28
								FR=	0.495
								FF=	1.15
TOTALS			1238		28		3195	EXF=	2422

STATION km + m	DIST m	TOTAL EXCAVATION EARTH AND ROCK AREA m²	TOTAL EXCAVATION EARTH AND ROCK VOLUME m³	ROCK EXCAVATION AREA m²	ROCK EXCAVATION VOLUME m³	EMBANKMENT AREA m²	EMBANKMENT VOLUME m³	AREA m²	VOLUME m³
5+000		14.3				10.3			
	20		151				284		
5+020		0.8				18.1			
	20		12				212		
5+040		0.4				3.1			
	20		12				31		
5+060		0.8				0.0			
	20		175				0		
5+080		16.7				0.0			
	20		341				0		
5+100		17.3				0.0			
	20		234				66		
5+120		6.0				6.6			
	20		81				215		
5+140		2.1				14.8			
	20		27				205		
5+160		0.6				5.7			
	20		6				83		
5+180		0.0				2.6			
	20		5				44		
5+200		0.5				1.8			
	20		14				34		
5+220		0.8				1.6			
	20		16				45		
5+240		0.8				2.9			
	20		17				49		
5+260		0.9				2.0			
	20		10				80		
5+280		0.1				6.0			
	20		18				172		
5+300		1.7				11.2			
	20		17				269		
5+320		0.0				15.6			
	20		0				376		
5+340		0.0				22.0			
	20		0				531		
5+360		0.0				31.1			
	20		0				670		
5+380		0.0				35.9			
	20		0				600		
5+400		0.0				24.1			
	20		0				415		
5+420		0.0				17.5			
	20		0				269		
5+440		0.0				9.4			
	20		13				137		
5+460		1.3				4.3			
	20		37				43		
5+480		2.3				0.0			
	20		83				0		
5+500		6.0				0.0			
								C=	1269
								F=	4830
								R=	0
								FR=	0.495
								FF=	1.15
TOTALS			1269		0		4830	EXF=	4286

SUMMARY AND BALANCES

STATION TO STATION km + m	km + m	TOTAL EXC. EARTH+ROCK m³	ROCK EXCAVATION m³	EMBANKMENT m³	EXCESSES CUT	EXCESSES FILL	ACCUMULATIVE EXCESSES CUT	ACCUMULATIVE EXCESSES FILL

REMARKS

EARTH AND ROCK EXCAVATION
SOLID ROCK EXCAVATION
EARTH EXCAVATION

PLANIMETERED FILL
LESS FACTORED SOLID ROCK
LESS DISPLACEMENT OF ANY LARGE STRUCTURES
NET PLANIMETERED FILL
FACTOR
PLANIMETERED FILL INCLUDING FACTOR

MATERIALS AVAILABLE FOR FILLS
EARTH EXCAVATION
CHANNEL EXCAVATION
UNDERDRAIN EXCAVATION
STRUCTURE EXCAVATION

TOTAL MATERIAL AVAILABLE FOR FILL

TOTAL FILL INCLUDING FACTOR
TOTAL MATERIAL FOR FILL
BORROW
EXCESS EXCAVATION

PROJECT NAME: HIGHGATE - FRANKLIN
PROJECT NUMBER: STP RS 0301(1) SA

FILE NAME: ...85c060/design/dc060frm.dgn
PROJECT LEADER: DELLASANTA
DESIGNED BY: SQUAD B
IPARM FILE NAME: dc060ew3.i
PLOT DATE: 09-MAY-2005
DRAWN BY: SQUAD B
CHECKED BY: SQUAD B
SHEET 22 OF 450

STATE OF VERMONT
AGENCY OF TRANSPORTATION

EARTHWORKS

Metric

STATION km + m	DIST m	TOTAL EXCAVATION EARTH AND ROCK AREA m²	TOTAL EXCAVATION EARTH AND ROCK VOLUME m³	ROCK EXCAVATION AREA m²	ROCK EXCAVATION VOLUME m³	EMBANKMENT AREA m²	EMBANKMENT VOLUME m³	AREA m²	VOLUME m³
5+500		6.0				0.0			
	20		117				0		
5+520		5.7				0.0			
	20		181				3		
5+540		12.4				0.3			
	20		193				9		
5+560		6.8				0.7			
	20		112				7		
5+580		4.4				0.0			
	20		53				0		
5+600		1.0				0.0			
	20		20				0		
5+620		1.1				0.0			
	20		23				0		
5+640		1.2				0.0			
	20		27				0		
5+660		1.5				0.0			
	20		31				0		
5+680		1.6				0.0			
	20		29				0		
5+700		1.3				0.0			
	20		26				0		
5+720		1.3				0.0			
	20		66				0		
5+740		5.3				0.0			
	20		105				0		
5+760		5.2				0.0			
	20		137				0		
5+780		8.5				0.0			
	20		192				26		
5+800		10.7				2.6			
	20		135				111		
5+820		2.9				8.5			
	20		34				208		
5+840		0.5				12.3			
	20		14				233		
5+860		0.9				11.0			
	20		19				203		
5+880		1.0				9.3			
	20		25				194		
5+900		1.5				10.1			
	20		69				202		
5+920		5.5				10.1			
	20		75				164		
5+940		2.0				6.3			
	20		21				82		
5+960		0.1				1.9			
	20		22				19		
5+980		2.1				0.0			
	20		71		6.0		0		
6+000		5.0		0.6		0.0			
								C=	1797
								F=	1461
								R=	6
								FR=	0.495
								FF=	1.15
TOTALS			1797		6		1461	EXC=	120

STATION km + m	DIST m	TOTAL EXCAVATION EARTH AND ROCK AREA m²	TOTAL EXCAVATION EARTH AND ROCK VOLUME m³	ROCK EXCAVATION AREA m²	ROCK EXCAVATION VOLUME m³	EMBANKMENT AREA m²	EMBANKMENT VOLUME m³	AREA m²	VOLUME m³
6+000		5.0		0.6		0.0			
	20		105		12		63		
6+020		5.5		0.6		6.3			
	20		69		6.0		225		
6+040		1.5				16.2			
	20		15				302		
6+060		0.0				14.0			
	20		0				218		
6+080		0.0				7.9			
	20		14				117		
6+100		1.4				3.9			
	20		14				63		
6+120		0.0				2.4			
	20		0				53		
6+140		0.0				2.9			
	20		52				169		
6+160		5.2				14.1			
	20		52				235		
6+180		0.0				9.4			
	20		0				101		
6+200		0.0				0.7			
	20		23				7		
6+220		2.3				0.0			
	20		134				0		
6+240		11.1				0.0			
	20		192				2		
6+260		8.1				0.2			
	20		104				76		
6+280		2.4				7.4			
	20		37				338		
6+300		1.3				26.4			
	20		13				496		
6+320		0.0				23.2			
	20		0				316		
6+340		0.0				8.4			
	20		3				84		
6+360		0.3				0.0			
	20		9				41		
6+380		0.6				4.1			
	20		6				76		
6+400		0.0				3.5			
	20		0				42		
6+420		0.0				0.7			
	20		18				98		
6+440		1.8				9.1			
	20		18				273		
6+460		0.0				18.2			
	20		0				325		
6+480		0.0				14.3			
	20		0				216		
6+500		0.0				7.3			
								C=	878
								F=	3936
								R=	18
								FR=	0.495
								FF=	1.15
TOTALS			878		18		3936	EXF=	3640

STATION km + m	DIST m	TOTAL EXCAVATION EARTH AND ROCK AREA m²	TOTAL EXCAVATION EARTH AND ROCK VOLUME m³	ROCK EXCAVATION AREA m²	ROCK EXCAVATION VOLUME m³	EMBANKMENT AREA m²	EMBANKMENT VOLUME m³	AREA m²	VOLUME m³
6+500		0.0				7.3			
	20		17				126		
6+520		1.7				5.3			
	20		17				195		
6+540		0.0				14.2			
	20		8				210		
6+560		0.8				6.8			
	20		37		0.8		104		
6+580		2.9		0.1		3.6			
	20		50		0.8		89		
6+600		2.1				5.3			
	20		35				176		
6+620		1.4				12.3			
	20		25				235		
6+640		1.1				11.2			
	20		18				184		
6+660		0.7				7.2			
	20		27				125		
6+680		2.0				5.3			
	20		27				114		
6+700		0.7				6.1			
	20		8				109		
6+720		0.1				4.8			
	20		2				90		
6+740		0.1				4.2			
	20		3				45		
6+760		0.2				0.3			
	20		50		43		8		
6+780		4.8		4.3		0.5			
	20		61		43		23		
6+800		1.3				1.8			
	20		23				53		
6+820		0.9				3.5			
	20		30				79		
6+840		2.1				4.4			
	20		39				108		
6+860		1.8				6.4			
	20		30				95		
6+880		1.2				3.1			
	20		22				54		
6+900		1.0				2.3			
	20		22				72		
6+920		1.2				4.9			
	20		33				133		
6+940		2.0				8.4			
	20		26				156		
6+960		0.6				7.2			
	20		14				109		
6+980		0.8				3.7			
	20		12				58		
7+000		0.4				2.1			
								C=	636
								F=	2751
								R=	88
								FR=	0.495
								FF=	1.15
TOTALS			636		88		2751	EXF=	2484

SUMMARY AND BALANCES

STATION TO STATION km + m	km + m	TOTAL EXC. EARTH+ROCK m²	ROCK EXCAVATION m³	EMBANKMENT m³	EXCESSES CUT	EXCESSES FILL	ACCUMULATIVE EXCESSES CUT	ACCUMULATIVE EXCESSES FILL

REMARKS

EARTH AND ROCK EXCAVATION
SOLID ROCK EXCAVATION
EARTH EXCAVATION

PLANIMETERED FILL
LESS FACTORED SOLID ROCK
LESS DISPLACEMENT OF ANY LARGE STRUCTURES
NET PLANIMETERED FILL
FACTOR
PLANIMETERED FILL INCLUDING FACTOR

MATERIALS AVAILABLE FOR FILLS
EARTH EXCAVATION
CHANNEL EXCAVATION
UNDERDRAIN EXCAVATION
STRUCTURE EXCAVATION

TOTAL MATERIAL AVAILABLE FOR FILL

TOTAL FILL INCLUDING FACTOR
TOTAL MATERIAL FOR FILL
BORROW
EXCESS EXCAVATION

PROJECT NAME: HIGHGATE - FRANKLIN
PROJECT NUMBER: STP RS 0301(1) SA

FILE NAME: ...85c060/design/dc060frm.dgn
PROJECT LEADER: DELLASANTA
DESIGNED BY: SQUAD B
IPARM FILE NAME: dc060ew4.i
PLOT DATE: 09-MAY-2005
DRAWN BY: SQUAD B
CHECKED BY: SQUAD B
SHEET 23 OF 450

STATE OF VERMONT
AGENCY OF TRANSPORTATION

EARTHWORKS

Metric

STATION km + m	DIST m	TOTAL EXCAVATION EARTH AND ROCK AREA m²	TOTAL EXCAVATION EARTH AND ROCK VOLUME m³	ROCK EXCAVATION AREA m²	ROCK EXCAVATION VOLUME m³	EMBANKMENT AREA m²	EMBANKMENT VOLUME m³	AREA m²	VOLUME m³
7+000		0.4				2.1			
	20		39				48		
7+020		3.4				2.7			
	20		41				90		
7+040		0.7				6.3			
	20		33				212		
7+060		2.6				14.9			
	20		31				335		
7+080		0.5				18.6			
	20		10				331		
7+100		0.5				14.5			
	20		10				211		
7+120		0.5				6.6			
	20		18				124		
7+140		1.3				5.8			
	20		38				91		
7+160		2.5				3.3			
	20		35				53		
7+180		1.0				2.0			
			0						
PT STA 7+199.062 =									
POT STA 7+199.129									
EQ = -0.067									
	19.933		78				80		
7+200		6.9				6.0			
	20		100				219		
7+220		3.1				15.9			
	20		36				279		
7+240		0.5				12.0			
	20		11				217		
7+260		0.7				9.7			
	20		18				206		
7+280		1.1				10.9			
	20		74				183		
7+300		6.3				7.4			
	20		78				126		
7+320		1.4				5.2			
	20		20				80		
7+340		0.5				2.8			
	20		10				35		
7+360		0.5				0.7			
	20		20				8		
7+380		1.5				0.1			
	20		35				2		
7+400		2.9				0.1			
	20		60				4		
7+420		3.1				0.3			
	20		40				81		
7+440		1.0				7.8			
	20		18				123		
7+460		0.8				4.5			
	20		11				78		
7+480		0.3				3.3		C=	964
	20		100				103	F=	3319
7+500		9.8				7.0		R=	0
								FR	0.495
								FF=	1.15
TOTALS			964		0		3319	EXF=	2853

STATION km + m	DIST m	TOTAL EXCAVATION EARTH AND ROCK AREA m²	TOTAL EXCAVATION EARTH AND ROCK VOLUME m³	ROCK EXCAVATION AREA m²	ROCK EXCAVATION VOLUME m³	EMBANKMENT AREA m²	EMBANKMENT VOLUME m³	AREA m²	VOLUME m³
7+500		9.8				7.0			
	20		109				94		
7+520		1.2				2.4			
	20		32				34		
7+540		2.0				1.0			
	20		40				11		
7+560		1.9				0.1			
	20		46				1		
7+580		2.6				0.0			
	20		104				0		
7+600		8.3				0.0			
	20		139				0		
7+620		5.6				0.0			
	20		116				0		
7+640		6.0				0.0			
	20		148				0		
7+660		8.8				0.0			
	20		145				0		
7+680		5.7				0.0			
	20		110				0		
7+700		5.3				0.0			
	20		129				24		
7+720		7.6				2.4			
	20		154				38		
7+740		7.8				1.4			
	20		165				17		
7+760		8.7				0.3			
	20		118				30		
7+780		3.1				2.7			
	20		85				67		
7+800		0.6				4.0			
	20		11				93		
7+820		0.5				5.3			
	20		10				68		
7+840		0.5				1.5			
	20		13				20		
7+860		0.8				0.5			
	20		20				35		
7+880		1.2				3.0			
	20		100				118		
7+900		8.8				8.8			
	20		88				125		
7+920		0.0				3.7			
	20		6				46		
7+940		0.6				0.9			
	20		46				9		
7+960		4.0				0.0			
	20		97				0		
7+980		5.7				0.0			
	20		85				6		
8+000		8.0				0.6			
								C=	2116
								F=	836
								R=	0
								FR=	0.495
								FF=	1.15
TOTALS			2116		0		836	EXC=	1155

STATION km + m	DIST m	TOTAL EXCAVATION EARTH AND ROCK AREA m²	TOTAL EXCAVATION EARTH AND ROCK VOLUME m³	ROCK EXCAVATION AREA m²	ROCK EXCAVATION VOLUME m³	EMBANKMENT AREA m²	EMBANKMENT VOLUME m³	AREA m²	VOLUME m³
8+000		8.0				0.6			
	20		128				37		
8+020		4.8				3.1			
	20		56				44		
8+040		0.8				1.3			
	20		15				48		
8+060		0.7				3.5			
	20		15				105		
8+080		0.7				7.0			
	20		14				99		
8+100		0.6				2.9			
	20		15				37		
8+120		0.9				0.8			
	20		19				11		
8+140		1.0				0.3			
	20		19				12		
8+160		0.9				0.9			
	20		14				22		
8+180		0.5				1.3			
	20		53				16		
8+200		4.7				0.3			
	20		52				3		
8+220		0.5				0.0			
	20		10				0		
8+240		0.5				0.0			
			0				0		
STA POT 8+254.726 =									
REV PC STA 8+254.730									
EQ = -0.004									
	19.996		14						
8+260		0.9				0.0			
	20		30				0		
8+280		2.1				0.0			
	20		85				0		
8+300		6.4				0.0			
	20		192				0		
8+320		12.8				0.0			
	20		254				0		
8+340		12.6				0.0			
	20		188				21		
8+360		6.3				2.1			
	20		292				91		
8+380		22.9				7.2			
							162		
REV PT STA 8+398.003 =									
STA 8+398.400									
EQ = -0.397									
	19.603		230						
8+400		0.5				9.0			
	20		10				256		
8+420		0.5				16.6			
	20		9				369		
8+440		0.4				20.3		C=	1776
	20		8				376	F=	1924
8+460		0.4				17.3		R=	0
	20		4				194	FR=	0.495
8+480		0.0				2.1		FF=	1.15
	20		50				21	EXF=	437
8+500		5.0				0.0			
TOTALS			1776		0		1924		

SUMMARY AND BALANCES

STATION TO STATION km + m	km + m	TOTAL EXC. EARTH+ROCK m³	ROCK EXCAVATION m³	EMBANKMENT m³	EXCESSES CUT	EXCESSES FILL	ACCUMULATIVE EXCESSES CUT	ACCUMULATIVE EXCESSES FILL

REMARKS

EARTH AND ROCK EXCAVATION	
SOLID ROCK EXCAVATION	
EARTH EXCAVATION	
PLANIMETERED FILL	
LESS FACTORED SOLID ROCK	
LESS DISPLACEMENT OF ANY LARGE STRUCTURES	
NET PLANIMETERED FILL	
FACTOR	
PLANIMETERED FILL INCLUDING FACTOR	
MATERIALS AVAILABLE FOR FILLS	
EARTH EXCAVATION	
CHANNEL EXCAVATION	
UNDERDRAIN EXCAVATION	
STRUCTURE EXCAVATION	
TOTAL MATERIAL AVAILABLE FOR FILL	
TOTAL FILL INCLUDING FACTOR	
TOTAL MATERIAL FOR FILL	
BORROW	
EXCESS EXCAVATION	

PROJECT NAME: HIGHGATE - FRANKLIN
PROJECT NUMBER: STP RS 0301(1) SA

FILE NAME: ...85c060/design/dc060frm.dgn
PROJECT LEADER: DELLASANTA
DESIGNED BY: SQUAD B
IPARM FILE NAME: dc060ew5.1

PLOT DATE: 09-MAY-2005
DRAWN BY: SQUAD B
CHECKED BY: SQUAD B
SHEET 24 OF 450

STATE OF VERMONT
AGENCY OF TRANSPORTATION

EARTHWORKS

Metric

STATION km + m	DIST m	TOTAL EXCAVATION EARTH AND ROCK AREA m²	TOTAL EXCAVATION EARTH AND ROCK VOLUME m³	ROCK EXCAVATION AREA m²	ROCK EXCAVATION VOLUME m³	EMBANKMENT AREA m²	EMBANKMENT VOLUME m³	AREA m²	VOLUME m³
8+500		5.0				0.0			
	20		177				0		
8+520		12.7				0.0			
	20		255				0		
8+540		12.8				0.0			
	20		218				0		
8+560		9.0				0.0			
	20		166				0		
8+580		7.6				0.0			
	20		126				36		
8+600		5.0				3.6			
	20		50				163		
8+620		0.0				12.7			
	20		0				265		
8+640		0.0				13.8			
	20		0				230		
8+660		0.0				9.2			
	20		6				189		
8+680		0.6				9.7			
	20		66				241		
8+700		6.0				14.4			
	20		63				394		
8+720		0.3				25.0			
	20		3				353		
8+740		0.0				10.3			
	20		10				160		
8+760		1.0				5.7			
	20		31				87		
8+780		2.1				3.0			
	20		97				32		
8+800		7.6				0.2			
	20		116				13		
8+820		4.1				1.1			
	20		46				14		
8+840		0.6				0.3			
	20		16				16		
8+860		1.1				1.3			
	20		35				29		
8+880		2.3				1.6			
	20		50				64		
8+900		2.7				4.8			
	20		77				146		
8+920		5.0				9.8			
	20		83				213		
8+940		3.3				11.5			
	20		64				302		
8+960		3.1				18.7			
	20		56				513		
8+980		2.5				32.6			
	20		52				830		
9+000		2.7				50.4			
								C=	1863
								F=	4290
								R=	0
								FR=	0.495
								FF=	1.15
TOTALS			1863		0		4290	EXF=	3071

STATION km + m	DIST m	TOTAL EXCAVATION EARTH AND ROCK AREA m²	TOTAL EXCAVATION EARTH AND ROCK VOLUME m³	ROCK EXCAVATION AREA m²	ROCK EXCAVATION VOLUME m³	EMBANKMENT AREA m²	EMBANKMENT VOLUME m³	AREA m²	VOLUME m³
9+000		2.7				50.4			
	20		56				1153		
9+020		2.9				64.9			
	20		56				1348		
9+040		2.8				69.9			
	20		54				1378		
9+060		2.6				67.9			
	20		54				1196		
9+080		2.7				51.7			
	20		53				858		
9+100		2.6				34.1			
	20		64				628		
9+120		3.9				28.7			
	20		62				477		
9+140		2.4				19.0			
	20		47				292		
9+160		2.4				10.2			
	20		57				170		
9+180		3.4				6.8			
	20		94				68		
9+200		6.0				0.0			
	20		145				0		
9+220		8.5				0.0			
	20		214				0		
9+240		12.9				0.0			
	20		220				1		
9+260		9.1				0.1			
	20		156				1		
9+280		6.5				0.0			
	20						0		
9+300		5.7	0			0.0			
							0		
POE STA 9+306.288 =									
POB STA AH14+650.000									
EQ = -5343.712									
		16.288					105		
14+660		7.3				0.0			
	20		162				9		
14+680		9.0				0.9			
	20		220				11		
14+700		13.0				0.2			
	20		236				2		
14+720		10.6				0.0			
	20		213				0		
14+740		10.7				0.0			
	20		199				58		
14+760		9.2				5.8			
	20		199				58		
14+780		10.7				0.0			
	20		234				0		
14+800		12.7				0.0			
	20		241				2		
14+820		11.4				0.2		C=	3345
	20		204				58	F=	7768
14+840		9.0				5.6		R=	0
								FR=	0.495
								FF=	1.15
TOTALS			3345		0		7768	EXF=	5588

STATION km + m	DIST m	TOTAL EXCAVATION EARTH AND ROCK AREA m²	TOTAL EXCAVATION EARTH AND ROCK VOLUME m³	ROCK EXCAVATION AREA m²	ROCK EXCAVATION VOLUME m³	EMBANKMENT AREA m²	EMBANKMENT VOLUME m³	AREA m²	VOLUME m³
14+840		9.0				5.6			
	20		144				89		
14+860		5.4				3.3			
	20		122				36		
14+880		6.8				0.3			
	20		185				3		
14+900		11.7				0.0			
	20		191				27		
14+920		7.4				2.7			
	20		139				65		
14+940		6.5				3.8			
	20		122				131		
14+960		5.7				9.3			
	20		135				125		
14+980		7.8				3.2			
	20		171				45		
15+000		9.4				1.3			
	20		195				14		
15+020		10.2				0.1			
	14		160				1	C=	1564
15+034		12.7				0.1		F=	536
								R=	0
								FR=	0.495
								FF=	1.15
TOTALS			1564		0		536	EXC=	948

SUMMARY AND BALANCES

STATION TO STATION km + m	km + m	TOTAL EXC. EARTH+ROCK m³	ROCK EXCAVATION m³	EMBANKMENT m³	EXCESSES CUT	EXCESSES FILL	ACCUMULATIVE EXCESSES CUT	ACCUMULATIVE EXCESSES FILL

REMARKS

EARTH AND ROCK EXCAVATION
SOLID ROCK EXCAVATION
EARTH EXCAVATION

PLANIMETERED FILL
LESS FACTORED SOLID ROCK
LESS DISPLACEMENT OF ANY LARGE STRUCTURES
NET PLANIMETERED FILL
FACTOR
PLANIMETERED FILL INCLUDING FACTOR

MATERIALS AVAILABLE FOR FILLS
EARTH EXCAVATION
CHANNEL EXCAVATION
UNDERDRAIN EXCAVATION
STRUCTURE EXCAVATION

TOTAL MATERIAL AVAILABLE FOR FILL

TOTAL FILL INCLUDING FACTOR
TOTAL MATERIAL FOR FILL
BORROW
EXCESS EXCAVATION

PROJECT NAME: HIGHGATE - FRANKLIN
PROJECT NUMBER: STP RS 0301(1) SA

FILE NAME: ...85c060/design/dc060frm.dgn
PROJECT LEADER: DELLASANTA
DESIGNED BY: SQUAD B
IPARM FILE NAME: dc060ew6.i

PLOT DATE: 09-MAY-2005
DRAWN BY: SQUAD B
CHECKED BY: SQUAD B
SHEET 25 OF 450

STATE OF VERMONT
AGENCY OF TRANSPORTATION

EARTHWORKS

VAOT Metric

STATION km + m	DIST m	TOTAL EXCAVATION EARTH AND ROCK AREA m²	TOTAL EXCAVATION EARTH AND ROCK VOLUME m³	ROCK EXCAVATION AREA m²	ROCK EXCAVATION VOLUME m³	EMBANKMENT AREA m²	EMBANKMENT VOLUME m³	AREA m²	VOLUME m³
TOWN HIGHWAYS									
TH #32			0						
20+000		0				0.0			
	20		28				55		
20+020		2.8				5.5			
	10		18				27		
20+030		0.8				0.0			
	10		4				0		
20+040		0				0.0			
			0						
TH #24			0						
21+000		0.0				0.0			
	10		60				23		
21+010		11.9				4.6			
	10		111				39		
21+020		10.3				3.2			
	10		102				32		
21+030		10.1				3.1			
	10		87				31		
21+040		7.2				3.0			
	10		65				31		
21+050		5.8				3.2			
	10		31				16		
21+060		0.4				0.0			
	10		2				0		
21+070		0.0				0.0			
			0						
TH #15			0						
22+000		0.0				0.0			
	10		53				27		
22+010		10.6				5.5			
	10		86				38		
22+020		6.6				2.2			
	10		77				29		
22+030		8.8				3.6			
	10		93				36		
22+040		9.8				3.6			
	10		102				36		
22+050		10.5				3.6			
	10		107				36		
22+060		10.9				3.6			
	20		109				36		
22+080		0.0				0.0			
			0						
								C=	1139
								F=	492
								R=	0
								FR=	0.495
								FF=	1.15
TOTALS			1139		0		492	EXC=	573

STATION km + m	DIST m	TOTAL EXCAVATION EARTH AND ROCK AREA m²	TOTAL EXCAVATION EARTH AND ROCK VOLUME m³	ROCK EXCAVATION AREA m²	ROCK EXCAVATION VOLUME m³	EMBANKMENT AREA m²	EMBANKMENT VOLUME m³	AREA m²	VOLUME m³
TH #25			0						
23+000		0.0				0.0			
	10		9				30		
23+010		1.8				5.9			
	10		16				46		
23+020		1.5				3.3			
	10		17				27		
23+030		1.9				2.1			
	10		20				20		
23+040		2.0				1.9			
	10		25				24		
23+050		3.0				3.0			
	10		15				15		
23+060		0.0				0.0			
			0						
TH #37			0						
24+000		0.0				0.0			
	10		61				53		
24+010		12.2				10.6			
	10		127				72		
24+020		13.3				3.9			
	10		97				34		
24+030		6.1				3.0			
	10		51				29		
24+040		4.0				2.8			
	6		12				8		
24+046		0.0				0.0			
			0						
TH #21			0						
25+000		0.0				0.0			
	10		65				23		
25+010		13.0				4.5			
	10		93				32		
25+020		5.5				1.8			
	10		44				16		
25+030		3.3				1.5			
	10		16				7		
25+040		0.0				0.0			
			0						
								C=	668
								F=	436
								R=	0
								FR=	0.495
								FF=	1.15
TOTALS			668		0		436	EXC=	167

STATION km + m	DIST m	TOTAL EXCAVATION EARTH AND ROCK AREA m²	TOTAL EXCAVATION EARTH AND ROCK VOLUME m³	ROCK EXCAVATION AREA m²	ROCK EXCAVATION VOLUME m³	EMBANKMENT AREA m²	EMBANKMENT VOLUME m³	AREA m²	VOLUME m³
DRIVES									
1+080 RT		10.2	82			3.0	36		
1+085 LT		2.7	22			3.1	21		
1+115 RT		1.5	18			3.8	27		
1+136 LT		0.6	3			12.2	149		
1+161 RT		1.0	20			6.8	79		
1+194 LT		0.7	5			6.3	104		
1+220 RT		2.1	104			14.0	134		
1+344 LT		0.5	4			1.5	18		
1+413 RT		0.5	4			2.0	20		
1+428 RT		0.6	2			1.4	11		
1+484 LT		0.6	4			2.1	24		
1+499 RT		1.2	6			1.8	11		
1+564 LT		0.5	4			2.6	31		
1+724 RT		1.9	13			1.0	8		
1+834 RT		0.6	4			2.5	19		
1+834 LT		1.2	8			10.6	91		
1+921 LT		10.0	50			2.7	34		
1+973 RT		3.2	22			2.1	20		
1+973 LT		13.8	87			1.9	30		
2+340 RT		2.4	17			2.1	17		
2+378 LT		4.1	13			1.9	22		
2+506 RT		0.6	2			9.1	197		
2+562 RT		10.3	43			1.8	23		
2+590 LT		2.3	8			1.9	28		
2+983 LT		4.2	21			2.0	16		
								C=	566
								F=	1170
								R=	0
								FR=	0.495
								FF=	1.15
TOTALS			566		0		1170	EXF=	780

SUMMARY AND BALANCES

STATION TO STATION km + m	km + m	TOTAL EXC. EARTH+ROCK m³	ROCK EXCAVATION m³	EMBANKMENT m³	EXCESSES CUT	EXCESSES FILL	ACCUMULATIVE EXCESSES CUT	ACCUMULATIVE EXCESSES FILL

REMARKS

EARTH AND ROCK EXCAVATION	
SOLID ROCK EXCAVATION	
EARTH EXCAVATION	
PLANIMETERED FILL	
LESS FACTORED SOLID ROCK	
LESS DISPLACEMENT OF ANY LARGE STRUCTURES	
NET PLANIMETERED FILL	
FACTOR	
PLANIMETERED FILL INCLUDING FACTOR	
MATERIALS AVAILABLE FOR FILLS	
EARTH EXCAVATION	
CHANNEL EXCAVATION	
UNDERDRAIN EXCAVATION	
STRUCTURE EXCAVATION	
TOTAL MATERIAL AVAILABLE FOR FILL	
TOTAL FILL INCLUDING FACTOR	
TOTAL MATERIAL FOR FILL	
BORROW	
EXCESS EXCAVATION	

PROJECT NAME: HIGHGATE - FRANKLIN
PROJECT NUMBER: STP RS 0301(1) SA

FILE NAME: ...85c060/design/dc060frm.dgn
PROJECT LEADER: DELLASANTA
DESIGNED BY: SQUAD B
IPARM FILE NAME: dc060ew7.1

PLOT DATE: 09-MAY-2005
DRAWN BY: SQUAD B
CHECKED BY: SQUAD B
SHEET 26 OF 450

STATE OF VERMONT
AGENCY OF TRANSPORTATION

EARTHWORKS

VAOT Metric

STATION km + m	DIST m	TOTAL EXCAVATION EARTH AND ROCK AREA m²	TOTAL EXCAVATION EARTH AND ROCK VOLUME m³	ROCK EXCAVATION AREA m²	ROCK EXCAVATION VOLUME m³	EMBANKMENT AREA m²	EMBANKMENT VOLUME m³	AREA m²	VOLUME m³
3+037 RT		1.5	9			6.9	57		
3+068 LT		0.9	4			3.7	48		
3+244 RT		0.6	3			3.4	28		
3+400 LT		0.8	6			5.7	58		
3+540 RT		4.4	13			1.9	21		
3+549 LT		7.2	29			3.3	64		
3+560 RT		9.5	67			3.7	66		
3+772 LT		1.2	4			2.4	34		
3+845 RT		0.3	1			4.0	49		
4+086 RT		0.7	3			1.8	16		
4+125 RT		0.4	2			1.7	20		
4+255 LT		1.9	7			1.5	10		
4+275 LT		3.4	13			1.2	8		
4+297 RT		0.7	6			2.4	24		
4+347 RT		5.2	21			2.3	19		
4+390 LT		4.2	17			6.3	59		
4+417 RT		5.3	29			3.2	30		
4+637 LT		0.6	2			1.5	31		
4+639 RT		1.0	4			1.8	21		
4+847 LT		0.4	2			14.3	208		
4+847 RT		0.9	4			2.7	24		
4+872 LT		0.2	1			14.9	195		
4+935 LT		2.5	9			1.5	20		
5+264 RT		0.5	2			1.5	17		
5+575 RT		0.6	2			7.9	73		
5+628 LT		1.1	6			2.1	11		
5+735 LT		4.5	50			3.8	40	C=	325
								F=	1260
5+764 LT		2.4	9			1.4	9	R=	0
								FR=	0.495
								FF=	1.15
TOTALS			325		0		1260	EXF=	1124

STATION km + m	DIST m	TOTAL EXCAVATION EARTH AND ROCK AREA m²	TOTAL EXCAVATION EARTH AND ROCK VOLUME m³	ROCK EXCAVATION AREA m²	ROCK EXCAVATION VOLUME m³	EMBANKMENT AREA m²	EMBANKMENT VOLUME m³	AREA m²	VOLUME m³
6+024 LT		3.3	17			1.6	17		
6+150 RT		0.6	2			1.5	14		
6+386 LT		0.9	4			2.1	23		
6+386 RT		1.0	4			3.8	59		
6+507 RT		0.7	3			13.4	272		
6+511 LT		0.4	2			4.9	53		
6+541 LT		0.7	3			6.0	53		
23+016 RT		2.7	11			1.3	13		
23+040 RT		3.7	26			2.3	27		
6+658 LT		0.4	2			3.0	27		
6+774 LT		5.5	28	5.571	25.1	2.4	57		
6+790 RT		0.6	3			1.7	6		
6+810 RT		0.6	4			5.0	33		
6+830 RT		0.7	3			6.2	72		
6+840 LT		6.3	25			3.5	59		
7+030 LT		4.9	20			2.4	27		
7+053 LT		6.5	26			1.5	33		
7+405 LT		7.6	30			1.5	24		
7+501 RT		0.7	3			1.8	24		
7+618 LT		8.8	49			1.6	22		
7+653 LT		5.9	59			3.3	33		
7+749 RT		2.5	10			15.7	535		
7+827 LT		1.7	9			6.6	48		
8+060 LT		8.5	28			4.4	136		
8+118 LT		3.9	15			4.2	100		
8+309 LT		11.1	78			3.3	85		
								C=	464
								F=	1852
								R=	25
								FR=	0.495
								FF=	1.15
TOTALS			464		25		1852	EXF=	1653

STATION km + m	DIST m	TOTAL EXCAVATION EARTH AND ROCK AREA m²	TOTAL EXCAVATION EARTH AND ROCK VOLUME m³	ROCK EXCAVATION AREA m²	ROCK EXCAVATION VOLUME m³	EMBANKMENT AREA m²	EMBANKMENT VOLUME m³	AREA m²	VOLUME m³
REV 8+352.570	LT	2.0	7			4.6	35		
8+412	LT	0.6	2			4.4	70		
8+585	RT	1.6	7			1.7	19		
8+587	LT	6.6	36			1.6	19		
8+626	RT	0.6	2			9.4	171		
8+764	RT	1.1	4			4.6	52		
8+860	LT	0.6	3			2.8	37		
9+262	LT	3.7	27			3.8	33		
AH 14+670	LT	0.6	2			6.0	66		
AH 14+806	LT	1.1	7			4.4	95		
AH 14+850	RT	5.0	20			1.2	21		
AH 14+895	LT	2.7	10			1.9	16		
AH 14+895	RT	15.3	51			1.5	36		
AH 14+925	LT	1.5	8			2.1	26		
AH 14+927	RT	5.1	38			2.3	33		
AH 15+014	RT	10.8	30			0.9	14		
AH 15+028	LT	1.9	12			2.2	15		
								C=	266
								F=	758
								R=	0
								FR=	0.495
								FF=	1.15
TOTALS			266		0		758	EXF=	606

SUMMARY AND BALANCES

STATION TO STATION km + m	km + m	TOTAL EXC. EARTH+ROCK m³	ROCK EXCAVATION m³	EMBANKMENT m³	EXCESSES CUT	EXCESSES FILL	ACCUMULATIVE EXCESSES CUT	ACCUMULATIVE EXCESSES FILL

REMARKS

EARTH AND ROCK EXCAVATION
SOLID ROCK EXCAVATION
EARTH EXCAVATION

PLANIMETERED FILL
LESS FACTORED SOLID ROCK
LESS DISPLACEMENT OF ANY LARGE STRUCTURES
NET PLANIMETERED FILL
FACTOR
PLANIMETERED FILL INCLUDING FACTOR

MATERIALS AVAILABLE FOR FILLS
EARTH EXCAVATION
CHANNEL EXCAVATION
UNDERDRAIN EXCAVATION
STRUCTURE EXCAVATION

TOTAL MATERIAL AVAILABLE FOR FILL

TOTAL FILL INCLUDING FACTOR
TOTAL MATERIAL FOR FILL
BORROW
EXCESS EXCAVATION

PROJECT NAME: HIGHGATE - FRANKLIN
PROJECT NUMBER: STP RS 0301(1) SA

FILE NAME: ...85c060/design/dc060frm.dgn
PROJECT LEADER: DELLASANTA
DESIGNED BY: SQUAD B
IPARM FILE NAME: dc060ew8.i
PLOT DATE: 09-MAY-2005
DRAWN BY: SQUAD B
CHECKED BY: SQUAD B
SHEET 27 OF 450

STATE OF VERMONT
AGENCY OF TRANSPORTATION
RIGHT OF WAY PLANS
ALPHABETICAL INDEX

TOWN OF FRANKLIN

GRANTOR	DETAIL SHEET NO.	LAYOUT SHEET NO.	PARCEL NO.	
Boudreau, Harvey L. & Sally M.	47	72	60	
Burley, Vibeke B. & John S.	45	68-69	31	
Columb, Cedric D. & Annette M.	41	59	16	
Corey, Kenneth D. & Patti A.	43	64-65	24	
Corey, Reginald D.	43	64	23	
Corey, Roger R. & Paula M.	43	64	22	
Dandurand, Marc & Ann	45	70	35	
Dube, John B.	45	69	32	
Deuso, Howard L. & Pamela J.	44	66-67	28	
Durkee, Paul M.	45	70	34	
Fiske, Wayne A. & Nancy K. Joined by Vermont Land Trust, Inc. et al	40 40 40	57-59 58-61 61	14B 14C 14D	
Forsyth, Thomas IV & Brenda G.	44	66-68	27	
Gagne, Roger G. & Louise M.	41-42 42 42	61-63 62-64 68-72	20A 20B 20C	Current Use Program
Jensen, Richard J. Jr. & Marianne M.	41	61	18	
Laroche, Real J. & Marie Claire Laroche, Matthew S.	47	61-64	62A 62B	
Magnant, Thomas A. & Nancy S.	46 46-47 47	70-72 72-73 72-73	58A 58B 58C	Current Use Program
Magnant, Timothy A. & Martha E.	47	73	38A	Current Use Program
McCurley, Calvin R. Jr. & Janice A.	43 43	63-64 64-66	21A 21B	
Messier, Michael L. & Bonnie L.	47	72	61	
Patterson, Thomas R. & Jeri L.	43 44	65 65-66	26A 26B	
Rainville, Adrian C. & Marie Y.	41 41	59-61 61	17A 17B	Current Use Program
Raynack, George J. Jr. & Rebecca A.	45	69-70	33	
Shepard, Valerie J. & Taylor, John	40	57-58	15	
Tremblay, Gerard J. Sr. & Paula	45	68	30	
Vieta, Carl D.	41 41	61-62 61	19A 19B	
Vorse, Lillian	44	65	25	
Welker, Gary A. & Debra J.	47	72	59	
Wright, Geraldine S.	44	67-68	29	

TOWN OF HIGHGATE

GRANTOR	DETAIL SHEET NO.	LAYOUT SHEET NO.	PARCEL NO.	
Adams, Jane L.	36	49	3	
Bessette, Donald P. & Frances M.; Bessette, Brian H.	39 39	55-57 56-57	12A 12B	Current Use Program
Bessette, Donald P. & Frances M.; Bessette, Scott R.; Bessette, Marc D. Joined by Vermont Land Trust, Inc. et al	37 37 37 38 38	52 52-53 52-55 54-55 55-56	6A 6B 6C 6D 6E	
Coutts, Daryl M. & Lise A.	38	52	7	
Duhamel, James T. & Holly L.	36	48	2	
Dupuis, Jacques A. & Suzanne G.	39 39	52 53-54	9A 9B	
Dupuis, Jacques, Suzanne, Luc & Jeannine	39	53	10	
Dupuis, Luc & Jeannine	39	55	11	
Fiske, Wayne A. & Nancy K.	40	57	14A	
Johnston, Ronald A. & Shelly A.	36	50-51	4	
Laughlin, Michael D. & Florence H.	38	52	8	
Locke, Kathy A.	36	51-52	5	
Raiche, Louis L. III & Mary A.	40	57	13	
Wyman, Winifred Duhamel; Duhamel, James T.; Duhamel, John A. Joined by Vermont Land Trust, Inc. et al	35 35 35-36	48-49 48-50 49-52	1A 1B 1C	
Bessette, Scott R. & Elizabeth M.	47	55	63	

IP_PWP:dms0301l\rc060alpha.dgn
DATE PLOTTED: 09-MAY-2005

ALPHABETICAL SHEET

HIGHGATE- FRANKLIN
STP RS 0301(1)SA

R.O.W. SHEET 34 OF 73 SHEETS SHEET 28 OF 450

STATE OF VERMONT
AGENCY OF TRANSPORTATION

RIGHT - OF - WAY DETAIL SHEET

Metric

TABLE OF PROPERTY ACQUISITION

PARCEL NO.	PROPERTY OWNER	SHEET NO.	BEGINNING STATION	ENDING STATION	TAKE	REMAINDER	RIGHT			RECORDING DATA					REMARKS
					AREA ±	AREA ±	TYPE	(T)/(P)	AREA ±	TITLE	DATE	TOWN / CITY	BOOK	PAGE	
1A	WYMAN, WINIFRED DUHAMEL;	48,49	1+039.47 RT.	1+162.48 RT.	490 S.M.							HIGHGATE			0.12A±
	DUHAMEL, JAMES T.;		1+039.2 RT.	1+049.6 RT.			INSTALL	(T)	20 S.M.						EROSION CONTROL 215 SF±
	DUHAMEL, JOHN A.		1+043.7 RT.	1+075.1 RT.			SLOPE	(T)	42 S.M.						452 SF±
	JOINED BY VERMONT LAND TRUST,		1+080.0 RT.				DRIVE	(T)							8.0M(26') GRAVEL
	INC., VERMONT DEPARTMENT OF		1+083.2 RT.	1+109.1 RT.			SLOPE	(T)	17 S.M.						183 SF±
	AGRICULTURE, FOOD AND MARKETS;		1+115.0 RT.				DRIVE	(T)							12.0M(39') GRAVEL
	AND VERMONT HOUSING AND		1+121.1 RT.	1+148.8 RT.			SLOPE	(T)	126 S.M.						1356 SF±
	CONSERVATION BOARD		1+147.5 RT.	1+171.2 RT.			CULVERT	(T)							
			1+160.0 RT.				DRIVE	(T)							20.0M(66') PAVED
			1+168.7 RT.	1+196.0 RT.			SLOPE	(T)	78 S.M.						840 SF±
			1+193.9 RT.	1+260.0 RT.			CULVERT	(T)							
			1+220.0 RT.				DRIVE	(T)							49.5M(162') GRAVEL
			1+244.0 RT.	1+370.5 RT.			SLOPE	(T)	215 S.M.						2260 SF±
			1+244.0 RT.	1+400.0 RT.			CONST.	(T)	338 S.M.						3434 SF±
			1+414.0 RT.				DRIVE	(T)							7.0M(23') GRAVEL
			1+412.8 RT.	1+420.3 RT.			CULVERT	(T)							
			1+423.9 RT.	1+433.7 RT.			CULVERT	(T)							
			1+428.0 RT.				DRIVE	(T)							3.6M(12') GRAVEL
			1+430.2 RT.	1+467.0 RT.			SLOPE	(T)	14 S.M.						151 SF±
1B		48-50	1+179.9 LT.	1+190.5 LT.			SLOPE	(T)	29 S.M.						312 SF±
			1+180.4 LT.	1+190.5 LT.			CONST.	(T)	23 S.M.						248 SF±
			1+194.0 LT.				DRIVE	(T)							7.0M (23') GRAVEL
			1+197.7 LT.	1+340.6 LT.			CONST.	(T)	310 S.M.						3337 SF±
			1+245.2 LT.	1+300.0 LT.			SLOPE	(T)	43 S.M.						463 SF±
			1+339.0 LT.	1+349.3 LT.			CULVERT	(T)							
			1+344.0 LT.				DRIVE	(T)							7.0M(23') GRAVEL
			1+347.6 LT.	1+480.2 LT.			CONST.	(T)	299 S.M.						3219 SF±
			1+372.5 LT.	1+459.4 LT.			SLOPE	(T)	33 S.M.						355 SF±
			1+484.0 LT.				DRIVE	(T)							7.0M(23') GRAVEL
			1+487.2 LT.	1+560.4 LT.			CONST.	(T)	99 S.M.						1066 SF±
			1+537.0 LT.	1+560.4 LT.			SLOPE	(T)	7 S.M.						72 SF±
			1+558.4 LT.	1+569.6 LT.			CULVERT	(T)							
			1+564.0 LT.				DRIVE	(T)							7.0M(23') GRAVEL
			1+567.4 LT.	1+830.5 LT.			CONST.	(T)	672 S.M.						INCL. EROSION CONTROL &
															TEMP. SNOW FENCE 7234 SF±
			1+567.5 LT.	1+588.2 LT.			SLOPE	(T)	70 S.M.						753 SF±
			1+588.2 LT.	1+591.8 LT.			INSTALL & MAINTAIN	(P)	34 S.M.						SEDIMENT TRAP, 366 SF±
			1+591.8 LT.	1+608.4 LT.			SLOPE	(T)	93 S.M.						1001 SF±
			1+608.4 LT.	1+653.2 LT.			SLOPE	(P)	67 S.M.						INCL. TEMP. EROSION CONTROL 721 SF±
			1+622.6 LT.	1+626.8 LT.			CUL., DIT., & DR.	(P)							
			1+640.0 LT.				CUL., DR.	(P)							
			1+687.2 LT.	1+720.0 LT.			SLOPE	(T)	46 S.M.						495 SF±
			1+720.0 LT.	1+798.1 LT.			SLOPE	(P)	239 S.M.						INCL. TEMP. EROSION CONTROL 2573 SF±
			1+740.0 LT.				DRAINAGE	(P)							
			1+764.1 LT.	1+765.3 LT.			CUL., DIT., & DR.	(P)							
			1+807.2 LT.	1+830.4 LT.			SLOPE	(T)	17 S.M.						183 SF±
			1+834.0 LT.				DRIVE	(T)							7.0M(23') GRAVEL
			1+837.6 LT.	1+918.9 LT.			CONST.	(T)	189 S.M.						INCL. EROSION CONTROL 2034 SF±
			1+837.6 LT.	1+860.0 LT.			SLOPE	(T)	55 S.M.						INCL. EROSION CONTROL 592 SF±
			1+853.3 LT.	1+854.3 LT.			CUL., DIT., & DR.	(P)							
			1+850.5 LT.	1+884.6 LT.			SLOPE	(P)	32 S.M.						344 SF±; INCL. TEMP. EROSION CONTROL
			1+860.0 LT.				DRAINAGE	(P)							
			1+880.0 LT.	1+918.9 LT.			SLOPE	(T)	68 S.M.						732 SF±
			1+914.7 LT.	1+925.1 LT.			CULVERT	(T)							
			1+920.0 LT.				DRIVE	(T)							5.0M(16') GRAVEL
			1+922.9 LT.	1+927.6 LT.			SLOPE	(T)	12 S.M.						129 SF±
1C		49-52	1+619.4 RT.	1+720.3 RT.			CONST.	(T)	161 S.M.						INCL. EROSION CONTROL 1733 SF±
			1+624.9 RT.	1+720.0 RT.			SLOPE	(T)	95 S.M.						1023 SF±
			1+724.0 RT.				DRIVE	(T)							7.0M(23') GRAVEL
			1+727.3 RT.	1+830.0 RT.			CONST.	(T)	240 S.M.						INCL. EROSION CONTROL 2583 SF±
			1+745.9 RT.	1+780.7 RT.			SLOPE	(T)	37 S.M.						INCL. EROSION CONTROL 398 SF±
			1+761.6 RT.	1+763.1 RT.			CULVERT	(P)							INCLUDES DRAIN INLET
			1+832.9 RT.	1+841.3 RT.			CULVERT	(T)							
			1+834.0 RT.				DRIVE	(T)							7.0M(23') GRAVEL
			1+837.5 RT.	1+870.9 RT.			SLOPE	(T)	54 S.M.						INCL. EROSION CONTROL 581 SF±
			1+837.5 RT.	1+970.4 RT.			CONST.	(T)	243 S.M.						INCL. EROSION CONTROL 2616 SF±
			1+840.0 RT.				CUL., DR.	(P)							
			1+851.4 RT.				CULVERT	(P)							
			1+973.0 RT.				DRIVE	(T)							7.0M(23') GRAVEL
			1+977.4 RT.	2+336.5 RT.			CONST.	(T)	988 S.M.						INCL. EROSION CONTROL &
															TEMP. SNOW FENCE, 10,635 SF ±
	CONTINUED ON NEXT SHEET														

TABLE OF REVISIONS

REVISION NO.	SHEET NO.	DESCRIPTION	DATE
1	44, 67	PARCEL NO. 27 FORSYTH. ADD REMOVE(T) FOR PIPE. PER C.O. 9323. MADE BY: G.J.F APPROVED BY: R.P.D.	11/5/03
2	44,67	PARCEL NO. 29 WRIGHT. REVISED SLOPE RIGHTS. LABELED "SAVE" FOR TREES. ADDED RIGHT TO REMOVE PIPE & ELIMINATED EXCEPT & RESERVE. PER C.O. 9324. MADE BY: G.J.F. APPROVED BY: R.P.D.	11/5/03
3	37,52-55	PARCEL NO. 6C BESSETTE. ADJUST UTILITY EASEMENT. ALIGNMENT PULLED IN. PER C.O. 9357. MADE BY: G.J.F. APPROVED BY: R.P.D.	06/15/2004
4	39,55	PARCEL NO. 11 DUPUIS. UTILITY RELOCATION ADJUSTMENT. ADJACENT PROPERTY OWNER REQUESTS TO MOVE UTILITY CLOSER TO RIGHT-OF-WAY. PER C.O. 9358. MADE BY: G.J.F. APPROVED BY: R.P.D.	06/15/2004
5	39,55-57	PARCEL NO. 12A BESSETTE. PROPERTY OWNER REQUEST TO MOVE RELOCATED UTILITY CLOSER TO RIGHT-OF-WAY. PER C.O. 9359. MADE BY: G.J.F. APPROVED BY: R.P.D.	
6	40,57	PARCEL NO. 15 SHEPARD. ADJUST UTILITY EASEMENT. ALIGNMENT PULLED IN. AREA REDUCED. PER C.O. 9360 MADE BY: G.J.F. APPROVED BY: R.P.D.	06/15/2004
7	40,59	PARCEL NO. 14B FISKE. REVISE PROPERTY LINE WITH PARCEL 16. CHANGE ANY AFFECTED SLOPE AND CONSTRUCTION RIGHTS AS NECESSARY. PARCEL 14D ADD SIDEWALK (T) AT STA. 5+529 RT. PARCEL 14E ADD NEW RIGHTS FOR DRIVE AND REMOVAL OF FENCE. PER C.O. 9362 MADE BY: G.J.F. APPROVED BY: R.P.D.	
8	40,57	PARCEL NO. 15 SHEPARD. REVISE DRIVE, SLOPE AND ANY OTHER RIGHTS, AS NECESSARY. PER C.O. 9363. MADE BY: G.J.F. APPROVED BY: R.P.D.	
9	41,59	PARCEL NO. 16 COLUMB. REVISE PROPERTY LINE WITH PARCEL 14C. ADD DRIVE RIGHT AT STA. 4+872.3 LT. REVISE DRIVE, SLOPE AND CONSTRUCTION LINES AS NECESSARY. REMOVE & RESET TREE AT STA. 4+928 LT. PER C.O. 9364. MADE BY: G.J.F. APPROVED BY: R.P.D.	
10	41,59-61	PARCEL NO. 17A RAINVILLE. REVISE SLOPE, DRIVE, CONSTRUCTION AND ANY OTHER RIGHTS NECESSARY. PER C.O. 9365. MADE BY: G.J.F. APPROVED BY: R.P.D.	
11	41,42,47 61-63, 68-72	PARCEL NO. 20A GAGNE & PARCEL NO. 62A LAROCHE. NO CHANGE IN RIGHTS. NAME CHANGE ONLY. PARCEL 20B. ADD NEW PROPERTY LINE AT STA. 6+026LT.± (CL OF DRIVE) REVISE RIGHTS TO PARCEL 20B AND ADD NEW PARCEL 62B. REVISE PARCEL 20C. REVISE DRIVE, SLOPE, CONSTRUCTION AND ANY OTHER RIGHTS AS NECESSARY. PER C.O. 9366. MADE BY: G.J.F. APPROVED BY: R.P.D.	
12	42,64-66	PARCEL NO. 21A McCURLEY. REVISE SLOPE, CONSTRUCTION AND ANY OTHER AFFECTED RIGHTS. PARCEL 21B. REVISE SLOPE, CONSTRUCTION AND ANY OTHER AFFECTED RIGHTS, AS NECESSARY. PER C.O. 9367. MADE BY: G.J.F. APPROVED BY: R.P.D.	
13	43,64	PARCEL NO. 23 COREY. REVISE SLOPE, CONSTRUCTION AND ANY OTHER AFFECTED RIGHTS, AS NECESSARY. PER C.O. 9368. MADE BY: G.J.F. APPROVED BY: R.P.D.	
14	43,64,65	PARCEL NO. 24 COREY. ADD DRIVE AT STA. 6+840 LT. ADJUST SLOPE AND CONSTRUCTION RIGHTS AS NECESSARY PER C.O. 9369. MADE BY: G.J.F. APPROVED BY: R.P.D.	

PLAN LEGEND

- EXISTING RIGHT-OF-WAY
- TAKING WITH ACCESS
- TAKING WITHOUT ACCESS
- CLEAR ZONE (CZ)
- PROPERTY LINE (P / L)
- TOE OF SLOPE
- TOP OF CUT
- SLOPE RIGHT (SR (P))
- CONSTRUCTION RIGHT (CONST. (T))

(P) -PERMANENT
(T) -TEMPORARY
DR. -DRAINAGE RIGHT
DIT. -DITCHING RIGHT
CH. -CHANNEL RIGHT
DRIVE -DRIVE RIGHT
CUL. -CULVERT RIGHT
C&T -CLEARING & TRIMMING RIGHT
SR -SLOPE RIGHT
UE -UTILITY EASEMENT

APPROVED: ROGER P. DUMAS DATE: 10-15-03
CHIEF, PLANS & TITLES

DATE PLOTTED: 04/11/2005
REVISED ROW: 07/16/2004

PROJECT NAME: **HIGHGATE-FRANKLIN**
PROJECT NUMBER: **STP RS 0301(1) SA**

FILE NAME: **rc060d.xls**
PROJECT LEADER: **DELLASANTA**
DESIGNED BY: **SQUAD B**
R.O.W. SHEET 35 OF 73

PLOT DATE:
DRAWN BY: **GJF**
CHECKED BY: **EGP**
SHEET **29** OF **450**

STATE OF VERMONT
AGENCY OF TRANSPORTATION

RIGHT - OF - WAY DETAIL SHEET

Metric

TABLE OF PROPERTY ACQUISITION

PARCEL NO.	PROPERTY OWNER	SHEET NO.	BEGINNING STATION	ENDING STATION	TAKE	REMAINDER	RIGHT			RECORDING DATA					REMARKS
					AREA ±	AREA ±	TYPE	(T)/(P)	AREA ±	TITLE	DATE	TOWN / CITY	BOOK	PAGE	
1C	CONTINUED FROM PREVIOUS SHEET														
			2+000.5 RT.	2+056.1 RT.			SLOPE	(T)	42 S.M.						452 SF±
			2+083.6 RT.	2+138.2 RT.			SLOPE	(T)	62 S.M.						667 SF±
			2+138.2 RT.	2+141.8 RT.			INSTALL & MAINTAIN	(P)	19 S.M.						SEDIMENT TRAP 205 SF±
			2+141.8 RT.	2+157.7 RT.			SLOPE	(T)	41 S.M.						441 SF±
			2+164.9 RT.	2+195.7 RT.			SLOPE	(T)	43 S.M.						463 SF±
			2+190.2 RT.	2+228.1 RT.			SLOPE	(P)	33 S.M.						355 SF±
			2+180.0 RT.				CUL., DR.	(P)							
			2+209.0 RT.	2+218.6 RT.			CUL., DIT.	(P)							
			2+218.4 RT.	2+336.1 RT.			SLOPE	(T)	172 S.M.						1852 SF±
			2+238.2 RT.	2+241.8 RT.			INSTALL & MAINTAIN	(P)	44 S.M.						SEDIMENT TRAP 474 SF±
			2+241.8 RT.	2+277.3 RT.			SLOPE	(T)	136 S.M.						1464 SF±
			2+340.0 RT.				DRIVE	(T)							7.0M(23') GRAVEL
			2+343.5 RT.	2+432.6 RT.			CONST.	(T)	280 S.M.						INCL. EROSION CONTROL 3014 SF±
			2+343.9 RT.	2+432.6 RT.			SLOPE	(T)	91 S.M.						980 SF±
			2+420.0 RT.				CUL., DR.	(P)							
2	DUHAMEL, JAMES T. &	48	1+121.0 LT.	1+133.7 LT.			SLOPE	(T)	8 S.M.			HIGHGATE			86 SF±
	HOLLY L.		1+136.0 LT.				DRIVE	(T)							5.4M(18') PAVED
			1+139.1 LT	1+180.4 LT.			SLOPE	(T)	186 S.M.						2002 SF±
3	ADAMS, JANE L.	49	1+493.9 RT.	1+503.3 RT.			CULVERT	(T)				HIGHGATE			
			1+498.0 RT.				DRIVE	(T)							4.6M(15') GRAVEL
			1+500.8 RT.	1+619.3 RT.			CONST.	(T)	413 S.M.						INCL. EROSION CONTROL & SNOW FENCE, 4446 SF±
			1+521.6 RT.	1+538.2 RT.			SLOPE	(T)	54 S.M.						581 SF±
			1+538.2 RT.	1+541.8 RT.			INSTALL & MAINTAIN	(P)	23 S.M.						SEDIMENT TRAP 248 SF±
			1+541.8 RT.	1+559.0 RT.			SLOPE	(T)	56 S.M.						603 SF±
			1+564.7 RT.	1+619.0 RT.			SLOPE	(P)	76 S.M.						INCL. TEMP. EROSION CONTROL 818 SF±
			1+603.4 RT.	1+608.1 RT.			CUL., DIT.	(P)							
4	JOHNSTON, RONALD A. &	50,51	1+928.0 LT.	1+969.4 LT.			SLOPE	(T)	85 S.M.			HIGHGATE			915 SF±
	SHELLY A.		1+928.0 LT.				REMOVE	(T)							CEDAR TREE
			1+928.6 LT.	1+932.4 LT.			REMOVE & RESET	(T)							FENCE
			1+929.0 LT.	1+944.4 LT.			REMOVE	(T)							FLOWER BED & SAND CHERRIES
			1+952.5 LT.				REMOVE	(T)							LILACS
			1+973.0 LT.				DRIVE	(T)							6.3M(21') GRAVEL
			1+976.0 LT.	1+994.3 LT.			SLOPE	(T)	10 S.M.						108 SF±
			2+005.5 LT.	2+041.6 LT.			SLOPE	(T)	13 S.M.						140 SF±
			2+020.0 LT.	2+218.7 LT.			CONST.	(T)	558 S.M.						INCL. EROSION CONTROL & TEMP. SNOW FENCE 6006 SF±
			2+059.0 LT.	2+222.4 LT.			UTILITY EASE.	(P)	909 S.M.						9785 SF±
			2+077.6 LT.	2+178.9 LT.			SLOPE	(T)	286 S.M.						3079 SF±
			2+169.9 LT.	2+222.4 LT.			SLOPE	(P)	180 S.M.						INCL. TEMP. EROSION CONTROL 1938 SF±
			2+216.2 LT.	2+222.4 LT.			CUL., DIT. & DR.	(P)							INCL. STONE FILL & TEMP. EROSION CONTROL
5	LOCKE, KATHY A.	51,52	2+215.6 LT.	2+375.9 LT.			CONST.	(T)	295 S.M.			HIGHGATE			INCL. EROSION CONTROL & SNOW FENCE 3175 SF±
			2+215.6 LT.	2+222.4 LT.			REMOVE & RESET	(T)							FENCE
			2+218.8 LT.	2+225.9 LT.			CUL., DIT. & DR.	(P)	21 S.M.						INCL. STONE FILL 226 SF±
			2+220.3 LT.	2+581.4 LT.			UTILITY EASE.	(P)	0.11 HA						0.27A±
			2+220.8 LT.	2+250.0 LT.			SLOPE	(P)	58 S.M.						INCL. TEMP. EROSION CONTROL 624 SF±
			2+242.7 LT.	2+270.7 LT.			SLOPE	(T)	30 S.M.						323 SF±
			2+240.0 LT.	2+243.7 LT.			CUL., DR.	(P)							
			2+378.0 LT.				DRIVE	(T)							3.1M(10') GRAVEL
			2+379.7 LT.	2+581.4 LT.			CONST.	(T)	796 S.M.						INCL. EROSION CONTROL 8568 SF±
			2+397.1 LT.	2+403.4 LT.			SLOPE	(T)	1 S.M.						11 SF±
			2+430.1 LT.	2+479.0 LT.			SLOPE	(T)	136 S.M.						INCL. EROSION CONTROL 1464 SF±
			2+474.8 LT.	2+528.9 LT.			SLOPE	(P)	203 S.M.						INCL. TEMP. EROSION CONTROL 2185 SF±
			2+483.0 LT.				CUL., DR.	(P)							
			2+520.0 LT.	2+560.0 LT.			SLOPE	(T)	127 S.M.						1367 SF±
			2+538.2 LT.	2+541.8 LT.			CUL., DR.	(P)	12 S.M.						INCL. SEDIMENT TRAP, 129 SF±
			2+546.1 LT.				REMOVE	(T)							PINE TREE

TABLE OF REVISIONS

REVISION NO.	SHEET NO.	DESCRIPTION	DATE
15	44,66-68	PARCEL NO. 27 FORSYTH. REVISE SLOPE, CONSTRUCTION, DRIVE AND ANY OTHER AFFECTED RIGHTS AS REQUIRED. PER C.O. 9370. MADE BY: G.J.F. APPROVED BY: R.P.D.	
16	44,66,67	PARCEL NO. 28 DUESO. REVISE SLOPE RIGHTS. PER C.O. 9371. MADE BY: G.J.F. APPROVED BY: R.P.D.	
17	44,67-68	PARCEL NO. 29 WRIGHT. REVISE SLOPE, DRIVE AND ANY OTHER RIGHTS AFFECTED BY DESIGN CHANGES. PER C.O. 9372. MADE BY: G.J.F. APPROVED BY: R.P.D.	
18	44,68,69	PARCEL NO. 30 TREMBLAY. CREATE TWO SUB PARCELS, 30A & 30B AND ADJUST ALL DRIVE, SLOPE, CONSTRUCTION AND ANY OTHER RIGHTS NECESSARY. PER C.O. 9373. MADE BY: G.J.F. APPROVED BY: R.P.D.	
19	44,68	PARCEL NO. 31 BURLEY. REVISE PROPERTY LINE WITH PARCEL 30A & PARCEL 30B. ADJUST DRIVE, SLOPE, CONSTRUCTION AND ANY OTHER RIGHTS AS NECESSARY. PER C.O. 9374. MADE BY: G.J.F. APPROVED BY: R.P.D.	
20	45,69	PARCEL NO. 32 DUBE. REVISE SLOPE AND CONSTRUCTION RIGHTS AS NECESSARY. PER C.O. 9375. MADE BY: G.J.F. APPROVED BY: R.P.D.	
21	45,69,70	PARCEL NO. 33 RAGUACK. REVISE SLOPE, CONSTRUCTION AND ANY OTHER RIGHTS AS NECESSARY. PER C.O. 9376. MADE BY: G.J.F. APPROVED BY: R.P.D.	
22	45, 70	PARCEL NO. 34 DURKEE. REVISE SLOPE AND DRIVE RIGHTS AS NECESSARY. PER C.O. 9377. MADE BY: G.J.F. APPROVED BY: R.P.D.	
23	45,70	PARCEL NO. 35 DANDURAND. REVISE DRIVE, SLOPE AND CONSTRUCTION RIGHTS AS NECESSARY. PER C.O. 9378. MADE BY: G.J.F. APPROVED BY: R.P.D.	
24	47,72	PARCEL NO. 60 BOUDREAU. REVISE DRIVE, SLOPE AND EROSION CONTROL RIGHTS AS NECESSARY. SAVE TREE AT STA. 9+304.1 LT. REMOVE THREE TREES AT STA. 9+304.1 LT. ~ 9+286.8 LT. PER C.O. 9379. MADE BY: G.J.F. APPROVED BY: R.P.D.	
25	34,39,47 55	PARCEL NO. 12A & PARCEL NO. 63. ADD NEW PARCEL 63 SCOTT R. & ELIZABETH M. BESSETTE. DONALD BESSETTE CONVEYED A BUILDING LOT TO NEW OWNERS. REVISE RIGHTS ACCORDINGLY ON LAYOUT AND DETAIL SHEET. LIST PARCEL 63 ON ALPHA INDEX SHEET. PER C.O. 9410 MADE BY: P.J.H. APPROVED BY: R.P.D.	03/09/2005

PLAN LEGEND

- EXISTING RIGHT-OF-WAY
- TAKING WITH ACCESS
- TAKING WITHOUT ACCESS
- CLEAR ZONE (CZ)
- PROPERTY LINE (P/L)
- TOE OF SLOPE
- TOP OF CUT
- SLOPE RIGHT (SR (P))
- CONSTRUCTION RIGHT (CONST. (T))

(P) -PERMANENT
(T) -TEMPORARY
DR. -DRAINAGE RIGHT
DIT. -DITCHING RIGHT
CH. -CHANNEL RIGHT
DRIVE -DRIVE RIGHT
CUL. -CULVERT RIGHT
C&T -CLEARING & TRIMMING RIGHT
SR -SLOPE RIGHT
UE -UTILITY EASEMENT

APPROVED: ROGER P. DUMAS DATE: 10-15-03
CHIEF, PLANS & TITLES

DATE PLOTTED: 04/11/2005

PROJECT NAME: HIGHGATE-FRANKLIN
PROJECT NUMBER: STP RS 0301(1) SA

FILE NAME: rc060d.xls
PROJECT LEADER: DELLASANTA
DESIGNED BY: SQUAD B
R.O.W. SHEET 36 OF 73
PLOT DATE: 10/15/03
DRAWN BY: GJF
CHECKED BY: EGP
SHEET 30 OF 450

STATE OF VERMONT
AGENCY OF TRANSPORTATION

RIGHT - OF - WAY DETAIL SHEET

Metric

TABLE OF PROPERTY ACQUISITION

PARCEL NO.	PROPERTY OWNER	SHEET NO.	BEGINNING STATION	ENDING STATION	TAKE	REMAINDER	RIGHT			RECORDING DATA					REMARKS
					AREA ±	AREA ±	TYPE	(T)/(P)	AREA ±	TITLE	DATE	TOWN / CITY	BOOK	PAGE	
6A	BESSETTE, DONALD P. &	52	2+432.6 RT.	2+440.0 RT.			SLOPE	(T)	15 S.M.			HIGHGATE			161 SF±
	FRANCES M.;		2+432.6 RT.	2+452.5 RT.			CONST.	(T)	63 S.M.						INCL. EROSION CONTROL &
	BESSETTE, SCOTT R.;														TEMP. SNOW FENCE 678 SF±
	BESSETTE, MARC D.		2+436.7 RT.	2+452.2 RT.			SLOPE	(P)	46 S.M.						495 SF±
	JOINED BY VERMONT LAND TRUST,														
	INC.; VERMONT DEPARTMENT OF														
	AGRICULTURE, FOOD AND MARKETS;														
	AND VERMONT HOUSING AND														
	CONSERVATION BOARD														
6B		52-53	2+640.1 RT.	2+980.8 RT.			CONST.	(T)	0.11HA						0.27A±, INCL. EROSION CONTROL &
															TEMP. SNOW FENCE
			2+640.5 RT.	2+658.2 RT.			SLOPE	(T)	109 S.M.						INCL. EROSION CONTROL 1173 SF±
			2+640.6 RT.	2+644.0 RT.			SLOPE	(P)	3 S.M.						INCL. TEMP. EROSION CONTROL 32 SF±
			2+655.6 RT.				REMOVE	(T)							TREE
			2+658.2 RT.	2+661.8 RT.			INSTALL & MAINTAIN	(P)	38 S.M.						SEDIMENT TRAP 409 SF±
			2+661.8 RT.	2+837.1 RT.			SLOPE	(T)	374 S.M.						4026 SF±
			2+737.5 RT.				INSTALL	(T)							FIELD DRAIN
			2+830.0 RT.	2+891.5 RT.			SLOPE	(P)	83 S.M.						INCL. TEMP. EROSION CONTROL 893 SF±
			2+844.9 RT.	2+846.9 RT.			CUL., DIT.	(P)							
			2+860.0 RT.				DRAINAGE	(P)							
			2+971.8 RT.	2+980.8 RT.			SLOPE	(T)	2 S.M.						22 SF±
6C		52-55	2+642.1 LT.	2+980.2 LT.			CONST.	(T)	0.10HA						0.25A±, INCL. EROSION CONTROL &
															TEMP. SNOW FENCE
			2+642.9 LT.	3+512.8 LT.			UTILITY EASE.	(P)	0.30HA						0.74A±
			2+643.2 LT.	2+658.2 LT.			SLOPE	(T)	83 S.M.						INCL. EROSION CONTROL 893 SF±
			2+658.2 LT.	2+661.8 LT.			INSTALL & MAINTAIN	(P)	30 S.M.						SEDIMENT TRAP; 323 SF±
			2+661.8 LT.	2+696.1 LT.			SLOPE	(T)	99 S.M.						1066 SF±
			2+680.0 LT.				CUL., DR.	(P)							
			2+748.7 LT.	2+797.6 LT.			SLOPE	(T)	41 S.M.						441 SF±
			2+802.1 LT.	2+834.7 LT.			SLOPE	(T)	40 S.M.						431 SF±
			2+830.0 LT.	2+870.0 LT.			SLOPE	(P)	75 S.M.						INCL. TEMP. EROSION CONTROL 807 SF±
			2+847.5 LT.	2+849.4 LT.			CUL., DIT. & DR.	(P)							
			2+860.0 LT.				DRAINAGE	(P)							
			2+865.4 LT.	2+932.7 LT.			SLOPE	(T)	45 S.M.						484 SF±
			2+983.0 LT.				DRIVE	(T)							5.0M(16') GRAVEL
			2+985.2 LT.	3+065.7 LT.			CONST.	(T)	194 S.M.						INCL. EROSION CONTROL 2088 SF±
			3+052.2 LT.	3+065.6 LT.			SLOPE	(T)	7 S.M.						75 SF±
			3+062.1 LT.	3+073.7 LT.			CULVERT	(T)							
			3+068.0 LT.				DRIVE	(T)							4.7M(15') GRAVEL
			3+070.3 LT.	3+396.5 LT.			CONST.	(T)	0.11HA						0.27A±, INCL. EROSION CONTROL &
															TEMP. SNOW FENCE
			3+082.3 LT.	3+098.2 LT.			SLOPE	(T)	48 S.M.						517 SF±
			3+098.2 LT.	3+101.7 LT.			INSTALL & MAINTAIN	(P)	21 S.M.						SEDIMENT TRAP; 226 SF±
			3+098.8 LT.	3+184.0 LT.			REMOVE & RESET	(T)							FENCE
			3+101.7 LT.	3+120.0 LT.			SLOPE	(T)	67 S.M.						721 SF±
			3+113.6 LT.	3+166.2 LT.			SLOPE	(P)	153 S.M.						INCL. TEMP. EROSION CONTROL 1647 SF±
			3+145.7 LT.	3+153.6 LT.			CUL., DIT. & DR.	(P)							
			3+149.2 LT.				REMOVE	(T)							460MM CCMP
			3+160.0 LT.	3+178.2 LT.			SLOPE	(T)	128 S.M.						1378 SF±
			3+178.2 LT.	3+181.8 LT.			INSTALL & MAINTAIN	(P)	42 S.M.						SEDIMENT TRAP 452 SF±
			3+180.0 LT.				CUL., DR.	(P)							
			3+181.8 LT.	3+213.7 LT.			SLOPE	(T)	120 S.M.						1292 SF±
			3+262.3 LT.	3+389.1 LT.			SLOPE	(T)	363 S.M.						INCL. EROSION CONTROL 3907 SF±
			3+340.0 LT.				CUL., DIT. & DR.	(P)							
			3+400.0 LT.				DRIVE	(T)							7.0M (23') GRAVEL
			3+403.5 LT.	3+512.8 LT.			CONST.	(T)	306 S.M.						INCLUDES EROSION CONTROL &
															SNOW FENCE 3294 SF±
			3+441.7 LT.	3+458.2 LT.			SLOPE	(T)	52 S.M.						560 SF±
			3+458.2 LT.	3+461.8 LT.			INSTALL & MAINTAIN	(P)	23 S.M.						SEDIMENT TRAP; 248 SF±
			3+461.8 LT.	3+512.8 LT.			SLOPE	(T)	204 S.M.						INCL. EROSION CONTROL 2196 SF±
			3+465.2 LT.	3+505.6 LT.			REMOVE & RESET	(T)							FENCE
			3+480.0 LT.				CUL., DR.	(P)							
			3+487.6 LT.	3+490.6 LT.			CUL., DIT. & DR.	(P)							
	CONTINUED ON NEXT SHEET														

TABLE OF REVISIONS

REVISION NO.	SHEET NO.	DESCRIPTION	DATE

PLAN LEGEND

EXISTING RIGHT-OF-WAY
TAKING WITH ACCESS
TAKING WITHOUT ACCESS
CLEAR ZONE (CZ)
PROPERTY LINE (P / L)
TOE OF SLOPE
TOP OF CUT
SLOPE RIGHT (SR (P))
CONSTRUCTION RIGHT (CONST. (T))

(P) -PERMANENT
(T) -TEMPORARY
DR. -DRAINAGE RIGHT
DIT. -DITCHING RIGHT
CH. -CHANNEL RIGHT
DRIVE -DRIVE RIGHT
CUL. -CULVERT RIGHT
C&T -CLEARING & TRIMMING RIGHT
SR -SLOPE RIGHT
UE -UTILITY EASEMENT

DATE PLOTTED: 04/11/2005

APPROVED: ROGER P. DUMAS DATE: 10-15-03
CHIEF, PLANS & TITLES

PROJECT NAME: HIGHGATE-FRANKLIN
PROJECT NUMBER: STP RS 0301(1) SA

FILE NAME: rc060d.xls
PROJECT LEADER: DELLASANTA
DESIGNED BY: SQUAD B
R.O.W. SHEET 37 OF 73
PLOT DATE: 06/14/04
DRAWN BY: GJF
CHECKED BY: EGP
SHEET 31 OF 450

STATE OF VERMONT
AGENCY OF TRANSPORTATION

RIGHT - OF - WAY DETAIL SHEET

Metric

TABLE OF PROPERTY ACQUISITION

PARCEL NO.	PROPERTY OWNER	SHEET NO.	BEGINNING STATION	ENDING STATION	TAKE	REMAINDER	RIGHT			RECORDING DATA					REMARKS
					AREA ±	AREA ±	TYPE	(T)/(P)	AREA ±	TITLE	DATE	TOWN / CITY	BOOK	PAGE	
	CONTINUED FROM PREVIOUS SHEET														
6D		54-55	3+144.6 RT.	3+241.2 RT.			CONST.	(T)	332 S.M.			HIGHGATE			INCL. EROSION CONTROL &
															TEMP. SNOW FENCE 3574 SF±
			3+147.1 RT.	3+166.3 RT.			SLOPE	(P)	54 S.M.						INCL. TEMP. EROSION CONTROL 581 SF±
			3+147.6 RT.	3+151.3 RT.			CUL. & DIT.	(P)							
			3+153.5 RT.				REMOVE	(T)							TREE
			3+160.0 RT.	3+178.2 RT.			SLOPE	(T)	66 S.M.						710 SF±
			3+164.1 RT.				REMOVE	(T)							TREE
			3+178.2 RT.	3+181.8 RT.			INSTALL & MAINTAIN	(P)	21 S.M.						SEDIMENT TRAP; 226 SF±
			3+181.8 RT.	3+198.5 RT.			SLOPE	(T)	48 S.M.						517 SF±
			3+225.5 RT.	3+241.1 RT.			SLOPE	(T)	8 S.M.						86 SF±
			3+244.0 RT.				DRIVE	(T)							4.7M(15') GRAVEL
			3+245.9 RT.	3+538.0 RT.			CONST.	(T)	936 S.M.						INCL. EROSION CONTROL &
															SNOW FENCE 10,075 SF±
			3+246.1 RT.	3+381.7 RT.			SLOPE	(T)	241 S.M.						INCL. EROSION CONTROL 2,594 SF±
			3+340.0 RT.				CUL. & DIT.	(P)							
			3+442.3 RT.	3+458.2 RT.			SLOPE	(T)	50 S.M.						538 SF±
			3+458.2 RT.	3+461.8 RT.			INSTALL & MAINTAIN	(P)	23 S.M.						SEDIMENT TRAP 248 SF±
			3+461.7 RT.	3+477.3 RT.			SLOPE	(T)	50 S.M.						538 SF±
			3+467.0 RT.				INSTALL & MAINTAIN	(P)							GUY WIRE & ANCHOR
			3+480.3 RT.	3+538.0 RT.			SLOPE	(T)	128 S.M.						INCL. EROSION CONTROL 1378 SF±
			3+482.0 RT.	3+484.8 RT.			CUL. & DIT.	(P)							
			3+488.4 RT.				REMOVE	(T)							600 MM CCMP
			3+540.0 RT.				DRIVE	(T)							3.0M(10') GRAVEL
			3+541.2 RT.	3+542.7 RT.			CONST.	(T)	3 S.M.						32 SF±
6E		55-56	3+812.0 LT.	3+830.21 LT.	126 S.M.										1,356 SF±
			3+574.2 LT.	3+770.2 LT.			CONST.	(T)	714 S.M.						INCL. EROSION CONTROL &
															TEMP. SNOW FENCE 7686 SF±
			2+574.2 LT.	3+597.0 LT.			SLOPE	(T)	42 S.M.						452 SF±
			3+580.0 LT.				CUL. & DR.	(P)							
			3+590.0 LT.	3+670.0 LT.			SLOPE	(P)	185 S.M.						INCL. TEMP. EROSION CONTROL 1991 SF±
			3+622.5 LT.	3+630.6 LT.			CUL., DIT. & DR.	(P)							
			3+631.9 LT.				REMOVE & RESET	(T)							FENCE 8M BACK
			3+660.0 LT.				DRAINAGE	(P)							
			3+660.0 LT.	3+813.1 LT.			INSTALL & MAINTAIN	(P)							UNDERDRAIN
			3+664.5 LT.	3+770.1 LT.			SLOPE	(T)	187 S.M.						2013 SF±
			3+705.5 LT.				INSTALL	(T)							FIELD DRAIN
			3+765.8 LT.	3+776.6 LT.			CULVERT	(T)							
			3+772.0 LT.				DRIVE	(T)							3.1M(10') GRAVEL
			3+773.5 LT.	3+817.9 LT.			CONST.	(T)	131 S.M.						INCL. EROSION CONTROL 1410 SF±
			3+773.6 LT.	3+814.8 LT.			SLOPE	(T)	61 S.M.						657 SF±
			3+819.6 LT.	3+825.0 LT.			UTILITY EASE.	(P)	21 S.M.						226 SF±
7	COUTTS, DARYL M.&	52	2+451.9 RT.	2+491.2 RT.			SLOPE	(P)	189 S.M.			HIGHGATE			INCL. TEMP. EROSION CONTROL 2034 SF±
	LISE A.		2+452.2 RT.	2+508.3 RT.			CONST.	(T)	229 S.M.						INCL. EROSION CONTROL &
															TEMP. SNOW FENCE 2465 SF±
			2+479.0 RT.	2+487.0 RT.			CUL.	(P)							INCL. STONE FILL
			2+483.0 RT.				REMOVE	(T)							CULVERT
			2+483.3 RT.	2+505.1 RT.			SLOPE	(T)	80 S.M.						INCL. EROSION CONTROL 861 SF±
			2+496.3 RT.	2+512.0 RT.			CULVERT	(T)							
			2+506.0 RT.				DRIVE	(T)							3.0M(10') GRAVEL
			2+508.4 RT.	2+532.0 RT.			SLOPE	(T)	49 S.M.						527 SF±
8	LAUGHLIN, MICHAEL D. &	52	2+531.9 RT.	2+559.8 RT.			SLOPE	(T)	91 S.M.			HIGHGATE			980 SF±
	FLORENCE H.		2+532.6 RT.	2+556.2 RT.			REMOVE & RESET	(T)							FLOWER BED & CEDARS
			2+562.0 RT.				DRIVE	(T)							4.2M(14') GRAVEL
			2+564.0 RT.	2+588.0 RT.			SLOPE	(T)	20 S.M.						215 SF±
			2+567.7 RT.	2+593.3 RT.			REMOVE & RESET	(T)							PLANTING BED
			2+600.0 RT.	2+640.6 RT.			CONST.	(T)	131 S.M.						INCL. EROSION CONTROL &
															SNOW FENCE 1410 SF±
			2+606.2 RT.	2+640.8 RT.			SLOPE	(P)	73 S.M.						INCL. TEMP. EROSION CONTROL 786 SF±
			2+636.0 RT.				CUL., DIT.	(P)							

TABLE OF REVISIONS

REVISION NO.	SHEET NO.	DESCRIPTION	DATE

PLAN LEGEND

- EXISTING RIGHT-OF-WAY
- TAKING WITH ACCESS
- TAKING WITHOUT ACCESS
- CLEAR ZONE (CZ)
- PROPERTY LINE (P / L)
- TOE OF SLOPE
- TOP OF CUT
- SLOPE RIGHT (SR (P))
- CONSTRUCTION RIGHT (CONST. (T))

(P) -PERMANENT
(T) -TEMPORARY
DR. -DRAINAGE RIGHT
DIT. -DITCHING RIGHT
CH. -CHANNEL RIGHT
DRIVE -DRIVE RIGHT
CUL. -CULVERT RIGHT
C&T -CLEARING & TRIMMING RIGHT
SR -SLOPE RIGHT
UE -UTILITY EASEMENT

APPROVED: ROGER P. DUMAS DATE: 10-15-03
CHIEF, PLANS & TITLES

DATE PLOTTED: 04/11/2005

PROJECT NAME: HIGHGATE-FRANKLIN
PROJECT NUMBER: STP RS 0301(1) SA

FILE NAME: rc060d.xls
PROJECT LEADER: DELLASANTA
DESIGNED BY: SQUAD B
R.O.W. SHEET 38 OF 73

PLOT DATE: 06/14/04
DRAWN BY: GJF
CHECKED BY: EGP
SHEET 32 OF 450

STATE OF VERMONT
AGENCY OF TRANSPORTATION

RIGHT - OF - WAY DETAIL SHEET

Metric

TABLE OF PROPERTY ACQUISITION

PARCEL NO.	PROPERTY OWNER	SHEET NO.	BEGINNING STATION	ENDING STATION	TAKE	REMAINDER	RIGHT			RECORDING DATA					REMARKS
					AREA ±	AREA ±	TYPE	(T)/(P)	AREA ±	TITLE	DATE	TOWN / CITY	BOOK	PAGE	
9A	DUPUIS, JACQUES A. &	52	2+578.2 LT.	2+644.2 LT.			UTILITY EASE.	(P)	219 S.M.			HIGHGATE			2357 SF±
	SUZANNE G.		2+578.3 LT.	2+588.2 LT.			CONST.	(T)	27 S.M.						291 SF±
			2+590.0 LT.				DRIVE	(T)							3.6M(12') GRAVEL
			2+591.8 LT.	2+643.2 LT.			CONST.	(T)	166 S.M.						INCL. EROSION CONTROL &
															SNOW FENCE 1787 SF±
			2+591.9 LT.	2+644.2 LT.			SLOPE	(T)	168 S.M.						INCL. EROSION CONTROL 1808 SF±
			2+632.2 LT.	2+643.6 LT.			SLOPE	(P)	9 S.M.						INCL. TEMP. EROSION CONTROL 97 SF±
			2+636.0 LT.				CUL., DIT. & DR.	(P)							
9B		53-54	3+053.0 RT.	3+140.0 RT.			SLOPE	(T)	16 S.M.						172 SF±
			3+110.1 RT.	3+139.9 RT.			REMOVE & RESET	(T)							FENCE
			3+129.7 RT.	3+140.0 RT.			CUL., DR.	(P)							
			3+130.3 RT.	3+138.7 RT.			INSTALL	(T)	37 S.M.						EROSION CONTROL &
															SNOW FENCE 398 SF±
			3+132.4 RT.	3+148.8 RT.			SLOPE	(P)	41 S.M.						INCL. TEMP. EROSION CONTROL 441 SF±
			3+137.7 RT.	3+146.9 RT.			CONST.	(T)	47 S.M.						INCL. EROSION CONTROL &
															SNOW FENCE, 506 SF±
			3+140.3 RT.				REMOVE	(T)							TREE
			3+143.6 RT.	3+148.5 RT.			CUL., DIT.	(P)							
			3+147.0 RT.				REMOVE	(T)							460MM CCMP
10	DUPUIS, JACQUES A. &	53	2+980.8 RT.	3+036.6 RT.			SLOPE	(T)	98 S.M.			HIGHGATE			1055 SF±
	SUZANNE G.;		2+981.3 RT.	3+008.4 RT.			REMOVE & RESET	(T)							FENCE
	DUPUIS, LUC & JEANNINE		3+037.0 RT.				DRIVE	(T)							6.0M(20') GRAVEL
			3+043.1 RT.	3+053.5 RT.			SLOPE	(T)	16 S.M.						172 SF±
11	DUPUIS, LUC & JEANNINE	55	3+512.8 LT.	3+524.5 LT.			SLOPE	(T)	7 S.M.			HIGHGATE			75 SF±
			3+512.8 LT.	3+529.5 LT.			UTILITY EASE.	(P)	23 S.M.						248 SF±
			3+512.9 LT.				REMOVE & RESET	(T)							I.P.-TO 3+512.81, 7.60 LT.
			3+520.0 LT.	3+549.4 LT.			INSTALL	(T)	52 S.M.						SNOW FENCE, 560 SF±
			3+549.0 LT.				DRIVE	(T)							4.0M(13') GRAVEL
			3+553.7 LT.	3+574.2 LT.			INSTALL	(T)	43 S.M.						SNOW FENCE, 463 SF±
			3+559.6 LT.	3+574.2 LT.			INSTALL	(T)	25 S.M.						EROSION CONTROL 269 SF±
			3+564.3 LT.	3+574.2 LT.			SLOPE	(T)	8 S.M.						86 SF±
			3+566.9 LT.	3+574.2 LT.			REMOVE & RESET	(T)							FENCE
12A	BESSETTE, DONALD P. &	55-57	3+542.5 RT.	3+548.2 RT.			CONST.	(T)	15 S.M.			HIGHGATE			161 SF± INCLUDES SNOW FENCE
	FRANCES M.;		3+542.7 RT.	3+546.6 RT.			SLOPE	(T)	5 S.M.						54 SF±
	BESSETTE, BRIAN H.														
			3+649.8 RT.	4+303.9 RT.			UTILITY EASE.	(P)	0.26HA.						2,560 S.M.; 0.63A±
			3+651.5 RT.	3+842.7 RT.			CONST.	(T)	612 S.M.						INCLUDES EROSION CONTROL; 6,588 SF±
			3+649.8 RT.	3+685.3 RT.			SLOPE	(P)	80 S.M.						INCL. TEMP. EROSION CONTROL 861 SF±
			3+680.0 RT.	4+220.0 RT.			INSTALL & MAINTAIN	(P)							UNDERDRAIN
			3+680.0 RT.	3+842.7 RT.			SLOPE	(T)	319 S.M.						3434 SF±
			3+680.0 RT.				DRAINAGE	(P)							
			3+838.4 RT.	3+850.9 RT.			CULVERT	(T)							
			3+845.0 RT.				DRIVE	(T)							4.0M(13') GRAVEL
			3+846.7 RT.	4+086.9 RT.			CONST.	(T)	768 S.M.						INCL. EROSION CONTROL 8267 SF±
			3+846.7 RT.	4+086.0 RT.			SLOPE	(T)	365 S.M.						3929 SF±
			4+083.8 RT.	4+093.7 RT.			CULVERT	(T)							
			4+086.0 RT.				DRIVE	(T)							4.5M(15') GRAVEL
			4+091.4 RT.	4+122.7 RT.			CONST.	(T)	103 S.M.						1109 SF±
			4+091.7 RT.	4+122.5 RT.			SLOPE	(T)	19 S.M..						205 SF±
			4+118.9 RT.	4+129.4 RT.			CULVERT	(T)							
			4+125.0 RT.				DRIVE	(T)							4.0M(13') GRAVEL
			4+126.7 RT.	4+240.0 RT.			CONST.	(T)	358 S.M.						3854 SF±
			4+127.1 RT.	4+236.2 RT.			SLOPE	(T)	154 S.M.						1658 SF±
			4+265.6 RT.	4+304.0 RT.			REMOVE & RESET	(T)							FENCE
			4+297.0 RT.				DRIVE	(T)							8.0M(26') GRAVEL
			4+310.4 RT.	4+393.8 RT.			UTILITY EASE.	(P)	236 S.M.						2540 SF±
			4+347.0 RT.				DRIVE	(T)							4.1M(13') GRAVEL
			4+351.1 RT.	4+393.9 RT.			CONST.	(T)	117 S.M.						1259 SF±
			4+371.9 RT.	4+392.6 RT.			SLOPE	(T)	12 S.M.						129 SF±
			4+380.0 RT.	4+382.0 RT.			INSTALL & MAINTAIN	(P)							STONE PAD
			4+392.0 RT.				REMOVE & RESET	(T)							FENCE 3M BACK
12B		56-57	3+839.5 LT.	4+249.4 LT.			CONST.	(T)	0.13HA.						0.32A±; INCL. EROSION CONTROL
			3+844.8 LT.	4+249.6 LT.			SLOPE	(T)	0.16HA.						0.39A±
			3+846.0 LT.	4+220.0 LT.			INSTALL & MAINTAIN	(P)							UNDERDRAIN
			3+854.0 LT.				REMOVE	(T)							EXISTING 380mm CMP
			4+235.0 LT.				INSTALL & MAINTAIN	(P)							GUY ANCHOR & WIRE
			4+240.0 LT.				CUL., DR.	(P)							

TABLE OF REVISIONS

REVISION NO.	SHEET NO.	DESCRIPTION	DATE

PLAN LEGEND

- EXISTING RIGHT-OF-WAY
- TAKING WITH ACCESS
- TAKING WITHOUT ACCESS
- CLEAR ZONE (CZ)
- PROPERTY LINE (P / L)
- TOE OF SLOPE
- TOP OF CUT
- SLOPE RIGHT (SR (P))
- CONSTRUCTION RIGHT (CONST. (T))

(P) -PERMANENT
(T) -TEMPORARY
DR. -DRAINAGE RIGHT
DIT. -DITCHING RIGHT
CH. -CHANNEL RIGHT
DRIVE -DRIVE RIGHT
CUL. -CULVERT RIGHT
C&T -CLEARING & TRIMMING RIGHT
SR -SLOPE RIGHT
UE -UTILITY EASEMENT

DATE PLOTTED: 04/11/2005

APPROVED: ROGER P. DUMAS DATE: 10-15-03
CHIEF, PLANS & TITLES

PROJECT NAME: **HIGHGATE-FRANKLIN**
PROJECT NUMBER: **STP RS 0301(1) SA**

FILE NAME: **rc060d.xls** PLOT DATE: **06/14/04**
PROJECT LEADER: **DELLASANTA** DRAWN BY: **GJF**
DESIGNED BY: **SQUAD B** CHECKED BY: **EGP**
R.O.W. SHEET 39 OF 73 SHEET **33** OF **450**

STATE OF VERMONT
AGENCY OF TRANSPORTATION

RIGHT - OF - WAY DETAIL SHEET

Metric

TABLE OF PROPERTY ACQUISITION

PARCEL NO.	PROPERTY OWNER	SHEET NO.	BEGINNING STATION	ENDING STATION	TAKE	REMAINDER	RIGHT			RECORDING DATA					REMARKS
					AREA ±	AREA ±	TYPE	(T)/(P)	AREA ±	TITLE	DATE	TOWN / CITY	BOOK	PAGE	
13	RAICHE, LOUIS L. III & MARY A.	57	4+255.0 LT.				DRIVE	(T)				HIGHGATE			3.8M(12') GRAVEL
			4+266.2 LT.				REMOVE	(T)							TREE
			4+275.0 LT.				DRIVE	(T)							3.7M(12') GRAVEL
			4+299.9 LT.	4+361.4 LT.			SLOPE	(T)	150 S.M.						1615 SF±
			4+354.0 LT.				CUL., DR.	(P)							
14A	FISKE, WAYNE A. &	57	4+360.4 LT.	4+388.2 LT.			CONST.	(T)	88 S.M.			HIGHGATE			947 SF±
	NANCY K.		4+361.0 LT.	4+388.1 LT.			SLOPE	(T)	56 S.M.						603 SF±
	JOINED BY VERMONT LAND TRUST,		4+384.8 LT.	4+395.7 LT.			CULVERT	(T)							
	INC.; VERMONT DEPARTMENT OF		4+390.0 LT.				DRIVE	(T)							4.0M(13') GRAVEL
	AGRICULTURE, FOOD AND MARKETS		4+392.1 LT.	4+404.6 LT.			SLOPE	(T)	32 S.M.						344 SF±
			4+392.1 LT.	4+406.7 LT.			CONST.	(T)	43 S.M.						463 SF±
14B		57-59	4+402.7 LT.	4+636.5 LT.			SLOPE	(T)	749 S.M.			FRANKLIN			INCL. EROSION CONTROL 8062 SF±
			4+404.6 LT.	4+638.1 LT.			CONST.	(T)	750 S.M.						INCL. EROSION CONTROL 8073 SF±
			4+430.1 LT.	4+457.8 LT.			UTILITY EASE.	(P)	103 S.M.						1109 SF±
			4+479.5 LT.	4+493.9 LT.			SLOPE	(P)	5 S.M.						INCL. TEMP. EROSION CONTROL 54 SF±
			4+492.0 LT.				CULVERT	(P)							
			4+637.0 LT.				DRIVE	(T)							3.7M(12') GRAVEL
			4+640.8 LT.	4+758.0 LT.			SLOPE	(T)	522 S.M.						5619 SF±
			4+640.9 LT.	4+844.9 LT.			CONST.	(T)	658 S.M.						7083 SF±
			4+763.7 LT.	4+844.9 LT.			SLOPE	(T)	322 S.M.						3466 SF±
			4+847.0 LT.				DRIVE	(T)							4.1M(13') GRAVEL
			4+849.0 LT.	4+860.8 LT.			SLOPE	(T)	26 S.M.						280 SF±
			4+849.0 LT.	4+860.8 LT.			CONST.	(T)	37 S.M.						398 SF±
14C		58-61	4+491.2 RT.	4+636.5 RT.			CONST.	(T)	396 S.M.						INCL. EROSION CONTROL 4263 SF±
			4+492.0 RT.				DRAINAGE	(P)							
			4+493.4 RT.	4+552.7 RT.			SLOPE	(T)	76 S.M.						INCL. EROSION CONTROL 818 SF±
			4+639.0 RT.				DRIVE	(T)							4.0M(13') GRAVEL
			4+640.5 RT.	4+845.0 RT.			CONST.	(T)	659 S.M.						7,094 SF±
			4+648.6 RT.	4+714.9 RT.			SLOPE	(T)	64 S.M.						689 SF±
			4+739.6 RT.	4+845.0 RT.			SLOPE	(T)	330 S.M.						3552 SF±
			4+839.4 RT.	4+881.8 RT.			CUL., DIT. & DR.	(P)							INCL. DRAIN INLET
			4+847.0 RT.				DRIVE	(T)							4.0M(13') GRAVEL
			4+849.0 RT.	4+998.2 RT.			SLOPE	(T)	266 S.M.						2863 SF±
			4+849.0 RT.	5+262.0 RT.			CONST.	(T)	0.13HA						0.32A±; INCL. EROSION CONTROL &
															SNOW FENCE
			4+998.2 RT.	5+001.8 RT.			INSTALL & MAINTAIN	(P)	17 S.M.						SEDIMENT TRAP, 183 SF±
			5+001.8 RT.	5+020.0 RT.			SLOPE	(T)	51 S.M.						INCL. EROSION CONTROL 549 SF±
			5+012.6 RT.	5+025.3 RT.			SLOPE	(P)	19 S.M.						INCL. TEMP. EROSION CONTROL 205 SF±
			5+020.0 RT.	5+262.0 RT.			SLOPE	(T)	678 S.M.						INCL. EROSION CONTROL 7298 SF ±
			5+020.0 RT.				CUL., DR.	(P)							
			5+021.8 RT.	5+025.2 RT.			CUL., DIT.	(P)							
			5+140.0 RT.				CUL., DR.	(P)							
			5+156.0 RT.				CUL., DIT.	(P)							
			5+258.4 RT.	5+268.4 RT.			CULVERT	(T)							
			5+264.0 RT.				DRIVE	(T)							4.1M(13') FIELD DRIVE
			5+266.1 RT.	5+433.8 RT.			SLOPE	(T)	399 S.M.						4295 SF±
			5+266.1 RT.	5+433.4 RT.			CONST.	(T)	530 S.M.						5705 SF±
14D		61	TH24 21+045.5 LT.	TH24 21+053.8 LT.			SLOPE	(T)	11 S.M.						118 SF±
			5+511.9 RT.	5+518.9 RT.			SLOPE	(T)	11 S.M.						118 SF±; INCLUDES SNOW FENCE
			5+529.0 RT.				SIDEWALK	(T)							1M(3'±) PORTLAND CEMENT CONCRETE
			5+575.0 RT.				DRIVE	(T)							4.0M(13') GRAVEL
			5+580.5 RT.	5+593.2 RT.			INSTALL	(T)	10 S.M.						EROSION CONTROL 108 SF±
14E		61	5+628.0 LT.				DRIVE	(T)							5.0M(16.5') GRAVEL
			5+623.0 LT.	5+632.0 LT.			REMOVE	(T)							FENCE
15	SHEPARD, VALERIE J. &	57-58	4+392.4 RT.	4+408.7 RT.			UTILITY EASE.	(P)	31 S.M.			FRANKLIN			334 SF±
	TAYLOR, JOHN		4+392.4RT.	4+414.9 RT.			SLOPE	(T)	41 S.M.						151 SF±
			4+417.0 RT.				DRIVE	(T)							5.5M(18') GRAVEL
			4+421.8 RT.	4+497.0 RT.			SLOPE	(T)	161 S.M.						INCL. EROSION CONTROL 1733 SF±
			4+460.0 RT.				CUL., DR.	(P)							
			4+471.7 RT.	4+493.4 RT.			INSTALL	(T)	38 S.M.						EROSION CONTROL 409 SF±
			4+492.0 RT.				CUL., DIT. & DR.	(P)							

TABLE OF REVISIONS

REVISION NO.	SHEET NO.	DESCRIPTION	DATE

PLAN LEGEND

- EXISTING RIGHT-OF-WAY
- TAKING WITH ACCESS
- TAKING WITHOUT ACCESS
- CLEAR ZONE (CZ)
- PROPERTY LINE (P / L)
- TOE OF SLOPE
- TOP OF CUT
- SLOPE RIGHT (SR (P))
- CONSTRUCTION RIGHT (CONST. (T))

(P) -PERMANENT
(T) -TEMPORARY
DR. -DRAINAGE RIGHT
DIT. -DITCHING RIGHT
CH. -CHANNEL RIGHT
DRIVE -DRIVE RIGHT
CUL. -CULVERT RIGHT
C&T -CLEARING & TRIMMING RIGHT
SR -SLOPE RIGHT
UE -UTILITY EASEMENT

DATE PLOTTED: 04/11/2005

APPROVED: ROGER P. DUMAS DATE: 10-15-03
CHIEF, PLANS & TITLES

PROJECT NAME: HIGHGATE-FRANKLIN
PROJECT NUMBER: STP RS 0301(1) SA

FILE NAME: rc060d.xls
PROJECT LEADER: DELLASANTA
DESIGNED BY: SQUAD B
R.O.W. SHEET 40 OF 73
PLOT DATE: 06/14/04
DRAWN BY: GJF
CHECKED BY: EGP
SHEET 34 OF 450

STATE OF VERMONT
AGENCY OF TRANSPORTATION

RIGHT - OF - WAY DETAIL SHEET

Metric

TABLE OF PROPERTY ACQUISITION

PARCEL NO.	PROPERTY OWNER	SHEET NO.	BEGINNING STATION	ENDING STATION	TAKE	REMAINDER	RIGHT			RECORDING DATA					REMARKS
					AREA ±	AREA ±	TYPE	(T)/(P)	AREA ±	TITLE	DATE	TOWN / CITY	BOOK	PAGE	
16	COLUMB, CEDRIC D. &	59	4+860.8 LT.	4+870.3 LT.			SLOPE	(T)	25 S.M.			FRANKLIN			269 SF±
	ANNETTE M.		4+860.8 LT.	4+871.1 LT.			CONST.	(T)	30 S.M.						323 SF±
			4+872.0 LT.				DRIVE	(T)							6M(20') GRAVEL
			4+876.0 LT.	4+919.6 LT.			SLOPE	(T)	146 S.M.						1572 SF±
			4+881.9 LT.	4+931.5 LT.			INSTALL	(T)	96 S.M.						EROSION CONTROL &
															SNOW FENCE 1033 SF±
			4+899.6 LT.	4+911.0 LT.			REMOVE	(T)							THREE TREES
			4+935.0 LT.				DRIVE	(T)							3.7M(12') GRAVEL
			4+939.0 LT.	4+946.6 LT.			SLOPE	(T)	6 S.M.						65 SF±
			4+941.0 LT.	4+955.6 LT.			INSTALL	(T)	21 S.M.						EROSION CONTROL &
															SNOW FENCE 226 SF±
			4+981.4 LT.	4+994.8 LT.			INSTALL	(T)	25 S.M.						EROSION CONTROL 269 SF±
			4+985.6 LT.	4+994.7 LT.			SLOPE	(T)	19 S.M.						205 SF±
17A	RAINVILLE, ADRIAN C. &	59-61	5+480.00 LT.	5+502.77 LT.	129 S.M.							FRANKLIN			1388 SF±
	MARIE Y.		4+994.5 LT.	4+998.2 LT.			SLOPE	(T)	19 S.M.						205 SF±
			4+994.7 LT.	5+488.5 LT.			CONST.	(T)	0.15HA						0.36A±; INCL. EROSION CONTROL &
															SNOW FENCE
			4+998.2 LT.	5+001.8 LT.			INSTALL & MAINTAIN	(P)	22 S.M.						SEDIMENT TRAP, 237 SF±
			5+001.8 LT.	5+109.5 LT.			SLOPE	(T)	265 S.M.						2853 SF±; INCL. EROSION CONTROL
			5+017.0 LT.	5+041.4 LT.			SLOPE	(P)	23 S.M.						INCL. TEMP. EROSION CONTROL 248 SF±
			5+028.9 LT.	5+032.2 LT.			CUL., DIT. & DR.	(P)							
			5+125.5 LT.	5+195.3 LT.			SLOPE	(T)	168 S.M.						1808 SF±, INCL. EROSION CONTROL
			5+140.0 LT.				CUL., DR.	(P)							
			5+156.0 LT.				CUL., DIT. & DR.	(P)							
			5+156.0 LT.	5+160.0 LT.			REMOVE	(T)							CULVERT
			5+160.0 LT.				CUL., DR.	(P)							
			5+285.5 LT.	5+484.2 LT.			SLOPE	(T)	885 S.M.						9526 SF±
			5+460.0 LT.				CUL., DR.	(P)							
			TH15 22+016.7 LT.	TH15 22+078.0 LT.			CONST.	(T)	197 S.M.						2121 SF±
			TH15 22+019.0 LT.	TH15 22+074.4 LT.			SLOPE	(T)	133 S.M.						1432 SF±
			TH15 22+070.0 LT.				CUL., DIT. & DR.	(P)							
17B		61	5+516.5 LT.	5+517.1 LT.			SLOPE	(T)	1 S.M.						11 SF±
			TH15 22+074.2 RT.	5+615.7 LT.			CONST.	(T)	345 S.M.						3714 SF±; INCL. SNOW FENCE
			5+528.6 LT.	5+571.8 LT.			SLOPE	(T)	50 S.M.						538 SF±
			5+552.8 LT.				REMOVE	(T)							TREE
			5+580.0 LT.				DRAINAGE	(P)							
			TH15 22+023.5 RT.	TH15 22+077.0 RT.			REMOVE & RESET	(T)							FENCE
			5+576.2 LT.	5+583.3 LT.			REMOVE & RESET	(T)							FENCE
18	JENSEN, RICHARD J. JR. &	61	5+480.00 RT.	5+497.16 RT.	105 S.M.							FRANKLIN			1130 SF±
	MARIANNE M.		5+432.7 RT.	5+485.4 RT.			CONST.	(T)	154 S.M.						1658 SF±
			5+433.3 RT.	5+480.8 RT.			SLOPE	(T)	92 S.M.						990 SF±
			5+479.0 RT.	5+480.0 RT.			CUL., DR.	(P)							
19A	VIETA, CARL D.	61-62	5+735.0 LT.				DRIVE	(T)				FRANKLIN			11.0M(36') GRAVEL
			5+764.0 LT.				DRIVE	(T)							3.7M(12') GRAVEL
			5+767.0 LT.	5+800.7 LT.			SLOPE	(T)	47 S.M.						506 SF±
19B		61	5+721.9 RT.	5+744.2 RT.			CONST.	(T)	32 S.M.						344 SF±
20A	DELETED														FORMERLY GAGNE
20B	GAGNE, ROGER G. &	62	5+800.1 LT.	6+024.1 LT.			CONST.	(T)	714 S.M.			FRANKLIN			INCL. EROSION CONTROL &
	LOUISE M.														SNOW FENCE 7686 SF±
			5+800.4 LT.	5+918.2 LT.			SLOPE	(T)	509 S.M.						INCL. EROSION CONTROL 5479 SF±
			5+800.68 LT.				REMOVE & RESET	(T)							IRON PIN 7.35M(24.1') LT.
			5+847.2 LT.	5+851.8 LT.			CUL., DIT.	(P)							
			5+918.2 LT.	5+921.8 LT.			INSTALL & MAINTAIN	(P)	29 S.M.						SEDIMENT TRAP, 312 SF±
			5+921.8 LT.	5+995.1 LT.			SLOPE	(T)	276 S.M.						2971 SF±
			5+976.2 LT.	6+020.0 LT.			REMOVE & RESET	(T)							FENCE
			5+980.0 LT.				CUL., DR.	(P)							
			6+023.2 LT.	6+027.6 LT.			DRIVE	(T)							GRAVEL
	CONTINUED ON NEXT SHEET														

TABLE OF REVISIONS

REVISION NO.	SHEET NO.	DESCRIPTION	DATE

PLAN LEGEND

- EXISTING RIGHT-OF-WAY
- TAKING WITH ACCESS
- TAKING WITHOUT ACCESS
- CLEAR ZONE (CZ)
- PROPERTY LINE (P / L)
- TOE OF SLOPE
- TOP OF CUT
- SLOPE RIGHT (SR (P))
- CONSTRUCTION RIGHT (CONST. (T))

(P) -PERMANENT
(T) -TEMPORARY
DR. -DRAINAGE RIGHT
DIT. -DITCHING RIGHT
CH. -CHANNEL RIGHT
DRIVE -DRIVE RIGHT
CUL. -CULVERT RIGHT
C&T -CLEARING & TRIMMING RIGHT
SR -SLOPE RIGHT
UE -UTILITY EASEMENT

APPROVED: ROGER P. DUMAS DATE: 10-15-03
CHIEF, PLANS & TITLES

DATE PLOTTED: 04/11/2005

PROJECT NAME: HIGHGATE-FRANKLIN
PROJECT NUMBER: STP RS 0301(1) SA

FILE NAME: rc060d.xls
PROJECT LEADER: DELLASANTA
DESIGNED BY: SQUAD B
R.O.W. SHEET 41 OF 73

PLOT DATE: 10/15/03
DRAWN BY: GJF
CHECKED BY: EGP
SHEET 35 OF 450

STATE OF VERMONT
AGENCY OF TRANSPORTATION

RIGHT - OF - WAY DETAIL SHEET

Metric

TABLE OF PROPERTY ACQUISITION

PARCEL NO.	PROPERTY OWNER	SHEET NO.	BEGINNING STATION	ENDING STATION	TAKE	REMAINDER	RIGHT			RECORDING DATA					REMARKS
					AREA ±	AREA ±	TYPE	(T)/(P)	AREA ±	TITLE	DATE	TOWN / CITY	BOOK	PAGE	
	CONTINUED FROM PREVIOUS SHEET														
20C	GAGNE, ROGER G. &	68-72	9+192.00 RT.	9+210.06 RT.	156 S.M.										1679 SF±
	LOUISE M.		7+815.7 RT.	7+944.6 RT.			SLOPE	(P)	239 S.M.						INCL. TEMP. EROSION CONTROL 2573 SF±
			7+816.5 RT.	7+825.1 RT.			REMOVE & RESET	(T)							FENCE
			7+820.0 RT.	8+582.3 RT.			CONST.	(T)	0.22HA						0.55A±, INCL. EROSION CONTROL &
															SNOW FENCE
			7+900.0 RT.	7+961.3 RT.			SLOPE	(T)	140 S.M.						INCL. EROSION CONTROL 1507 SF±
			7+920.0 RT.				CUL., DIT. & DR.	(P)							
			8+008.9 RT.	8+137.9 RT.			SLOPE	(P)	198 S.M.						INCL. TEMP. EROSION CONTROL 2131 SF±
			8+020.0 RT.				DRAINAGE	(P)							
			8+080.0 RT.	8+120.0 RT.			SLOPE	(T)	48 S.M.						517 SF±, INCL. EROSION CONTROL
			8+086.3 RT.				CUL., DIT. & DR.	(P)							
			8+225.1 RT.	REV. 8+320.1 RT.			SLOPE	(P)	325 S.M.						3498 SF±
			REV. 8+300.0 RT.	REV. 8+340.0 RT.			SLOPE	(T)	27 S.M.						291 SF±
			REV. 8+302.6 RT.				CUL., DIT. & DR.	(P)							
			REV. 8+358.5 RT.	8+472.5 RT.			SLOPE	(P)	370 S.M.						INCL. TEMP. EROSION CONTROL 3983 SF±
			REV. 8+371.6 RT.				CUL., DR.	(P)							
			8+440.0 RT.	8+465.0 RT.			SLOPE	(T)	53 S.M.						INCL. EROSION CONTROL 571 SF±
			8+455.0 RT.				CUL., DIT. & DR.	(P)							
			8+465.7 RT.	8+560.0 RT.			SLOPE	(T)	202 S.M.						2174 SF±
			8+480.0 RT.				CUL., DR.	(P)							
			8+585.0 RT.				DRIVE	(T)							4.5M(15') GRAVEL
			8+587.9 RT.	8+592.9 RT.											EXCEPT & RESERVE SHED
			8+592.6 RT.	8+623.7 RT.			CONST.	(T)	89 S.M.						958 SF±
			8+606.5 RT.	8+623.7 RT.			SLOPE	(T)	18 S.M.						194 SF±
			8+626.0 RT.				DRIVE	(T)							4.0M(13') GRAVEL
			8+627.7 RT.	8+762.4 RT.			CONST.	(T)	640 S.M.						INCL. EROSION CONTROL &
															SNOW FENCE 6889 SF±
			8+627.7 RT.	8+762.4 RT.			SLOPE	(T)	406 S.M.						INCL. EROSION CONTROL 4370 SF±
			8+640.0 RT.				CUL., DR.	(P)							
			8+736.7 RT.	8+745.2 RT.			CUL., DIT. & DR.	(P)	26 S.M.						INCL. HEADWALLS & STONE FILL 280 SF±
			8+758.9 RT.	8+770.4 RT.			CULVERT	(T)							
			8+761.3 RT.	8+761.8 RT.			INSTALL & MAINTAIN	(P)							GUARDRAIL
			8+764.0 RT.				DRIVE	(T)							3.6M(12') GRAVEL
			8+766.1 RT.	9+192.0 RT.			CONST.	(T)	0.14HA						0.35A±, INCL. SNOW FENCE
			8+766.3 RT.	8+775.1 RT.			SLOPE	(T)	6 S.M.						65 SF±
			8+784.9 RT.	8+818.2 RT.			SLOPE	(T)	81 S.M.						872 SF±
			8+804.1 RT.	8+806.4 RT.			INSTALL	(T)							FIELD DRAIN
			8+818.2 RT.	8+821.8 RT.			INSTALL & MAINTAIN	(P)	14 S.M.						SEDIMENT TRAP 151 SF±
			8+821.8 RT.	8+900.0 RT.			SLOPE	(T)	111 S.M.						1195 SF±
			8+897.6 RT.	9+127.0 RT.			SLOPE	(P)	711 S.M.						7653 SF±
			9+120.0 RT.	9+192.0 RT.			SLOPE	(T)	222 S.M.						2390 SF±
21A	McCURLEY, CALVIN R. JR. & JANICE A.	63-64	6+403.3 RT.	6+505.0 RT.			SLOPE	(T)	265 S.M.			FRANKLIN			2852 SF±
			6+403.3 RT.	6+505.0 RT.			CONST.	(T)	327 S.M.						INCL. EROSION CONTROL 3520 SF±
			6+507.0 RT.				DRIVE	(T)							4.0M(13') GRAVEL
			6+509.0 RT.	6+589.5 RT.			SLOPE	(T)	336 S.M.						INCL. EROSION CONTROL 3617 SF±
			6+509.0 RT.	6+598.7 RT.			CONST.	(T)	328 S.M.						INCL. EROSION CONTROL &
															SNOW FENCE 3531 SF±
			6+550.4 RT.	6+560.1 RT.			CUL.,DIT. & DR.	(P)							
			TH 25 23+016.0 RT.				DRIVE	(T)							4.9M(16') GRAVEL
			TH 25 23+040.0 RT.				DRIVE	(T)							7.0M(23') GRAVEL
21B		64-66	6+624.66 RT.	6+640.65 RT.	102 S.M.										1098 SF±
			6+640.65 RT.	6+776.1 RT.			SLOPE	(T)	587 S.M.						6319 SF±
			6+640.7 RT.	6+783.7 RT.			CONST.	(T)	453 S.M.						INCL. PDF & PLANTING 16 TREES 4876 SF±
			6+630.0 RT.	6+737.7 RT.			REMOVE & RESET	(T)							FENCE
			6+816.1 RT.				REMOVE & RESET	(T)							FENCE
			6+816.4 RT.	6+827.6 RT.			CONST.	(T)	36 S.M.						388 SF±
			6+816.4 RT.	6+827.6 RT.			SLOPE	(T)	17 S.M.						183 SF±
			6+830.0 RT.				DRIVE	(T)							4.0M(13') GRAVEL
			6+831.6 RT.	6+900.0 RT.			SLOPE	(T)	271 S.M.						2917 SF±
			6+831.6 RT.	7+203.5 RT.			CONST.	(T)	0.12HA						0.29A±; INCL. EROSION CONTROL &
															SNOW FENCE, PDF, &
															PLANTING ONE SHRUB
			6+880.0 RT.				CUL., DR.	(P)							
			6+894.9 RT.	7+203.5 RT.			SLOPE	(P)	689 S.M.						7417 SF±
			7+097.0 RT.				REMOVE	(T)							TREE
			TH25 23+014.0 LT.	TH25 23+056.0 LT.			REMOVE & RESET	(T)							FENCE

TABLE OF REVISIONS

REVISION NO.	SHEET NO.	DESCRIPTION	DATE

PLAN LEGEND

- EXISTING RIGHT-OF-WAY
- TAKING WITH ACCESS
- TAKING WITHOUT ACCESS
- CLEAR ZONE (CZ)
- PROPERTY LINE (P / L)
- TOE OF SLOPE
- TOP OF CUT
- SLOPE RIGHT (SR (P))
- CONSTRUCTION RIGHT (CONST. (T))

(P) -PERMANENT
(T) -TEMPORARY
DR. -DRAINAGE RIGHT
DIT. -DITCHING RIGHT
CH. -CHANNEL RIGHT
DRIVE -DRIVE RIGHT
CUL. -CULVERT RIGHT
C&T -CLEARING & TRIMMING RIGHT
SR -SLOPE RIGHT
UE -UTILITY EASEMENT

DATE PLOTTED: 04/11/2005

APPROVED: ROGER P. DUMAS DATE: 10-15-03
CHIEF, PLANS & TITLES

PROJECT NAME: **HIGHGATE-FRANKLIN**
PROJECT NUMBER: **STP RS 0301(1) SA**

FILE NAME: **rc060d.xls** PLOT DATE: **10/15/03**
PROJECT LEADER: **DELLASANTA** DRAWN BY: **GJF**
DESIGNED BY: **SQUAD B** CHECKED BY: **EGP**
R.O.W. SHEET 42 OF 73 SHEET **36** OF **450**

STATE OF VERMONT
AGENCY OF TRANSPORTATION

RIGHT - OF - WAY DETAIL SHEET

Metric

TABLE OF PROPERTY ACQUISITION

PARCEL NO.	PROPERTY OWNER	SHEET NO.	BEGINNING STATION	ENDING STATION	TAKE	REMAINDER	RIGHT			RECORDING DATA					REMARKS
					AREA ±	AREA ±	TYPE	(T)/(P)	AREA ±	TITLE	DATE	TOWN / CITY	BOOK	PAGE	
22	COREY, ROGER R. & PAULA M.	64	6+466.4 LT.	6+509.5 LT.			SLOPE	(T)	156 S.M.			FRANKLIN			1679 SF±
			6+466.7 LT.	6+509.5 LT.			CONST.	(T)	143 S.M.						INCL. EROSION CONTROL &
															SNOW FENCE 1539 SF±
			6+505.0 LT.	6+518.2 LT.			CULVERT	(T)							
			6+511.0 LT.				DRIVE	(T)							4.0M(13') GRAVEL
			6+513.5 LT.	6+521.7 LT.			CONST.	(T)	24 S.M.						258 SF±
			6+513.5 LT.	6+520.7 LT.			SLOPE	(T)	24 S.M.						258 SF±
			6+519.40 LT.	6+519.45 LT.			REPLACE	(T)							SET NEW IRON PIN AT
															STA. 6+519.45 6.77M(22') LT.
23	COREY, REGINALD D.	64	6+519.5 LT.	6+539.3 LT.			SLOPE	(T)	89 S.M.			FRANKLIN			958 SF±
			6+533.8 LT.	6+549.1 LT.			CULVERT	(T)							
			6+537.8 LT.				REMOVE	(T)							STONE HEADWALL
			6+541.0 LT.				DRIVE	(T)							4.0M(13') GRAVEL
			6+543.3 LT.	6+640.0 LT.			SLOPE	(T)	376 S.M.						INCL. EROSION CONTROL 4047 SF±
			6+543.3 LT.	6+656.7 LT.			CONST.	(T)	334 S.M.						INCL. EROSION CONTROL &
															SNOW FENCE 3595 SF±
			6+572.5 LT.	6+581.4 LT.			CUL. & DIT.	(P)							
			6+640.0 LT.				DRAINAGE	(P)							1851 SF±
			6+658.0 LT.				DRIVE	(T)							4.5M(15') GRAVEL
			6+660.3 LT.	6+718.3 LT.			CONST.	(T)	172 S.M.						INCL. PDF & SNOW FENCE, 1851 SF±
24	COREY, KENNETH D. & PATTIA.	64-65	6+729.1 LT.				REMOVE	(T)				FRANKLIN			TREE
			6+761.4 LT.	6+771.0 LT.			SLOPE	(T)	11 S.M.						118 SF±
			6+765.7 LT.				REMOVE	(T)							TREE
			6+766.0 LT.	6+771.3 LT.			REMOVE	(T)							STONE WALL; STOCKPILE ON PROPERTY
			6+768.2 LT.	6+779.1 LT.			CULVERT	(T)							
			6+774.0 LT.				DRIVE	(T)							5.0M(16') GRAVEL
			6+774.3 LT.	6+837.4 LT.			SLOPE	(T)	132 S.M.						1425 SF±
			6+778.2 LT.	6+785.7 LT.			REMOVE	(T)							STONE WALL; STOCKPILE ON PROPERTY
			6+779.8 LT.	6+785.7 LT.			REMOVE	(T)							SEVERAL SMALL MAPLE TREES
			6+823.0 LT.	6+839.9 LT.			REMOVE	(T)							7 MEDIUM MAPLE TREES
			6+842.1 LT.	6+909.4 LT.			CONST.	(T)	214 S.M.						2304 SF±, INCL. PDF
			6+840.0 LT.				DRIVE	(T)							4.0M(13') GRAVEL
			6+842.6 LT.	6+909.4 LT.			SLOPE	(T)	91 S.M.						980 SF±
25	VORSE, LILLIAN	65	6+786.9 RT.	6+791.9 RT.								FRANKLIN			EXCEPT & RESERVE GARAGE
			6+795.9 RT.												EXCEPT & RESERVE WELL & APPURTENANCES
			6+805.5 RT.				REMOVE & RESET	(T)							FLAG POLE
			6+810.0 RT.				DRIVE	(T)							7.0M(23') GRAVEL
			6+813.1 RT.	6+816.4 RT.			SLOPE	(T)	2 S.M.						22 SF±
26A	PATTERSON, THOMAS R. & JERIL.	65	6+909.37 LT.				REMOVE & RESET	(T)				FRANKLIN			IRON PIN TO 7.34M(24') LT.
			6+609.4 LT.	6+932.6 LT.			SLOPE	(T)	16 S.M.						172 SF±
			6+609.4 LT.	7+027.9 LT.			CONST.	(T)	312 S.M.						INCL. PDF 3358 SF±
			7+006.3 LT.	7+027.9 LT.			SLOPE	(T)	37 S.M.						398 SF±
			7+030.0 LT.				DRIVE	(T)							4.1M(13') GRAVEL
			7+032.0 LT.	7+046.5 LT.			CONST.	(T)	30 S.M.						323 SF±, INCL. PDF
26B		65-66	7+046.5 LT.	7+052.1 LT.			CONST.	(T)	13 S.M.						140 SF±, INCL. PDF
			7+063.0 LT.				DRIVE	(T)							4.0M(13') GRAVEL
			7+055.6 LT.	7+070.1 LT.			SLOPE	(T)	7 S.M.						75 SF±
			7+055.6 LT.	7+330.6 LT.			CONST.	(T)	866 S.M.						INCL. EROSION CONTROL & PDF 9322 SF±
			7+163.1 LT.	7+319.9 LT.			SLOPE	(T)	495 S.M.						INCL. EROSION CONTROL 5328 SF±
			7+306.0 LT.				CUL. & DIT.	(P)							

TABLE OF REVISIONS

REVISION NO.	SHEET NO.	DESCRIPTION	DATE

DATE PLOTTED: 04/11/2005

PLAN LEGEND

- EXISTING RIGHT-OF-WAY
- TAKING WITH ACCESS
- TAKING WITHOUT ACCESS
- CLEAR ZONE (CZ)
- PROPERTY LINE (P / L)
- TOE OF SLOPE
- TOP OF CUT
- SLOPE RIGHT (SR (P))
- CONSTRUCTION RIGHT (CONST. (T))

(P) -PERMANENT
(T) -TEMPORARY
DR. -DRAINAGE RIGHT
DIT. -DITCHING RIGHT
CH. -CHANNEL RIGHT
DRIVE -DRIVE RIGHT
CUL. -CULVERT RIGHT
C&T -CLEARING & TRIMMING RIGHT
SR -SLOPE RIGHT
UE -UTILITY EASEMENT

APPROVED: ROGER P. DUMAS DATE: 10-15-03
CHIEF, PLANS & TITLES

PROJECT NAME: **HIGHGATE-FRANKLIN**
PROJECT NUMBER: **STP RS 0301(1) SA**

FILE NAME: **rc060d.xls** PLOT DATE: **10/15/03**
PROJECT LEADER: **DELLASANTA** DRAWN BY: **GJF**
DESIGNED BY: **SQUAD B** CHECKED BY: **EGP**
R.O.W. SHEET 43 OF 73 SHEET **37** OF **450**

STATE OF VERMONT
AGENCY OF TRANSPORTATION

RIGHT - OF - WAY DETAIL SHEET

Metric

TABLE OF PROPERTY ACQUISITION

PARCEL NO.	PROPERTY OWNER	SHEET NO.	BEGINNING STATION	ENDING STATION	TAKE	REMAINDER	RIGHT			RECORDING DATA					REMARKS
					AREA ±	AREA ±	TYPE	(T)/(P)	AREA ±	TITLE	DATE	TOWN / CITY	BOOK	PAGE	
27	FORSYTH, THOMAS IV & BRENDA G.	66-68	7+203.4 RT.	7+363.7 RT.			SLOPE	(P)	398 S.M.			FRANKLIN			INCL. TEMP. EROSION CONTROL 4284 SF±
			7+203.4 RT.	7+503.6 RT.			CONST.	(T)	945 S.M.						INCL. EROSION CONTROL &
															SNOW FENCE, 10,172 SF±
			7+220.0 RT.				CUL. & DR.	(P)							
			7+306.0 RT.				CUL., DIT. & DR.	(P)							
			7+341.2 RT.	7+344.0 RT.			REMOVE & RESET	(T)							FENCE
			7+380.0 RT.				CUL. & DR.	(P)							
			7+360.0 RT.	7+502.7 RT.			SLOPE	(T)	0.11 HA						0.28A±
			7+504.0 RT.				DRIVE	(T)							3.9M(13') GRAVEL
			7+506.0 RT.	7+528.9 RT.			SLOPE	(T)	114 S.M.						1227 SF±
			7+506.3 RT.	7+643.0 RT.			REMOVE & RESET	(T)							FENCE
			7+506.7 RT.	7+747.6 RT.			CONST.	(T)	0.10 HA						INCL. EROSION CONTROL AND
															PDF & SNOW FENCE 0.25A±
			7+506.7 RT.				REMOVE	(T)							STUMP
			7+533.0 RT.				REMOVE	(T)							CULVERT
			7+520.0 RT.	7+561.5 RT.			SLOPE	(P)	132 S.M.						INCL. TEMP. EROSION CONTROL 1421 SF±
			7+540.0 RT.				CUL., DIT. & DR.	(P)							
			7+560.0 RT.	7+747.6 RT.			SLOPE	(T)	0.13 HA						INCL. EROSION CONTROL 0.32A±
			7+636.0 RT.				CUL., DIT. & DR.	(P)							
			7+674.2 RT.				REMOVE	(T)							PIPE
			7+749.0 RT.				DRIVE	(T)							4.0M(13') GRAVEL
			7+751.6 RT.	7+820.0 RT.			SLOPE	(T)	176 S.M.						INCL. EROSION CONTROL 1895 SF±
			7+751.6 RT.	7+825.1 RT.			CONST.	(T)	231 S.M.						INCL. EROSION CONTROL & PDF 2487 SF±
			7+797.6 RT.	7+820.0 RT.			SLOPE	(P)	28 S.M.						INCL. TEMP. EROSION CONTROL 301 SF±
			7+800.0 RT.				CUL., DIT. & DR.	(P)							
28	DEUSO, HOWARD L. & PAMELA J.	66-67	7+377.7 LT.	7+402.5 LT.			SLOPE	(T)	11 S.M.			FRANKLIN			118 SF±
			7+405.0 LT.				DRIVE	(T)							3.9M(13') PAVED
			7+406.9 LT.	7+435.7 LT.			SLOPE	(T)	18 S.M.						194 SF±
			7+475.07 LT.	7+475.05 LT.			REMOVE & RESET	(T)							IRON PIN TO 7.42M(24') LT.
			7+443.3 LT.	7+475.2 LT.			SLOPE	(T)	25 S.M.						269 SF±
29	WRIGHT, GERALDINE S.	67-68	7+475.07 LT.	7+475.05 LT.			REMOVE & RESET	(T)				FRANKLIN			IRON PIN TO 7.42M(24') LT.
			7+475.1 LT.	7+498.4 LT.			SLOPE	(T)	52 S.M.						553 SF±
			7+498.4 LT.	7+501.9 LT.			INSTALL & MAINTAIN	(P)	17 S.M.						SEDIMENT TRAP 183 SF±
			7+501.9 LT.	7+615.3 LT.			SLOPE	(T)	276 S.M.						2971 SF±
			7+563.7 LT.				REMOVE	(T)							TREE
			7+618.0 LT.				DRIVE	(T)							5.5M(18') PAVED
			7+621.1 LT.	7+637.3 LT.			SLOPE	(T)	19 S.M.						208 SF±
			7+621.6 LT.	7+661.7 LT.			REMOVE	(T)							FOUR SHRUBS
			7+643.6 LT.	7+648.0 LT.			SLOPE	(T)	2.5 S.M.						26 SF±
			7+653.0 LT.				DRIVE	(T)							10.0M(33') PAVED
			7+658.4 LT.	7+680.0 LT.			SLOPE	(T)	43 S.M.						463 SF±
			7+674.3 LT. & RT.				ALL R. T. & I.								PIPE
			7+674.3 LT.				REMOVE	(T)							PIPE
			7+711.1 LT.	7+785.8 LT.			SLOPE	(T)	79 S.M.						850 SF±
			7+783.5 LT.	7+785.8 LT.			REMOVE	(T)							STONE WALL
30A	TREMBLAY, GERARD J. SR. & PAULA	68	7+780.5 LT.	7+819.3 LT.			CONST.	(T)	112 S.M.			FRANKLIN			1206 SF±, INCL. SNOW FENCE
			7+781.0 LT.	7+815.0 LT.			REMOVE	(T)							STONE WALL
			7+784.3 LT.	7+816.7 LT.			SLOPE	(T)	51 S.M.						549 SF±
30B		68-69	7+920.6 LT.	7+935.5 LT.			SLOPE	(T)	14 S.M.						151 SF±
			7+920.6 LT.	8+042.4 LT.			CONST.	(T)	387 S.M.						4166 SF±, INCL. PDF
			7+944.6 LT.	8+042.4 LT.			SLOPE	(T)	234 S.M.						2519 SF±
			8+013.2 LT.	8+033.2 LT.			REMOVE	(T)							FENCE
31	BURLEY, VIBEKE B. & JOHN S.	68	7+819.3 LT.	7+824.2 LT.			CONST.	(T)	12 S.M.			FRANKLIN			129 SF±, INCL. SNOW FENCE
			7+827.0 LT.				DRIVE	(T)							5M(16') GRAVEL
			7+829.2 LT.	7+920.6 LT.			CONST.	(T)	227 S.M.						2443 SF±, INCL. PDF & SNOW FENCE
			7+832.0 LT.	7+880.0 LT.			REMOVE	(T)							STONE WALL
			7+834.0 LT.	7+842.2 LT.			SLOPE	(T)	1.0 S.M.						11 SF±
			7+886.2 LT.	7+898.1 LT.			SLOPE	(T)	24 S.M.						258 SF±
			7+898.1 LT.	7+901.6 LT.			INSTALL & MAINTAIN	(P)	14 S.M.						SEDIMENT TRAP, 151 SF±
			7+901.6 LT.	7+920.6 LT.			SLOPE	(T)	55 S.M.						180 SF±

TABLE OF REVISIONS

REVISION NO.	SHEET NO.	DESCRIPTION	DATE

PLAN LEGEND

- EXISTING RIGHT-OF-WAY
- TAKING WITH ACCESS
- TAKING WITHOUT ACCESS
- CLEAR ZONE (CZ)
- PROPERTY LINE (P / L)
- TOE OF SLOPE
- TOP OF CUT
- SLOPE RIGHT (SR (P))
- CONSTRUCTION RIGHT (CONST. (T))

(P) -PERMANENT
(T) -TEMPORARY
DR. -DRAINAGE RIGHT
DIT. -DITCHING RIGHT
CH. -CHANNEL RIGHT
DRIVE -DRIVE RIGHT
CUL. -CULVERT RIGHT
C&T -CLEARING & TRIMMING RIGHT
SR -SLOPE RIGHT
UE -UTILITY EASEMENT

APPROVED: ROGER P. DUMAS DATE: 10-15-03
CHIEF, PLANS & TITLES

DATE PLOTTED: 04/11/2005

PROJECT NAME: **HIGHGATE-FRANKLIN**
PROJECT NUMBER: **STP RS 0301(1) SA**

FILE NAME: **rc060d.xls** PLOT DATE: **11/05/03**
PROJECT LEADER: **DELLASANTA** DRAWN BY: **GJF**
DESIGNED BY: **SQUAD B** CHECKED BY: **EGP**
R.O.W. SHEET 44 OF 73 SHEET **38** OF **450**

STATE OF VERMONT
AGENCY OF TRANSPORTATION

RIGHT - OF - WAY DETAIL SHEET

Metric

TABLE OF PROPERTY ACQUISITION

PARCEL NO.	PROPERTY OWNER	SHEET NO.	BEGINNING STATION	ENDING STATION	TAKE	REMAINDER	RIGHT			RECORDING DATA					REMARKS
					AREA ±	AREA ±	TYPE	(T)/(P)	AREA ±	TITLE	DATE	TOWN / CITY	BOOK	PAGE	
32	DUBE, JOHN B.	69	8+042.4 LT.	8+058.9 LT.			SLOPE	(T)	34 S.M.			FRANKLIN			366 SF±
			8+042.5 LT.	8+061.9 LT.			CONST.	(T)	46 S.M.						495 SF±, INCLUDES PDF
			8+055.5 LT.	8+069.4 LT.			CULVERT	(T)							
			8+060.0 LT.				DRIVE	(T)							3.3M(11') GRAVEL
			8+064.1 LT.	8+110.5 LT.			SLOPE	(T)	115 S.M.						INCL. EROSION CONTROL 1238 SF±
			8+068.8 LT.	8+111.0 LT.			CONST.	(T)	125 S.M.						INCL. EROSION CONTROL 1346 SF±
			8+086.0 LT.				CUL. & DIT.	(P)							
			8+118.0 LT.				DRIVE	(T)							4.0M(13') GRAVEL
			8+115.6 LT.	8+208.4 LT.			CONST.	(T)	195 S.M.						INCL. PDF 2099 SF±
			8+187.0 LT.	8+208.4 LT.			SLOPE	(P)	26 S.M.						280 SF±
33	RAYNACK, GEORGE J. JR. & REBECCA A.	69-70	8+208.4 LT.	8+212.4 LT.			SLOPE	(P)	1 S.M.			FRANKLIN			11 SF±
			REV. 8+301.0 LT.	REV. 8+309.0 LT.			DITCH	(P)	19 S.M.						205 SF±
			REV. 8+272.0 LT.				INSTALL	(T)							FIELD DRAIN
			REV. 8+309.0 LT.				DRIVE	(T)							3.7M(12') GRAVEL, INCL. TURNAROUND
34	DURKEE, PAUL M.	70	REV. 8+353.0 LT.				DRIVE	(T)				FRANKLIN			3.5M(12') GRAVEL
			REV. 8+363.8 LT.	REV. 8+378.2 LT.			SLOPE	(T)	59 S.M.						635 SF±, INCL. SNOW FENCE
			REV. 8+378.2 LT.	REV. 8+381.8 LT.			INSTALL & MAINTAIN	(P)	42 S.M.						SEDIMENT TRAP, 452 SF±
			REV. 8+381.8 LT.	REV. 8+385.2 LT.			SLOPE	(T)	40 S.M.						431 SF±
35	DANDURAND, MARC & ANN	70	REV. 8+385.2 LT.	8+411.5 LT.			CONST.	(T)	105 S.M.						1130 SF±
			REV. 8+385.2 LT.	8+410.9 LT.			SLOPE	(T)	106 S.M.						1141 SF±
			REV. 8+385.8 LT.				REMOVE	(T)							STONE WALL
			8+407.4 LT.	8+420.6 LT.			CULVERT	(T)							
			8+412.0 LT.				DRIVE	(T)							2.6M(9') GRAVEL
			8+414.9 LT.	8+478.5 LT.			SLOPE	(T)	293 S.M.						INCL. EROSION CONTROL 3154 SF±
			8+415.3 LT.	8+478.5 LT.			CONST.	(T)	170 S.M.						INCL. EROSION CONTROL & SNOW FENCE; 1830 SF±
			8+455.0 LT.				CUL. & DIT.	(P)							
	SEE FRANKLIN VILLAGE PORTION OF PROJECT FOR PARCELS 36,37 38B														
38A	MAGNANT, TIMOTHY A. & MARTHA E.	73	ah 14+952.8 LT.	ah 14+986.9 LT.			SLOPE	(T)	28 S.M.			FRANKLIN			301 SF±
			ah 14+929.3 LT.	ah 15+024.6 LT.			CONST.	(T)	288 S.M.						3100 SF±
			ah 15+028.0 LT.				DRIVE	(T)							6.5M(21') GRAVEL
	SEE FRANKLIN VILLAGE PORTION OF PROJECT FOR PARCELS 39 THROUGH 57														

TABLE OF REVISIONS

REVISION NO.	SHEET NO.	DESCRIPTION	DATE

PLAN LEGEND

- EXISTING RIGHT-OF-WAY
- TAKING WITH ACCESS
- TAKING WITHOUT ACCESS
- CLEAR ZONE (CZ)
- PROPERTY LINE (P/L)
- TOE OF SLOPE
- TOP OF CUT
- SLOPE RIGHT (SR (P))
- CONSTRUCTION RIGHT (CONST. (T))

(P)	-PERMANENT
(T)	-TEMPORARY
DR.	-DRAINAGE RIGHT
DIT.	-DITCHING RIGHT
CH.	-CHANNEL RIGHT
DRIVE	-DRIVE RIGHT
CUL.	-CULVERT RIGHT
C&T	-CLEARING & TRIMMING RIGHT
SR	-SLOPE RIGHT
UE	-UTILITY EASEMENT

APPROVED: ROGER P. DUMAS DATE: 10-15-03
CHIEF, PLANS & TITLES

DATE PLOTTED: 04/11/2005

PROJECT NAME: **HIGHGATE-FRANKLIN**
PROJECT NUMBER: **STP RS 0301(1) SA**

FILE NAME: **rc060d.xls** PLOT DATE: **10/15/03**
PROJECT LEADER: **DELLASANTA** DRAWN BY: **GJF**
DESIGNED BY: **SQUAD B** CHECKED BY: **EGP**
R.O.W. SHEET 45 OF 73 SHEET **39** OF **450**

STATE OF VERMONT
AGENCY OF TRANSPORTATION

RIGHT - OF - WAY DETAIL SHEET

Metric

TABLE OF PROPERTY ACQUISITION

PARCEL NO.	PROPERTY OWNER	SHEET NO.	BEGINNING STATION	ENDING STATION	TAKE	REMAINDER	RIGHT			RECORDING DATA					REMARKS
					AREA ±	AREA ±	TYPE	(T)/(P)	AREA ±	TITLE	DATE	TOWN / CITY	BOOK	PAGE	
58A	MAGNANT, THOMAS A. & NANCY S.	70-72	8+478.5 LT.	8+578.8 LT.			SLOPE	(T)	104 S.M.			FRANKLIN			1119 SF±
			8+478.7 LT.	8+578.0 LT.			CONST.	(T)	335 S.M.						INCL. EROSION CONTROL &
															SNOW FENCE, 3606 SF±
			8+479.0 LT.	8+578.6 LT.			REMOVE & RESET	(T)							FENCE
			8+556.6 LT.				REMOVE	(T)							STUMP
			8+587.0 LT.				DRIVE	(T)							5.5M(18') GRAVEL
			8+620.0 LT.	8+857.5 LT.			CONST.	(T)	955 S.M.						10,280 S.M.±, INCL. EROSION CONTROL
															& SNOW FENCE
			8+621.1 LT.	8+698.2 LT.			SLOPE	(T)	140 S.M.						1507 SF±
			8+698.2 LT.	8+701.7 LT.			INSTALL & MAINTAIN	(P)	25 S.M.						SEDIMENT TRAP, 269 SF±
			8+701.7 LT.	8+752.3 LT.			SLOPE	(T)	114 S.M.						INCL. EROSION CONTROL, 1277 SF±
			8+744.2 LT.	8+752.3 LT.			CUL., DIT.	(P)							
			8+763.8 LT.	8+798.2 LT.			SLOPE	(T)	79 S.M.						850 SF±
			8+796.2 LT.	8+801.7 LT.			INSTALL & MAINTAIN	(P)	25 S.M.						SEDIMENT TRAP, 269 SF±
			8+800.0 LT.				CUL. & DR.	(P)							
			8+801.7 LT.	8+817.0 LT.			SLOPE	(T)	53 S.M.						571 SF±
			8+846.4 LT.	8+857.5 LT.			SLOPE	(T)	15 S.M.						161 SF±
			8+853.6 LT.	8+865.8 LT.			CULVERT	(T)							INCLUDES SPLASH PAD
			8+860.0 LT.				DRIVE	(T)							5M(16.5') GRAVEL
			8+862.5 LT.	9+220.0 LT.			SLOPE	(P)	0.17 HA						0.42A±
			8+862.5 LT.	9+252.1 LT.			CONST.	(T)	0.12 HA						0.30A±, INCL. PLANTING ONE TREE
			9+018.8 LT.	9+248.5 LT.			REMOVE & RESET	(T)							FENCE
			9+200.0 LT.				CUL. & DR.	(P)							
			9+216.2 LT.	9+228.0 LT.			CUL., DIT. & DR.	(P)							
			9+220.0 LT.	9+251.8 LT.			SLOPE	(T)	98 S.M.						1055 SF±
58B		72-73	ah 14+663.1 LT.	ah 14+667.8 LT.			SLOPE	(T)	9 S.M.						97 SF±
			ah 14+663.1 LT.	ah 14+883.5 LT.			REMOVE & RESET	(T)							FENCE
			ah 14+663.1 LT.	ah 14+667.8 LT.			CONST.	(T)	15 S.M.						161 SF±
			ah 14+670.0 LT.				DRIVE	(T)							4.0M(13') GRAVEL
			ah 14+671.8 LT.	ah 14+802.8 LT.			SLOPE	(T)	441 S.M.						4747 SF±
			ah 14+671.8 LT.	ah 14+802.8 LT.			CONST.	(T)	321 S.M.						3455 SF±
			ah 14+800.0 LT.				CUL. & DR.	(P)							
			ah 14+806.0 LT.				DRIVE	(T)							5.8M(19') GRAVEL
			ah 14+808.6 LT.	ah 14+882.7 LT.			SLOPE	(T)	349 S.M.						3757 SF±
			ah 14+895.0 LT.				DRIVE	(T)							3.8M(12') GRAVEL
			ah 14+897.5 LT.	ah 14+911.0 LT.			SLOPE	(T)	3 S.M.						32 SF±
			ah 14+925.0 LT.				DRIVE	(T)							5.2M(17') GRAVEL
58C		72-73	9+262.4 RT.	ah 14+847.9 RT.			CONST.	(T)	773 S.M.						INCL. EROSION CONTROL &
															PLANTING FIVE TREES, 8321 SF±
			9+263.5 RT.	ah 14+760.0 RT.			REMOVE & RESET	(T)							FENCE
			9+263.9 RT.	ah 14+847.8 RT.			SLOPE	(P)	573 S.M.						6168 SF±
			ah 14+687.0 RT.	ah 14+769.0 RT.			REMOVE	(T)							THREE STUMPS
			ah 14+763.2 RT.				INSTALL	(T)							FIELD DRAIN
			ah 14+800.0 RT.	ah 14+823.8 RT.			REMOVE	(T)							THREE TREES
			ah 14+814.3 RT.				INSTALL	(T)							FIELD DRAIN
			ah 14+846.7 RT.	ah 14+855.1 RT.			REMOVE & RESET	(T)							FENCE
			ah 14+850.0 RT.				DRIVE	(T)							4.0M(13') GRAVEL
			ah 14+851.9 RT.	ah 14+860.3 RT.			SLOPE	(P)	2 S.M.						22 SF±
			ah 14+851.9 RT.	ah 14+893.2 RT.			CONST.	(T)	105 S.M.						1130 SF±
			ah 14+884.1 RT.				INSTALL	(T)							FIELD DRAIN
			ah 14+895.0 RT.				DRIVE	(T)							3.3M(11') GRAVEL
			ah 14+927.0 RT.				DRIVE	(T)							7.5M(25') GRAVEL
			ah 14+957.2 RT.	ah 15+010.8 RT.			ALL R.T.& I.								STONE WALL
			ah 14+960.0 RT.	ah 15+013.2 RT.			CONST.	(T)	110 S.M.						1184 SF±
			ah 15+014.0 RT.				DRIVE	(T)							2.2M(7') GRAVEL
			ah 15+016.2 RT.	ah 15+038.4 RT.			CONST.	(T)	60 S.M.						646 SF±
			ah 15+034.0 RT.	ah 15+038.4 RT.			SLOPE	(T)	1 S.M.						11 SF±

TABLE OF REVISIONS

REVISION NO.	SHEET NO.	DESCRIPTION	DATE

PLAN LEGEND

- EXISTING RIGHT-OF-WAY
- TAKING WITH ACCESS
- TAKING WITHOUT ACCESS
- CLEAR ZONE (CZ)
- PROPERTY LINE (P / L)
- TOE OF SLOPE
- TOP OF CUT
- SLOPE RIGHT (SR (P))
- CONSTRUCTION RIGHT (CONST.(T))

(P) -PERMANENT
(T) -TEMPORARY
DR. -DRAINAGE RIGHT
DIT. -DITCHING RIGHT
CH. -CHANNEL RIGHT
DRIVE -DRIVE RIGHT
CUL. -CULVERT RIGHT
C&T -CLEARING & TRIMMING RIGHT
SR -SLOPE RIGHT
UE -UTILITY EASEMENT

APPROVED: ROGER P. DUMAS DATE: 10-15-03
CHIEF, PLANS & TITLES

DATE PLOTTED: 04/11/2005

PROJECT NAME: **HIGHGATE-FRANKLIN**
PROJECT NUMBER: **STP RS 0301(1) SA**

FILE NAME: **rc060d.xls** PLOT DATE: **10/15/03**
PROJECT LEADER: **DELLASANTA** DRAWN BY: **GJF**
DESIGNED BY: **SQUAD B** CHECKED BY: **EGP**
R.O.W. SHEET 46 OF 73 SHEET **40** OF **450**

STATE OF VERMONT
AGENCY OF TRANSPORTATION

RIGHT - OF - WAY DETAIL SHEET

Metric

TABLE OF PROPERTY ACQUISITION

PARCEL NO.	PROPERTY OWNER	SHEET NO.	BEGINNING STATION	ENDING STATION	TAKE	REMAINDER	RIGHT			RECORDING DATA					REMARKS
					AREA ±	AREA ±	TYPE	(T)/(P)	AREA ±	TITLE	DATE	TOWN / CITY	BOOK	PAGE	
59	WELKER, GARY A. & DEBRA J.	72	TH 37 24+021.4 LT.	TH 37 24+034.9 LT.			SLOPE	(T)	8 S.M.			FRANKLIN			86 SF±
60	BOUDREAU, HARVEY L. & SALLY M.	72	9+251.3 LT.	9+258.7 LT.			SLOPE	(T)	34 S.M.			FRANKLIN			366 SF±
			9+252.5 LT.				REMOVE	(T)							TREE
			9+263.0 LT.				DRIVE	(T)							7.4M(24') GRAVEL
			9+266.0 LT.	9+285.3 LT.			SLOPE	(T)	35 S.M.						377 SF±
			9+280.2 LT.	9+286.8 LT.			REMOVE	(T)							THREE TREES
			ah 14+653.1 LT.	ah 14+663.1 LT.			SLOPE	(T)	12 S.M.						129 SF±
			9+295.6 LT.				SIDEWALK	(T)							1.0M(3') PORTLAND CEMENT CONCRETE
61	MESSIER, MICHAEL L. & BONNIE L.	72	9+240.00 RT.	9+248.61 RT.	46 S.M.										495 SF±
			TH 37 24+018.0 LT.	TH 37 24+021.8 LT.			SLOPE	(T)	5 S.M.						54 SF±
			TH 37 24+021.14 LT.	TH 37 24+021.43 LT.			REMOVE & RESET	(T)							IRON PIN TO 7.58M LT.
62A	LAROCHE, REAL J. & MARIE CLAIRE AND LAROCHE, MATTHEW S.	61-63	5+744.0 RT.	6+148.4 RT.			CONST.	(T)	0.12HA			FRANKLIN			0.31A±; INCL. EROSION CONTROL & SNOW FENCE
			5+765.8 RT.	5+786.0 RT.			SLOPE	(T)	2 S.M.						22 SF±
			5+803.7 RT.	5+974.2 RT.			SLOPE	(T)	407 S.M.						INCL. EROSION CONTROL 4381 SF±
			5+820.0 RT.				CUL., DR.	(P)							
			5+833.9 RT.	5+837.9 RT.			CUL., DIT. & DR.	(P)							
			6+028.2 RT.	6+146.4 RT.			SLOPE	(T)	203 S.M.						2185 SF±
			6+145.5 RT.	6+154.0 RT.			CULVERT	(T)							
			6+150.0 RT.				DRIVE	(T)							3.6M(12') FIELD DRIVE
			6+152.0 RT.	6+153.4 RT.			INSTALL & MAINTAIN	(P)							GUARDRAIL
			6+152.0 RT.	6+384.3 RT.			CONST.	(T)	925 S.M.						INCL. EROSION CONTROL & SNOW FENCE 9957 SF±
			6+167.0 RT.	6+210.1 RT.			SLOPE	(T)	37 S.M.						INCL. EROSION CONTROL 398 SF±
			6+182.7 RT.	6+192.6 RT.			CUL., DIT. & DR.	(P)							INCL. STONE FILL
			6+220.0 RT.				DRAINAGE	(P)							
			6+221.4 RT.	6+238.2 RT.			SLOPE	(T)	29 S.M.						312 SF±
			6+238.2 RT.	6+241.8 RT.			INSTALL & MAINTAIN	(P)	13 S.M.						SEDIMENT TRAP, 140 SF±
			6+241.8 RT.	6+257.0 RT.			SLOPE	(T)	28 S.M.						301 SF±
			6+286.2 RT.	6+384.0 RT.			SLOPE	(T)	361 S.M.						INCL. EROSION CONTROL 3886 SF±
			6+313.4 RT.	6+323.0 RT.			REMOVE	(T)							CULVERT
			6+318.5 RT.	6+321.3 RT.			CUL., DIT. & DR.	(P)							
			6+386.0 RT.				DRIVE	(T)							4.0M(13') GRAVEL
			6+388.3 RT.	6+403.4 RT.			CONST.	(T)	49 S.M.						INCL. EROSION CONTROL 527 SF±
			6+388.5 RT.	6+403.3 RT.			SLOPE	(T)	25 S.M.						269 SF±
62B		62-64	6+029.3 LT.	6+384.3 LT.			CONST.	(T)	0.13HA						0.32A±; INCL. EROSION CONTROL & SNOW FENCE
			6+029.8 LT.	6+158.2 LT.			SLOPE	(T)	281 S.M.						3025 SF±
			6+158.2 LT.	6+161.8 LT.			INSTALL & MAINTAIN	(P)	18 S.M.						SEDIMENT TRAP, 194 SF±
			6+161.8 LT.	6+272.2 LT.			SLOPE	(T)	150 S.M.						INCL. EROSION CONTROL 1615 SF±
			6+185.9 LT.	6+195.7 LT.			CUL. & DIT.	(P)	22 S.M.						INCL. TEMP. EROSION CONTROL; INCL. STONE FILL 237 SF±
			6+287.0 LT.	6+369.2 LT.			SLOPE	(T)	269 S.M.						INCL. EROSION CONTROL 2896 SF±
			6+323.2 LT.	6+325.5 LT.			CUL. & DIT.	(P)							
			6+386.0 LT.				DRIVE	(T)							4.0M(13') GRAVEL
			6+388.3 LT.	6+467.1 LT.			CONST.	(T)	280 S.M.						INCL. EROSION CONTROL & SNOW FENCE 3014 SF±
			6+398.1 LT.	6+466.7 LT.			SLOPE	(T)	87 S.M.						936 SF±
			6+466.43 LT.				REMOVE & RESET	(T)							IRON PIN 7.54M(25') LT.
			6+026.0 LT.	6+030.1 LT.			DRIVE	(T)							GRAVEL
63	BESSETTE, SCOTT R. & ELIZABETH M.	55	3+545.8 RT.	3+556.5 RT.			SLOPE	(T)	18 S.M.			HIGHGATE			194 SF±
			3+546.6 RT.	3+556.5 RT.			CONST.	(T)	29 S.M.						312 SF±, INCLUDES SNOW FENCE
			3+560.0 RT.				DRIVE	(T)							7.0 M (23') GRAVEL
			3+560.4 RT.	3+651.5 RT.			UTILITY EASE.	(P)	300 S.M.						3,229 SF±
			3+563.5 RT.	3+598.2 RT.			SLOPE	(T)	42 S.M.						452 SF±
			3+563.5 RT.	3+652.4 RT.			CONST.	(T)	287 S.M.						3,089 SF± INCL. EROSION CONTROL & SNOW FENCE
			3+587.6 RT.	3+600.0 RT.			CUL., DR.	(P)							
			3+590.0 RT.	3+651.5 RT.			SLOPE	(P)	180 S. M.						1,937 SF±, INCL. TEMP. EROS. CONTROL
			3+623.9 RT.	3+634.0 RT.			CUL., DIT.	(P)							INCLUDES STONE FILL
	VERIZON NEW ENGLAND, INC.														UTILITY
	CITIZENS UTILITIES CO.														UTILITY
	MAINTENANCE AGREEMENT ZONE		1+003.5 CL	1+041.5 CL											LENGTH = 38.0M(125')

TABLE OF REVISIONS

REVISION NO.	SHEET NO.	DESCRIPTION	DATE

PLAN LEGEND

- EXISTING RIGHT-OF-WAY
- TAKING WITH ACCESS
- TAKING WITHOUT ACCESS
- CLEAR ZONE (CZ)
- PROPERTY LINE (P / L)
- TOE OF SLOPE
- TOP OF CUT
- SLOPE RIGHT (SR (P))
- CONSTRUCTION RIGHT (CONST. (T))

(P) -PERMANENT
(T) -TEMPORARY
DR. -DRAINAGE RIGHT
DIT. -DITCHING RIGHT
CH. -CHANNEL RIGHT
DRIVE -DRIVE RIGHT
CUL. -CULVERT RIGHT
C&T -CLEARING & TRIMMING RIGHT
SR -SLOPE RIGHT
UE -UTILITY EASEMENT

APPROVED: ROGER P. DUMAS DATE: 10-15-03
CHIEF, PLANS & TITLES

DATE PLOTTED: 04/11/2005

PROJECT NAME: HIGHGATE-FRANKLIN
PROJECT NUMBER: STP RS 0301(1) SA

FILE NAME: rc060d.xls
PROJECT LEADER: DELLASANTA
DESIGNED BY: SQUAD B
R.O.W. SHEET 47 OF 73

PLOT DATE: 10/15/03
DRAWN BY: GJF
CHECKED BY: EGP
SHEET 41 OF 450

CONSTRUCT DRIVE
STA 1+080.000 RT GRAVEL
STA 1+085.000 LT GRAVEL
STA 1+115.000 RT GRAVEL
STA 1+136.000 LT PAVED
STA 1+160.000 RT GRAVEL
STA 1+194.000 LT GRAVEL
STA 1+220.000 RT GRAVEL

CONSTRUCT SPECIAL DITCH
STA 1+050.000 TO STA 1+079.750 LT
STA 1+050.000 TO STA 1+074.520 RT
STA 1+085.750 TO STA 1+109.750 RT

RELOCATE MAIL BOX, SINGLE SUPPORT
STA 1+079.760 LT
STA 1+131.760 LT

EXCAVATION OF SURFACES AND PAVEMENTS
STA 1+000.000 TO STA 1+080.941LT

Metric

EXCAVATION OF SURFACES AND PAVEMENTS
APPLY 100mm TOPSOIL, AND SEED & MULCH

TO SWANTON

N/F
BELISLE, MICHAEL M.
& KELLIE

N/F
WYMAN, WINIFRED DUHAMEL
DUHAMEL, JAMES T.
DUHAMEL, JOHN A.

END MAINTENANCE AGREEMENT ZONE
STA. 1+041.5 CL.
LENGTH = 38.0M (124.7')

STA 1+040.000 TO STA 1+080.000 LT
EXISTING TO REMAIN UNDISTURBED

STA 1+040.000 TO STA 1+100.000 LT
NEW 200mm x 60M UNDERDRAIN
W/ FLUSHING BASIN AT STA 1+100.000 LT

STA 1+040.000 ℄
NEW 200mm x 73M UNDERDRAIN CARRIER PIPE
W/ FLUSHING BASIN AT STA 1+040.000 RT

ROW/ROW STA 0+996.34 73.77M LT.

SAW CUT EXISTING PAVEMENT

CURVE R=517.692 L=11.986

47.839

FARMLAND

PI 1+038.744 = 1+034.354

38.462

ROW/ROW STA 1+003.758 44.929M LT.

22.134

WETLAND A

SAW CUT TO MATCH EXISTING PAVEMENT
PAVE FULL DEPTH FROM SAW CUT TO STA 1+005.000
(PAVE FULL DEPTH IN SHOULDER AREA)
SEE DETAIL SHEET 237

BEGIN PROJECT - STP RS 030I(I) SA
TH#3 ℄ P.O.T. 1+003.156 = ROUTE 78 P.O.C. 9+677.347

STATE OF VERMONT

N26°28'20"E
6.896

BEGIN R.O.W. PROJECT
STP RS 030I(I) SA
BEGIN MAINTENANCE AGREEMENT ZONE
STA. 1+003.5 CL.

CURVE R=522.456 L=10.762

27.231

1+043.44
8.60M LT.
(28.2')

16.59M
(54.4')

1+039.47
7.50M RT.
(24.6')

CURVE #1
Δ 30° 43' 29" RT
R 105.000 M
L 56.306 M
T 28.848 M
E 3.891 M
B 0.020

PC STA 1+006.896

PT STA 1+062.202

STA 1+013 ℄
SCREW = 8T 29.41T RT
NEW 450mm x 22M CAAP 1.52mm. OR PCCSP 1.63mm. OR CPEP 1.63mm. OR CPEP
WITH DI AT INLET (L=1.8M, D=0.6M, I=0.675M)
STONE FILL TYPE II AT OUTLET (L=1.8M, D=0.6M)

VT RTE 78
TO SHELDON

STA 1+071.878 TO STA 1+086.700 RT
NEW 450mm x 15M CSP 1.63mm

STA 1+040.000 TO STA 1+100.000 RT
NEW 200mm x 60M UNDERDRAIN
W/ FLUSHING BASIN AT STA 1+100.000 RT

STA 1+147.539 TO STA 1+171.190 RT
NEW 450mm x 26M CSP 1.63mm

STA 1+193.930 TO STA 1+260.000 RT
NEW 450mm x 68M CSP 1.63mm

0 10 20 30
SCALE IN METERS

○ DENOTES TREE OR STUMP REMOVAL

(2)
DUHAMEL, JAMES T.
& HOLLY L.

CURVE R=75.423 L=13.928

BM #1
SIR 900 POP
US ELEV.
101.889M

11.966

CURVE R=174.544 L=15.908

17.193

½SWF HOUSE

5.4M

CURVE R=117.456 L=14.474

STA 1+168.800 PC

(1D)

BM #2
CHIS SQ IN LEDGE
US ELEV.
101.121M

DRIVE(T) 7.0M

28.568

INSTALL(T) 600mm(P)

CONST(T)

CUL. & DRAIN (P)

CURVE R=192.456 L=26.408

40.888

CURVE R=734.456 L=14.829

FARMLAND

ROW PT STA. 1+287.07 7.83 LT.

93.654

MATCHLINE

STA 1+256.784 PT

GUY

AERIAL

N44°28'10"E
108.847

SEE SHEET 88A OF 450

43 OF 450

(1A)

N57°11'58"E
103.599

121.96M (400.1')

121.30M (398.0')

1+100

1+200

1+162.48
7.50M RT.
(24.6')

12.0M

20.0M

METAL GAR.

METAL SHED

BARN

CURVE R=257.544 L=30.997

CURVE R=90.544 L=16.714

CURVE R=159.456 L=14.533

CURVE R=132.544 L=16.333

CURVE R=207.544 L=28.478

CURVE R=749.544 L=15.133

ROW P.T. STA 1+287.049 7.256M RT.

49.5M

LIGHT

CONC. BUNKER

BUNKER

(1E)

PI 1+211.978 = 1+211.607

(1A)

WYMAN, WINIFRED DUHAMEL
DUHAMEL, JAMES T.
DUHAMEL, JOHN A.
JOINED BY VERMONT LAND TRUST, INC. ET AL

(1B)
WYMAN, WINIFRED DUHAMEL
DUHAMEL, JAMES T.
DUHAMEL, JOHN A.
JOINED BY VERMONT LAND TRUST, INC. ET AL

CURVE #2
Δ 12° 43' 48" LT
R 405.000 M
L 89.983 M
T 45.178 M
E 2.512 M
B 0.047

VT STATE PLANE GRID

SEE LAYOUT SHEETS FOR CONSTRUCTION CHANGES

(R.O.W. AS BUILT)

LINES SHOWN ON THIS PLAN AS EXISTING PROPERTY LINES P/L ARE BELIEVED TO BE ACCURATE BUT SHOULD NOT BE RELIED UPON FOR PURPOSES UNRELATED TO THE STATE OF VERMONT'S ACQUISITION OF LAND AND RIGHTS FOR THIS PROJECT.

FOR R.O.W. USE ONLY

NOTES:
1. ALL SIDE ROAD RADII SHALL BE 11M UNLESS OTHERWISE NOTED. REFER TO STD B-12M
2. ALL DRIVE RADII SHALL BE 6M UNLESS OTHERWISE NOTED. REFER TO STD B-7IM

EXISTING R.O.W. CALCULATED POINT
N60°35'40"E 17.193 EXISTING R.O.W. DATA (TYPICAL)

PROJECT NAME: HIGHGATE-FRANKLIN ~~(AS BUILT)~~
PROJECT NUMBER: STP RS 030(I) SA

FILE NAME: ~~ASC060N~~ design/dc060bdr.dgn
PROJECT LEADER: DEL ASANTA
DESIGNED BY: SOLOMON B
~~DRAWN BY: SOLOMON B~~
~~CHECKED BY: HSOLOMON~~
~~FARM FILE NAME: dc060bdr~~
~~ROW LAYOUT SHEET 1A OF 26~~ 48 OF 73

PLOT DATE: 12-FEB-2014 11:46
DRAWN BY: SOLOMON B ROW
CHECKED BY: HSOLOMON
SHEET ~~42~~ 88A OF ~~450~~ 450

VAOT Metric

CONSTRUCT DRIVE
STA 1+344.000 LT GRAVEL
STA 1+414.000 RT GRAVEL
STA 1+428.000 RT GRAVEL
STA 1+484.000 LT GRAVEL
STA 1+498.000 RT GRAVEL
STA 1+564.000 LT GRAVEL

STEEL BEAM GUARDRAIL
STA 1+553.949 TO STA 1+627.842 RT
STA 1+617.592 TO STA 1+660.000 LT

STONE FILL, TYPE II
STA 1+555.892 TO STA 1+620.662 RT
STA 1+614.898 TO STA 1+650.000 LT

GRUBBING MATERIAL
STA 1+555.892 TO STA 1+620.662 RT
STA 1+614.898 TO STA 1+650.000 LT

RELOCATE MAIL BOX, SINGLE SUPPORT
STA 1+437.910 LT
STA 1+494.660 LT

EROSION MATTING (JUTE)
STA 1+555.892 TO STA 1+620.662 RT
STA 1+614.898 TO STA 1+650.000 LT

CONSTRUCT SPECIAL DITCH
STA 1+390.000 TO STA 1+406.000 RT
STA 1+480.000 TO STA 1+494.250 RT
STA 1+530.000 TO STA 1+559.500 LT
STA 1+569.000 TO STA 1+607.500 LT
STA 1+630.000 TO STA 1+660.000 RT

ANCHOR FOR STEEL BEAM RAIL
STA 1+553.949 RT
STA 1+617.592 LT
STA 1+627.842 RT

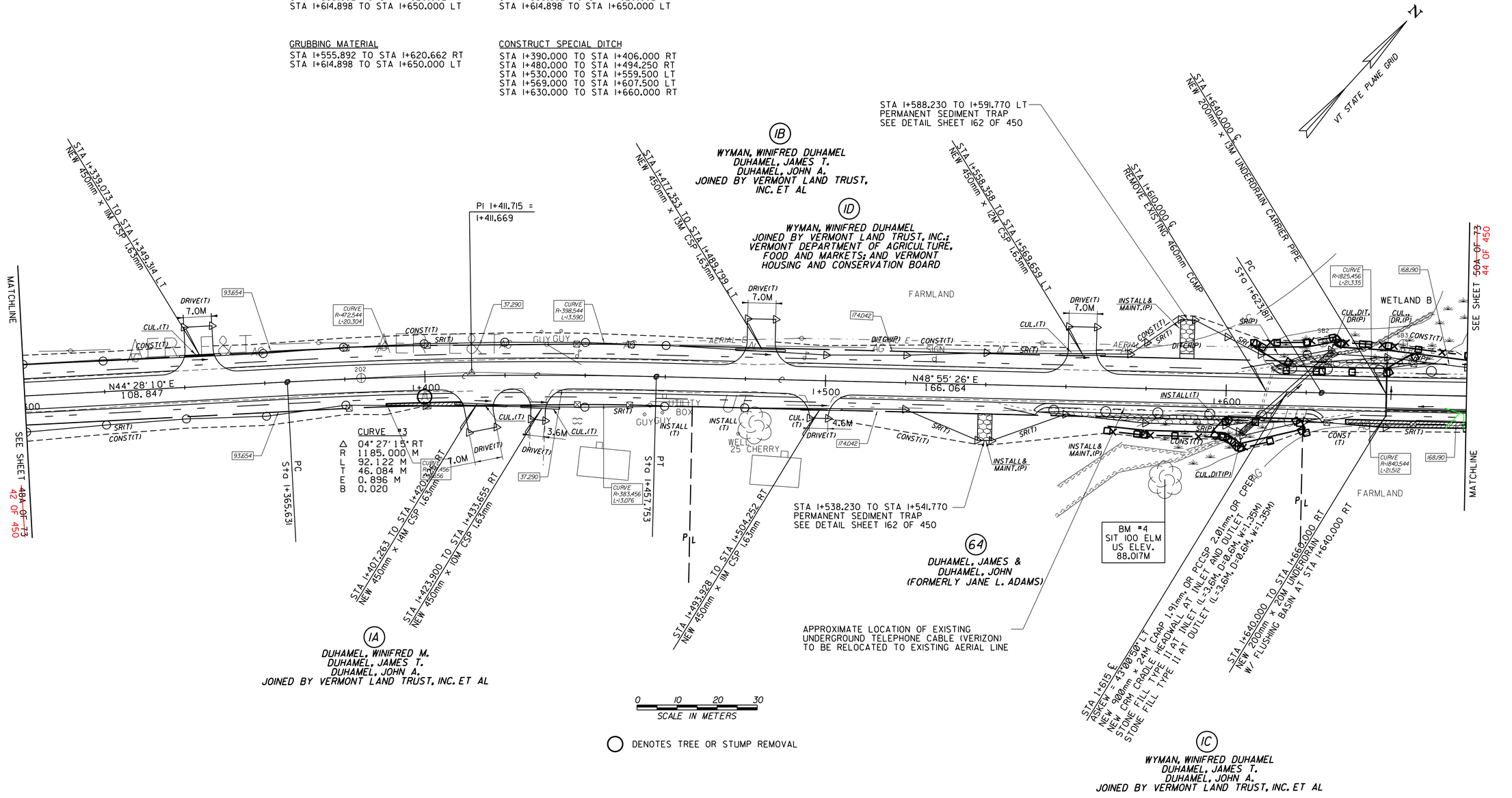

○ DENOTES TREE OR STUMP REMOVAL

NOTES:
1. ALL SIDE ROAD RADII SHALL BE 11M UNLESS OTHERWISE NOTED. REFER TO STD B-12M
2. ALL DRIVE RADII SHALL BE 6M UNLESS OTHERWISE NOTED. REFER TO STD B-7IM

EXISTING R.O.W. CALCULATED POINT
N68°35'49"E 17.193 EXISTING R.O.W. DATA (TYPICAL)

SEE LAYOUT SHEETS FOR CONSTRUCTION CHANGES

(R.O.W. AS BUILT)

LINES SHOWN ON THIS PLAN AS EXISTING PROPERTY LINES P/L ARE BELIEVED TO BE ACCURATE BUT SHOULD NOT BE RELIED UPON FOR PURPOSES UNRELATED TO THE STATE OF VERMONT'S ACQUISITION OF LAND AND RIGHTS FOR THIS PROJECT.

FOR R.O.W. USE ONLY

PROJECT NAME: HIGHGATE-FRANKLIN ~~(AS BUILT)~~
PROJECT NUMBER: STP RS 0301(I) SA

FILE NAME: NAME$DGN
PROJECT LEADER: DELLASANTA
DESIGNED BY: SQUAD B
ROW LAYOUT SHEET ~~2A OF 26~~ 49 OF 73

PLOT DATE: 12-FEB-2014 11:46
DRAWN BY: ~~N. GARBACIK~~ ROW
CHECKED BY: H. PETROVS
SHEET 43 ~~49A~~ OF ~~73~~ 450

VAOT Metric

STEEL BEAM GUARDRAIL
STA 1+660.000 TO STA 1+676.911 LT
STA 1+738.052 TO STA 1+823.478 LT
STA 1+849.622 TO STA 1+915.719 LT

STONE FILL, TYPE II
STA 1+739.236 TO STA 1+800.000 LT
STA 1+851.127 TO STA 1+890.000 LT

EROSION MATTING (JUTE)
STA 1+739.236 TO STA 1+800.000 LT
STA 1+851.127 TO STA 1+890.000 LT

RELOCATE MAIL BOX, SINGLE SUPPORT
STA 1+966.260 LT

REMOVING AND RESETTING FENCE
STA 1+928.000 TO STA 1+932.000 LT

CONSTRUCT DRIVE
STA 1+724.000 RT GRAVEL
STA 1+834.000 RT GRAVEL
STA 1+834.000 LT GRAVEL
STA 1+920.000 LT GRAVEL
STA 1+973.000 LT GRAVEL
STA 1+973.000 RT GRAVEL

GRUBBING MATERIAL
STA 1+739.236 TO STA 1+800.000 LT
STA 1+851.127 TO STA 1+890.000 LT

ANCHOR FOR STEEL BEAM RAIL
STA 1+676.911 LT
STA 1+738.052 LT
STA 1+823.478 LT
STA 1+849.622 LT
STA 1+915.719 LT

CONSTRUCT SPECIAL DITCH
STA 1+660.000 TO STA 1+721.250 RT
STA 1+790.000 TO STA 1+831.500 RT
STA 1+836.500 TO STA 1+850.000 RT
STA 1+890.000 TO STA 1+915.500 LT
STA 1+890.000 TO STA 1+971.500 RT
STA 1+926.500 TO STA 1+971.500 LT
STA 1+975.500 TO STA 1+990.000 RT
STA 1+976.250 TO STA 2+010.000 LT

VT STATE PLANE GRID

(1B) WYMAN, WINIFRED DUHAMEL
DUHAMEL, JAMES T.
DUHAMEL, JOHN A.
JOINED BY VERMONT LAND TRUST, INC. ET AL

(1D) WYMAN, WINIFRED DUHAMEL
JOINED BY VERMONT LAND TRUST, INC.;
VERMONT DEPARTMENT OF AGRICULTURE, FOOD AND MARKETS; AND VERMONT HOUSING AND CONSERVATION BOARD

(4) JOHNSTON, RONALD A.
& SHELLY A.

(1C) WYMAN, WINIFRED DUHAMEL
DUHAMEL, JAMES T.
DUHAMEL, JOHN A.
JOINED BY VERMONT LAND TRUST, INC. ET AL

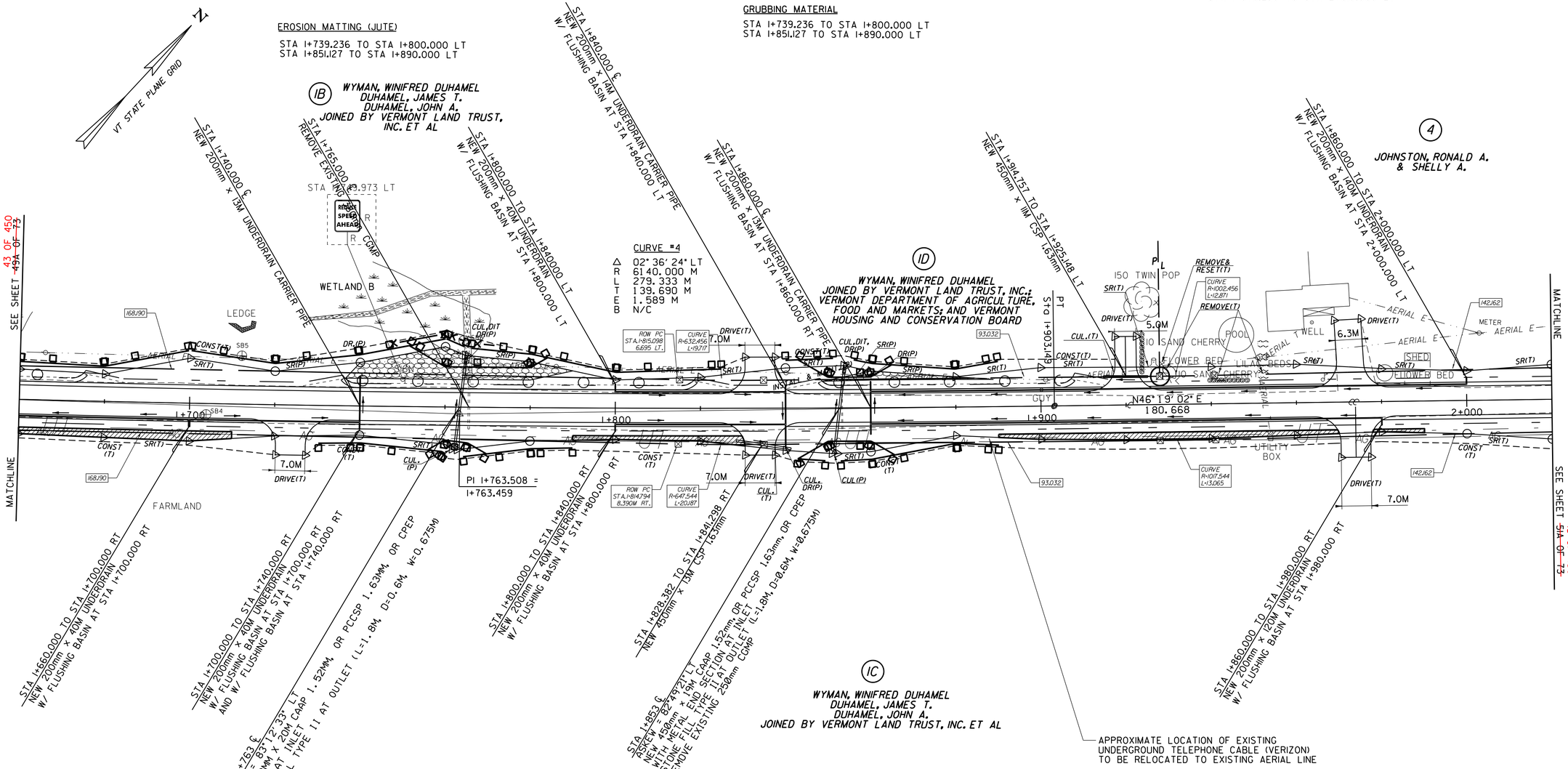

0 10 20 30
SCALE IN METERS

◯ DENOTES TREE OR STUMP REMOVAL

NOTES:
1. ALL SIDE ROAD RADII SHALL BE 11M UNLESS OTHERWISE NOTED. REFER TO STD B-12M
2. ALL DRIVE RADII SHALL BE 6M UNLESS OTHERWISE NOTED. REFER TO STD B-7IM

EXISTING R.O.W. CALCULATED POINT
N60°35'48"E 17.193 EXISTING R.O.W. DATA (TYPICAL)

SEE LAYOUT SHEETS FOR CONSTRUCTION CHANGES

(R.O.W. AS BUILT)

LINES SHOWN ON THIS PLAN AS EXISTING PROPERTY LINES P/L ARE BELIEVED TO BE ACCURATE BUT SHOULD NOT BE RELIED UPON FOR PURPOSES UNRELATED TO THE STATE OF VERMONT'S ACQUISITION OF LAND AND RIGHTS FOR THIS PROJECT.

FOR R.O.W. USE ONLY

PROJECT NAME: HIGHGATE-FRANKLIN ~~(AS BUILT)~~
PROJECT NUMBER: STP RS 0301(1) SA

FILE NAME: NAME$DGN
PROJECT LEADER: DELLASANTA
DESIGNED BY: SQUAD B
ROW LAYOUT SHEET ~~3A OF 26~~ 50 OF 73

PLOT DATE: 12-FEB-2014 11:47
DRAWN BY: ~~N. GARBACIK~~ ROW
CHECKED BY: H. PETROVS
SHEET 44 ~~50A~~ OF ~~73~~ 450

VT STATE PLANE GRID

CONSTRUCT DRIVE
STA 2+340.000 RT GRAVEL
STA 2+378.000 LT GRAVEL

MANUFACTURED TERMINAL SECTION (TANGENTIAL)
STA 2+178.587 TO STA 2+193.827 LT
STA 2+228.119 TO STA 2+243.358 LT
STA 2+193.881 TO STA 2+209.121 RT
STA 2+220.551 TO STA 2+235.791 RT

STONE FILL, TYPE II
STA 2+170.000 TO STA 2+245.000 LT
STA 2+193.903 TO STA 2+235.810 RT

RELOCATE MAIL BOX, SINGLE SUPPORT
STA 2+379.470 LT

GRUBBING MATERIAL
STA 2+170.000 TO STA 2+245.000 LT
STA 2+193.903 TO STA 2+235.810 RT

EROSION MATTING (JUTE)
STA 2+170.000 TO STA 2+245.000 LT
STA 2+193.903 TO STA 2+235.810 RT

STEEL BEAM GUARDRAIL
STA 2+193.827 TO STA 2+228.119 LT
STA 2+209.121 TO STA 2+220.551 RT

SNOW FENCE
STA 2+060.000 TO STA 2+120.000 RT

REMOVING AND RESETTING FENCE
STA 2+222.000 LT - 2.5M BACK

CONSTRUCT SPECIAL DITCH
STA 2+070.000 TO STA 2+150.000 RT
STA 2+280.000 TO STA 2+375.000 LT
STA 2+280.750 TO STA 2+380.000 RT

Metric

(4)
JOHNSTON, RONALD A.
& SHELLY A.

AERIAL RELOCATION ROUTE

CURVE #5
Δ 12° 27' 37" RT
R 402.000 M
L 87.425 M
T 43.886 M
E 2.388 M
B 4.700%

PI 2+127.704 =
2+127.357

4.5M(14.8 FEET) FROM POLE LINE

CLASS II WETLAND C
STEELE BROOK

15 m BUFFER

REMOVE & RESET (L)

STA 2+240.000 LT TO STA 2+250.000 LT
NEW 200mm x 12M UNDERDRAIN CARRIER PIPE

STA 2+250.000 TO STA 2+340.000 LT
NEW 200mm x 90M UNDERDRAIN
W/ FLUSHING BASIN AT STA 2+260.000 LT
W/ FLUSHING BASIN AT STA 2+340.000 LT

(5)
LOCKE, KATHY A.

FARMLAND

METER

SEE SHEET 52A OF 73
46 OF 450

SEE SHEET 50A OF 73
44 OF 450

MATCHLINE

N46° 19' 02" E
180.668

N58° 46' 39" E
179.966

STA 2+080.000 RT
NEW 200mm x 90M UNDERDRAIN
W/ FLUSHING BASIN AT STA 2+080.000 RT

PC Sta 2+083.818

KEEP OUT
DO NOT DISTURB

STA 2+138.200 TO STA 2+141.800 RT
PERMANENT SEDIMENT TRAP
SEE DETAIL SHEET 162 OF 450

(IF)
WYMAN, WINIFRED DUHAMEL
JOINED BY VERMONT LAND TRUST, INC.;
VERMONT DEPARTMENT OF AGRICULTURE,
FOOD AND MARKETS; AND VERMONT
HOUSING AND CONSERVATION BOARD

(IC)
WYMAN, WINIFRED DUHAMEL
DUHAMEL, JAMES T.
DUHAMEL, JOHN A.
JOINED BY VERMONT LAND TRUST,
INC. ET AL

PT Sta 2+171.243

STA 2+180.000 RT
NEW 200mm x 6M UNDERDRAIN CARRIER PIPE
W/ FLUSHING BASIN AT STA 2+180.000 RT

STA 2+217.250 &
NEW 1800 x 1830 PCCSP
SEE BRIDGE DETAILS SHEET 226 OF 450

STA 2+238.230 TO STA 2+241.770 RT
PERMANENT SEDIMENT TRAP
SEE DETAIL SHEET 162 OF 450

STA 2+300.000 RT
NEW 200mm x 80M UNDERDRAIN
W/ FLUSHING BASIN AT STA 2+300.000 RT

STA 2+380.000 RT
NEW 200mm x 80M UNDERDRAIN
W/ FLUSHING BASIN AT STA 2+380.000 RT

APPROXIMATE LOCATION OF EXISTING
UNDERGROUND TELEPHONE CABLE (VERIZON)
TO BE RELOCATED AERIALLY

PC Sta 2+351.209

MATCHLINE

0 10 20 30
SCALE IN METERS

◯ DENOTES TREE OR STUMP REMOVAL

NOTES:
1. ALL SIDE ROAD RADII SHALL BE 11M UNLESS OTHERWISE NOTED. REFER TO STD B-12M
2. ALL DRIVE RADII SHALL BE 6M UNLESS OTHERWISE NOTED. REFER TO STD B-71M

EXISTING R.O.W. CALCULATED POINT
N68°35'48"E 17.193 EXISTING R.O.W. DATA (TYPICAL)

SEE LAYOUT SHEETS FOR CONSTRUCTION CHANGES

(R.O.W. AS BUILT)

LINES SHOWN ON THIS PLAN AS EXISTING PROPERTY LINES P/L ARE BELIEVED TO BE ACCURATE BUT SHOULD NOT BE RELIED UPON FOR PURPOSES UNRELATED TO THE STATE OF VERMONT'S ACQUISITION OF LAND AND RIGHTS FOR THIS PROJECT.

FOR R.O.W. USE ONLY

PROJECT NAME: HIGHGATE-FRANKLIN ~~(AS BUILT)~~
PROJECT NUMBER: STP RS 0301(I) SA

FILE NAME: NAME$DGN
PROJECT LEADER: DELLASANTA
DESIGNED BY: SQUAD B
ROW LAYOUT SHEET ~~4A OF 26~~ 51 OF 73

PLOT DATE: 12-FEB-2014 11:47
DRAWN BY: ~~N. GARBACIK~~ ROW
CHECKED BY: H. PETROVS
SHEET 45 ~~51A~~ OF ~~73~~ 450

STEEL BEAM GUARDRAIL
STA 2+434.922 TO STA 2+503.821RT
STA 2+472.326 TO STA 2+532.701LT
STA 2+633.813 TO STA 2+637.623 LT
STA 2+633.813 TO STA 2+637.623 RT

STONE FILL, TYPE II
STA 2+438.643 TO STA 2+498.810 RT
STA 2+476.000 TO STA 2+529.029 LT
STA 2+618.257 TO STA 2+653.180 LT
STA 2+618.257 TO STA 2+653.180 RT

CONSTRUCT DRIVE
STA 2+506.000 RT GRAVEL
STA 2+562.000 RT GRAVEL
STA 2+590.000 LT GRAVEL

MANUFACTURED TERMINAL SECTION (TANGENTIAL)
STA 2+618.247 TO STA 2+633.813 LT
STA 2+637.623 TO STA 2+653.189 LT
STA 2+618.247 TO STA 2+633.813 RT
STA 2+637.623 TO STA 2+653.189 RT

RELOCATE MAIL BOX, SINGLE SUPPORT
STA 2+558.830 LT

GRUBBING MATERIAL
STA 2+438.643 TO STA 2+498.810 RT
STA 2+476.000 TO STA 2+529.029 LT
STA 2+618.257 TO STA 2+653.180 LT
STA 2+618.257 TO STA 2+653.180 RT

EROSION MATTING (JUTE)
STA 2+438.643 TO STA 2+498.810 RT
STA 2+476.000 TO STA 2+529.029 LT
STA 2+618.257 TO STA 2+653.180 LT
STA 2+618.257 TO STA 2+653.180 RT

CONSTRUCT SPECIAL DITCH
STA 2+380.000 TO STA 2+410.000 RT
STA 2+536.000 TO STA 2+558.000 RT
STA 2+550.000 TO STA 2+588.500 LT
STA 2+565.000 TO STA 2+580.000 RT
STA 2+710.000 TO STA 2+730.000 LT

ANCHOR FOR STEEL BEAM RAIL
STA 2+434.922 RT
STA 2+472.326 LT
STA 2+503.821RT
STA 2+532.701LT

SLEEVES FOR UTILITIES (115 mm DIAMETER)(MOD)
STA 2+700.000 TO STA 2+740.000 LT

VAOT Metric

N
VT STATE PLANE GRID

AERIAL RELOCATION ROUTE

STA 2+538.230 TO STA 2+541.770 LT
PERMANENT SEDIMENT TRAP
SEE DETAIL SHEET 162 OF 450

PI 2+394.809 =
2+394.426

STA 2+380.000 TO STA 2+420.000 RT
NEW 200mm x 40M UNDERDRAIN

5
LOCKE, KATHY A.
15 m BUFFER
CLASS II WETLAND D
FARMLAND
CURVE R=427.544 L=102.898
5A
IC
IF
6A
WYMAN, WINIFRED DUHAMEL
DUHAMEL, JAMES T.
DUHAMEL, JOHN A.
JOINED BY VERMONT
LAND TRUST, INC. ET AL
CURVE R=412.456 L=99.267

STA 2+420.000 RT
NEW 200mm x 6M UNDERDRAIN CARRIER PIPE
W/ FLUSHING BASIN

CURVE #6
Δ 13°09'54" RT
R 378.000 M
L 86.817 M
T 43.600 M
E 2.506 M
B 4.900%

BESSETTE, DONALD P.
& FRANCES M.
BESSETTE, SCOTT R.
BESSETTE, MARC D.
JOINED BY VERMONT
LAND TRUST, INC. ET AL

IP RESET LS #45
2+451.075, 6.965 RT

STA 2+483.000 ℄
NEW 1850 x 1850 x 19300 PRECAST CONCRETE BOX
SEE BRIDGE DETAILS SHEET 227 OF 450

STA 2+496.278 TO STA 2+512.020 RT
NEW 450mm x 16M CSP 1.63mm

7
COUTTS, DARYL M.
& LISE A.
WELL
HOUSE
LEACH AREA

STA 2+540.000 ℄
NEW 200mm x 15M UNDERDRAIN CARRIER PIPE
W/ FLUSHING BASIN AT STA 2+540.000 RT

CURVE #7
Δ 01°50'12" LT
R 1000.000 M
L 32.056 M
T 16.030 M
E 0.128 M
B 2.200%

TREE PROTECTION ZONE
SEE LANDSCAPING PLANS

APPROXIMATE LOCATION OF EXISTING
UNDERGROUND TELEPHONE CABLE (VERIZON)
TO BE RELOCATED AERIALLY AND UNERGROUND AS SHOWN

BM #6
SIR 600 MAPLE
US ELEV.
264.420M

9A
DUPUIS, JACQUES A.
& SUZANNE G.

STA 2+540.000 TO STA 2+580.000 LT
NEW 200mm x 40M UNDERDRAIN
W/ FLUSHING BASIN AT STA 2+580.000 LT

STA 2+581.989
PC 2+569.533
PT 2+593.533

600 MPL BM#6
REMOVE(T) 25 PINE
30 BIRCH
FLOWER BED
PLANTING BED
UTILITY BOX
AREA DRAIN
WELL
LEACH AREA
I½ STORY
CURVE R=557.544 L=17.649
PI 2+565.963 =
2+565.959

STA 2+540.000 TO STA 2+580.000 RT
NEW 200mm x 40M UNDERDRAIN
W/ FLUSHING BASIN AT STA 2+580.000 RT

8
LAUGHLIN, MICHAEL D.
& FLORENCE H.

STA 2+636 ℄
NEW 750mm x 19M CAAP 1.91mm OR PCCSP 2.01mm OR CPEP
NEW CRM CRADLE HEADWALL AT INLET AND OUTLET
STONE FILL TYPE II AT INLET (L=3.0M, D=0.6M, w=1.125M)
STONE FILL TYPE II AT OUTLET (L=3.0M, D=0.6M, w=1.125M)
REMOVE EXISTING 460mm CMP

END AERIAL RELOCATION
BEGIN UNDERGROUND
RELOCATION ROUTE
BY VERIZON

6C
BESSETTE, DONALD P.
& FRANCES M.
BESSETTE, SCOTT R.
BESSETTE, MARC D.
JOINED BY VERMONT
LAND TRUST, INC. ET AL

STA 2+658.230 TO STA 2+661.770 LT
PERMANENT SEDIMENT TRAP
SEE DETAIL SHEET 162 OF 450

IP RESET LS #45
2+657.566, 7.544 LT

66A
BESSETTE, DONALD P.
& FRANCES M., LESSOR
LONGVIEW FARMS, LLC, LESSEE

STA 2+680.000 TO STA 2+740.000 LT
NEW 200mm x 4M UNDERDRAIN CARRIER PIPE
W/ FLUSHING BASIN AT STA 2+680.000 LT

CURVE #8
Δ 18°04'38" LT
R 418.000 M
L 131.882 M
T 66.494 M
E 5.256 M
B 4.500%

REVISED PROPOSED UNDERGROUND
SLEEVE FOR UTILITIES
INSTALL WITHIN R.O.W.
SEE DETAIL SHEET 68 OF 450

ROW PC STA 2+689.767 7.413M LT.
CURVE R=372.456 L=115.557
ROW PC STA 2+689.656 7.674M RT.
CURVE R=387.544 L=120.238

STA 2+658.230 TO STA 2+661.770 RT
PERMANENT SEDIMENT TRAP
SEE DETAIL SHEET 162 OF 450

EXISTING 250mm SLEEVE
TO BE REMOVED AND REPLACED
WITH A NEW 250mm SLEEVE AND A NEW 150mm PIPE

66B
BESSETTE, DONALD P.
& FRANCES M., LESSOR
LONGVIEW FARMS, LLC, LESSEE

6B
BESSETTE, DONALD P.
& FRANCES M.
BESSETTE, SCOTT R.
BESSETTE, MARC D.
JOINED BY VERMONT
LAND TRUST, INC. ET AL

EXTEND EXISTING FIELD
DRAIN AS NEEDED WITH
SLEEVE FOR UTILITIES (MOD)
SEE DETAIL SHEET 68 OF 450

STA 2+680.000 TO STA 2+740.000 LT
NEW 200mm x 60M UNDERDRAIN
W/ FLUSHING BASIN AT STA 2+740.000 LT

N71°56'12"E 111.907
N70°06'02"E 106.346

SPRUCE
CUL.DIT.(P)
INSTALL&MAINT(P)
REMOVE & RESET(T)
INSTALL(T)
REMOVE(T)
DO NOT DISTURB
LIGHT
METER
SHRUBS
CEDAR TREES

MATCHLINE
SEE SHEET 45 OF 450 5A OF 73
SEE SHEET 47 OF 450 53A OF 73

0 10 20 30
SCALE IN METERS

○ DENOTES TREE OR STUMP REMOVAL

NOTES:
1. ALL SIDE ROAD RADII SHALL BE 11M UNLESS OTHERWISE NOTED. REFER TO STD B-12M
2. ALL DRIVE RADII SHALL BE 6M UNLESS OTHERWISE NOTED. REFER TO STD B-7IM

EXISTING R.O.W. CALCULATED POINT
N60°35'40"E 17.193 EXISTING R.O.W. DATA (TYPICAL)

SEE LAYOUT SHEETS FOR CONSTRUCTION CHANGES

(R.O.W. AS BUILT)

LINES SHOWN ON THIS PLAN AS EXISTING PROPERTY LINES P/L ARE BELIEVED TO BE ACCURATE BUT SHOULD NOT BE RELIED UPON FOR PURPOSES UNRELATED TO THE STATE OF VERMONT'S ACQUISITION OF LAND AND RIGHTS FOR THIS PROJECT.

FOR R.O.W. USE ONLY

PROJECT NAME: HIGHGATE-FRANKLIN ~~(AS BUILT)~~
PROJECT NUMBER: STP RS 0301(I) SA

FILE NAME: NAME$DGN
PROJECT LEADER: DELLASANTA
DESIGNED BY: SQUAD B
ROW LAYOUT SHEET ~~5A OF 26~~ 52 OF 73

PLOT DATE: 12-FEB-2014 11:47
DRAWN BY: ~~N. GARDACIK~~ ROW
CHECKED BY: H. PETROVS
SHEET ~~46~~ ~~52A~~ OF ~~73~~ 450

VAOT Metric

N

VT STATE PLANE GRID

STEEL BEAM GUARDRAIL
STA 2+831.421 TO STA 2+854.221 LT
STA 2+831.421 TO STA 2+854.221 RT

GRUBBING MATERIAL
STA 2+816.217 TO STA 2+869.494 LT
STA 2+816.217 TO STA 2+869.494 RT

REMOVING AND RESETTING FENCE
STA 2+981.280 TO STA 3+008.210 RT
STA 2+981.280 RT - 2M BACK
STA 3+008.210 RT - 4.5M BACK
STA 3+099.000 TO STA 3+100.000 LT
STA 3+099.000 LT - 4M BACK

SLEEVES FOR UTILITIES (115 mm DIAMETER)(MOD)
STA 2+740.000 TO STA 2+830.000 LT

MANUFACTURED TERMINAL SECTION (TANGENTIAL)
STA 2+816.222 TO STA 2+831.421 RT
STA 2+854.221 TO STA 2+869.461 RT
STA 2+816.222 TO STA 2+831.421 LT
STA 2+854.221 TO STA 2+869.461 LT

STONE FILL, TYPE II
STA 2+816.217 TO STA 2+869.494 LT
STA 2+816.217 TO STA 2+869.494 RT

CONSTRUCT DRIVE
STA 2+983.000 LT GRAVEL
STA 3+037.000 RT GRAVEL
STA 3+068.000 LT GRAVEL

EROSION MATTING (JUTE)
STA 2+816.217 TO STA 2+869.494 LT
STA 2+816.217 TO STA 2+869.494 RT

RELOCATE MAIL BOX, SINGLE SUPPORT
STA 3+042.750 LT
STA 3+077.850 LT

CONSTRUCT SPECIAL DITCH
STA 2+890.000 TO STA 2+910.000 RT
STA 2+950.000 TO STA 2+979.500 LT
STA 2+950.000 TO STA 3+030.500 RT
STA 2+986.500 TO STA 3+030.000 LT
STA 3+045.000 TO STA 3+090.000 RT

STA 3+098.230 TO STA 3+100.000 LT
PERMANENT SEDIMENT TRAP
SEE DETAIL SHEET 162 OF 450

EXISTING WATER LINE TO
REMAIN UNDISTURBED

CURVE #8
Δ 18° 04' 38" LT
R 418.000 M
L 131.882 M
T 66.494 M
E 5.256 M
B 4.500%

CURVE #9
Δ 09° 37' 57" RT
R 571.000 M
L 95.996 M
T 48.111 M
E 2.023 M
B 3.700%

APPROXIMATE LOCATION
EXISTING STAND PIPES

END UNDERGROUND
RELOCATION ROUTE
BY VERIZON

FARMLAND

BESSETTE, DONALD P.
& FRANCES M.
BESSETTE, SCOTT R.
BESSETTE, MARC D.
JOINED BY VERMONT
LAND TRUST, INC. ET AL
6C

EXISTING UNDERDRAIN
TO REMAIN AND
DRAIN INTO DITCH

BM

1½SWF
HOUSE

600 MPL

50 MPL

25 MPL

REVISED PROPOSED UNDERGROUND
SLEEVE FOR UTILITIES
INSTALL WITHIN R.O.W.
SEE DETAIL SHEET 68 OF 450

AERIAL RELOCATION ROUTE

SEE SHEET 52A OF 73
46 OF 450

SEE SHEET 54A OF 73
48 OF 450

Sta 2+820.217 PT

STA 2+860.000 LT
NEW 200mm x 5M UNDERDRAIN CARRIER PIPE
W/ FLUSHING BASIN AT STA 2+860.000 LT

STA 2+860.000 TO STA 2+960.000 LT
NEW 200mm x 100M UNDERDRAIN
W/ FLUSHING BASIN AT STA 2+960.000 LT

STA 2+960.000 TO STA 3+060.000 LT
NEW 200mm x 100M UNDERDRAIN

STA 3+060.000 ℄
NEW 200mm x 8M UNDERDRAIN CARRIER PIPE
W/ FLUSHING BASIN AT STA 3+060.000 LT

STA 3+062.143 TO STA 3+074.791 LT
REMOVE EXISTING 380mm CGMP AND 205mm PLASTIC
NEW 450mm x 15M CSP 1.63mm

CURVE R-372.456 L-115.557
CURVE R-387.544 L-120.238
CURVE R-147.456 L-13.823
CURVE R-1162.544 L-14.005
CURVE R-427.544 L-72.472
CURVE R-412.456 L-69.914

PI 2+754.829 =
2+753.841

PI 3+098.634 =
3+098.408

N52° 01' 24" E
230.306

2+800
2+900
3+000

UTILITY BOX

POST GUY

DEC TREE

WELL

I SWF HOUSE

I SWF BLDG "SHOP"

9B DUPUIS, JACQUES A. & SUZANNE G.

10A

10 DUPUIS, JACQUES A. & SUZANNE G. DUPUIS, LUC & JEANNINE

STA 3+020.000 RT
FLUSHING BASIN

STA 3+033.447 TO STA 3+045.965 RT
REMOVE EXISTING DRIVE PIPE
NEW 450mm x 17M CSP 1.63mm

STA 3+031.285 TO STA 3+048.064 RT
NEW 450mm x 17M CSP 1.63mm

STA 3+050.823

IP RESET L.S. #451
2+981.982, 1.018 RT

MATCHLINE

STA 2+847.6
ASKEW = 82°04'47" LT
NEW 750mm x 18M CAAP 1.91mm OR PCCSP 2.01mm OR CPEP
NEW CRM CRADLE HEADWALL AT INLET AND OUTLET
STONE FILL TYPE II AT INLET (L=3.0M, D=0.6M, w=1.125M)
STONE FILL TYPE II AT OUTLET (L=3.0M, D=0.6M, w=1.125M)
REMOVE EXISTING 380mm CMP

STA 2+860.000 RT
NEW 200mm x 5M UNDERDRAIN CARRIER PIPE
W/ FLUSHING BASIN AT STA 2+860.000 RT

6B BESSETTE, DONALD P.
& FRANCES M.
BESSETTE, SCOTT R.
BESSETTE, MARC D.
JOINED BY VERMONT
LAND TRUST, INC. ET AL

EXISTING 250mm SLEEVE
TO BE REMOVED AND REPLACED
WITH A NEW 250mm SLEEVE AND A NEW 150mm PIPE

APPROXIMATE LOCATION OF EXISTING
UNDERGROUND TELEPHONE CABLE (VERIZON)
TO BE RELOCATED AERIALLY AND UNDERGROUND AS SHOWN

0 10 20 30
SCALE IN METERS

DENOTES TREE OR STUMP REMOVAL

NOTES:
1. ALL SIDE ROAD RADII SHALL BE 11M UNLESS OTHERWISE NOTED. REFER TO STD B-12M
2. ALL DRIVE RADII SHALL BE 6M UNLESS OTHERWISE NOTED. REFER TO STD B-7IM

EXISTING R.O.W. CALCULATED POINT
N60°35'40"E 17.193 EXISTING R.O.W. DATA (TYPICAL)

SEE LAYOUT SHEETS FOR
CONSTRUCTION CHANGES

(R.O.W. AS BUILT)

LINES SHOWN ON THIS PLAN AS EXISTING PROPERTY LINES P/L ARE BELIEVED TO BE ACCURATE BUT SHOULD NOT BE RELIED UPON FOR PURPOSES UNRELATED TO THE STATE OF VERMONT'S ACQUISITION OF LAND AND RIGHTS FOR THIS PROJECT.

FOR R.O.W. USE ONLY

PROJECT NAME: HIGHGATE-FRANKLIN ~~(AS BUILT)~~
PROJECT NUMBER: STP RS 0301(I) SA

FILE NAME: NAME$DGN
PROJECT LEADER: DELLASANTA
DESIGNED BY: SQUAD B
ROW LAYOUT SHEET ~~6A OF 26~~ 53 OF 73

PLOT DATE: 12-FEB-2014 11:47
DRAWN BY: ~~N. GARBACIK~~ ROW
CHECKED BY: H. PETROVS
SHEET 47~~53A~~ OF ~~73~~ 450

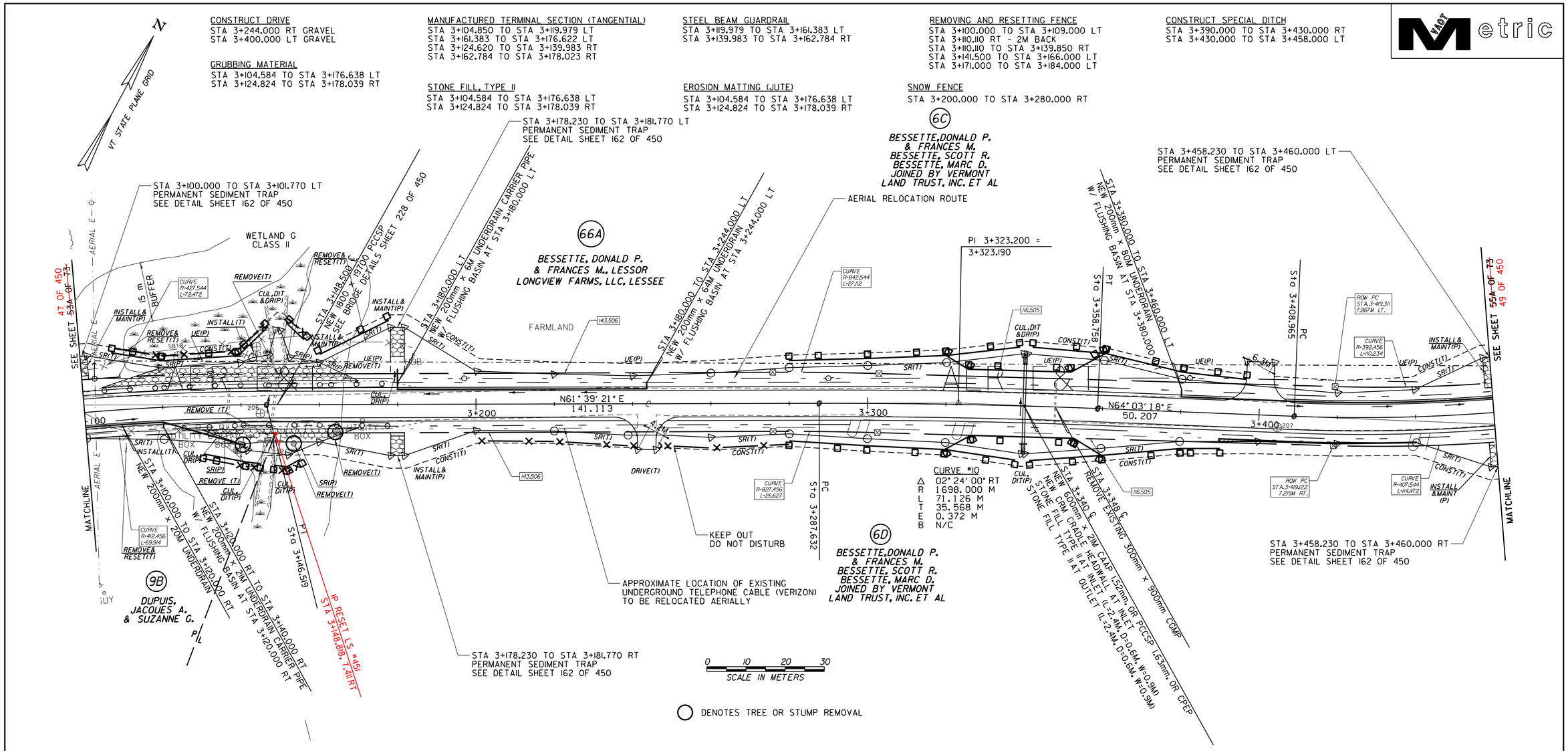

NOTES;

1. ALL SIDE ROAD RADII SHALL BE 11M UNLESS OTHERWISE NOTED. REFER TO STD B-12M
2. ALL DRIVE RADII SHALL BE 6M UNLESS OTHERWISE NOTED. REFER TO STD B-7IM

LINES SHOWN ON THIS PLAN AS EXISTING PROPERTY LINES P/L ARE BELIEVED TO BE ACCURATE BUT SHOULD NOT BE RELIED UPON FOR PURPOSES UNRELATED TO THE STATE OF VERMONT'S ACQUISITION OF LAND AND RIGHTS FOR THIS PROJECT.

FOR R.O.W. USE ONLY

SEE LAYOUT SHEETS FOR CONSTRUCTION CHANGES

(R.O.W. AS BUILT)

PROJECT NAME: HIGHGATE-FRANKLIN ~~(AS BUILT)~~
PROJECT NUMBER: STP RS 0301(I) SA

FILE NAME: NAME$DGN
PROJECT LEADER: DELLASANTA
DESIGNED BY: SQUAD B
ROW LAYOUT SHEET ~~7A OF 26~~ 54 OF 73

PLOT DATE: 12-FEB-2014 11:47
DRAWN BY: ~~N. GARBACIK~~ ROW
CHECKED BY: H. PETROVS
SHEET 48 ~~54A~~ OF ~~73~~ 450

CONSTRUCT DRIVE
STA 3+540.000 RT GRAVEL
STA 3+549.000 LT GRAVEL
STA 3+560.000 RT GRAVEL

STEEL BEAM GUARDRAIL
STA 3+612.857 TO STA 3+647.057 LT
STA 3+615.198 TO STA 3+683.597 RT

MANUFACTURED TERMINAL SECTION (TANGENTIAL)
STA 3+597.617 TO STA 3+612.857 LT
STA 3+647.057 TO STA 3+662.297 LT
STA 3+600.000 TO STA 3+615.198 RT
STA 3+683.597 TO STA 3+698.838 RT

RELOCATE MAIL BOX, SINGLE SUPPORT
STA 3+544.880 LT

REMOVING AND RESETTING FENCE
STA 3+465.150 LT - 4.5M BACK
STA 3+465.150 TO STA 3+505.630 LT
STA 3+505.630 LT - 6M BACK
STA 3+566.880 TO STA 3+631.920 LT
STA 3+566.880 LT - 4M BACK
STA 3+631.920 LT - 8M BACK

SNOW FENCE
STA 3+520.000 TO STA 3+580.000 RT

STONE FILL, TYPE II
STA 3+597.659 TO STA 3+662.340 LT
STA 3+600.000 TO STA 3+698.880 RT

EROSION MATTING (JUTE)
STA 3+597.659 TO STA 3+662.340 LT
STA 3+600.000 TO STA 3+698.880 RT

GRUBBING MATERIAL
STA 3+597.659 TO STA 3+662.340 LT
STA 3+600.000 TO STA 3+698.880 RT

CONSTRUCT SPECIAL DITCH
STA 3+530.000 TO STA 3+546.000 LT
STA 3+543.000 TO STA 3+570.000 RT

VT STATE PLANE GRID

STA 3+460.000 TO STA 3+461.770 LT
PERMANENT SEDIMENT TRAP
SEE DETAIL SHEET 162 OF 450

6C
BESSETTE, DONALD P. & FRANCES M. BESSETTE, SCOTT R. BESSETTE, MARC D. JOINED BY VERMONT LAND TRUST, INC. ET AL

11
DUPUIS, LUC & JEANNINE

6D
BESSETTE, DONALD P. & FRANCES M. BESSETTE, SCOTT R. BESSETTE, MARC D. JOINED BY VERMONT LAND TRUST, INC. ET AL

66C
BESSETTE, DONALD P. & FRANCES M. JOINED BY VERMONT LAND TRUST, INC. ET AL

66D
BESSETTE, DONALD P. & FRANCES M. JOINED BY VERMONT LAND TRUST, INC. ET AL

6E
BESSETTE, DONALD P. & FRANCES M. BESSETTE, SCOTT R. BESSETTE, MARC D. JOINED BY VERMONT LAND TRUST, INC. ET AL

63
BESSETTE, SCOTT R. & ELIZABETH M.

67
FARMLAND

12A
FORMERLY BESSETTE, DONALD P. & FRANCES M. BESSETTE, BRIAN H.

SEE SHEET 48 OF 450 54A OF 73

SEE SHEET 56A OF 73 50 OF 450

MATCHLINE

STA 3+460.000 TO STA 3+480.000 LT NEW 200mm x 20M UNDERDRAIN

STA 3+480.000 LT NEW 200mm x 6M UNDERDRAIN CARRIER PIPE

STA 3+498.6 ℄ REMOVE EXISTING 600mm ACCGMP

STA 3+540.000 TO STA 3+580.000 LT NEW 200mm x 40M UNDERDRAIN W/ FLUSHING BASIN AT STA 3+540.000 LT

STA 3+580.000 LT NEW 200mm x 6M UNDERDRAIN CARRIER PIPE W/ FLUSHING BASIN AT STA 3+580.000 LT

STA 3+660.000 TO STA 3+760.000 LT NEW 200mm x 100M UNDERDRAIN W/ FLUSHING BASIN AT STA 3+740.000 LT

STA 3+680.000 TO STA 3+760.000 RT NEW 200MM x 80M UNDERDRAIN

STA 3+580.000 TO STA 3+600.000 RT NEW 200mm x 2M UNDERDRAIN CARRIER PIPE W/ FLUSHING BASIN AT STA 3+580.000 RT

STA 3+548.000 TO STA 3+580.000 RT NEW 200mm x 32M UNDERDRAIN W/ FLUSHING BASIN AT STA 3+548.000 RT

STA 3+627.500 ℄ NEW 1850 x 1850 x 1680D PRECAST CONCRETE BOX SEE BRIDGE DETAILS SHEET 229 OF 450

STA 3+486 ℄ 75° 37' 27" LT RSKEW = 75° 37' 27" NEW 900MM x 22M CAP NEW CMM CRADLE HEADWALL AT INLET AND OUTLET STONE FILL TYPE II AT INLET (L=3.6M, D=0.6M, W=1.35M) STONE FILL TYPE II AT OUTLET (L=3.6M, D=0.6M, W=1.35M)

PI 3+472.559 = 3+471.669

CURVE #11
Δ 16° 35' 50" LT
R 436.000 M
L 126.298 M
T 63.594 M
E 4.613 M
B 4.400%

STA 3+460.000 TO STA 3+461.770 RT
PERMANENT SEDIMENT TRAP
SEE DETAIL SHEET 162 OF 450

APPROXIMATE LOCATION OF EXISTING UNDERGROUND TELEPHONE CABLE (VERIZON) TO BE RELOCATED AERIALLY

KEEP OUT
DO NOT DISTURB

AERIAL RELOCATION ROUTE

WETLAND H

FARMLAND

1½SWF

ROW PT STA 3+531.498 7.766M LT.

ROW/PL STA 3+512.809 7.602M LT.

ROW PT STA 3+531.660 7.321M RT.

S to 3+535.263 PT

100 MPL SAVE

CURVE R-392.456 L=110.234

CURVE R-407.544 L=114.472

CURVE R-557.544 L=107.44

CURVE R-687.544 L=13.181

CURVE R=337.456 L=8.251

CURVE R=352.544 L=8.344

CURVE R-672.456 L=12.892

CURVE R-542.456 L=10.453

EXTEND EXISTING FIELD DRAIN AS NEEDED

N47° 27' 31" E
647.625

3+500
3+600
3+700

3.0M DRIVE(T)
7.0M DRIVE(T)

0 10 20 30
SCALE IN METERS

○ DENOTES TREE OR STUMP REMOVAL

NOTES:
1. ALL SIDE ROAD RADII SHALL BE 11M UNLESS OTHERWISE NOTED. REFER TO STD B-12M
2. ALL DRIVE RADII SHALL BE 6M UNLESS OTHERWISE NOTED. REFER TO STD B-7IM

EXISTING R.O.W. CALCULATED POINT
N60°35'48"E 17.193 EXISTING R.O.W. DATA (TYPICAL)

LINES SHOWN ON THIS PLAN AS EXISTING PROPERTY LINES P/L ARE BELIEVED TO BE ACCURATE BUT SHOULD NOT BE RELIED UPON FOR PURPOSES UNRELATED TO THE STATE OF VERMONT'S ACQUISITION OF LAND AND RIGHTS FOR THIS PROJECT.

FOR R.O.W. USE ONLY

SEE LAYOUT SHEETS FOR CONSTRUCTION CHANGES

(R.O.W. AS BUILT)

PROJECT NAME: HIGHGATE-FRANKLIN ~~(AS BUILT)~~
PROJECT NUMBER: STP RS 0301(1) SA

FILE NAME: NAME$DGN
PROJECT LEADER: DELLASANTA
DESIGNED BY: SQUAD B
ROW LAYOUT SHEET ~~8A OF 26~~ 55 OF 73

PLOT DATE: 12-FEB-2014 11:47
DRAWN BY: ~~N. GARBACIK~~ ROW
CHECKED BY: H. PETROVS
SHEET 49 ~~55A~~ OF ~~73~~ 450

SLEEVES FOR UTILITIES (115 mm DIAMETER)(MOD)
STA 3+835.000 RT TO STA 20+038.748 LT

CONSTRUCT DRIVE
STA 3+772.000 LT GRAVEL
STA 3+845.000 RT GRAVEL
STA 4+086.000 RT GRAVEL

CONSTRUCT SPECIAL DITCH
STA 3+810.000 TO STA 3+830.000 RT
STA 3+930.000 TO STA 4+030.000 RT

VAOT Metric

N
VT STATE PLANE GRID

AERIAL E
GUY
AERIAL E
AERIAL E
AERIAL E
AERIAL E
AERIAL E
AERIAL E
AERIAL E

REVISED PROPOSED UNDERGROUND SLEEVE FOR UTILITIES INSTALL WITHIN R.O.W. SEE DETAIL SHEET 68 OF 450

ROW P.O.T. TH32 STA.20+070.000 7.54M LT.

ROW P.O.T. TH32 STA.20+070.000 7.54M RT.

TIE LINE 15.087M

20+070

TH #32 CONST.℄ P.O.T. 20+030.000
END SIDELINE CONSTRUCTION
CONSTRUCT SATISFACTORY APPROACH

STA 20+004.596
BEGIN SIDELINE CONSTRUCTION

6E
BESSETTE,DONALD P. & FRANCES M.
BESSETTE, SCOTT D.
BESSETTE, MARC D.
JOINED BY VERMONT LAND TRUST, INC. ET AL

STA 3+765.755 TO STA 3+780.650 LT
NEW 450mm x 11M CSP 1.63mm PLASTIC FIELD CULVERT
REMOVE EXISTING 205mm CMP

66D
BESSETTE,DONALD P. & FRANCES M. JOINED BY VERMONT LAND TRUST, INC. ET AL

N63°14'30"W
140.000

64.88M

58.37M

ROW PC STA.3+846.51 8.04M LT.

TH #32
3+812.00 7.72M LT. (25.3')
20+026.00 7.54M LT. (24.7')
19.07M (62.6')

DRIVE(T) 3.1M

DITCH(P)
CONST(T)
SR(T)
CUL.(T)

73.442

CONST(T)
SR(T)

DEP(P)

14.78M (48.5')

18.21M (59.7')

3+830.21 1.88M LT. (25.9')

20+000

REMOVE (T)

STA 3+854.℄
REMOVE EXISTING 380mm CMP

CURVE R-2107.544 L-22.936

FARMLAND

STA 3+760.000 TO STA 4+120.000 LT
NEW 200mm x 360M UNDERDRAIN
W/ FLUSHING BASIN AT STA 3+820.000 LT

12B
BESSETTE,DONALD P. & FRANCES M. BESSETTE, BRIAN H.

INSTALL & MAINTAIN(P)

119.364

CONST(T)
SR(T)

FARMLAND

CURVE R-5327.456 L-109.19

183.990

49 OF 450
SEE SHEET 55A OF 73

SEE SHEET 57A OF 73
51 OF 450

N47° 27' 31" E
647.625

3+800
3+900
4+000
4+100

AERIAL T
UTILITY BOX
UE(P)
CUL.(T)
SR(T)
CONST(T)
89.889

4.0M
DRIVE(T)

ROW PC STA.3+846.783 7.07M RT.

TH #3 CONST. ℄ P.O.T. 3+841.250 =
TH #32 P.O.T. 20+000.000
SKEW = 20° 39' 51" LT

CURVE R-2092.456 L-22.772

STA 3+838.491 TO STA 3+850.923 RT
NEW 450mm x 15M CSP 1.63mm

INSTALL & MAINTAIN(P)

AERIAL RELOCATION ROUTE BY VERIZON

APPROXIMATE LOCATION OF EXISTING UNDERGROUND TELEPHONE CABLE (VERIZON) TO BE RELOCATED WITHIN R.O.W.

12A
BESSETTE,DONALD P. & FRANCES M. BESSETTE, BRIAN H.

CURVE R-5342.544 L-109.50

119.364

183.990

4.5M
DRIVE(E)

CUL (T)

STA 4+083.769 TO STA 4+093.699 RT
NEW 450mm x 10M CSP 1.63mm

FARMLAND

GUY

MATCHLINE

MATCHLINE

STA 3+760.000 TO STA 4+120.000 RT
AND W/ 200mm x 360M UNDERDRAIN AT STA 3+780.000 RT
AND W/ FLUSHING BASIN AT STA 3+800.000 RT
AND W/ FLUSHING BASIN AT STA 3+880.000 RT
AND W/ FLUSHING BASIN AT STA 4+100.000 RT

67
BESSETTE,DONALD P. & FRANCES M. (FORMERLY INCLUDED BESSETTE BRIAN H.)

0 10 20 30
SCALE IN METERS

○ DENOTES TREE OR STUMP REMOVAL

NOTES:
1. ALL SIDE ROAD RADII SHALL BE 11M UNLESS OTHERWISE NOTED. REFER TO STD B-12M
2. ALL DRIVE RADII SHALL BE 6M UNLESS OTHERWISE NOTED. REFER TO STD B-71M

EXISTING R.O.W. CALCULATED POINT
N68°35'48"E 17.193 EXISTING R.O.W. DATA (TYPICAL)

SEE LAYOUT SHEETS FOR CONSTRUCTION CHANGES

LINES SHOWN ON THIS PLAN AS EXISTING PROPERTY LINES P/L ARE BELIEVED TO BE ACCURATE BUT SHOULD NOT BE RELIED UPON FOR PURPOSES UNRELATED TO THE STATE OF VERMONT'S ACQUISITION OF LAND AND RIGHTS FOR THIS PROJECT.

FOR R.O.W. USE ONLY

(R.O.W. AS BUILT)

PROJECT NAME: HIGHGATE-FRANKLIN ~~(AS BUILT)~~
PROJECT NUMBER: STP RS 0301(1) SA

FILE NAME: NAME$DGN
PROJECT LEADER: DELLASANTA
DESIGNED BY: SQUAD B
ROW LAYOUT SHEET ~~9A OF 26~~ 56 OF 73

PLOT DATE: 12-FEB-2014 11:47
DRAWN BY: ~~N. GARBACIK~~ ROW
CHECKED BY: H. PETROVS
SHEET 50 ~~56A~~ OF ~~73~~ 450

CONSTRUCT DRIVE
STA 4+125.000 RT GRAVEL
STA 4+255.000 LT GRAVEL
STA 4+275.000 LT GRAVEL
STA 4+297.000 RT GRAVEL
STA 4+347.000 RT GRAVEL
STA 4+390.000 LT GRAVEL
STA 4+417.000 RT GRAVEL

STEEL BEAM GUARDRAIL
STA 4+476.314 TO STA 4+480.000 LT

RELOCATE MAIL BOX, SINGLE SUPPORT
STA 4+305.000 LT
STA 4+421.000 LT

ANCHOR FOR STEEL BEAM RAIL
STA 4+476.314 LT

STONE FILL TYPE II
STA 4+477.320 TO STA 4+480.000 LT

GRUBBING MATERIAL
STA 4+477.320 TO STA 4+480.000 LT

EROSION MATTING (JUTE)
STA 4+477.320 TO STA 4+480.000 LT

REMOVING AND RESETTING FENCE
STA 4+392.000 RT - 3M BACK

CONSTRUCT SPECIAL DITCH
STA 4+230.000 TO STA 4+293.000 RT
STA 4+290.000 TO STA 4+385.500 LT
STA 4+394.500 TO STA 4+470.000 LT

VERTICAL GRANITE CURB
STA 4+247.960 TO STA 4+253.040 LT
STA 4+256.810 TO STA 4+272.830 LT
STA 4+276.590 TO STA 4+297.000 LT

SLEEVES FOR UTILITIES (115 mm DIAMETER)(MOD)
STA 4+235.000 RT TO STA 4+455.000 LT

VAOT Metric

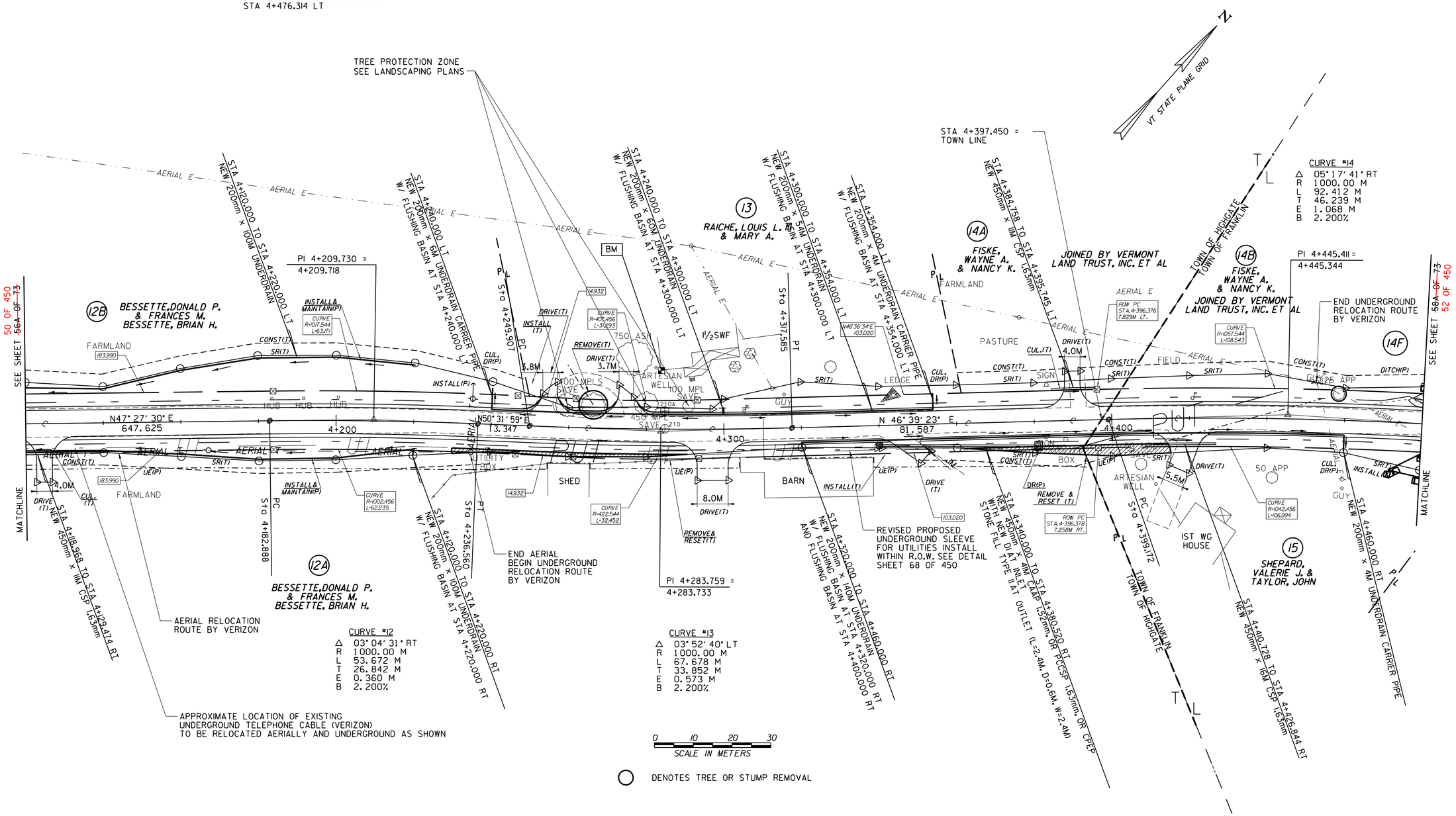

SEE LAYOUT SHEETS FOR CONSTRUCTION CHANGES

NOTES:
1. ALL SIDE ROAD RADII SHALL BE 11M UNLESS OTHERWISE NOTED. REFER TO STD B-12M
2. ALL DRIVE RADII SHALL BE 6M UNLESS OTHERWISE NOTED. REFER TO STD B-7IM

EXISTING R.O.W. CALCULATED POINT
N60°35'48"E 17.193 EXISTING R.O.W. DATA (TYPICAL)

LINES SHOWN ON THIS PLAN AS EXISTING PROPERTY LINES P/L ARE BELIEVED TO BE ACCURATE BUT SHOULD NOT BE RELIED UPON FOR PURPOSES UNRELATED TO THE STATE OF VERMONT'S ACQUISITION OF LAND AND RIGHTS FOR THIS PROJECT.

FOR R.O.W. USE ONLY

(R.O.W. AS BUILT)

PROJECT NAME: HIGHGATE-FRANKLIN ~~(AS BUILT)~~
PROJECT NUMBER: STP RS 0301(I) SA

FILE NAME: NAME$DGN
PROJECT LEADER: DELLASANTA
DESIGNED BY: SQUAD B
ROW LAYOUT SHEET ~~10A OF 26~~ 57 OF 73
PLOT DATE: 12-FEB-2014 11:47
DRAWN BY: ~~N. GARBACIK~~ ROW
CHECKED BY: H. PETROVS
SHEET 51 ~~57A~~ OF ~~73~~ 450

Metric

STEEL BEAM GUARDRAIL
STA 4+480.000 TO STA 4+498.788 LT
STA 4+488.749 TO STA 4+496.130 RT

CONSTRUCT DRIVE
STA 4+637.000 LT GRAVEL
STA 4+639.000 RT GRAVEL

ANCHOR FOR STEEL BEAM RAIL
STA 4+488.749 RT
STA 4+496.130 RT
STA 4+498.788 LT

CONSTRUCT SPECIAL DITCH
STA 4+491.500 TO STA 4+492.500 RT
STA 4+670.000 TO STA 4+750.000 LT
STA 4+790.000 TO STA 4+820.000 RT

STONE FILL, TYPE II
STA 4+480.000 TO STA 4+495.150 LT

EROSION MATTING (JUTE)
STA 4+480.000 TO STA 4+495.150 LT

GRUBBING MATERIAL
STA 4+480.000 TO STA 4+495.150 LT

VT STATE PLANE GRID

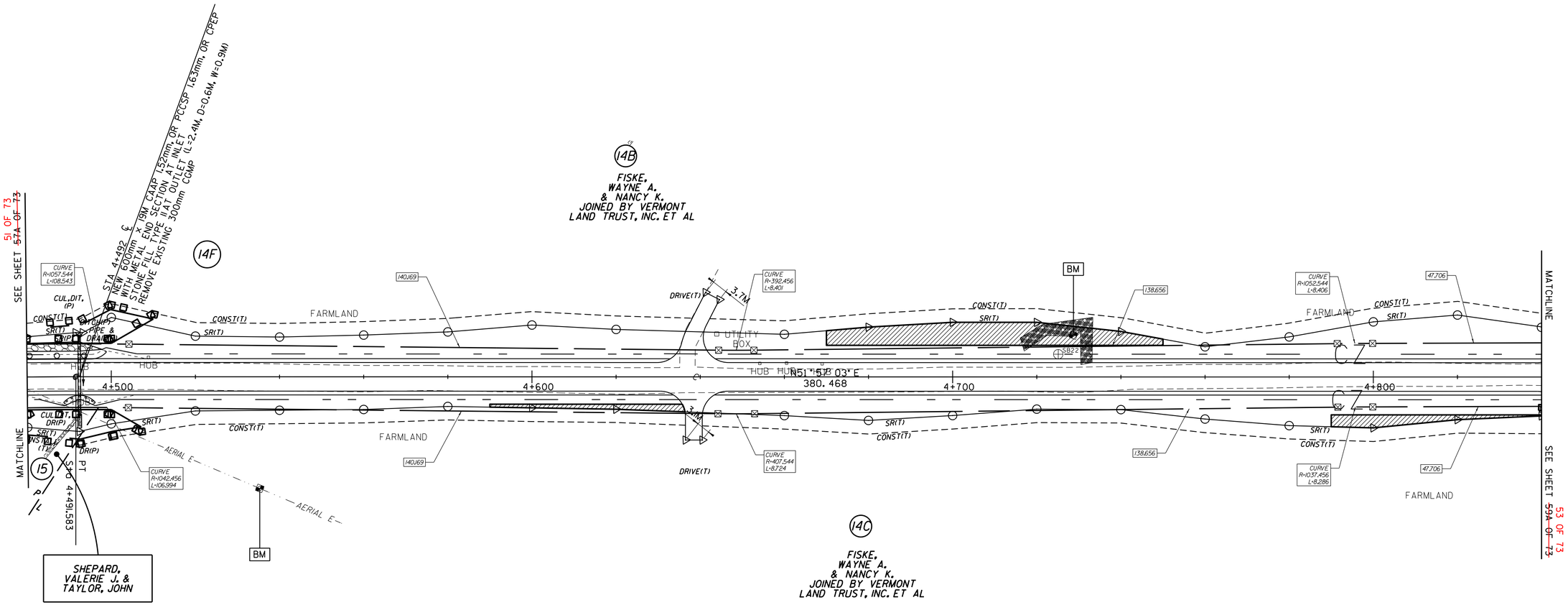

0 10 20 30
SCALE IN METERS

○ DENOTES TREE OR STUMP REMOVAL

NOTES:
1. ALL SIDE ROAD RADII SHALL BE 11M UNLESS OTHERWISE NOTED. REFER TO STD B-12M
2. ALL DRIVE RADII SHALL BE 6M UNLESS OTHERWISE NOTED. REFER TO STD B-71M

EXISTING R.O.W. CALCULATED POINT
N60°35'48"E 17.193 EXISTING R.O.W. DATA (TYPICAL)

SEE LAYOUT SHEETS FOR CONSTRUCTION CHANGES

(R.O.W. AS BUILT)

LINES SHOWN ON THIS PLAN AS EXISTING PROPERTY LINES P/L ARE BELIEVED TO BE ACCURATE BUT SHOULD NOT BE RELIED UPON FOR PURPOSES UNRELATED TO THE STATE OF VERMONT'S ACQUISITION OF LAND AND RIGHTS FOR THIS PROJECT.

FOR R.O.W. USE ONLY

PROJECT NAME: HIGHGATE-FRANKLIN ~~(AS BUILT)~~
PROJECT NUMBER: STP RS 0301(I) SA

FILE NAME: NAME$DGN
PROJECT LEADER: DELLASANTA
DESIGNED BY: SQUAD B
ROW LAYOUT SHEET ~~11A OF 26~~ 58 OF 73

PLOT DATE: 12-FEB-2014 11:47
DRAWN BY: ~~N. GARBACIK~~ ROW
CHECKED BY: H. PETROVS
SHEET 52 ~~58A~~ OF ~~73~~ 450

VAOT Metric

CONSTRUCT DRIVE
STA 4+847.000 LT GRAVEL
STA 4+847.000 RT GRAVEL
STA 4+872.000 LT GRAVEL
STA 4+935.000 LT GRAVEL

STEEL BEAM GUARDRAIL
STA 5+013.312 TO STA 5+047.532 LT
STA 5+024.731 TO STA 5+042.267 RT

MANUFACTURED TERMINAL SECTION (TANGENT)
STA 4+998.071 TO STA 5+013.312 LT
STA 5+009.491 TO STA 5+024.731 RT
STA 5+047.532 TO STA 5+062.772 LT

ANCHOR FOR STEEL RAIL
STA 5+042.267 RT

RELOCATE MAIL BOX,SINGLE SUPPORT
STA 4+935.500 LT

STONE FILL, TYPE II
STA 4+998.230 TO STA 5+062.740 LT
STA 5+009.649 TO STA 5+036.100 RT

EROSION MATTING (JUTE)
STA 4+998.230 TO STA 5+062.740 LT
STA 5+009.649 TO STA 5+036.100 RT

CONSTRUCT SPECIAL DITCH
STA 4+820.000 TO STA 4+843.250 RT
STA 4+890.000 TO STA 4+990.000 RT
STA 5+070.000 TO STA 5+130.000 RT
STA 5+070.000 TO STA 5+130.000 LT

GRUBBING MATERIAL
STA 4+998.230 TO STA 5+062.740 LT
STA 5+009.649 TO STA 5+036.100 RT

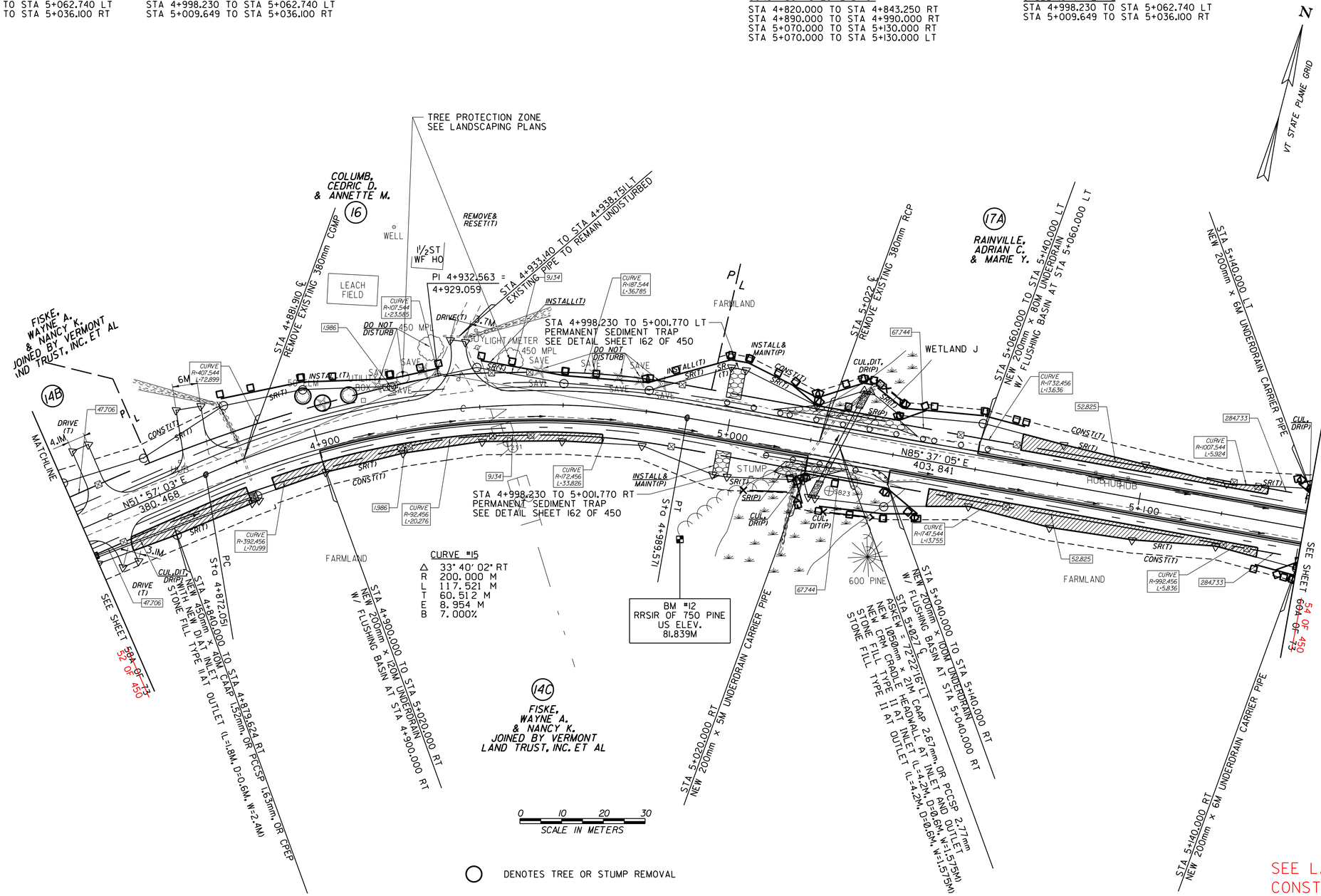

○ DENOTES TREE OR STUMP REMOVAL

SEE LAYOUT SHEETS FOR CONSTRUCTION CHANGES

LINES SHOWN ON THIS PLAN AS EXISTING PROPERTY LINES P/L ARE BELIEVED TO BE ACCURATE BUT SHOULD NOT BE RELIED UPON FOR PURPOSES UNRELATED TO THE STATE OF VERMONT'S ACQUISITION OF LAND AND RIGHTS FOR THIS PROJECT.

FOR R.O.W. USE ONLY

NOTES:
1. ALL SIDE ROAD RADII SHALL BE 11M UNLESS OTHERWISE NOTED. REFER TO STD B-12M
2. ALL DRIVE RADII SHALL BE 6M UNLESS OTHERWISE NOTED. REFER TO STD B-7IM

EXISTING R.O.W. CALCULATED POINT
N68°35'48"E 17.193 EXISTING R.O.W. DATA (TYPICAL)

(R.O.W. AS BUILT)

PROJECT NAME: HIGHGATE-FRANKLIN ~~(AS BUILT)~~
PROJECT NUMBER: STP RS 0301(I) SA

FILE NAME: NAME$DGN
PROJECT LEADER: DELLASANTA
DESIGNED BY: SQUAD B
ROW LAYOUT SHEET ~~12A OF 26~~ 59 OF 73

PLOT DATE: 12-FEB-2014 11:47
DRAWN BY: ~~N. GARBACIK~~ ROW
CHECKED BY: H. PETROVS
SHEET 53 ~~59A~~ OF ~~73~~ 450

CONSTRUCT DRIVE
STA 5+264.000 RT GRAVEL

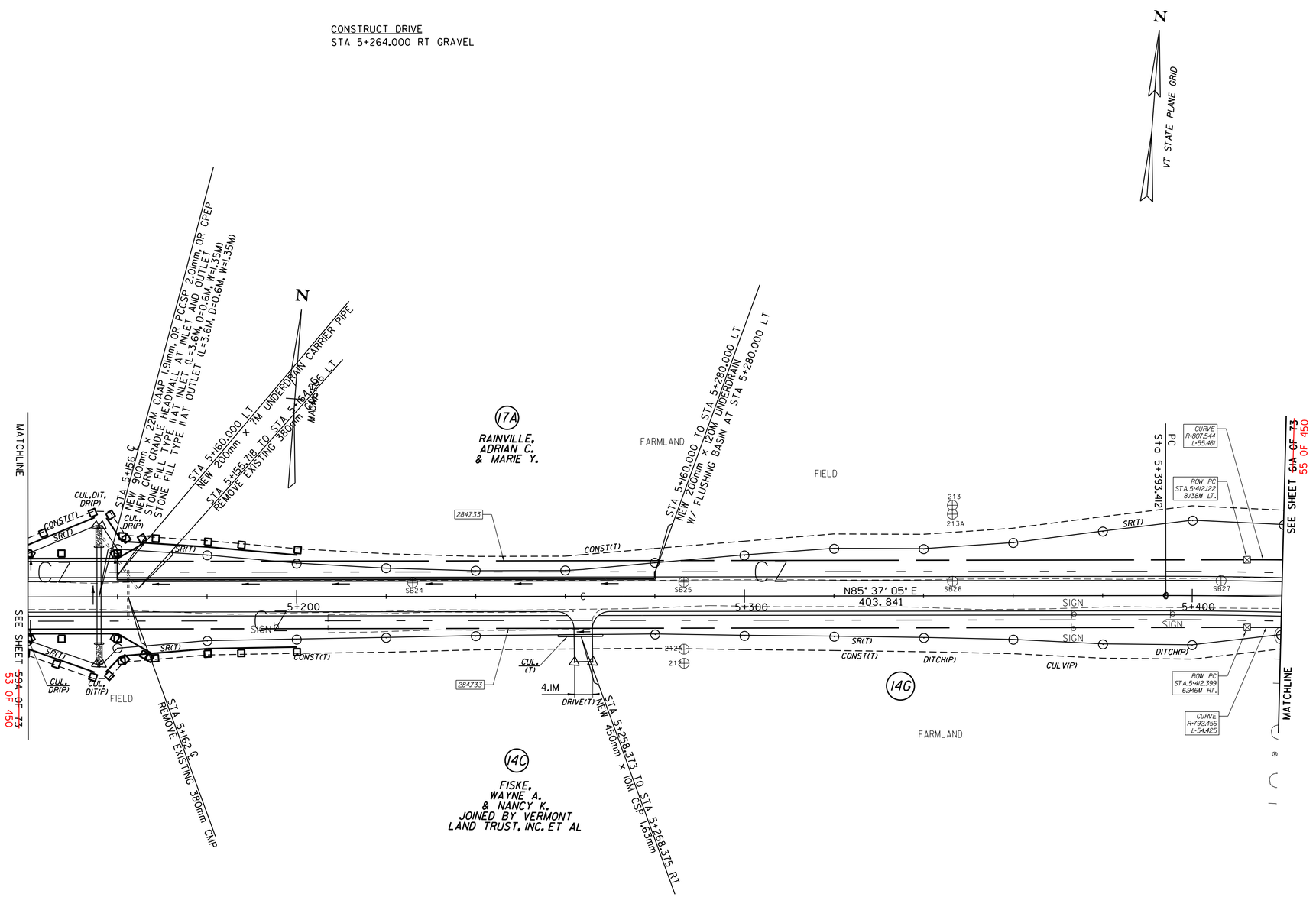

0 10 20 30
SCALE IN METERS

○ DENOTES TREE OR STUMP REMOVAL

NOTES:
1. ALL SIDE ROAD RADII SHALL BE 11M UNLESS OTHERWISE NOTED. REFER TO STD B-12M
2. ALL DRIVE RADII SHALL BE 6M UNLESS OTHERWISE NOTED. REFER TO STD B-7IM

SEE LAYOUT SHEETS FOR CONSTRUCTION CHANGES

(R.O.W. AS BUILT)

LINES SHOWN ON THIS PLAN AS EXISTING PROPERTY LINES P/L ARE BELIEVED TO BE ACCURATE BUT SHOULD NOT BE RELIED UPON FOR PURPOSES UNRELATED TO THE STATE OF VERMONT'S ACQUISITION OF LAND AND RIGHTS FOR THIS PROJECT.

FOR R.O.W. USE ONLY

PROJECT NAME: HIGHGATE-FRANKLIN ~~(AS BUILT)~~
PROJECT NUMBER: STP RS 0301(I) SA

FILE NAME: NAME$DGN
PROJECT LEADER: DELLASANTA
DESIGNED BY: SQUAD B
ROW LAYOUT SHEET ~~13A OF 26~~ 60 OF 73

PLOT DATE: 12-FEB-2014 11:47
DRAWN BY: ~~N. GARBACIK~~ ROW
CHECKED BY: H. PETROVS
SHEET 54 ~~60A~~ OF ~~73~~ 450

FOR R.O.W. USE ONLY

LINES SHOWN ON THIS PLAN AS EXISTING PROPERTY LINES P/L ARE BELIEVED TO BE ACCURATE BUT SHOULD NOT BE RELIED UPON FOR PURPOSES UNRELATED TO THE STATE OF VERMONT'S ACQUISITION OF LAND AND RIGHTS FOR THIS PROJECT.

CONSTRUCT DRIVE

STA 5+575.000 RT GRAVEL
STA 5+628.000 LT GRAVEL
STA 5+735.000 LT GRAVEL
STA 5+764.000 LT GRAVEL

PORTLAND CEMENT CONCRETE SIDEWALK, 125MM

STA 5+529.000 RT (3M BACK)

CONSTRUCT SPECIAL DITCH

STA 5+450.000 TO STA 5+490.000 RT
STA 5+510.000 TO STA 5+590.000 LT
STA 21+050.000 TO STA 21+055.000 RT
STA 22+005.000 TO STA 22+071.000 LT
STA 22+005.000 TO STA 22+071.000 RT
STA 5+730.000 TO STA 5+780.000 RT
STA 5+766.500 TO STA 5+780.000 LT

VERTICAL GRANITE CURB

TH #24 STA 21+060.000 LT TO ML STA 5+540.000

REMOVING AND RESETTING FENCE

TH #15 STA 22+023.530 RT 2M BACK
TH #15 STA 22+023.530 TO STA 22+077.000 RT
STA 5+576.160 TO STA 5+600.000 LT

SNOW FENCE

STA 5+580.000 TO STA 5+660.000 LT

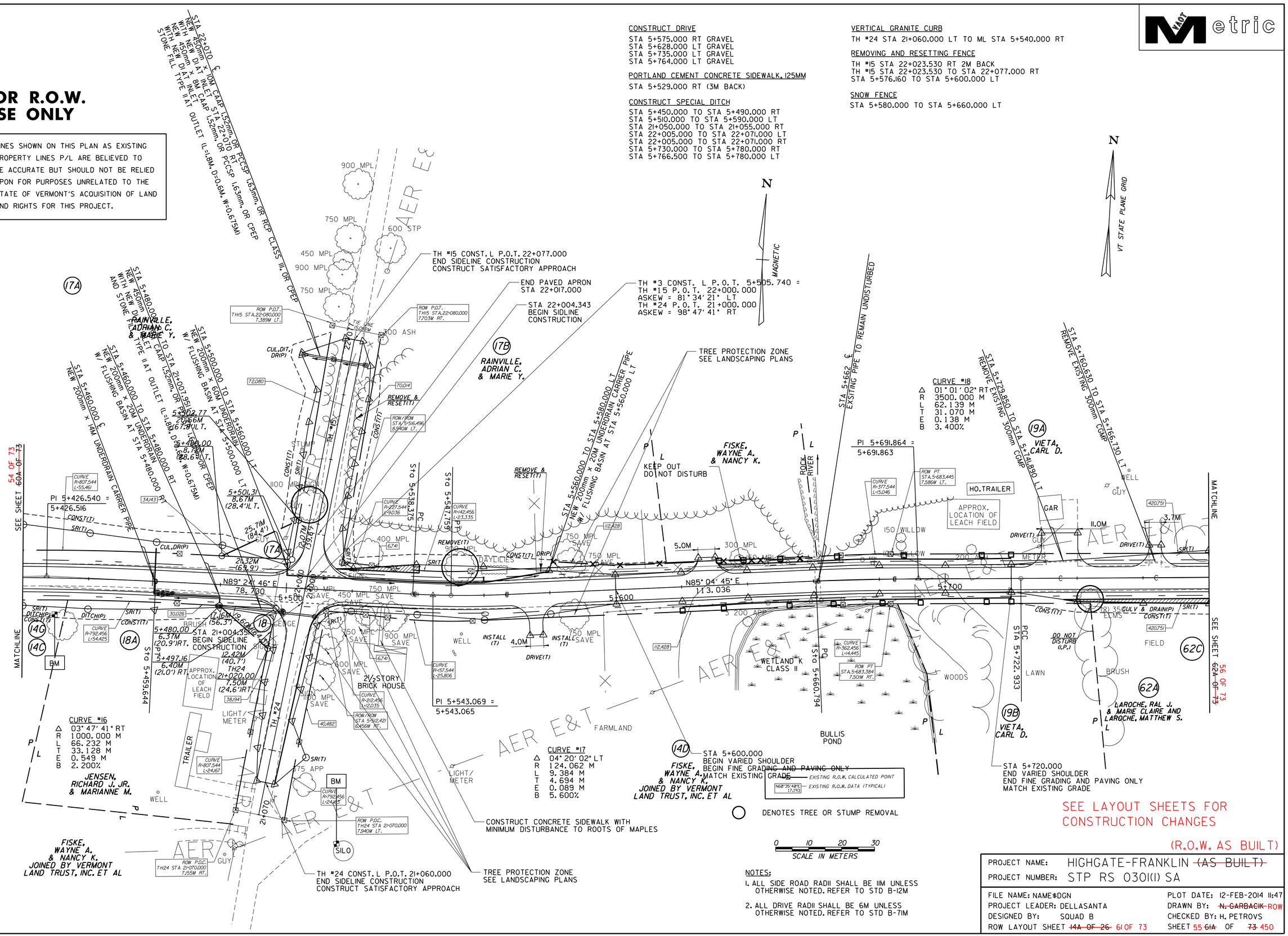

SEE LAYOUT SHEETS FOR CONSTRUCTION CHANGES

(R.O.W. AS BUILT)

NOTES:

1. ALL SIDE ROAD RADII SHALL BE 11M UNLESS OTHERWISE NOTED. REFER TO STD B-12M
2. ALL DRIVE RADII SHALL BE 6M UNLESS OTHERWISE NOTED. REFER TO STD B-7IM

PROJECT NAME:	HIGHGATE-FRANKLIN ~~(AS BUILT)~~
PROJECT NUMBER:	STP RS 0301(I) SA
FILE NAME: NAME$DGN	PLOT DATE: 12-FEB-2014 11:47
PROJECT LEADER: DELLASANTA	DRAWN BY: ~~N. GARBACIK~~ ROW
DESIGNED BY: SQUAD B	CHECKED BY: H. PETROVS
ROW LAYOUT SHEET ~~14A OF 26~~ 61 OF 73	SHEET 55 ~~61A~~ OF ~~73~~ 450

CONSTRUCT DRIVE
STA 6+024.000 LT GRAVEL

REMOVING AND RESETTING FENCE
STA 5+976.000 LT - 5M BACK
STA 5+976.000 TO STA 6+017.000 LT
STA 6+017.000 LT - 3M BACK

CONSTRUCT SPECIAL DITCH
STA 5+780.000 TO STA 5+840.000 LT
STA 5+780.000 TO STA 5+810.000 RT
STA 5+950.000 TO STA 6+030.000 RT
STA 6+010.000 TO STA 6+020.000 LT

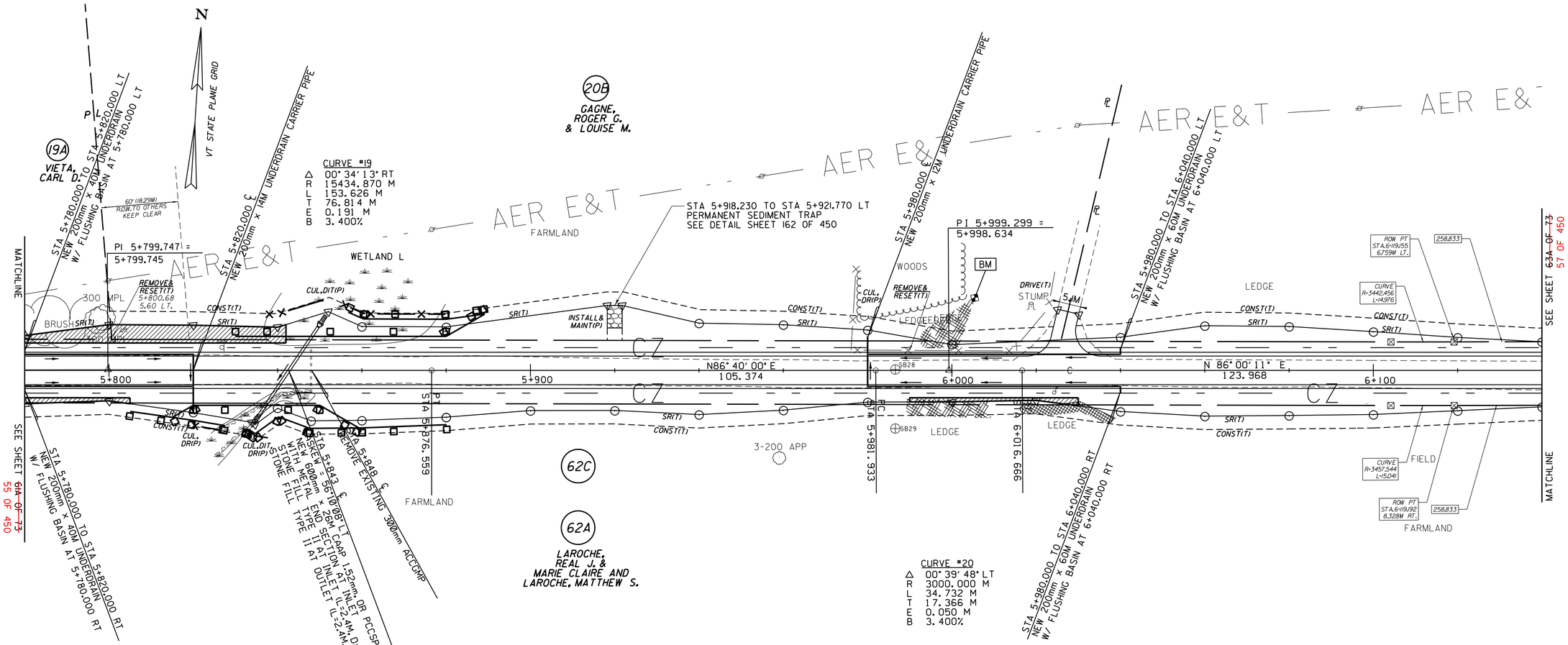

0 10 20 30
SCALE IN METERS

○ DENOTES TREE OR STUMP REMOVAL

NOTES:
1. ALL SIDE ROAD RADII SHALL BE 11M UNLESS OTHERWISE NOTED. REFER TO STD B-12M
2. ALL DRIVE RADII SHALL BE 6M UNLESS OTHERWISE NOTED. REFER TO STD B-71M

⊗ EXISTING R.O.W. CALCULATED POINT
N60°35'48"E 17.193 EXISTING R.O.W. DATA (TYPICAL)

LINES SHOWN ON THIS PLAN AS EXISTING PROPERTY LINES P/L ARE BELIEVED TO BE ACCURATE BUT SHOULD NOT BE RELIED UPON FOR PURPOSES UNRELATED TO THE STATE OF VERMONT'S ACQUISITION OF LAND AND RIGHTS FOR THIS PROJECT.

FOR R.O.W. USE ONLY

SEE LAYOUT SHEETS FOR CONSTRUCTION CHANGES

(R.O.W. AS BUILT)

PROJECT NAME: HIGHGATE-FRANKLIN ~~(AS BUILT)~~
PROJECT NUMBER: STP RS 0301(1) SA

FILE NAME: NAME$DGN
PROJECT LEADER: DELLASANTA
DESIGNED BY: SQUAD B
ROW LAYOUT SHEET ~~15A OF 26~~ 62 OF 73

PLOT DATE: 12-FEB-2014 11:47
DRAWN BY: ~~N. GARBACIK~~ ROW
CHECKED BY: H. PETROVS
SHEET 56 ~~62A~~ OF ~~73~~ 450

VAOT Metric

CONSTRUCT DRIVE
STA 6+150.000 RT GRAVEL
STA 6+386.000 LT GRAVEL
STA 6+386.000 RT GRAVEL

ANCHOR FOR STEEL BEAM RAIL
STA 6+151.067 LT
STA 6+151.957 RT
STA 6+229.209 RT
STA 6+230.803 LT

CONSTRUCT SPECIAL DITCH
STA 6+161.770 TO STA 6+280.000 LT
STA 6+160.000 TO STA 6+270.000 RT
STA 6+370.000 TO STA 6+380.000 RT
STA 6+430.000 TO STA 6+440.000 LT
STA 6+430.000 TO STA 6+440.000 RT

STEEL BEAM GUARDRAIL
STA 6+151.067 TO STA 6+230.803 LT
STA 6+151.957 TO STA 6+229.209 RT

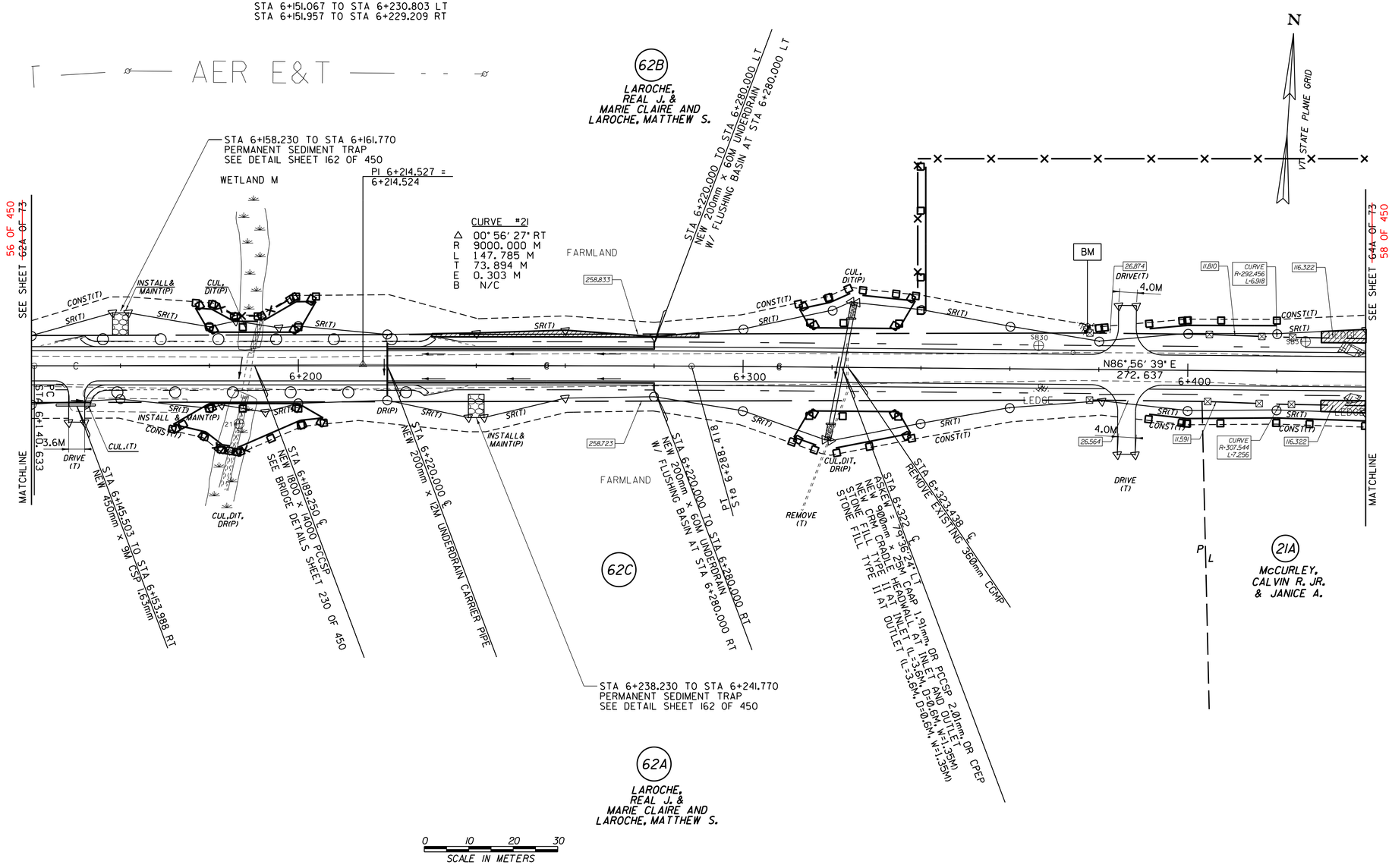

○ DENOTES TREE OR STUMP REMOVAL

NOTES:

1. ALL SIDE ROAD RADII SHALL BE 11M UNLESS OTHERWISE NOTED. REFER TO STD B-12M
2. ALL DRIVE RADII SHALL BE 6M UNLESS OTHERWISE NOTED. REFER TO STD B-71M

EXISTING R.O.W. CALCULATED POINT
N68°35'48"E 17.193 EXISTING R.O.W. DATA (TYPICAL)

LINES SHOWN ON THIS PLAN AS EXISTING PROPERTY LINES P/L ARE BELIEVED TO BE ACCURATE BUT SHOULD NOT BE RELIED UPON FOR PURPOSES UNRELATED TO THE STATE OF VERMONT'S ACQUISITION OF LAND AND RIGHTS FOR THIS PROJECT.

FOR R.O.W. USE ONLY

SEE LAYOUT SHEETS FOR CONSTRUCTION CHANGES

(R.O.W. AS BUILT)

PROJECT NAME: HIGHGATE-FRANKLIN ~~(AS BUILT)~~
PROJECT NUMBER: STP RS 0301(I) SA

FILE NAME: NAME$DGN
PROJECT LEADER: DELLASANTA
DESIGNED BY: SQUAD B
ROW LAYOUT SHEET ~~16A OF 26~~ 63 OF 73

PLOT DATE: 12-FEB-2014 11:47
DRAWN BY: ~~N. GARBACIK~~ ROW
CHECKED BY: H. PETROVS
SHEET 57 ~~63A~~ OF ~~73~~ 450

CONSTRUCT DRIVE
STA 6+507.000 RT GRAVEL
STA 6+513.000 LT GRAVEL
STA 6+541.000 LT GRAVEL
STA 6+658.000 LT GRAVEL
TH *25 STA 23+016.000 RT GRAVEL
TH *25 STA 23+040.000 RT GRAVEL

REMOVING AND RESETTING FENCE
TH *25 STA 23+014.000 TO TH *25 STA 23+056.000 LT
STA 6+630.000 TO STA 6+720.000 RT

RELOCATE MAIL BOX, SINGLE SUPPORT
STA 6+662.104 RT
TH *25 STA 23+050.000 RT

CONSTRUCT SPECIAL DITCH
STA 6+440.000 TO STA 6+450.000 LT
STA 6+440.000 TO STA 6+450.000 RT
STA 6+710.000 TO STA 6+720.000 LT

TREE PROTECTION ZONE
SEE LANDSCAPING PLANS

CURVE *22
Δ 36°11'08" LT
R 125.000 M
L 78.945 M
T 40.839 M
E 6.502 M
B 8.000%

TH *3 CONST. ℄ P.O.T. 6+628.570 =
TH *25 P.O.T. 23+000.000

TH *25 - CURVE *1
Δ 60°12'47" LT
R 20.000 M
L 21.018 M
T 11.597 M
E 3.119 M
B N/C

TH *25 CONST. ℄ P.O.T. 23+055.746
END SIDELINE CONSTRUCTION
CONSTRUCT SATISFACTORY APPROACH

0 10 20 30
SCALE IN METERS

○ DENOTES TREE OR STUMP REMOVAL

NOTES:
1. ALL SIDE ROAD RADII SHALL BE 11M UNLESS OTHERWISE NOTED. REFER TO STD B-12M
2. ALL DRIVE RADII SHALL BE 6M UNLESS OTHERWISE NOTED. REFER TO STD B-7IM

EXISTING R.O.W. CALCULATED POINT
N60°35'48"E 17.193 EXISTING R.O.W. DATA (TYPICAL)

LINES SHOWN ON THIS PLAN AS EXISTING PROPERTY LINES P/L ARE BELIEVED TO BE ACCURATE BUT SHOULD NOT BE RELIED UPON FOR PURPOSES UNRELATED TO THE STATE OF VERMONT'S ACQUISITION OF LAND AND RIGHTS FOR THIS PROJECT.

FOR R.O.W. USE ONLY

SEE LAYOUT SHEETS FOR CONSTRUCTION CHANGES

(R.O.W. AS BUILT)

PROJECT NAME: HIGHGATE-FRANKLIN ~~(AS BUILT)~~
PROJECT NUMBER: STP RS 0301(I) SA

FILE NAME: NAME$DGN
PROJECT LEADER: DELLASANTA
DESIGNED BY: SQUAD B
ROW LAYOUT SHEET ~~17A OF 26~~ 64 OF 73

PLOT DATE: 12-FEB-2014 11:47
DRAWN BY: ~~N. GARBACIK~~ ROW
CHECKED BY: H. PETROVS
SHEET 58 ~~64A~~ OF ~~73~~ 450

MANUFACTURED TERMINAL SECTION (TANGENTIAL)
STA 6+885.920 TO STA 6+901.097 RT

STEEL BEAM GUARDRAIL
STA 6+901.097 TO STA 7+080.000 RT

CONSTRUCT DRIVE
STA 6+774.000 LT GRAVEL
STA 6+790.000 RT GRAVEL
STA 6+810.000 RT GRAVEL
STA 6+830.000 RT GRAVEL
STA 6+840.000 LT GRAVEL
STA 7+030.000 LT GRAVEL
STA 7+053.000 LT GRAVEL

RELOCATE MAIL BOX, SINGLE SUPPORT
STA 6+778.020 RT
STA 6+804.700 RT

REMOVING AND RESETTING FENCE
STA 6+720.000 TO STA 6+737.790 RT
STA 6+737.790 RT - 3.8M BACK
STA 6+816.140 RT - 2.6M BACK

CONSTRUCT SPECIAL DITCH
STA 6+720.000 TO STA 6+769.000 LT
STA 6+775.000 TO STA 6+825.000 RT
STA 6+845.000 TO STA 6+950.000 LT
STA 7+057.000 TO STA 7+070.000 LT

STONE FILL, TYPE II
STA 6+885.920 TO STA 7+080.000 RT

EROSION MATTING (JUTE)
STA 6+885.920 TO STA 7+080.000 RT

GRUBBING MATERIAL
STA 6+885.920 TO STA 7+080.000 RT

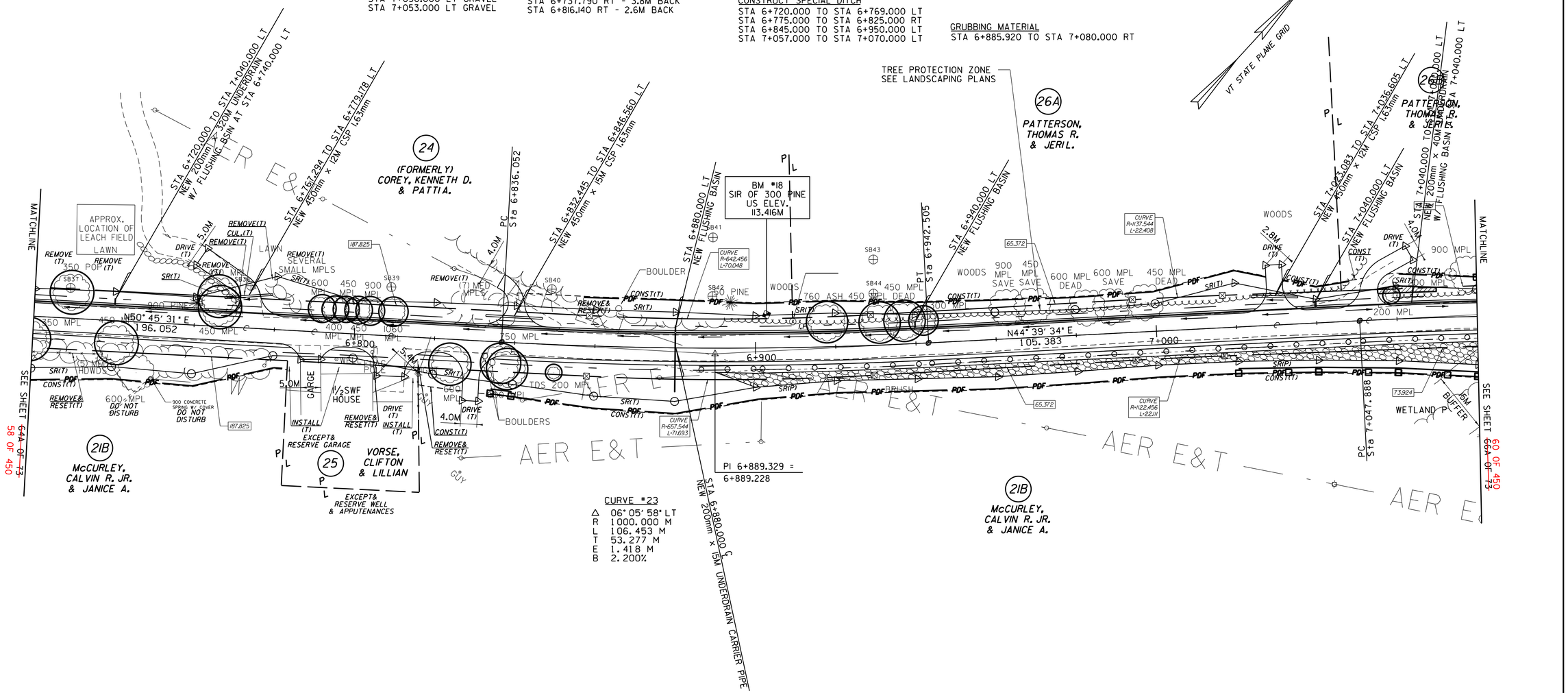

0 10 20 30
SCALE IN METERS

○ DENOTES TREE OR STUMP REMOVAL

NOTES:
1. ALL SIDE ROAD RADII SHALL BE 11M UNLESS OTHERWISE NOTED. REFER TO STD B-12M
2. ALL DRIVE RADII SHALL BE 6M UNLESS OTHERWISE NOTED. REFER TO STD B-71M

EXISTING R.O.W. CALCULATED POINT
N68°35'48"E 17.193 EXISTING R.O.W. DATA (TYPICAL)

LINES SHOWN ON THIS PLAN AS EXISTING PROPERTY LINES P/L ARE BELIEVED TO BE ACCURATE BUT SHOULD NOT BE RELIED UPON FOR PURPOSES UNRELATED TO THE STATE OF VERMONT'S ACQUISITION OF LAND AND RIGHTS FOR THIS PROJECT.

FOR R.O.W. USE ONLY

SEE LAYOUT SHEETS FOR CONSTRUCTION CHANGES

(R.O.W. AS BUILT)

PROJECT NAME: HIGHGATE-FRANKLIN ~~(AS BUILT)~~
PROJECT NUMBER: STP RS 0301(I) SA

FILE NAME: NAME$DGN
PROJECT LEADER: DELLASANTA
DESIGNED BY: SQUAD B
ROW LAYOUT SHEET ~~18A OF 26~~ 65 OF 73

PLOT DATE: 12-FEB-2014 11:47
DRAWN BY: ~~N. GARBACIK~~ ROW
CHECKED BY: H. PETROVS
SHEET 59 ~~65A~~ OF ~~73~~ 450

STEEL BEAM GUARDRAIL
STA 7+080.000 TO STA 7+360.000 RT

MANUFACTURED TERMINAL SECTION (TANGENTIAL)
STA 7+360.000 TO STA 7+375.243 RT

STONE FILL TYPE II
STA 7+080.000 TO STA 7+375.243 RT

GRUBBING MATERIAL
STA 7+080.000 TO STA 7+375.243 RT

EROSION MATTING (JUTE)
STA 7+080.000 TO STA 7+375.243 RT

CONSTRUCT DRIVE
STA 7+405.000 LT PAVED

RELOCATE MAIL BOX, SINGLE SUPPORT
STA 7+411.500 RT TO STA 7+398.780 LT

REMOVING AND RESETTING FENCE
STA 7+341.210 RT - 4.9M BACK

STONE FILL TYPE I
STA 6+800.000 TO STA 6+850.000 LT

CONSTRUCT SPECIAL DITCH
STA 7+170.000 TO STA 7+230.000 LT
STA 7+270.000 TO STA 7+310.000 LT
STA 7+370.000 TO STA 7+400.000 LT
STA 7+410.000 TO STA 7+420.000 LT

VAOT Metric

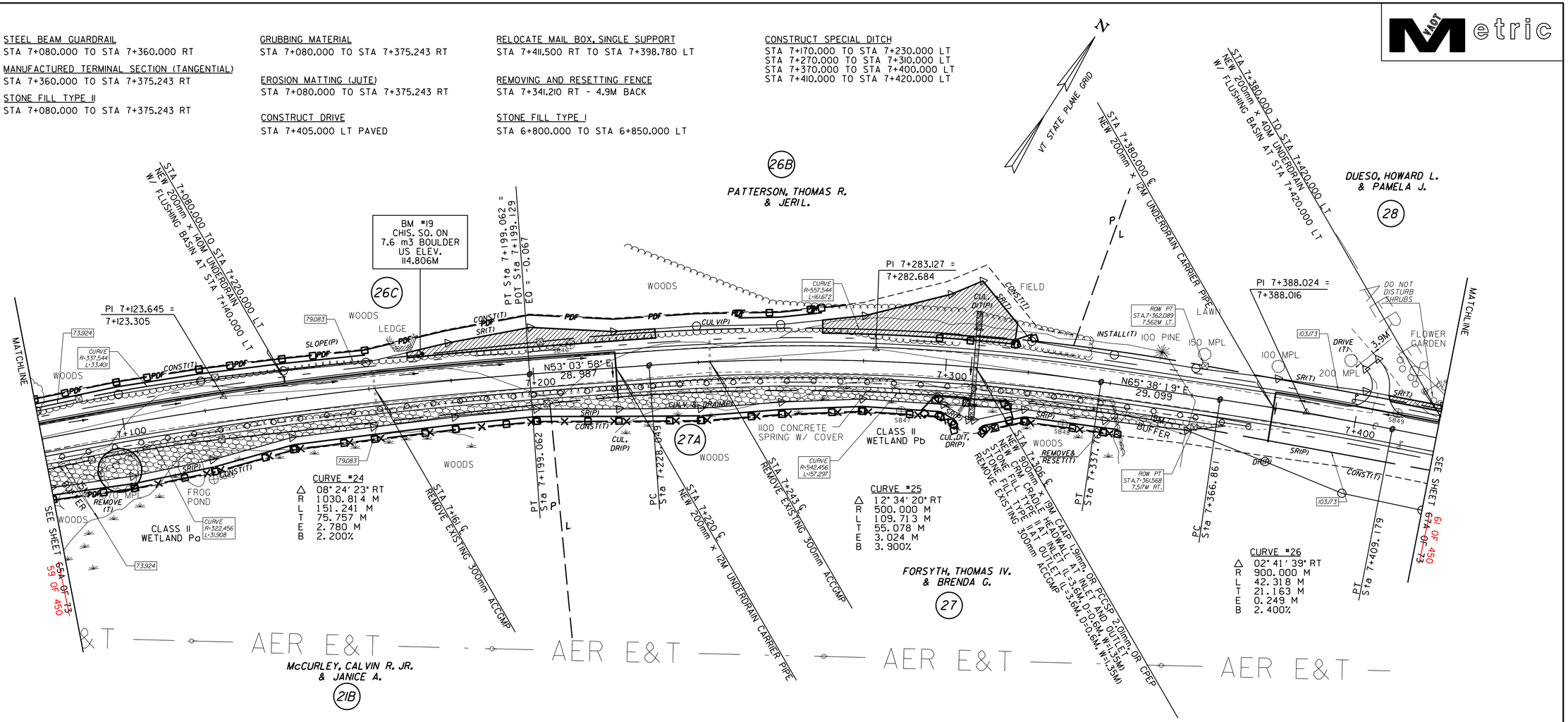

○ DENOTES TREE OR STUMP REMOVAL

NOTES:
1. ALL SIDE ROAD RADII SHALL BE 11M UNLESS OTHERWISE NOTED. REFER TO STD B-12M
2. ALL DRIVE RADII SHALL BE 6M UNLESS OTHERWISE NOTED. REFER TO STD B-71M

EXISTING R.O.W. CALCULATED POINT
N68°35'48"E 17.193 EXISTING R.O.W. DATA (TYPICAL)

LINES SHOWN ON THIS PLAN AS EXISTING PROPERTY LINES P/L ARE BELIEVED TO BE ACCURATE BUT SHOULD NOT BE RELIED UPON FOR PURPOSES UNRELATED TO THE STATE OF VERMONT'S ACQUISITION OF LAND AND RIGHTS FOR THIS PROJECT.

FOR R.O.W. USE ONLY

SEE LAYOUT SHEETS FOR CONSTRUCTION CHANGES

(R.O.W. AS BUILT)

PROJECT NAME: HIGHGATE-FRANKLIN ~~(AS BUILT)~~
PROJECT NUMBER: STP RS 0301(1) SA

FILE NAME: NAME$DGN
PROJECT LEADER: DELLASANTA
DESIGNED BY: SQUAD B
ROW LAYOUT SHEET ~~19A OF 26~~ 66 OF 73

PLOT DATE: 12-FEB-2014 11:47
DRAWN BY: ~~N. GARBACIK~~ ROW
CHECKED BY: H. PETROVS
SHEET 60~~66A~~ OF ~~73~~ 450

CONSTRUCT DRIVE
STA 7+504.000 RT GRAVEL
STA 7+618.000 LT PAVED
STA 7+653.000 LT PAVED

ANCHOR FOR STEEL BEAM RAIL
STA 7+508.500 RT
STA 7+564.670 RT

STONE FILL, TYPE II
STA 7+508.500 TO STA 7+564.670 RT

GRUBBING MATERIAL
STA 7+508.500 TO STA 7+564.670 RT

EROSION MATTING (JUTE)
STA 7+508.500 TO STA 7+564.670 RT

STEEL BEAM GUARDRAIL
STA 7+508.500 TO STA 7+564.670 RT

RELOCATE MAIL BOX, SINGLE SUPPORT
STA 7+508.211 RT
STA 7+661.000 RT TO STA 7+644.030 LT

CONSTRUCT SPECIAL DITCH
STA 7+420.000 TO STA 7+496.500 LT
STA 7+503.500 TO STA 7+615.250 LT
STA 7+620.750 TO STA 7+648.250 LT
STA 7+675.750 TO STA 7+720.000 LT

REMOVING AND RESETTING FENCE
STA 7+506.250 TO STA 7+639.500 RT
STA 7+506.250 RT - 9M BACK
STA 7+639.500 RT - 3M BACK

VT STATE PLANE GRID

DUESO, HOWARD L. & PAMELA J. (28)

WRIGHT, GERALDINE S. & GADBOIS, PAULINE W. (70)

(FORMERLY) WRIGHT, GERALDINE S. (29)

FORSYTH, THOMAS IV. & BRENDA G. (27)

CURVE #27
Δ 08°02'11" LT
R 700.000 M
L 98.182 M
T 49.171 M
E 1.725 M
B 3.000%

STA 7+498.404 TO STA 7+501.944 LT
PERMANENT SEDIMENT TRAP
SEE DETAIL SHEET 162 OF 450

STA 7+420.000 TO STA 7+540.000 LT
NEW 200mm x 120M UNDERDRAIN
W/ FLUSHING BASIN AT STA 7+420.000 LT

STA 7+540.000 TO STA 7+636.000 LT
NEW 200mm x 96M UNDERDRAIN
W/ FLUSHING BASIN AT STA 7+636.000 LT

STA 7+608.912 TO STA 7+624.556 LT
REMOVE EXISTING 300mm ACCGMP

STA 7+636.000 TO STA 7+720.000 LT
NEW 200mm x 84M UNDERDRAIN

STA 7+533.6 ℄
REMOVE EXISTING 460mm ACCGMP

STA 7+663.6 ℄
REMOVE EXISTING 300mm ACCGMP

EXISTING 150mm PVC (REMAIN) PIPE TO BE MAINTAINED BY PROPERTY OWNER

STA 7+460.000 LT
NEW FLUSHING BASIN

STA 7+451.247 PC
STA 7+549.428 PT

N68°19'58"E 42.067

N60°17'46"E 74.904

PI 7+500.418 = 7+500.257

BM #20
BOLT IN ROOT OF 2-375 STUMP
US ELEV. 115.306M

STA 7+540 ℄
NEW 600mm x 17M CMAP 1.52mm OR PCCSP 1.63mm OR CPEP
WITH NEW DI AT INLET
STONE FILL TYPE II AT OUTLET (L-2.4M, D=0.6M, W=0.9M)

STA 7+636 ℄
NEW 600mm x 16M CMAP 1.52mm OR PCCSP 1.63mm OR CPEP
WITH NEW DI AT INLET
STONE FILL TYPE II AT OUTLET (L-2.4M, D=0.6M, W=0.9M)

SEE SHEET 684 OF 73
60 OF 450

SEE SHEET 684 OF 73
62 OF 450

MATCHLINE

0 10 20 30
SCALE IN METERS

○ DENOTES TREE OR STUMP REMOVAL

NOTES:
1. ALL SIDE ROAD RADII SHALL BE 11M UNLESS OTHERWISE NOTED. REFER TO STD B-12M
2. ALL DRIVE RADII SHALL BE 6M UNLESS OTHERWISE NOTED. REFER TO STD B-7IM

EXISTING R.O.W. CALCULATED POINT
N60°35'40"E 17.193 EXISTING R.O.W. DATA (TYPICAL)

LINES SHOWN ON THIS PLAN AS EXISTING PROPERTY LINES P/L ARE BELIEVED TO BE ACCURATE BUT SHOULD NOT BE RELIED UPON FOR PURPOSES UNRELATED TO THE STATE OF VERMONT'S ACQUISITION OF LAND AND RIGHTS FOR THIS PROJECT.

FOR R.O.W. USE ONLY

SEE LAYOUT SHEETS FOR CONSTRUCTION CHANGES

(R.O.W. AS BUILT)

PROJECT NAME: HIGHGATE-FRANKLIN ~~(AS BUILT)~~
PROJECT NUMBER: STP RS 0301(I) SA

FILE NAME: NAME$DGN
PROJECT LEADER: DELLASANTA
DESIGNED BY: SQUAD B
ROW LAYOUT SHEET ~~20A OF 26~~ 67 OF 73

PLOT DATE: 12-FEB-2014 11:47
DRAWN BY: ~~N. GARBACIK~~ ROW
CHECKED BY: H. PETROVS
SHEET 61 ~~67A~~ OF ~~73~~ 450

CONSTRUCT DRIVE
STA 7+749.000 RT GRAVEL
STA 7+827.000 LT GRAVEL

MANUFACTURED TERMINAL SECTION (TANGENTIAL)
STA 7+763.682 TO STA 7+778.896 RT

STEEL BEAM GUARDRAIL
STA 7+778.896 TO STA 8+040.000 RT

CONSTRUCT SPECIAL DITCH
STA 7+720.000 TO STA 7+747.000 LT
STA 7+751.000 TO STA 7+910.000 LT
STA 7+950.000 TO STA 8+030.000 LT
STA 7+950.000 TO STA 7+810.020 RT

GRUBBING MATERIAL
STA 7+720.000 TO STA 7+732.786 RT
STA 8+810.020 TO STA 8+040.000 RT

REMOVING AND RESETTING FENCE
STA 7+815.817 RT - 6M BACK

RELOCATE MAIL BOX, SINGLE SUPPORT
STA 7+830.370 RT TO STA 7+832.088 LT

REMOVAL OF EXISTING FENCE
STA 8+013.200 TO STA 8+033.200 LT

EROSION MATTING (JUTE)
STA 7+720.000 TO STA 7+732.786 RT
STA 8+810.020 TO STA 8+040.000 RT

STONE FILL, TYPE II
STA 7+720.000 TO STA 7+732.786 RT
STA 8+810.020 TO STA 8+040.000 RT

VAOT Metric

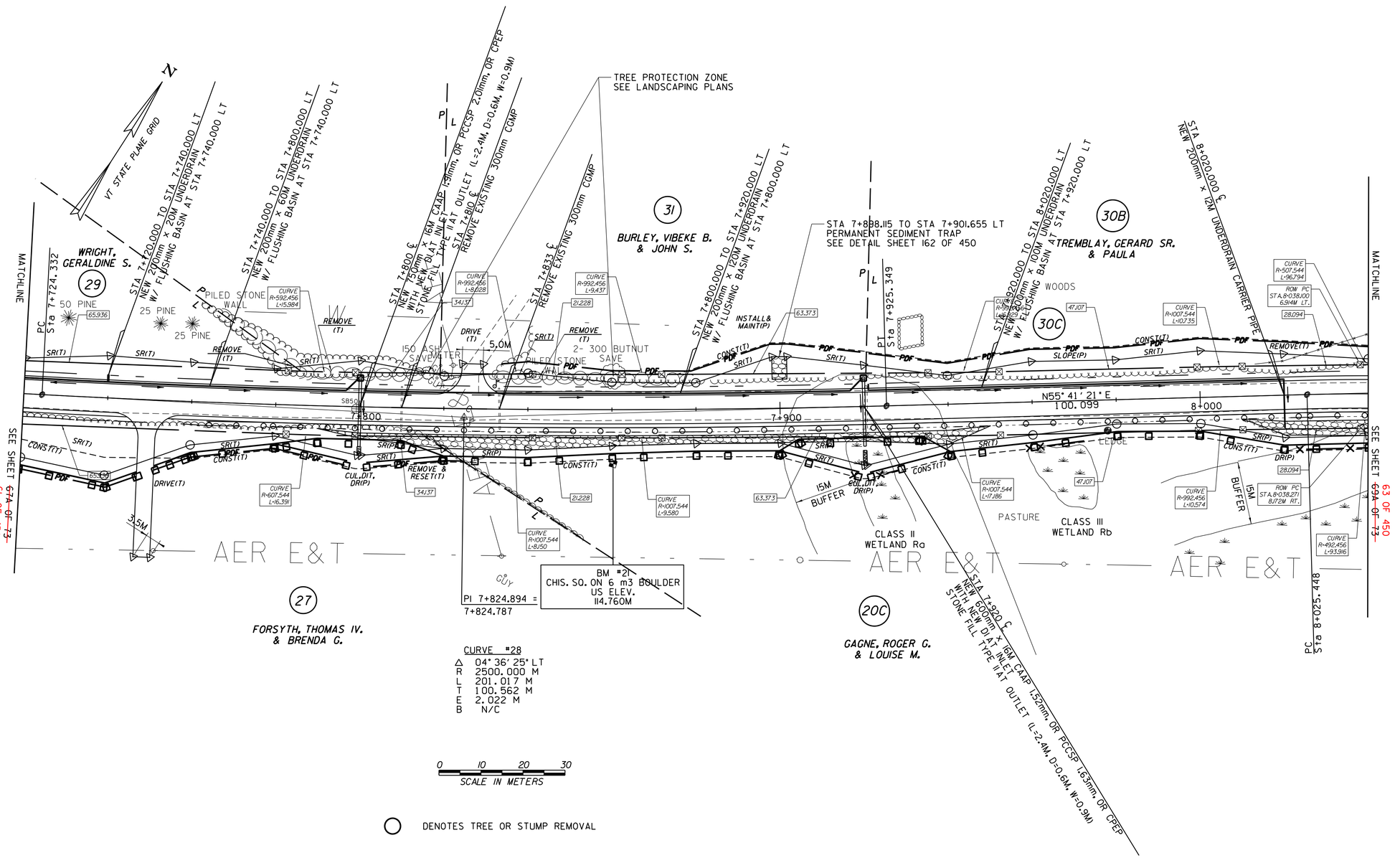

CURVE #28
△ 04° 36' 25" LT
R 2500.000 M
L 201.017 M
T 100.562 M
E 2.022 M
B N/C

0 10 20 30
SCALE IN METERS

○ DENOTES TREE OR STUMP REMOVAL

LINES SHOWN ON THIS PLAN AS EXISTING PROPERTY LINES P/L ARE BELIEVED TO BE ACCURATE BUT SHOULD NOT BE RELIED UPON FOR PURPOSES UNRELATED TO THE STATE OF VERMONT'S ACQUISITION OF LAND AND RIGHTS FOR THIS PROJECT.

FOR R.O.W. USE ONLY

NOTES:
1. ALL SIDE ROAD RADII SHALL BE 11M UNLESS OTHERWISE NOTED. REFER TO STD B-12M
2. ALL DRIVE RADII SHALL BE 6M UNLESS OTHERWISE NOTED. REFER TO STD B-7IM

SEE LAYOUT SHEETS FOR CONSTRUCTION CHANGES

(R.O.W. AS BUILT)

PROJECT NAME: HIGHGATE-FRANKLIN ~~(AS BUILT)~~
PROJECT NUMBER: STP RS 0301(I) SA

FILE NAME: NAME$DGN
PROJECT LEADER: DELLASANTA
DESIGNED BY: SQUAD B
ROW LAYOUT SHEET ~~21A OF 26~~ 68 OF 73

PLOT DATE: 12-FEB-2014 11:47
DRAWN BY: ~~N. GARBACIK~~ ROW
CHECKED BY: H. PETROVS
SHEET 62 ~~68A~~ OF ~~73~~ 450

CONSTRUCT DRIVE
STA 8+060.000 LT GRAVEL
STA 8+118.000 LT GRAVEL
REV 8+309.000 LT GRAVEL

STONE FILL, TYPE II
STA 8+040.000 TO REV STA 8+339.720 RT

CONSTRUCT SPECIAL DITCH
STA 8+065.000 TO STA 8+080.000 LT
STA 8+180.000 TO STA 8+220.000 LT
REV STA 8+316.000 TO REV STA 8+357.000 LT

GRUBBING MATERIAL
STA 8+040.000 TO REV STA 8+339.720 RT

EROSION MATTING (JUTE)
STA 8+040.000 TO REV STA 8+339.720 RT

STEEL BEAM GUARDRAIL
STA 8+040.000 TO REV STA 8+339.720 RT

RELOCATE MAIL BOX, SINGLE SUPPORT
STA 8+118.000 RT TO 8+121.4282 LT
REV STA 8+309.890 RT TO REV STA 8+318.910 LT

N
VT STATE PLANE GRID

Metric

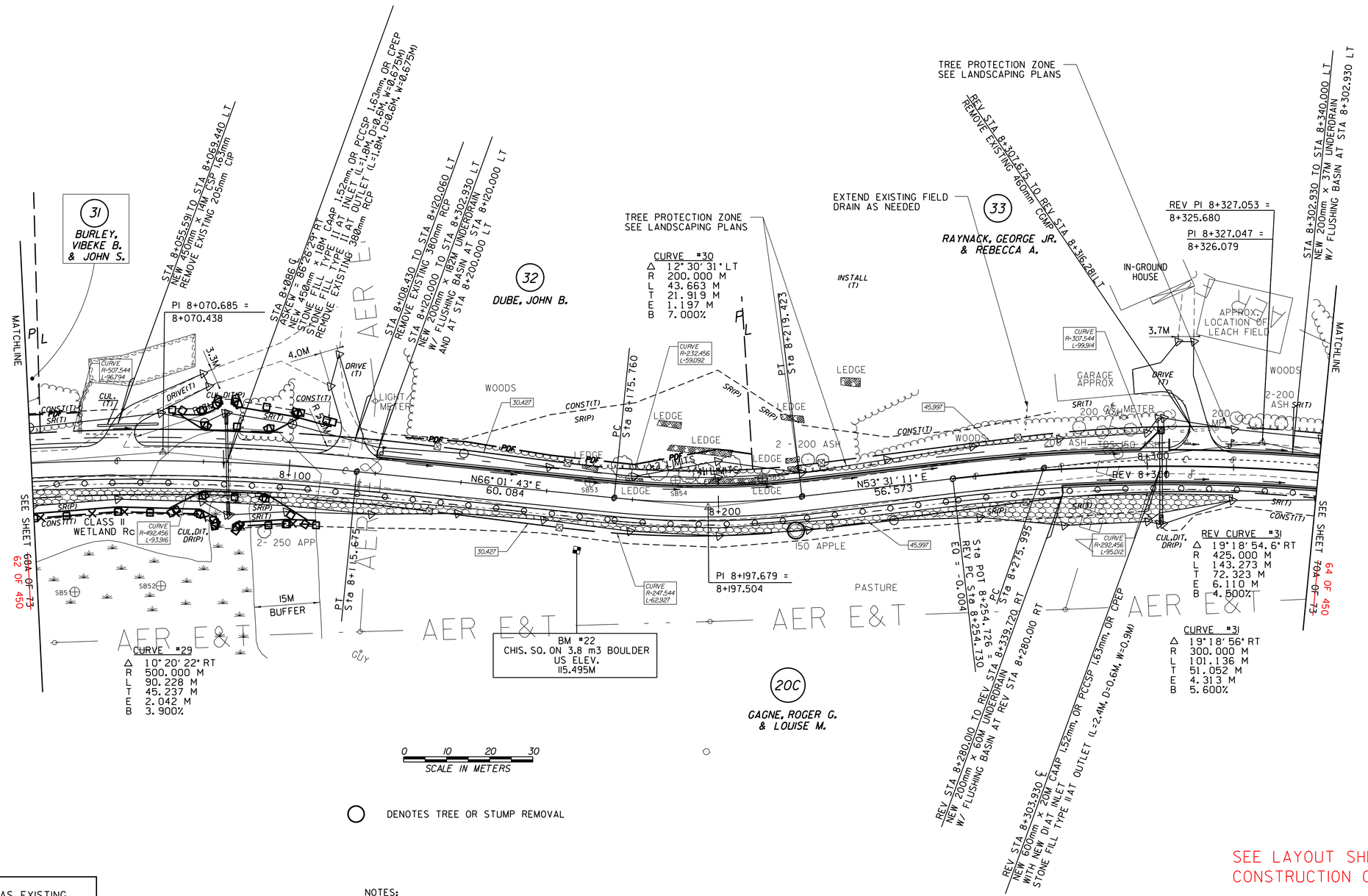

0 10 20 30
SCALE IN METERS

○ DENOTES TREE OR STUMP REMOVAL

LINES SHOWN ON THIS PLAN AS EXISTING PROPERTY LINES P/L ARE BELIEVED TO BE ACCURATE BUT SHOULD NOT BE RELIED UPON FOR PURPOSES UNRELATED TO THE STATE OF VERMONT'S ACQUISITION OF LAND AND RIGHTS FOR THIS PROJECT.

FOR R.O.W. USE ONLY

NOTES:
1. ALL SIDE ROAD RADII SHALL BE 11M UNLESS OTHERWISE NOTED. REFER TO STD B-12M
2. ALL DRIVE RADII SHALL BE 6M UNLESS OTHERWISE NOTED. REFER TO STD B-7IM

SEE LAYOUT SHEETS FOR CONSTRUCTION CHANGES

(R.O.W. AS BUILT)

PROJECT NAME: HIGHGATE-FRANKLIN ~~(AS BUILT)~~
PROJECT NUMBER: STP RS 0301(I) SA

FILE NAME: NAME$DGN
PROJECT LEADER: DELLASANTA
DESIGNED BY: SQUAD B
ROW LAYOUT SHEET ~~22A OF 26~~ 69 OF 73

PLOT DATE: 12-FEB-2014 11:47
DRAWN BY: ~~N. GARBACIK~~ ROW
CHECKED BY: H. PETROVS
SHEET 63 ~~69A~~ OF ~~73~~ 450

CONSTRUCT DRIVE
REV STA 8+352.570 LT GRAVEL
STA 8+412.000 LT GRAVEL
STA 8+585.000 RT GRAVEL
STA 8+587.000 LT GRAVEL
STA 8+626.000 RT GRAVEL

STEEL BEAM GUARDRAIL
REV STA 8+339.720 RT TO STA 8+460.696 RT

RELOCATE MAIL BOX, SINGLE SUPPORT
REV STA 8+346.340 RT TO REV STA 8+359.630 LT
STA 8+589.827 RT
STA 8+591.922 RT

MANUFACTURED TERMINAL SECTION (TANGENTIAL)
STA 8+460.696 TO STA 8+475.936 RT

REMOVING AND RESETTING FENCE
STA 8+479.000 LT - 2.5M BACK
STA 8+479.000 TO STA 8+578.640 LT
STA 8+578.640 LT - IM BACK

STONE FILL, TYPE II
REV STA 8+360.000 TO STA 8+470.000 RT

GRUBBING MATERIAL
REV STA 8+360.000 TO STA 8+470.000 RT

EROSION MATTING (JUTE)
REV STA 8+360.000 TO STA 8+470.000 RT

CONSTRUCT SPECIAL DITCH
REV STA 8+340.000 TO REVSTA 8+357.000 LT
REV STA 8+375.000 TO REV STA 8+408.000 LT
STA 8+510.000 TO STA 8+584.250 LT
STA 8+510.000 TO STA 8+582.500 RT

TREE PROTECTION ZONE
SEE LANDSCAPING PLANS

REV STA 8+378.270 TO REV STA 8+381.810 LT
PERMANENT SEDIMENT TRAP
SEE DETAIL SHEET 162 OF 450

33 RAYNACK, GEORGE JR. & REBECCA A.

34 DURKEE, PAUL M.

35 DANDURAND, MARC & ANN

35A

58A MAGNANT, THOMAS A. & NANCY S.

20C GAGNE, ROGER G. & LOUISE M.

REV STA 8+346.329 TO REV STA 8+360.996 LT
NEW 450mm x 15M CSP 1.63mm

REV STA 8+339.720 TO REV STA 8+371.600 LT
NEW 200mm x 32M UNDERDRAIN

STA 8+407.474 TO STA 8+420.658 LT
NEW 450mm x 14M CSP 1.63mm
REMOVE EXISTING 300mm CMP

STA 8+455.000 ℄
NEW 750mm x 24M CAAP 1.9mm, OR PCCSP 2.0mm, OR CPEP
STONE CRADLE HEADWALL AT INLET
REMOVE EXISTING TYPE II AT OUTLET
460mm CMP (L=2.4M, D=0.6M, W=0.9M)

BM #23
CHIS. SQ. ON LEDGE
US ELEV.
111.770M

PI 8+521.219 =
8+520.301

STA 8+480.000 TO STA 8+560.000 LT
NEW 200mm x 80M UNDERDRAIN
W/ FLUSHING BASIN AT STA 8+560.000 LT

STA 8+560.000 TO STA 8+640.000 LT
NEW 200mm x 80M UNDERDRAIN
W/ FLUSHING BASIN AT STA 8+560.000 LT

STA 8+480.000 ℄
200mm x 13M UNDERDRAIN CARRIER PIPE

STA 8+480.000 TO STA 8+580.000 RT
NEW 200mm x 100M UNDERDRAIN
W/ FLUSHING BASIN AT STA 8+580.000 RT

STA 8+580.000 TO STA 8+640.000 RT
NEW 200mm x 60M UNDERDRAIN
W/ FLUSHING BASIN AT STA 8+580.000 RT

STA 8+640.000 ℄
200mm x 14M UNDERDRAIN CARRIER PIPE

REV STA 8+339.720 TO REV STA 8+371.600 RT
NEW 200mm x 32M UNDERDRAIN

REV STA 8+371.600 ℄
NEW 200mm x 12M UNDERDRAIN CARRIER PIPE

REV PT STA 8+398.003 =
STA 8+398.400
EO = -0.397

CURVE #32
Δ 21° 41' 51" RT
R 200.000 M
L 75.739 M
T 38.328 M
E 3.640 M
B 7.000%

N72° 50' 08" E
105.759

S85° 28' 01" E
695.411

PC STA 8+482.828

PT STA 8+558.629

ROW PT STA 8+567.818 8.015M LT.

ROW PT STA 8+558.629 7.073M RT.

CURVE R-307.544 L-99.914
CURVE R-1007.544 L-36.014
CURVE R-992.456 L-35.475
CURVE R-292.456 L-95.012
CURVE R-242.456 L-88.898
CURVE R-257.544 L-94.430

ISWF HOUSE
GARAGE
HOUSE
FARMLAND
WOODS
WETLAND S CLASS II
375 ELM
SHED
LEDGE
CLAY
GUY
750 MPL SAVE
750 MPL 2-100 SAVE MP
SB56
SB57
SB58

REMOVE (T)
DRIVE (T) 2.6M
DRIVE (T) 3.2M
DRIVE (T) 5.5M
DRIVE (T) 4.5M
DRIVE (T)
INSTALL(T)
INSTALL&MAINT(P)
CONST(T)
SR(T)
CUL.(T)
CUL.DIT(P)
CUL.DRIP(P)
CUL.DRIP
REMOVE&RESET(T)
EXCEPT& RESERVE
5M BUFFER
15M BUFFER
4.0M
45.310
35.310
26.704
642.239
150 SQ. FT. SIGN

TREE PROTECTION ZONE
SEE LANDSCAPING PLANS

VT STATE PLANE GRID

MATCHLINE

SEE SHEET 64A OF 73
63 OF 450

SEE SHEET 65 OF 73
64 OF 450

0 10 20 30
SCALE IN METERS

○ DENOTES TREE OR STUMP REMOVAL

NOTES:
1. ALL SIDE ROAD RADII SHALL BE 11M UNLESS OTHERWISE NOTED. REFER TO STD B-12M
2. ALL DRIVE RADII SHALL BE 6M UNLESS OTHERWISE NOTED. REFER TO STD B-7.1M

EXISTING R.O.W. CALCULATED POINT
N68°35'40"E 17.193 EXISTING R.O.W. DATA (TYPICAL)

LINES SHOWN ON THIS PLAN AS EXISTING PROPERTY LINES P/L ARE BELIEVED TO BE ACCURATE BUT SHOULD NOT BE RELIED UPON FOR PURPOSES UNRELATED TO THE STATE OF VERMONT'S ACQUISITION OF LAND AND RIGHTS FOR THIS PROJECT.

FOR R.O.W. USE ONLY

SEE LAYOUT SHEETS FOR CONSTRUCTION CHANGES

(R.O.W. AS BUILT)

PROJECT NAME: HIGHGATE-FRANKLIN ~~(AS BUILT)~~
PROJECT NUMBER: STP RS 0301(I) SA

FILE NAME: NAME$DGN
PROJECT LEADER: DELLASANTA
DESIGNED BY: SQUAD B
ROW LAYOUT SHEET ~~23A OF 26~~ 70 OF 73

PLOT DATE: 12-FEB-2014 11:47
DRAWN BY: ~~N. GARBACIK~~ ROW
CHECKED BY: H. PETROVS
SHEET 64 ~~70A~~ OF ~~73~~ 450

CONSTRUCT DRIVE
STA 8+764.000 RT GRAVEL
STA 8+860.000 LT GRAVEL

STONE FILL, TYPE II
STA 8+885.143 TO STA 9+020.000 LT
STA 8+885.559 TO STA 9+020.000 RT

EROSION MATTING (JUTE)
STA 8+885.143 TO STA 9+020.000 LT
STA 8+885.559 TO STA 9+020.000 RT

GEOTEXTILE UNDER STONE FILL
STA 8+865.862 TO STA 9+020.000 LT

STEEL BEAM GUARDRAIL
STA 8+688.330 TO STA 8+761.548 RT
STA 8+706.935 TO STA 8+790.420 LT
STA 8+903.848 TO STA 9+020.000 RT
STA 8+900.047 TO STA 9+020.000 LT

GRUBBING MATERIAL
STA 8+885.143 TO STA 9+020.000 LT
STA 8+888.559 TO STA 9+020.000 RT

REMOVING AND RESETTING FENCE
STA 9+018.810 LT - 3M BACK
STA 9+018.810 TO STA 9+020.000 LT

MANUFACTURED TERMINAL SECTION (TANGENTIAL)
STA 8+884.807 TO STA 8+900.047 LT
STA 8+888.607 TO STA 8+903.848 RT

ANCHOR FOR STEEL BEAM RAIL
STA 8+688.330 RT
STA 8+706.935 LT
STA 8+761.548 RT
STA 8+790.420 LT

CONSTRUCT SPECIAL DITCH
STA 8+690.000 TO STA 8+750.000 RT
STA 8+710.000 TO STA 8+764.000 LT
STA 8+767.000 TO STA 8+790.000 RT

N
VT STATE PLANE GRID

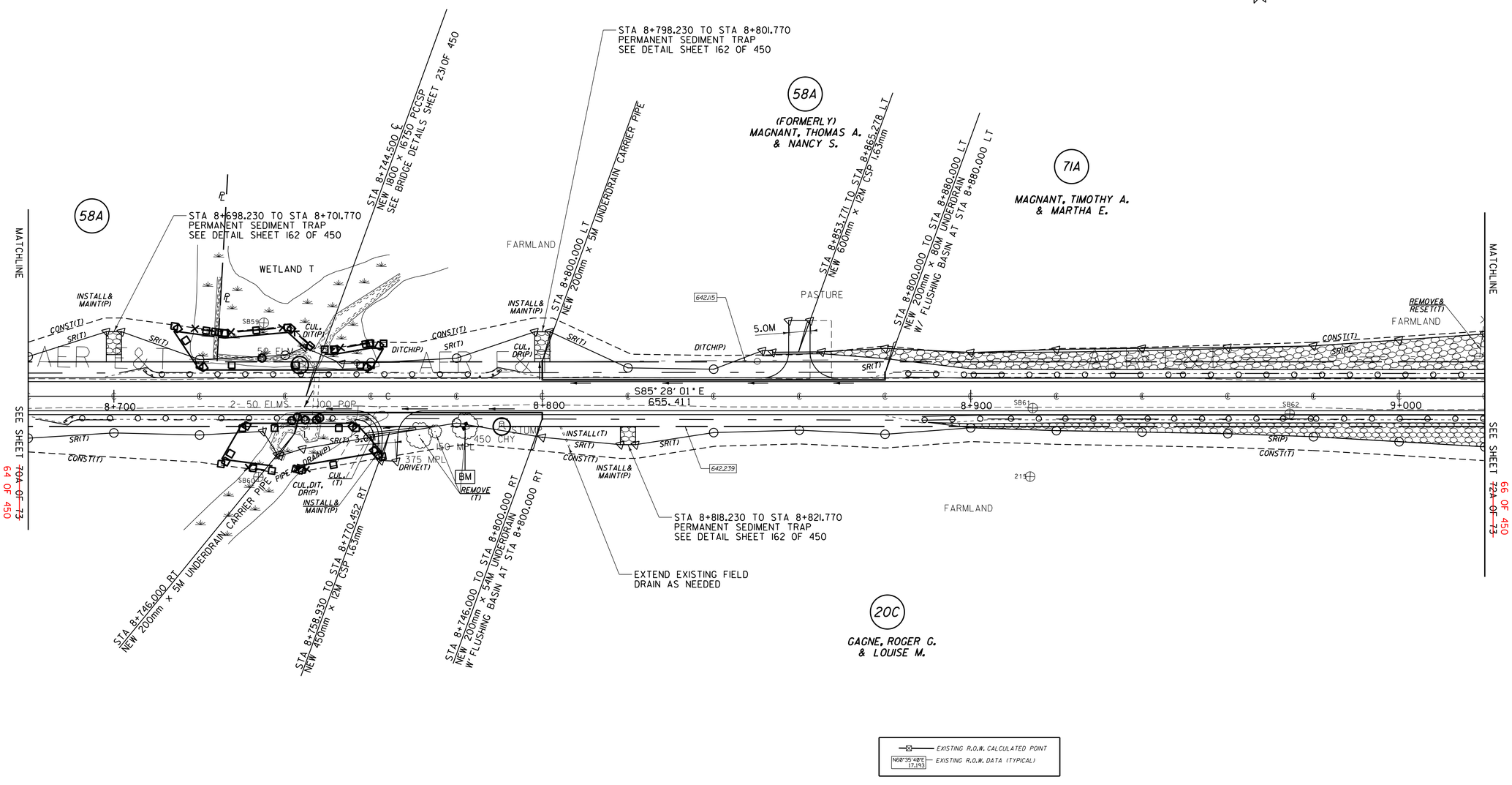

EXISTING R.O.W. CALCULATED POINT
N60°35'40"E 17.193 EXISTING R.O.W. DATA (TYPICAL)

0 10 20 30
SCALE IN METERS

○ DENOTES TREE OR STUMP REMOVAL

NOTES:
1. ALL SIDE ROAD RADII SHALL BE 11M UNLESS OTHERWISE NOTED. REFER TO STD B-12M
2. ALL DRIVE RADII SHALL BE 6M UNLESS OTHERWISE NOTED. REFER TO STD B-7M

LINES SHOWN ON THIS PLAN AS EXISTING PROPERTY LINES P/L ARE BELIEVED TO BE ACCURATE BUT SHOULD NOT BE RELIED UPON FOR PURPOSES UNRELATED TO THE STATE OF VERMONT'S ACQUISITION OF LAND AND RIGHTS FOR THIS PROJECT.

FOR R.O.W. USE ONLY

SEE LAYOUT SHEETS FOR CONSTRUCTION CHANGES

(R.O.W. AS BUILT)

PROJECT NAME: HIGHGATE-FRANKLIN ~~(AS BUILT)~~
PROJECT NUMBER: STP RS 0301(I) SA

FILE NAME: NAME$DGN
PROJECT LEADER: DELLASANTA
DESIGNED BY: SQUAD B
ROW LAYOUT SHEET ~~24A OF 26~~ 71 OF 73

PLOT DATE: 12-FEB-2014 11:47
DRAWN BY: ~~N. GARBACIK~~ ROW
CHECKED BY: H. PETROVS
SHEET 65 ~~71A~~ OF ~~73~~ 450

STEEL BEAM GUARDRAIL
STA 9+020.000 TO STA 9+120.048 RT
STA 9+020.000 TO STA 9+176.885 LT

GRUBBING MATERIAL
STA 9+020.000 TO STA 9+192.062 LT
STA 9+020.000 TO STA 9+135.285 RT

EROSION MATTING (JUTE)
STA 9+020.000 TO STA 9+192.062 LT
STA 9+020.000 TO STA 9+135.285 RT

GEOTEXTILE UNDER STONE FILL
STA 9+020.000 TO STA 9+220.000 LT

MANUFACTURED TERMINAL SECTION (TANGENTIAL)
STA 9+120.048 TO STA 9+135.285 RT
STA 9+176.885 TO STA 9+192.062 LT

STONE FILL, TYPE II
STA 9+020.000 TO STA 9+192.062 LT
STA 9+020.000 TO STA 9+135.285 RT

CONSTRUCT SPECIAL DITCH
STA 24+005.000 TO STA 24+043.000 RT
STA 9+215.000 TO STA 9+246.000 RT
STA 25+005.000 TO STA 25+034.500 LT
STA 25+005.000 TO STA 25+025.000 RT
STA 9+256.000 TO STA 14+680.000 RT

VERTICAL GRANITE CURB
STA 9+268.614 TO ah STA 14+665.216 LT

REMOVING AND RESETTING FENCE
STA 9+020.000 TO STA 9+248.540 LT
STA 9+248.540 LT - 4.6M BACK
STA 9+263.493 TO STA ah 14+680.000 RT
STA ah 14+663.080 LT - 4M BACK
STA ah 14+676.230 LT - 3.6M BACK
STA ah 14+663.080 TO STA ah 14+680.000 LT

PORTLAND CEMENT CONCRETE SIDEWALK, 125MM
STA 9+295.598 LT (8M BACK)

CONSTRUCT DRIVE
STA 9+263.000 LT GRAVEL
STA ah 14+670.000 LT GRAVEL

VERTICAL GRANITE CURB
TREE PROTECTION ZONE
SEE LANDSCAPING PLANS
TH #3 CONST. L P.O.T. 9+254.100 =
TH #21 P.O.T. 25+000.000
TH #3 CONST. L P.O.T. 9+209.030 =
TH #37 P.O.T. 24+000.000
STA 9+250 ℄ ASKEW = 30°53'21" LT NEW 750mm x 41M CAAP 1.91mm OR PCCSP 1.63mm, OR RCPCP CLASS III OR CPEP WITH NEW 1.2M x 1.8M DI AT INLET NEW CONCRETE HEADWALL AT OUTLET STONE FILL TYPE II AT OUTLET (L=3.0M, D=0.6M, W=1.125M)
STA 9+267.634 ℄ ASKEW = 54°47'34" LT NEW 450mm x 14M CAAP 1.52mm OR RCCSP 1.63mm, OR RCPCP CLASS III OR CPEP WITH NEW 1.2M x 1.2M DI AT INLET
STA 9+200.000 TO STA 9+258.000 LT NEW 200mm x 58M UNDERDRAIN AT STA 9+258.000
STA 9+200.000 ℄ NEW 200mm x 8M UNDERDRAIN CARRIER PIPE W/ FLUSHING BASIN
STA 9+220.000 ℄ NEW 200mm x 6M UNDERDRAIN CARRIER PIPE
STA 9+246 REMOVE EXISTING 610mm CMP
STA 9+220.000 TO STA ah 14+680.000 RT NEW 200mm x ITM UNDERDRAIN W/ FLUSHING BASIN AT STA ah 14+660.000
POE STA 9+306.288 POB STA 9+10 ah 14+650.000 EO = -5543.712
CURVE #33 Δ 43°31'06" LT, R 40.000 M, L 30.381 M, T 15.966 M, E 3.069 M, B 8.000%
CURVE R=42.458 L=32.201
CURVE R=107.544 L=20.663
CURVE R=39.456 L=31.158
ROM PC STA 9+209.79 7.97M LT.
ROM/ROM STA 9+265.017 7.12M RT.
ROM ANGLE PT. TH#2 STA 25+029.696 7.54M LT.
ROM P.O.T. TH#2 STA 25+040.000 7.337M LT.
ROM P.O.T. TH#2 STA 25+040.000 7.753M RT.
ROM P.O.T. TH37 STA 24+060.000 7.405M RT.
ROM P.O.T. TH37 STA 24+060.000 7.685M LT.
PI 25+012.750 = 25+012.628
PI 9+230.006 = 9+228.456
PI 24+018.685 = 24+018.235
STA 25+004.30 BEGIN SIDELINE CONSTRUCTION
STA 24+004.300 BEGIN SIDELINE CONSTRUCTION
END PAVED APPROX STA 25+019.208
TH #37 CONST. L P.O.T. 24+045.535 END SIDELINE CONSTRUCTION CONSTRUCT SATISFACTORY APPROACH
TH #21 CONST. L P.O.T. 25+038.840 END SIDELINE CONSTRUCTION CONSTRUCT SATISFACTORY APPROACH
TH #37 CURVE #1 Δ 41°45'16" RT, R 13.200 M, L 9.620 M, T 5.035 M, E 0.928 M
TH #21 CURVE #1 Δ 22°07'02" RT, R 25.000 M, L 9.650 M, T 4.886 M, E 0.473 M
END PAVED APPROX STA 24+026.610
TIE LINE 16.408
TIE LINE 15.080
TIE LINE 6.000
TIE LINE 10.000
TIE LINE 30.185
TIE LINE 10.305
TIE LINE 30.005
TIE LINE 20.145
TIE LINE 30.000
TIE LINE 30.000
TIE LINE 30.000

CONSTRUCT DRIVE
STA ah 14+806.000 LT GRAVEL
STA ah 14+850.000 RT GRAVEL
STA ah 14+895.000 LT GRAVEL
STA ah 14+895.000 RT GRAVEL
STA ah 14+925.000 LT GRAVEL
STA ah 14+927.000 RT GRAVEL
STA ah 15+014.000 RT GRAVEL
STA ah 15+028.000 LT GRAVEL

REMOVING AND RESETTING FENCE
STA ah 14+680.000 TO STA ah 14+795.270 LT
STA ah 14+816.260 TO STA ah 14+883.450 LT
STA ah 14+680.000 TO STA ah 14+760.000 RT
STA ah 14+755.440 LT - 6.1M BACK
STA ah 14+850.230 RT - 2M BACK
STA ah 14+854.190 LT - 6.9M BACK
STA ah 14+855.100 RT - 1.5M BACK

VERTICAL GRANITE CURB
STA ah 14+852.568 TO STA ah 14+892.611 RT
STA ah 14+898.500 TO STA ah 14+923.630 RT
STA ah 14+929.250 TO STA ah 15+012.750 RT
STA ah 14+951.554 TO STA ah 15+021.110 LT
STA ah 15+016.130 TO STA ah 15+034.000 RT

HYDRANT, RELOCATE
STA ah 14+880.720 RT - MOVE 9.780M BACK FROM ℄

REMOVING AND RESETTING FENCE (MOD)
STA ah 14+957.000 TO STA ah 15+011.000 RT

CONSTRUCT SPECIAL DITCH
STA ah 14+680.000 TO STA ah 14+845.000 RT

VAOT Metric

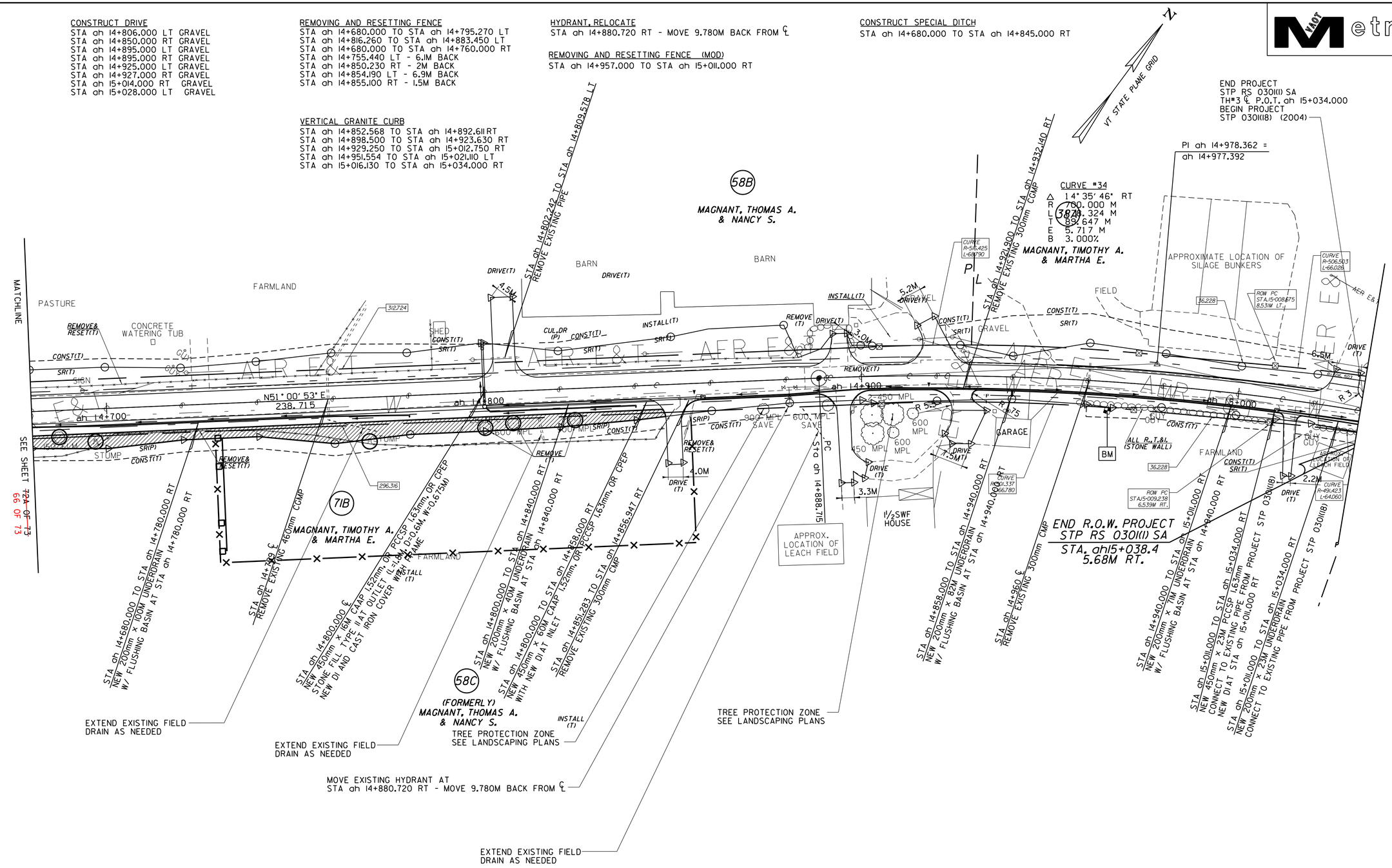

LINES SHOWN ON THIS PLAN AS EXISTING PROPERTY LINES P/L ARE BELIEVED TO BE ACCURATE BUT SHOULD NOT BE RELIED UPON FOR PURPOSES UNRELATED TO THE STATE OF VERMONT'S ACQUISITION OF LAND AND RIGHTS FOR THIS PROJECT.

FOR R.O.W. USE ONLY

0 10 20 30
SCALE IN METERS

○ DENOTES TREE OR STUMP REMOVAL

NOTES;
1. ALL SIDE ROAD RADII SHALL BE 11M UNLESS OTHERWISE NOTED. REFER TO STD B-12M
2. ALL DRIVE RADII SHALL BE 6M UNLESS OTHERWISE NOTED. REFER TO STD B-7IM

⊠——— EXISTING R.O.W. CALCULATED POINT
N68°35'40"E 17.193 EXISTING R.O.W. DATA (TYPICAL)

SEE LAYOUT SHEETS FOR CONSTRUCTION CHANGES

(R.O.W. AS BUILT)

PROJECT NAME: HIGHGATE-FRANKLIN ~~(AS BUILT)~~
PROJECT NUMBER: STP RS 0301(I) SA

FILE NAME: NAME$DGN
PROJECT LEADER: DELLASANTA
DESIGNED BY: SQUAD B
ROW LAYOUT SHEET ~~26A OF 26~~ 73 OF 73

PLOT DATE: 12-FEB-2014 11:47
DRAWN BY: ~~N. GARBACIK~~ ROW
CHECKED BY: H. PETROVS
SHEET 67 ~~73A~~ OF ~~73~~ 450

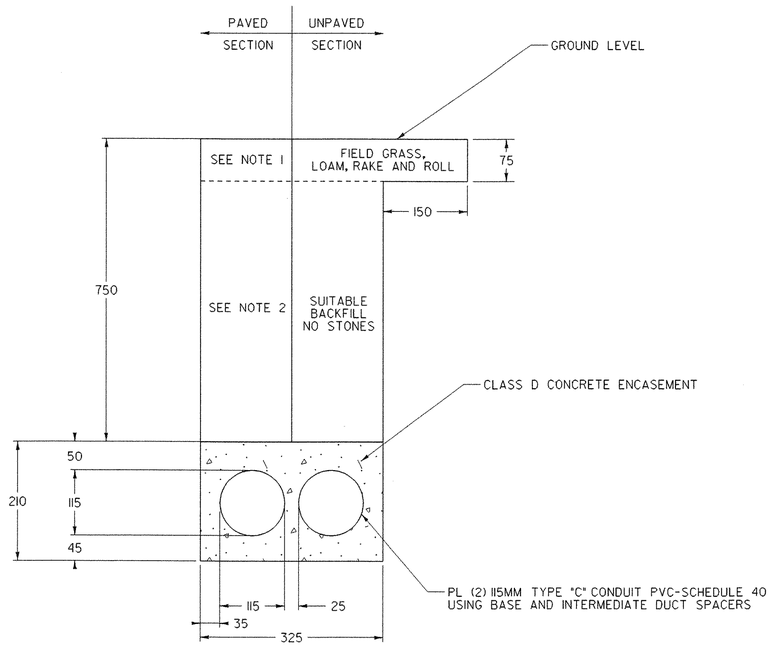

SLEEVES FOR UTILITIES (115 mm DIAMETER)(MOD)
(FOR REVISED PROPOSED UNDERGROUND UTILITIES)

NOTES:

1. SEE ROADWAY TYPICAL FOR PAVEMENT TYPES AND THICKNESS.
2. SEE ROADWAY TYPICAL FOR SUBBASE AND SAND THICKNESS.

ALL DIMENSIONS IN mm UNLESS OTHERWISE NOTED.

PROJECT NAME:	HIGHGATE - FRANKLIN
PROJECT NUMBER:	STP RS 0301(1) SA
FILE NAME: ...85c060/design/dc060dtl.dgn	PLOT DATE: 09-MAY-2005
PROJECT LEADER: DELLASANTA	DRAWN BY: SQUAD B
DESIGNED BY: SQUAD B	CHECKED BY: SQUAD B
IPARM FILE NAME: dc060dtm.i	SHEET 68 OF 450

CONTROL POINTS

HVCTRL # 635

STANDARD DISK STAMPED
W 48
N = 271970.351
E = 459286.783
ELEV. = 96.951

Benchmark Disk set in rock outcrop

Described by National Geodetic Survey 1978
1.6 mi NE from Highgate Center
1.6 mi east along state highway 78 from the Post Office at Highgate Center, at the junction of a road leading east, at a place called Beaulieus corner, 43 ft south of the center line of highway and the road, 46 ft southeast of power pole 139n 104, 12.2 ft southwest of a northwest-southeast fence line, on the inside of a curve

BM # 25

STANDARD DISK STAMPED
P 10
N = 275787.826
E = 467202.849
ELEV. = 138.054

Survey Disk in the top of Granite Cap on Banister

General Location, Franklin, VT.
At the front entrance to Haston Library, on south side of steps, in top of granite cap on banister.

* DESCRIPTION PROVIDED BY VERMONT AGENCY OF TRANSPORTATION GEODETIC SURVEY UNIT

TRAVERSE TIES

HVCTRL #634
N = 272024.6572
E = 459420.1316
Z = 102.430

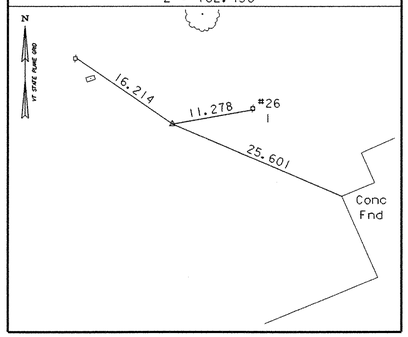

HVCTRL #610
N = 272593.1629
E = 460063.7217
Z = 88.025

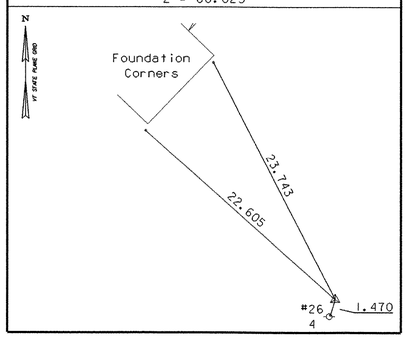

HVCTRL #611
N = 272912.3795
E = 460570.2041
Z = 81.621

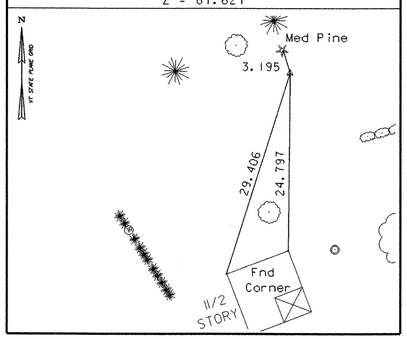

HVCTRL #612
N = 273136.3748
E = 460972.4096
Z = 81.736

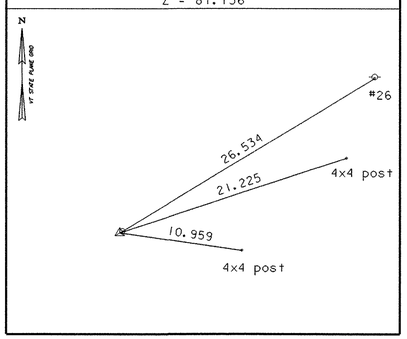

HVCTRL #613
N = 273604.1301
E = 461636.1373
Z = 81.577

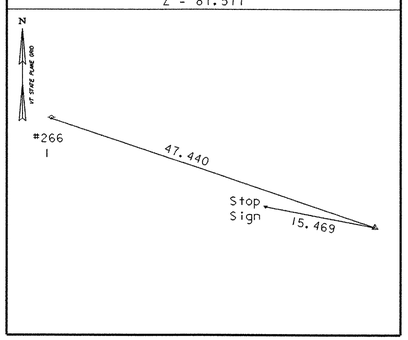

TRAVERSE TIES

HVCTRL #614
N = 273928.7073
E = 461979.8227
Z = 89.559

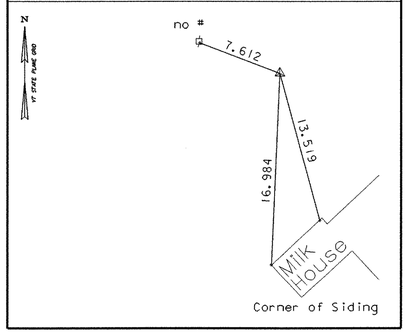

HVCTRL #636
N = 274203.5753
E = 462325.5483
Z = 84.327

NOT TIED

HVCTRL #637
N = 274357.2619
E = 463031.3360
Z = 99.611

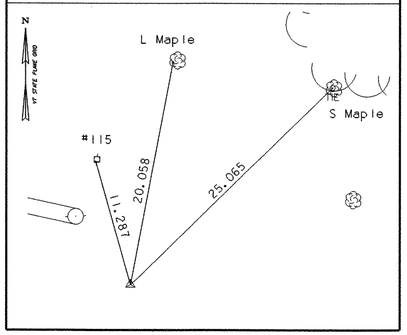

HVCTRL #638
N = 274348.9755
E = 463087.1047
Z = 99.119

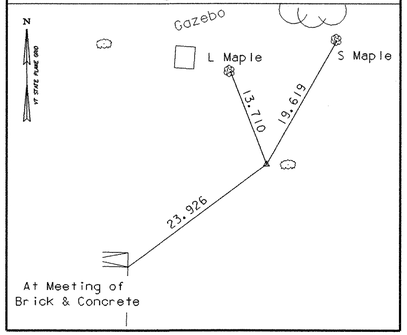

HVCTRL #618
N = 274390.3837
E = 463535.7529
Z = 99.409

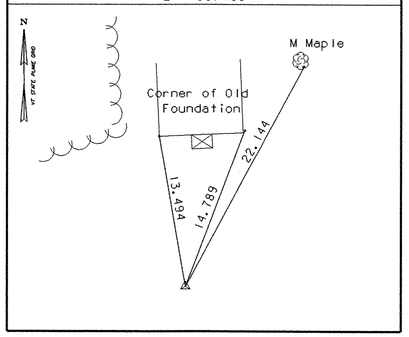

DATUM
VERTICAL NAVD 29
HORIZONTAL ASSUMED
ADJUSTMENT Compass

* MAIN TRAVERSE COMPLETED NOVEMBER 2002 BY R.GILMAN & P.WINTERS

ALL TIE DISTANCES ARE IN METERS

PROJECT NAME: Highgate - Franklin
PROJECT NUMBER: STP RS 0301(1)sa

FILE NAME: 85c060/Survey/xc060ti.dgn
PROJECT LEADER:
DESIGNED BY:
PLOT DATE: 09-MAY-2005
DRAWN BY: R. Bullock
CHECKED BY:
SHEET 79 OF 450

VAOT Metric

TRAVERSE TIES

HVCTRL #619
N = 274416.5199
E = 464128.7348
Z = 97.359

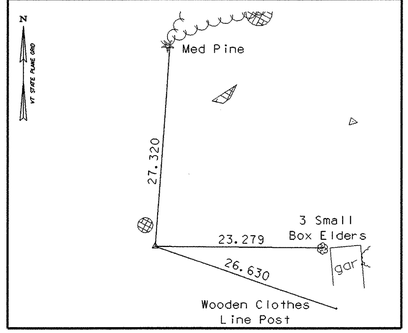

HVCTRL #620
N = 274574.1671
E = 464323.4826
Z = 109.792

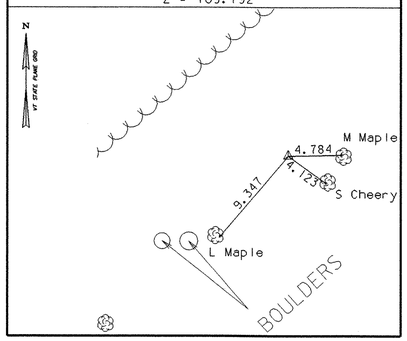

HVCTRL #621
N = 274727.9132
E = 464470.1134
Z = 114.235

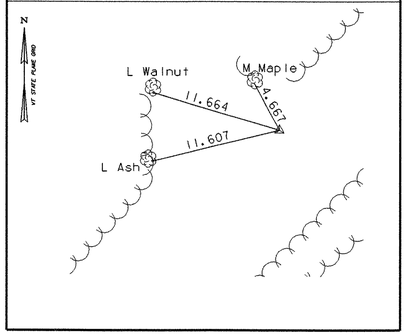

HVCTRL #622
N = 274898.4630
E = 464702.4495
Z = 114.653

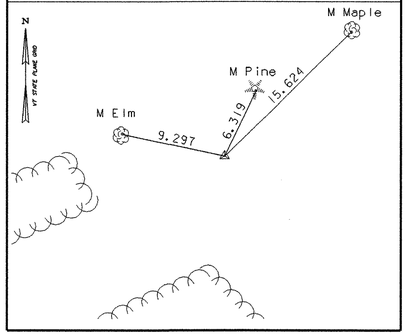

HVCTRL #623
N = 274927.5533
E = 464798.6295
Z = 116.769

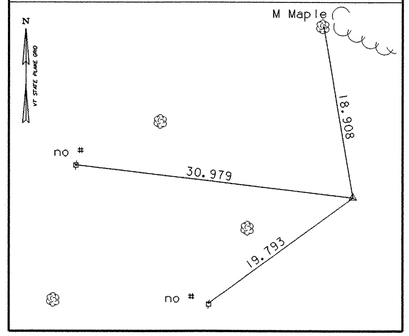

TRAVERSE TIES

HVCTRL #624
N = 275149.1461
E = 465186.6921
Z = 115.7410

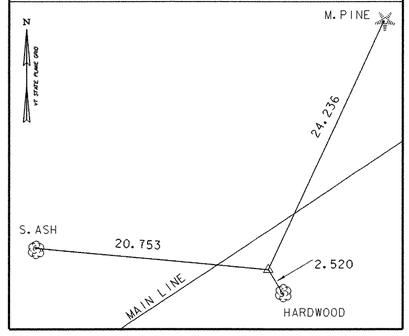

HVCTRL #625
N = 275273.7538
E = 465393.1444
Z = 116.0420

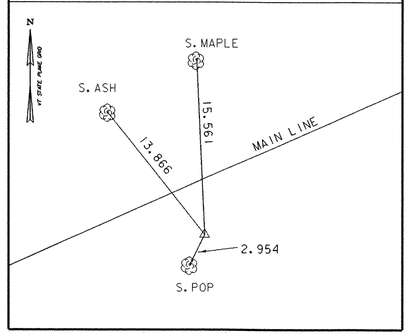

HVCTRL #626
N = 275393.0348
E = 465579.7815
Z = 112.296

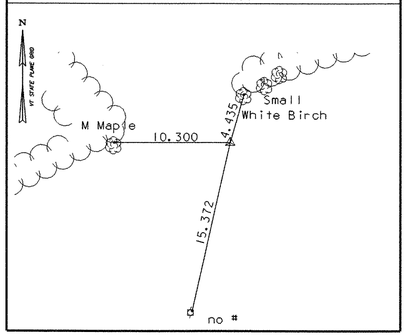

HVCTRL #627
N = 275439.9407
E = 465771.9626
Z = 112.1640

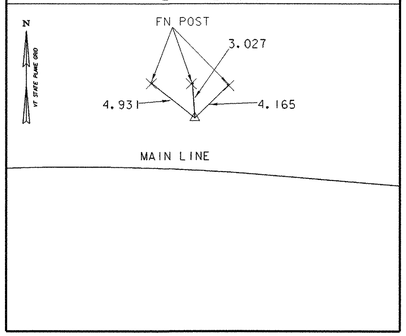

HVCTRL #628
N = 275373.4453
E = 466426.3413
Z = 135.570

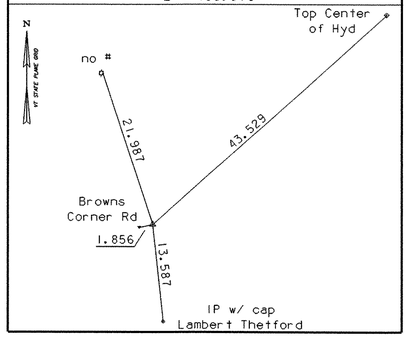

TRAVERSE TIES

HVCTRL #629
N = 275583.4210
E = 466687.5727
Z = 142.666

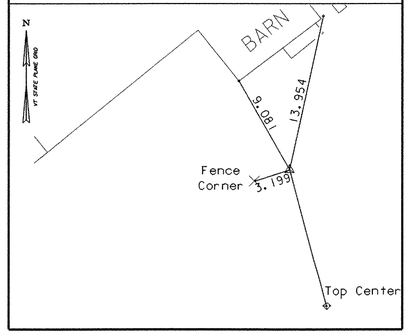

HVCTRL #630
N = 275686.1788
E = 466855.9729
Z = 141.039

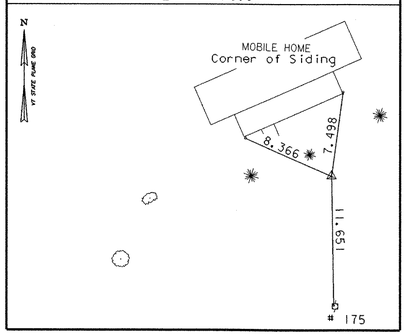

HVCTRL #631
N = 275769.1497
E = 467045.4044
Z = 132.665

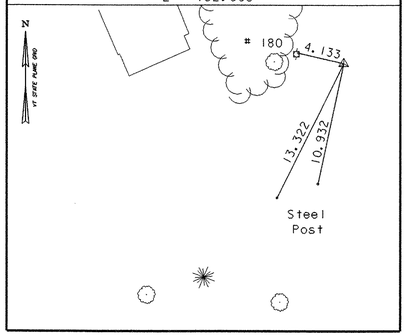

HVCTRL #633
N = 275815.9212
E = 467195.2332
Z = 136.450

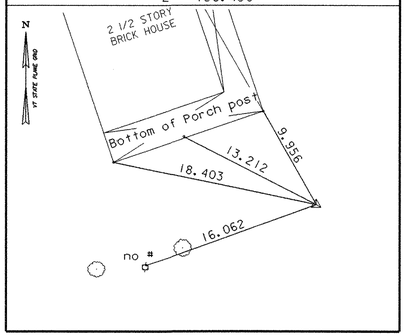

HVCTRL #615
N = 274191.8893
E = 462295.5111
Z = 86.2460

NOT TIED

DATUM
VERTICAL NAVD 29
HORIZONTAL ASSUMED
ADJUSTMENT Compass

* MAIN TRAVERSE COMPLETED NOVEMBER 2002 BY R.GILMAN & P.WINTERS

ALL TIE DISTANCES ARE IN METERS

PROJECT NAME: Highgate - Franklin
PROJECT NUMBER: STP RS 0301(1)SA

FILE NAME: 85c060/Survey/xc060tl.dgn
PROJECT LEADER:
DESIGNED BY:
PLOT DATE: 09-MAY-2005
DRAWN BY: R. Bullock
CHECKED BY:
SHEET 80 OF 450

TRAVERSE TIES

HVCTRL #616
N = 274331.7444
E = 462616.4459
Z = 81.5610

NOT TIED

HVCTRL #617
N = 274348.5443
E = 463024.0381
Z = 99.4110

NOT TIED

* MAIN TRAVERSE COMPLETED NOVEMBER 2002 BY R.GILMAN & P.WINTERS

Point	Station	Northing	Easting	Elev:
3700	POT 1+000.000	271962.758	459350.512	96.951
3701	PC 1+006.896	271968.931	459353.586	
3702	PT 1+063.202	272010.380	459390.695	
3703	PC 1+166.800	272066.501	459477.776	
3704	PT 1+256.784	272123.214	459547.399	
3705	PC 1+365.631	272200.890	459623.650	
3706	PT 1+457.753	272264.057	459690.673	
3707	PC 1+623.817	272373.170	459815.858	
3708	PT 1+903.149	272561.435	460022.182	
3709	PC 2+083.818	272686.217	460152.837	
3710	PT 2+171.243	272739.276	460222.103	
3711	PC 2+351.209	272832.564	460376.003	
3712	PT 2+438.026	272868.683	460454.740	
3713	PC 2+549.933	272903.382	460561.132	
3714	PT 2+581.989	272913.808	460591.444	
3715	PC 2+688.335	272950.005	460691.440	
3716	PT 2+820.217	273013.554	460806.377	

Metric

Mainline
Coordinates good as of:
01/23/03

Point	Station	Northing	Easting
3717	PC 3+050.523	273155.272	460987.918
3718	PT 3+146.519	273207.719	461068.185
3719	PC 3+287.632	273274.715	461192.380
3720	PT 3+358.757	273307.163	461255.666
3721	PC 3+408.965	273329.129	461300.814
3722	PT 3+535.263	273399.949	461404.855
3723	PC 4+182.888	273837.824	461882.017
3724	PT 4+236.560	273873.035	461922.516
3725	PC 4+249.907	273881.519	461932.820
3726	PT 4+317.585	273926.271	461983.572
3727	PC 4+399.172	273982.270	462042.906
3728	PT 4+491.583	274042.506	462112.945
3729	PC 4+872.051	274277.003	462412.556
3731	PT 4+989.571	274318.923	462520.542
3732	PC 5+393.412	274349.779	462923.202
3733	PT 5+459.644	274352.650	462989.360
3734	PC 5+538.375	274353.456	463068.086
3735	PT 5+547.759	274353.907	463077.457
3736	PC 5+660.794	274363.603	463190.076
3737	PCC 5+722.933	274368.384	463252.030

Point	Station	Northing	Easting
3738	PT 5+876.559	274378.079	463405.349
3739	PC 5+981.933	274384.206	463510.545
3740	PT 6+016.666	274386.426	463545.206
3741	PC 6+140.633	274395.067	463668.871
3742	PT 6+288.418	274404.156	463816.376
3743	PC 6+561.055	274418.690	464088.625
3744	PT 6+640.000	274446.701	464161.035
3745	PC 6+836.052	274570.721	464312.875
3746	PT 6+942.505	274642.318	464391.585
3747	PC 7+047.888	274717.277	464465.659
3748	PT 7+199.129 BK	274816.684	464579.462
EQ	POT 7+199.062 AH	274816.684	464579.462
3750	PC 7+228.049	274834.102	464602.632
3751	PT 7+337.762	274889.917	464696.831
3752	PC 7+366.861	274901.920	464723.339
3753	PT 7+409.179	274918.464	464762.285
3754	PC 7+451.247	274933.996	464801.380
3755	PT 7+549.428	274976.517	464889.787
3756	PC 7+724.332	275063.185	465041.708
3757	PT 7+925.349	275169.701	465212.120

Point	Station	Northing	Easting
3758	PC 8+025.448	275226.125	465294.801
3759	PT 8+115.675	275270.003	465373.501
3760	PC 8+175.759	275294.414	465428.402
3761	PT 8+219.422	275316.351	465466.055
REV	POT 8+254.726 BK	275337.339	465494.441
EQ	PC 8+254.730 AH	275337.339	465494.441
REV	PT 8+398.003 BK	275401.681	465621.695
EQ	PT 8+398.400 AH	275401.681	465621.695
3764	PC 8+482.890	275426.616	465702.420
3765	PT 8+558.629	275434.898	465777.250
3766	PC 9+214.040	275383.098	466430.611
3767	PT 9+244.422	275391.881	466458.937
3768	POT 9+306.288 BK	275430.802	466507.026
EQ	POT 14+650.000 AH	275430.802	466507.026
3770	PC 14+888.715	275580.983	466692.581
3771	PT 15+067.038	275674.401	466843.911
3772	PC 15+238.982	275745.403	467000.510
3773	PT 15+335.373	275778.404	467090.977
3774	POT 15+464.140	275813.232	467214.945

ALIGNMENT TIES

PC 14+888.715
N = 275580.9826
E = 466692.5811

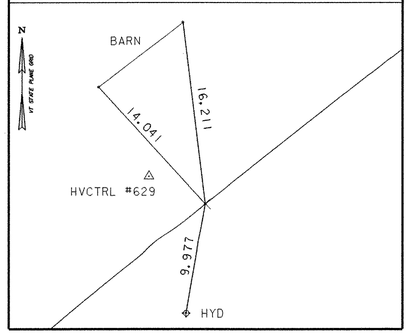

PT 15+067.038
N = 275674.4005
E = 466843.9105

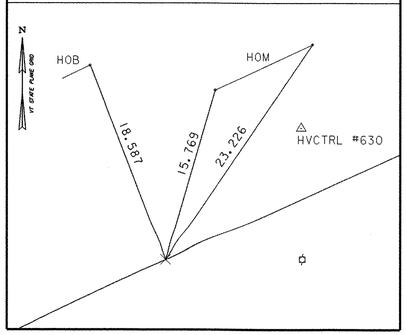

PC 15+238.982
N = 275745.4031
E = 467000.5099

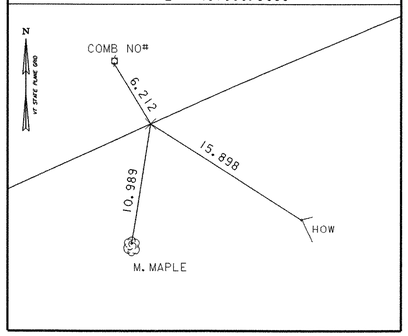

PT 15+335.373
N = 275778.4039
E = 467090.9773

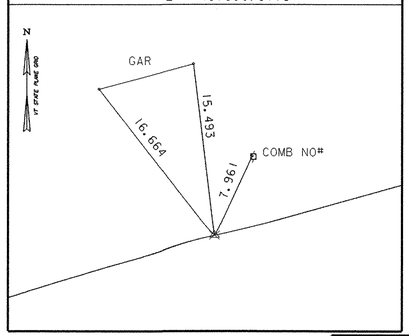

POT 15+464.140
N = 275813.2318
E = 467214.9449

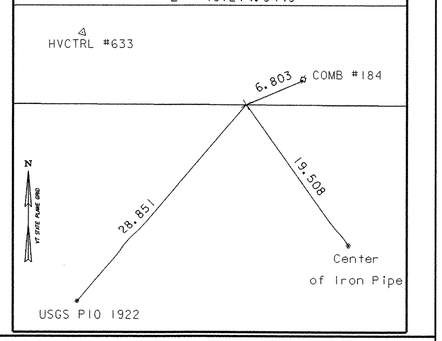

DATUM
VERTICAL NAVD 29
HORIZONTAL ASSUMED
ADJUSTMENT Compass

* ALIGNMENT STAKED

ALL TIE DISTANCES ARE IN METERS

PROJECT NAME: Highgate - Franklin
PROJECT NUMBER: STP RS0301(1) SA

FILE NAME: 85c060/survey/xc060ti.dgn
PROJECT LEADER:
DESIGNED BY:
PLOT DATE: 09-MAY-2005
DRAWN BY: R. B. & J. H.
CHECKED BY: R. Gilman
SHEET 81 OF 450

CONSTRUCT DRIVE
~~STA 1+080.000 RT GRAVEL~~
STA 1+085.000 LT GRAVEL
STA 1+115.000 RT GRAVEL
STA 1+136.000 LT PAVED
STA 1+160.000 RT GRAVEL
~~STA 1+194.000 LT GRAVEL~~
STA 1+220.000 RT ~~GRAVEL~~ PAVED
STA 1+000.00 LT GRAVEL
STA 1+267.00 LT GRAVEL

CONSTRUCT SPECIAL DITCH
STA 1+050.000 TO STA 1+079.750 LT
STA 1+050.000 TO ~~STA 1+074.520 RT~~
~~STA 1+085.750~~ TO STA 1+109.750 RT

RELOCATE MAIL BOX, SINGLE SUPPORT
STA 1+079.760 LT
STA 1+131.760 LT

EXCAVATION OF SURFACES AND PAVEMENTS
STA 1+000.000 TO STA 1+080.941 LT

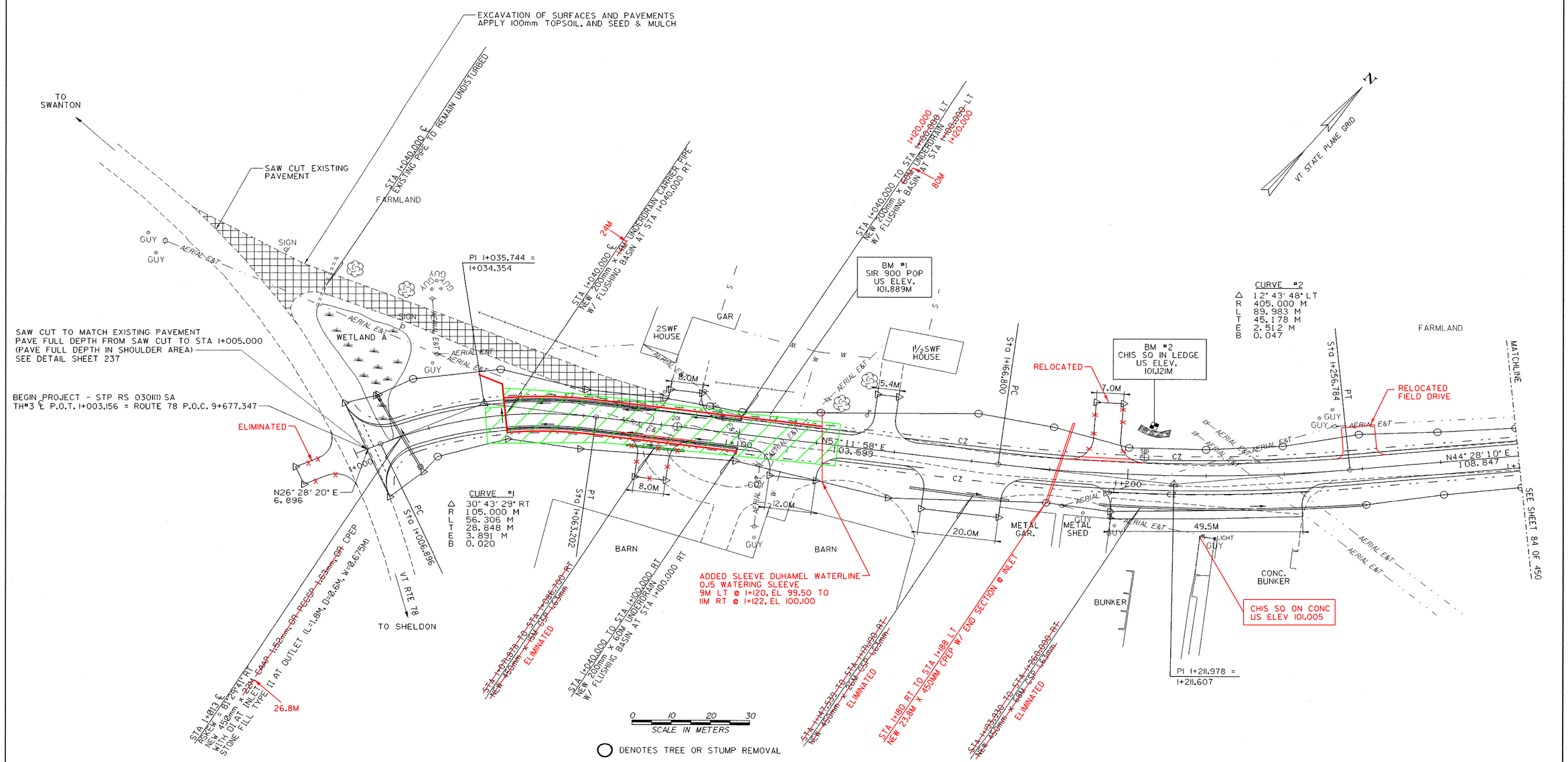

NOTES:
1. ALL SIDE ROAD RADII SHALL BE 11M UNLESS OTHERWISE NOTED. REFER TO STD B-12M
2. ALL DRIVE RADII SHALL BE 6M UNLESS OTHERWISE NOTED. REFER TO STD B-71M

BLASTED AREA

PROJECT NAME: HIGHGATE - FRANKLIN	
PROJECT NUMBER: STP RS 0301(1) SA	
FILE NAME: ...85c060/design/dc060bdr.dgn	PLOT DATE: 09-MAY-2005
PROJECT LEADER: DELLASANTA	DRAWN BY: SQUAD B
DESIGNED BY: SQUAD B	CHECKED BY: SQUAD B
IPARM FILE NAME: dc060101.i	SHEET 82 OF 450

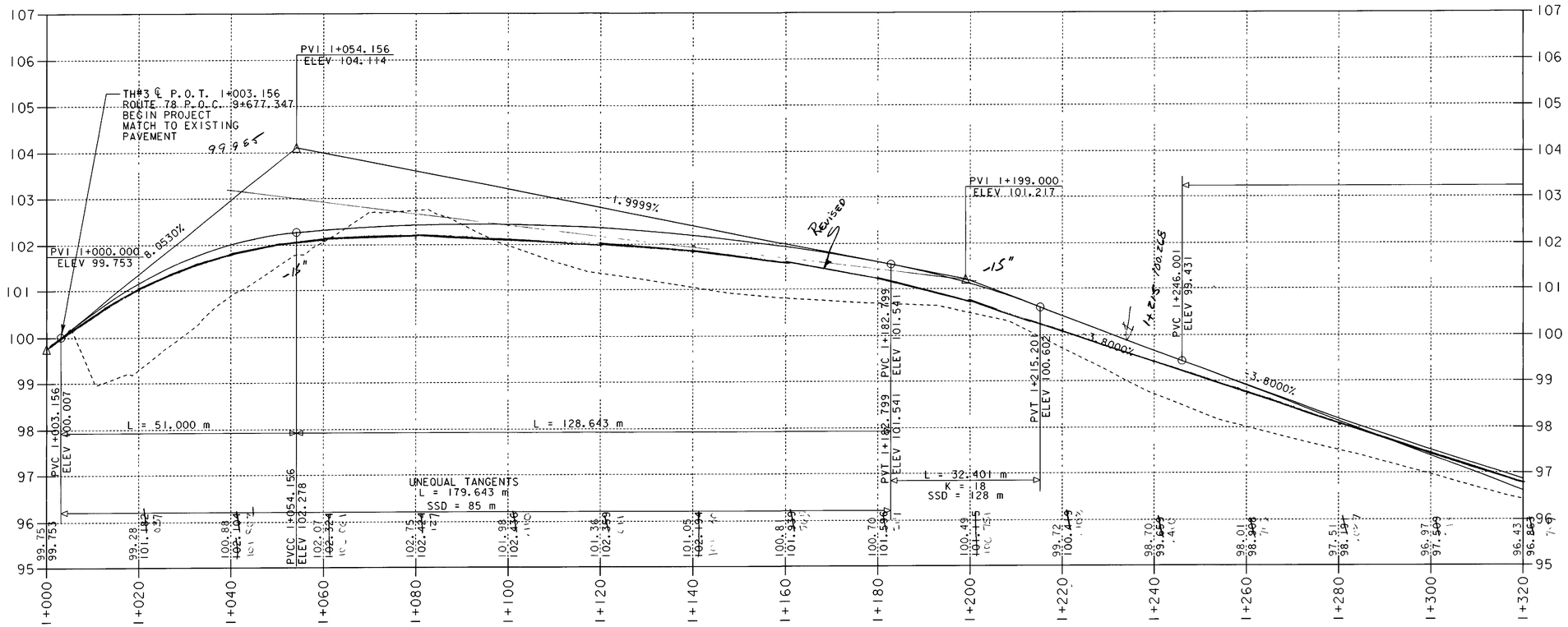

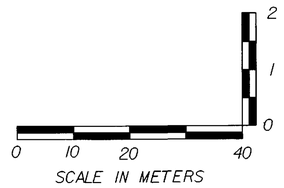

PROJECT NAME:	HIGHGATE - FRANKLIN
PROJECT NUMBER:	STP RS 0301(1) SA
FILE NAME: ...85c060/design/dc060xsl.dgn	PLOT DATE: 09-MAY-2005
PROJECT LEADER: DELLASANTA	DRAWN BY: SQUAD B
DESIGNED BY: SQUAD B	CHECKED BY: SQUAD B
IPARM FILE NAME: dc060p01.i	SHEET 83 OF 450

Metric

CONSTRUCT DRIVE
STA 1+344.000 LT GRAVEL
STA 1+~~414~~.000 RT GRAVEL (416)
STA 1+~~428~~.000 RT GRAVEL (433)
~~STA 1+484.000 LT GRAVEL~~
STA 1+498.000 RT GRAVEL
STA 1+564.000 LT GRAVEL
STA 1+477.000 LT GRAVEL
STA 1+623.000 RT GRAVEL

1+568.200
STEEL BEAM GUARDRAIL 1+598.600
STA ~~1+553.949~~ TO STA ~~1+627.842~~ RT
STA ~~1+617.592~~ TO STA 1+660.000 LT
1+618.000
1+565.000
STONE FILL, TYPE II 1+600.000
STA ~~1+555.892~~ TO STA ~~1+620.662~~ RT
STA ~~1+614.898~~ TO STA ~~1+650.000~~ LT
1+624.400 1+652.500

GRUBBING MATERIAL
~~STA 1+555.892 TO STA 1+620.662 RT~~
~~STA 1+614.898 TO STA 1+650.000 LT~~
STA 1+565.000 TO STA 1+600.000 RT
STA 1+624.400 TO STA 1+652.500 LT

STONE FILL TYPE I
STA 1+482.000 TO STA 1+558.000 LT
STA 1+569.000 TO STA 1+605.000 LT

RELOCATE MAIL BOX, SINGLE SUPPORT
STA 1+437.910 LT
STA 1+494.660 LT

1+605.000
EROSION MATTING (JUTE)
STA ~~1+555.892~~ TO STA 1+620.~~662~~ RT
~~STA 1+614.898 TO STA 1+650.000 LT~~
STA 1+380.000 TO STA 1+471.000 LT
STA 1+350.000 TO STA 1+420.000 RT

CONSTRUCT SPECIAL DITCH
STA 1+390.000 TO STA 1+406.000 RT
STA 1+480.000 TO STA 1+494.250 RT
STA 1+530.000 TO STA 1+559.500 LT
STA 1+569.000 TO STA 1+607.500 LT
STA 1+630.000 TO STA 1+660.000 RT

EROSION MATTING (JUTE)
STA 1+565.000 TO STA 1+600.000 RT
STA 1+624.400 TO STA 1+652.500 LT

ANCHOR FOR STEEL BEAM RAIL
~~STA 1+553.949 RT~~
~~STA 1+617.592 LT~~ STA 1+621.800 LT
~~STA 1+627.842 RT~~

MANUFACTURED TERMINAL SECTION
STA 1+553.000 TO STA 1+568.200 RT
STA 1+598.600 TO STA 1+613.800 RT

N
VT STATE PLANE GRID

~~STA 1+588.230 TO 1+591.770 LT~~
~~PERMANENT SEDIMENT TRAP~~
~~SEE DETAIL SHEET 162 OF 450~~

STA 1+640.000 ℄
NEW 200mm x ~~12M~~ 14M UNDERDRAIN CARRIER PIPE

STA 1+610.000 ℄
REMOVE EXISTING 460mm CGMP

STA 1+339.073 TO STA 1+348.314 LT
NEW 450mm x ~~11M~~ CSP 1.65mm

PI 1+411.715 =
1+411.669

RR SPIKE IN POLE #3
US ELEV 94.980

STA 1+471.000
~~1+472.253~~ TO STA ~~1+483.292~~ 1+483.000 LT
NEW 450mm x ~~12M~~ 12m CSP 1.65mm

STA 1+555.500
~~1+556.758~~ TO STA ~~1+572.292~~ 1+572.000 LT
NEW 450mm x ~~12M~~ 16.5M CSP 1.65mm

STONE FILL, TYPE I
STONE FILL, TYPE I
FARMLAND
WETLAND B
PC Sta 1+623.81
FIELD DRIVE
AERIAL E&T
AERIAL E
SIGN
GUY
UTILITY BOX
WELL
25 CHERRY
N44° 28' 10" E
108.847
N48° 55' 26" E
166.064
7.0M
3.6M
4.6M
1+400
1+500
1+600
CZ
UT
202
MATCHLINE
SEE SHEET 82 OF 450
SEE SHEET 86 OF 450

CURVE #3
Δ 04° 27' 15" RT
R 1185.000 M
L 92.122 M
T 46.084 M
E 0.896 M
B 0.020

PC Sta 1+365.631
PT Sta 1+457.753

~~STA 1+427.263 TO STA 1+428.325 RT~~
~~NEW 450mm x 14M CSP 1.65mm~~
~~ELIMINATED~~

~~STA 1+423.960 TO STA 1+425.655 RT~~
~~NEW 450mm x 15M CSP 1.65mm~~
~~ELIMINATED~~

STA 1+503.800
~~1+504.222~~ TO STA ~~1+489.500~~ 1+489.500 RT
~~NEW 450mm x 11M CSP 1.65mm~~
200mm X 14.3M UNDERDRAIN CARRIER PIPE

1+561.000
STA ~~1+538.230~~ TO STA ~~1+541.770~~ 1+565.000
PERMANENT SEDIMENT TRAP
SEE DETAIL SHEET 162 OF 450

APPROXIMATE LOCATION OF EXISTING UNDERGROUND TELEPHONE CABLE (VERIZON) TO BE RELOCATED TO EXISTING AERIAL LINE

BM #4
SIT 100 ELM
US ELEV.
88.017M

STA 1+615 ℄
RSKEW = 43°00'50" LT
NEW 900mm x 24M CSAP 1.91mm OR PCCSP 2.41mm OR CPEP
NEW 60M CRADLE HEADWALL AT INLET AND OUTLET
STONE FILL TYPE II AT INLET (L=3.6M, D=8.6M, W=1.35M)
STONE FILL TYPE II AT OUTLET (L=3.6M, D=8.6M, W=1.35M)
NEW 900mm CPEPES
~~STA 1+617.400 TO STA 1+634.000 RT~~
NEW 450mm x 16.6M CSP

STA 1+640.000 TO STA 1+660.000 RT
NEW 200mm x 20M UNDERDRAIN
W/ FLUSHING BASIN AT STA 1+640.000 RT

0 10 20 30
SCALE IN METERS

○ DENOTES TREE OR STUMP REMOVAL

NOTES:
1. ALL SIDE ROAD RADII SHALL BE 11M UNLESS OTHERWISE NOTED. REFER TO STD B-12M
2. ALL DRIVE RADII SHALL BE 6M UNLESS OTHERWISE NOTED. REFER TO STD B-7IM

BLASTED AREA

PROJECT NAME:	HIGHGATE - FRANKLIN
PROJECT NUMBER:	STP RS 0301(1) SA
FILE NAME: ...85c060/design/dc060bdr.dgn	PLOT DATE: 09-MAY-2005
PROJECT LEADER: DELLASANTA	DRAWN BY: SQUAD B
DESIGNED BY: SQUAD B	CHECKED BY: SQUAD B
IPARM FILE NAME: dc060102.1	SHEET 84 OF 450

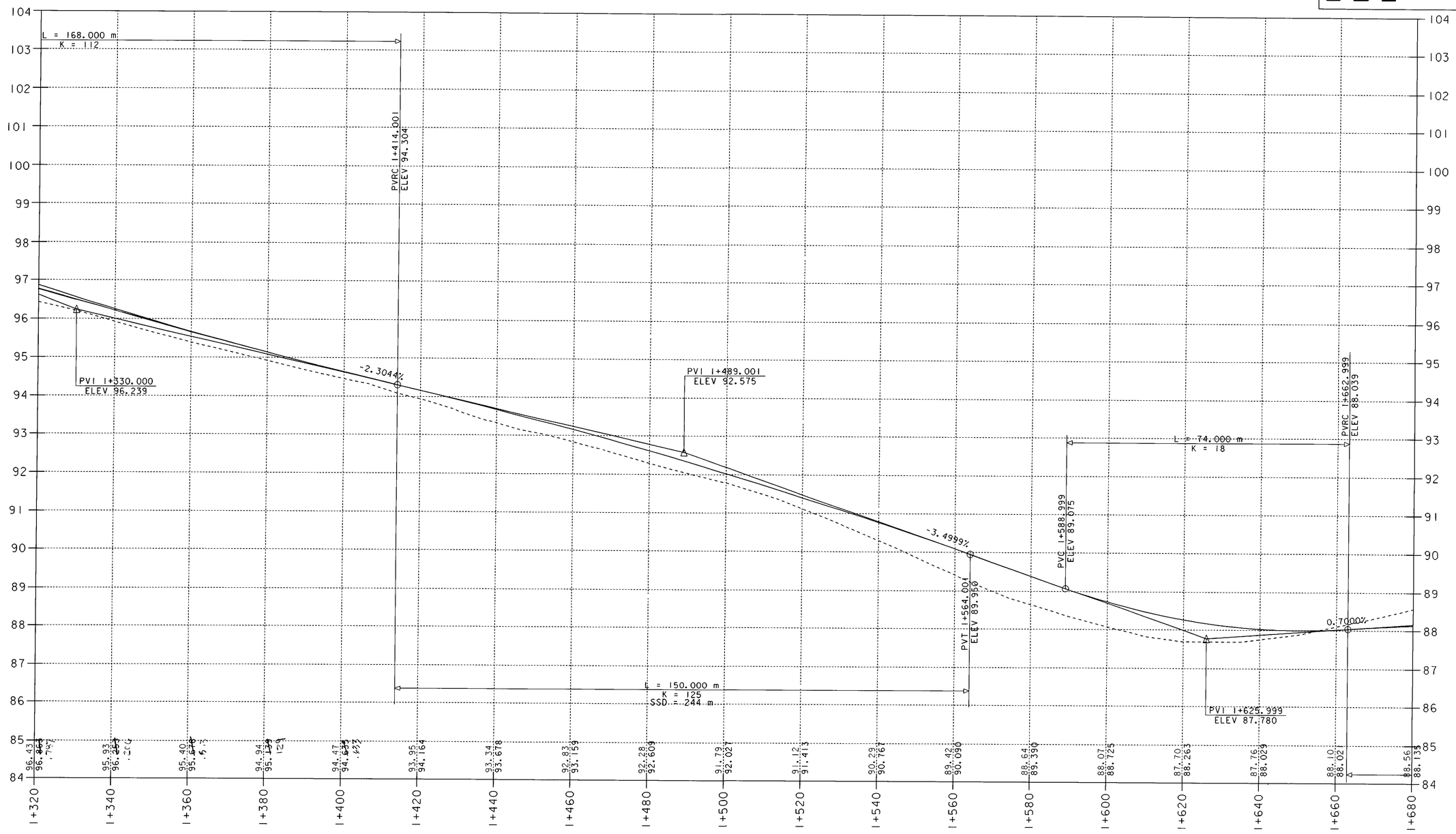

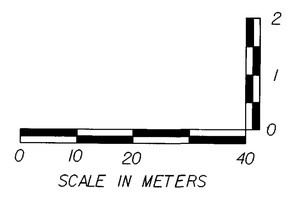

PROJECT NAME: HIGHGATE - FRANKLIN	
PROJECT NUMBER: STP RS 0301(1) SA	
FILE NAME: ...85c060/design/dc060xsl.dgn	PLOT DATE: 09-MAY-2005
PROJECT LEADER: DELLASANTA	DRAWN BY: SQUAD B
DESIGNED BY: SQUAD B	CHECKED BY: SQUAD B
IPARM FILE NAME: dc060p02.i	SHEET 85 OF 450

STEEL BEAM GUARDRAIL I+804.700
STA I+660.000 TO STA ~~I+676.911~~ LT
~~STA I+738.052 TO STA I+823.478 LT~~
STA ~~I+849.622~~ TO STA ~~I+915.719~~ LT
I+833.200 I+905.600
I+740.000

STONE FILL, TYPE II I+790.000
STA ~~I+739.236~~ TO STA ~~I+800.000~~ LT
STA ~~I+851.127~~ TO STA ~~I+890.000~~ LT
I+853.000 I+880.000

EROSION MATTING (JUTE)
~~STA I+739.236 TO STA I+800.000 LT~~
STA ~~I+851.127~~ TO STA ~~I+890.000~~ LT
I+921.000 I+973.000

RELOCATE MAIL BOX, SINGLE SUPPORT
STA I+966.260 LT

REMOVING AND RESETTING FENCE
~~STA I+928.000 TO STA I+932.000 LT~~

CONSTRUCT DRIVE
~~STA I+724.000 RT GRAVEL~~
STA ~~I+834.000~~ RT GRAVEL I+795.000
STA ~~I+834.000~~ LT GRAVEL I+828.000
STA I+920.000 LT GRAVEL
STA I+973.000 LT ~~GRAVEL~~ PAVED
~~STA I+973.000 RT GRAVEL~~
STA I+920.000 RT GRAVEL
STA I+996.000 LT GRAVEL
I+740.000

GRUBBING MATERIAL I+790.000
STA ~~I+739.236~~ TO STA ~~I+800.000~~ LT
STA ~~I+851.127~~ TO STA ~~I+890.000~~ LT
I+853.000 I+880.000

ANCHOR FOR STEEL BEAM RAIL
STA I+676.911 LT
STA I+738.052 LT
STA ~~I+823.478~~ LT I+800.900
STA ~~I+849.622~~ LT I+837.000
STA ~~I+915.719~~ LT
I+901.800

VERTICAL GRANITE CURB
STA I+924.800 TO STA I+970.700 LT

CONSTRUCT SPECIAL DITCH
STA I+660.000 TO STA I+721.250 RT
STA I+790.000 TO STA I+831.500 RT
STA I+836.500 TO STA I+850.000 RT
STA I+890.000 TO STA I+915.500 LT
STA I+890.000 TO STA I+971.500 RT
STA I+926.500 TO STA I+971.500 LT
STA I+975.500 TO STA I+990.000 RT
STA I+976.250 TO STA 2+010.000 LT

VT STATE PLANE GRID

STA I+740.000 ℄ NEW 200mm x 13M UNDERDRAIN CARRIER PIPE

STA I+765.000 ℄ REMOVE EXISTING 380mm CGMP

STA I+800.000 TO STA I+840.000 LT NEW 200mm x 40M UNDERDRAIN W/ FLUSHING BASIN AT STA I+800.000 LT

STA I+840.000 ℄ TO STA I+853.000 LT NEW 200mm x 14M UNDERDRAIN CARRIER PIPE W/ FLUSHING BASIN AT STA I+840.000 LT

STA I+860.000 ℄ NEW 200mm x 13M UNDERDRAIN CARRIER PIPE W/ FLUSHING BASIN AT STA I+860.000 RT

~~STA I+794.727 TO STA I+795.148 LT~~
~~NEW 450mm x 1M CSP I+63mm~~
ELIMNATED

STA I+860.000 TO STA 2+020.000 NEW 200mm x 140M UNDERDRAIN W/ FLUSHING BASIN AT STA 2+020.000 2+020.000 LT

CURVE #4
Δ 02° 36' 24" LT
R 6140.000 M
L 279.333 M
T 139.690 M
E 1.589 M
B N/C

WETLAND B
LEDGE
SB5
SB6
SB4
I+700
I+800
I+900
2+000
PT STA I+903.349
150 TWIN POP
5.0M
10 SAND CHERRY
6 FLOWER BED
LILAC BEDS
10 SAND CHERRY
POOL
WELL
6.3M
SHED
FLOWER BED
RR SPIKE IN POLE
US ELEV 87.458
METER
GUY
N46° 19' 02" E
180.668
UTILITY BOX
AERIAL E
CZ
UT
IRON
7.0M

ELIMINATED
FIELD DRIVE
PI I+763.508 =
I+763.459
FARMLAND

STA I+660.000 TO STA I+700.000 RT NEW 200mm x 40M UNDERDRAIN W/ FLUSHING BASIN AT STA I+700.000 RT

STA I+700.000 TO STA I+740.000 RT NEW 200mm x 40M UNDERDRAIN W/ FLUSHING BASIN AT STA I+700.000 RT AND W/ FLUSHING BASIN AT STA I+740.000 RT

STA I+763 ℄ ASKEW = 83°12'33" LT NEW 450MM X 20M ~~CMP I=52MM~~, OR PCCP I=63MM, OR CPEP WITH D1 AT INLET STONE FILL TYPE II AT OUTLET (L=1.8M, D=0.6M, W=0.675M)

STA I+800.000 TO STA I+840.000 RT NEW 200mm x 40M UNDERDRAIN W/ FLUSHING BASIN AT STA I+800.000 RT

~~STA I+828.398 TO STA I+841.298 RT~~
~~NEW 450mm x 13M CSP I=63mm~~

STA I+853 ℄ ASKEW = 82°49'21" LT NEW 450mm ~~CMP I=52mm~~ OR PCCP I=63mm OR CPEP WITH METAL END SECTION AT INLET STONE FILL TYPE II AT OUTLET (L=1.8M, D=0.6M, W=0.675M) REMOVE EXISTING 250mm CGMP

STA I+860.000 TO STA 2+000.000 NEW 200mm x 120M UNDERDRAIN W/ FLUSHING BASIN AT STA 2+000.000 2+000.000 RT

~~STA I+868.398 TO STA I+868.598 RT~~

APPROXIMATE LOCATION OF EXISTING UNDERGROUND TELEPHONE CABLE (VERIZON) TO BE RELOCATED TO EXISTING AERIAL LINE

SEE SHEET 84 OF 450
MATCHLINE
SEE SHEET 88 OF 450

0 10 20 30
SCALE IN METERS

DENOTES TREE OR STUMP REMOVAL

NOTES:
1. ALL SIDE ROAD RADII SHALL BE 11M UNLESS OTHERWISE NOTED. REFER TO STD B-12M
2. ALL DRIVE RADII SHALL BE 6M UNLESS OTHERWISE NOTED. REFER TO STD B-7M

BLASTED AREA

PROJECT NAME: HIGHGATE - FRANKLIN
PROJECT NUMBER: STP RS 0301(1) SA

FILE NAME: ...85c060/design/dc060bdr.dgn PLOT DATE: 09-MAY-2005
PROJECT LEADER: DELLASANTA DRAWN BY: SQUAD B
DESIGNED BY: SQUAD B CHECKED BY: SQUAD B
IPARM FILE NAME: dc060103.1 SHEET 86 OF 450

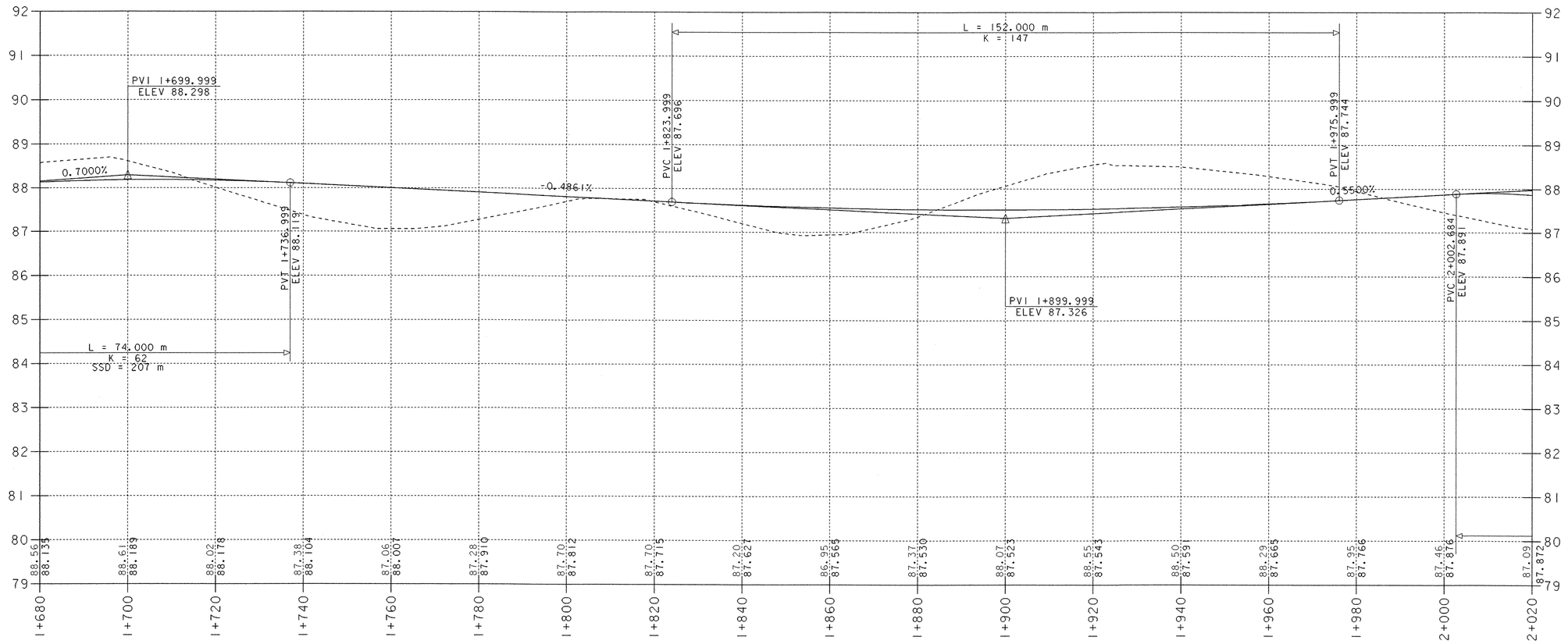

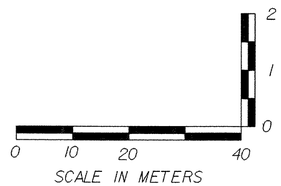

PROJECT NAME:	HIGHGATE - FRANKLIN
PROJECT NUMBER:	STP RS 0301(1) SA
FILE NAME: ...85c060/design/dc060xsl.dgn	PLOT DATE: 09-MAY-2005
PROJECT LEADER: DELLASANTA	DRAWN BY: SQUAD B
DESIGNED BY: SQUAD B	CHECKED BY: SQUAD B
IPARM FILE NAME: dc060p03.i	SHEET 87 OF 450

VT STATE PLANE GRID

CONSTRUCT DRIVE
STA 2+340.000 RT GRAVEL
STA 2+378.000 LT GRAVEL

MANUFACTURED TERMINAL SECTION (TANGENTIAL)
~~STA 2+178.587 TO STA 2+193.827 LT~~
~~STA 2+228.119 TO STA 2+243.358 LT~~
~~STA 2+193.881 TO STA 2+209.121 RT~~
~~STA 2+220.551 TO STA 2+235.791 RT~~
STA 2+243.800 TO STA 2+259.000 LT
STA 2+185.500 TO STA 2+200.700 RT

ANCHOR FOR STEEL BEAM GUARDRAIL
STA 2+160.000 LT
STA 2+231.700 RT

2+168.000
STONE FILL, TYPE II 2+240.000
STA ~~2+170.000~~ TO STA ~~2+245.000~~ LT
STA ~~2+193.903~~ TO STA ~~2+235.810~~ RT
2+200.000 2+227.000
STA 2+080.000 TO STA 2+180.000 RT

RELOCATE MAIL BOX, SINGLE SUPPORT
STA 2+379.470 LT

2+168.000
GRUBBING MATERIAL 2+240.000
STA ~~2+170.000~~ TO STA ~~2+245.000~~ LT
STA ~~2+193.903~~ TO STA ~~2+235.810~~ RT
2+200.000 2+227.000

2+240.000
EROSION MATTING (JUTE) 2+282.000
STA ~~2+170.000~~ TO STA ~~2+245.000~~ LT
~~STA 2+193.903 TO STA 2+235.810 RT~~
STA 2+055.000 TO STA 2+120.000 LT
STA 2+240.000 TO STA 2+300.000 RT
STA 2+380.000 RT
STA 2+168.000 TO STA 2+240.000 LT
STA 2+200.000 TO STA 2+227.000 RT

2+156.200
STEEL BEAM GUARDRAIL 2+243.800
STA ~~2+193.821~~ TO STA ~~2+228.119~~ LT
STA ~~2+209.121~~ TO STA ~~2+220.551~~ RT
2+200.700 2+235.500

SNOW FENCE
STA 2+060.000 TO STA 2+120.000 RT

REMOVING AND RESETTING FENCE
~~STA 2+222.000 LT - 2.5M BACK~~

CONSTRUCT SPECIAL DITCH
STA 2+070.000 TO STA 2+150.000 RT
STA 2+280.000 TO STA 2+375.000 LT
STA 2+280.750 TO STA 2+380.000 RT

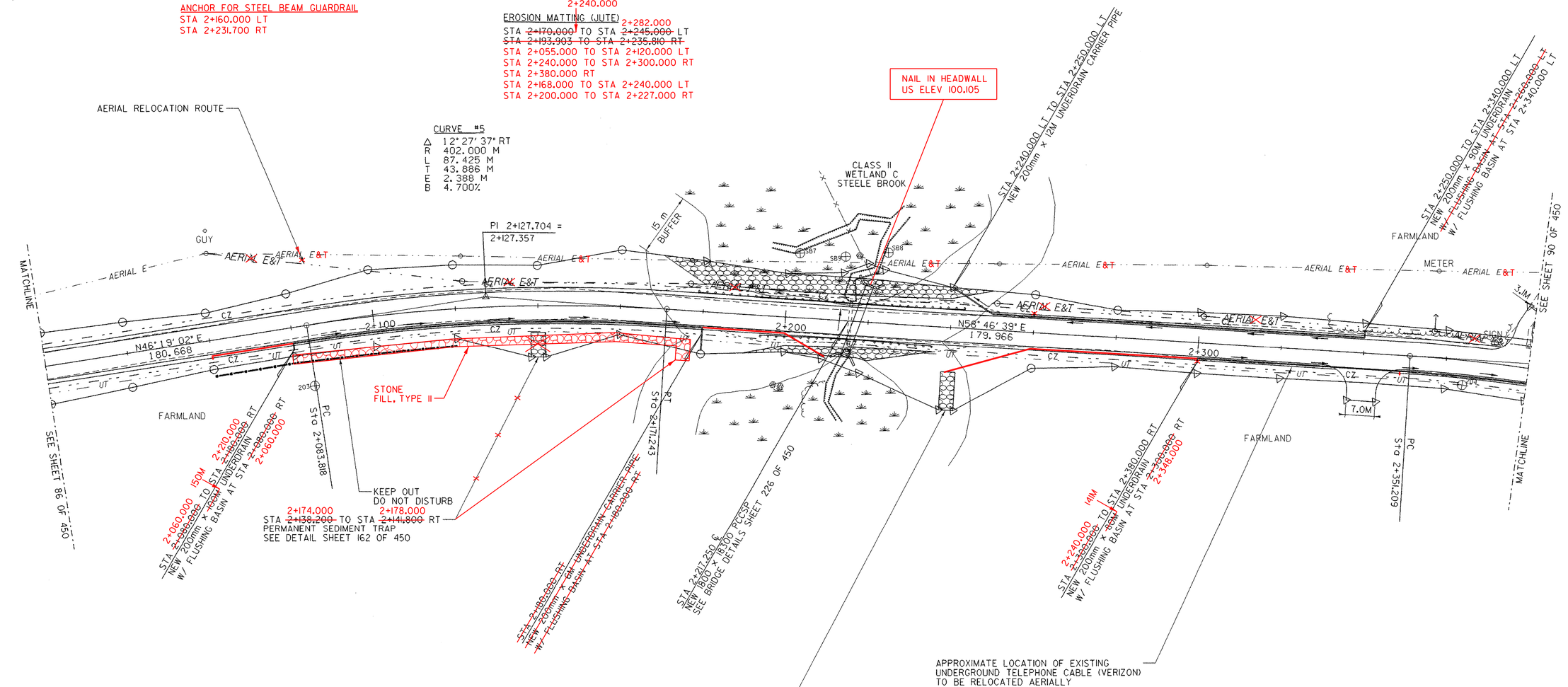

○ DENOTES TREE OR STUMP REMOVAL

NOTES:
1. ALL SIDE ROAD RADII SHALL BE 11M UNLESS OTHERWISE NOTED. REFER TO STD B-12M
2. ALL DRIVE RADII SHALL BE 6M UNLESS OTHERWISE NOTED. REFER TO STD B-71M

PROJECT NAME:	HIGHGATE - FRANKLIN
PROJECT NUMBER:	STP RS 0301(1) SA
FILE NAME: ...85c060/design/dc060bdr.dgn	PLOT DATE: 09-MAY-2005
PROJECT LEADER: DELLASANTA	DRAWN BY: SQUAD B
DESIGNED BY: SQUAD B	CHECKED BY: SQUAD B
IPARM FILE NAME: dc060104.1	SHEET 88 OF 450

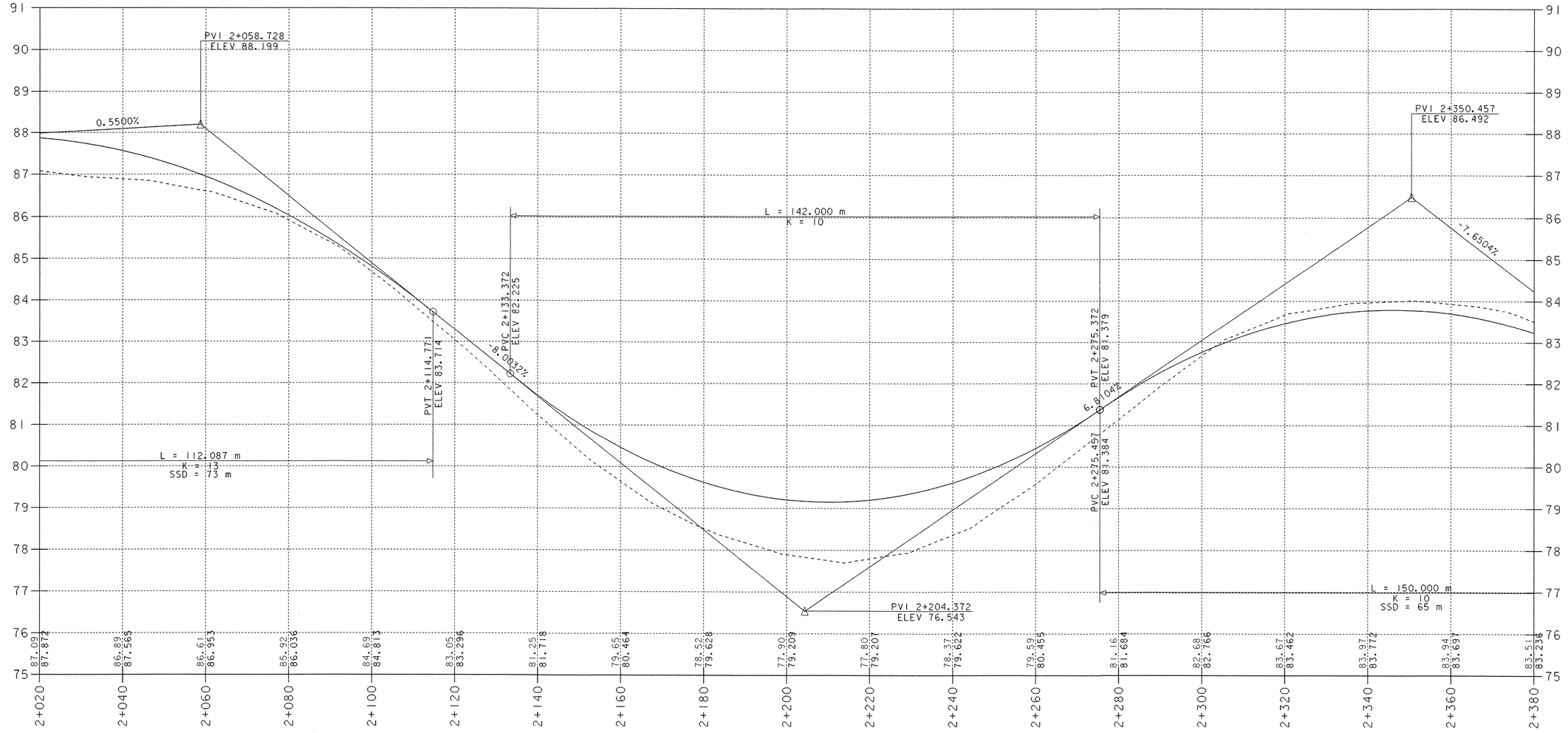

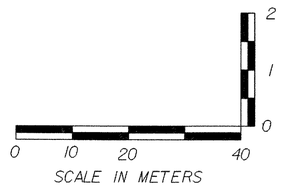

PROJECT NAME:	HIGHGATE - FRANKLIN
PROJECT NUMBER:	STP RS 0301(I) SA
FILE NAME: ...85c060/design/dc060xsl.dgn	PLOT DATE: 09-MAY-2005
PROJECT LEADER: DELLASANTA	DRAWN BY: SQUAD B
DESIGNED BY: SQUAD B	CHECKED BY: SQUAD B
IPARM FILE NAME: dc060p04.i	SHEET 89 OF 450

N

VT STATE PLANE GRID

STEEL BEAM GUARDRAIL SEE BELOW
~~STA 2+434.922 TO STA 2+503.821 RT~~
~~STA 2+472.326 TO STA 2+532.701 LT~~
~~STA 2+633.813 TO STA 2+637.623 LT~~
~~STA 2+633.813 TO STA 2+637.623 RT~~

STONE FILL, TYPE II SEE BELOW
~~STA 2+438.643 TO STA 2+498.810 RT~~
~~STA 2+476.000 TO STA 2+529.029 LT~~
~~STA 2+618.257 TO STA 2+653.180 LT~~
~~STA 2+618.257 TO STA 2+653.180 RT~~

CONSTRUCT DRIVE
STA 2+506.000 RT GRAVEL
STA 2+562.000 RT GRAVEL
STA ~~2+590.000~~ 2+578.000 LT GRAVEL

MANUFACTURED TERMINAL SECTION (TANGENTIAL) SEE BELOW
~~STA 2+618.247 TO STA 2+633.813 LT~~
~~STA 2+637.623 TO STA 2+653.189 LT~~
~~STA 2+618.247 TO STA 2+633.813 RT~~
~~STA 2+637.623 TO STA 2+653.189 RT~~

RELOCATE MAIL BOX, SINGLE SUPPORT
STA 2+558.830 LT

GRUBBING MATERIAL
~~STA 2+438.643 TO STA 2+498.810 RT~~
~~STA 2+476.000 TO STA 2+529.029 LT~~
~~STA 2+618.257 TO STA 2+653.180 LT~~
~~STA 2+618.257 TO STA 2+653.180 RT~~
STA 2+439.000 TO STA 2+491.200 RT
STA 2+473.000 TO STA 2+532.000 LT
~~STA 2+538.230 TO STA 2+541.770 LT~~
~~PERMANENT SEDIMENT TRAP~~
~~SEE DETAIL SHEET 162 OF 450~~

EROSION MATTING (JUTE) SEE BELOW
~~STA 2+438.643 TO STA 2+498.810 RT~~
~~STA 2+476.000 TO STA 2+529.029 LT~~
~~STA 2+618.257 TO STA 2+653.180 LT~~
~~STA 2+618.257 TO STA 2+653.180 RT~~

CONSTRUCT SPECIAL DITCH
STA 2+380.000 TO STA 2+410.000 RT
STA 2+536.000 TO STA 2+558.000 RT
STA 2+550.000 TO STA 2+588.500 LT
STA 2+565.000 TO STA 2+580.000 RT
STA 2+710.000 TO STA 2+730.000 LT

ANCHOR FOR STEEL BEAM RAIL
~~STA 2+434.922 RT~~ MTS
~~STA 2+472.326 LT~~ MTS
~~STA 2+503.821 RT~~
~~STA 2+532.701 LT~~
STA 2+493.800 RT
STA 2+550.800 LT
STA 2+609.300 LT
STA 2+649.700 RT

SLEEVES FOR UTILITIES (115 mm DIAMETER)(MOD)
STA ~~2+700.000~~ TO STA 2+740.000 LT
2+685.000

VAOT Metric

AERIAL RELOCATION ROUTE
PAINT SPOT ON HEADWALL US ELEV 75.573
PI 2+394.809 = 2+394.426
METER
FARMLAND
AERIAL E&T
STA 2+380.000 TO STA 2+430.000 RT NEW 200mm x 40M UNDERDRAIN W/ FLUSHING BASIN 50M E&T
16 m BUFFER
CLASS II WETLAND D
STONE FILL, TYPE II
SBI2 SBI3 SBI4
NEW POLE WITH PUSH BRACE
BM #6 SIR 600 MAPLE US ELEV. 264.420M
600 MPL BM#6
STA 2+549.933 PC
25 PINE
RELOCATED FIELD DRIVE
30 BIRCH
60 PINE
AERIAL E&T
AER E&T
N71° 56' 12" E 111.907
2+400
2+500
2+600
2+700
UT CZ
200 POPLAR
FLOWER BED
SHRUBS
CEDAR TREES
LEACH AREA
1½ STORY
AR 420.2
UTILITY BOX
PLANTING BED
900 MAPLE
SAVED
SPRUCE
SPRUCE
SPRUCE
SPRUCE
METER
LIGHT
PI 2+565.963 = 2+565.959
STA 2+530.000 TO STA 2+580.000 LT NEW 200mm x 40M UNDERDRAIN W/ FLUSHING BASIN AT STA 2+580.000 50M
STA 2+581.989 PT
3.6M
IP RESET #451 2+637.566, 7.544 LT
PAINT SPOT ON HEADWALL US ELEV 76.305
2+647.000 STA ~~2+658.230~~ TO STA ~~2+661.770~~ 2+650.500 LT PERMANENT SEDIMENT TRAP SEE DETAIL SHEET 162 OF 450
STONE FILL, TYPE II
END AERIAL RELOCATION BEGIN UNDERGROUND RELOCATION ROUTE BY VERIZON
STA 2+686.335 PC
STA 2+686.000 LT NEW 200mm x 4M UNDERDRAIN CARRIER PIPE W/ FLUSHING BASIN AT STA 2+686.000 LT
REVISED PROPOSED UNDERGROUND SLEEVE FOR UTILITIES INSTALL WITHIN R.O.W. SEE DETAIL SHEET 68 OF 450
N70° 06' 02" E 106.346
PUT
MATCHLINE
SEE SHEET 88 OF 450
SEE SHEET 92 OF 450
IP RESET #451 2+451.075, 6.965 RT
STA 2+430.000 RT NEW 200mm x 6M UNDERDRAIN W/ FLUSHING BASIN 4M
STA 2+438.926 PT
STA 2+512.500 PC SP 16.3mm
STA 2+490.000 TO STA 2+496.228 NEW 450mm x 16M CSP 23.5M
STA 2+530.000 ℄ NEW 200mm x 16M UNDERDRAIN CARRIER PIPE
STA 2+483.000 ℄ NEW 1850 x 1850 x 19800 PRECAST CONCRETE BOX SEE BRIDGE DETAILS SHEET 227 OF 450
STA 2+540.000 ℄ NEW 200mm x 13M UNDERDRAIN CARRIER PIPE W/ FLUSHING BASIN AT STA 2+540.000 RT
WELL
HOUSE
LEACH AREA
TREE PROTECTION ZONE SEE LANDSCAPING PLANS
APPROXIMATE LOCATION OF EXISTING UNDERGROUND TELEPHONE CABLE (VERIZON) TO BE RELOCATED AERIALLY AND UNERGROUND AS SHOWN
STA 2+636 ℄ NEW 750mm x 19M CMAP 1.14mm DR RC65P 2.04mm DR CPEP NEW CRM CRADLE HEADWALL AT INLET AND OUTLET STONE FILL TYPE II AT INLET (L=3.0M, D=0.6M, W=1.125M) STONE FILL TYPE II AT OUTLET (L=3.0M, D=0.6M, W=1.125M) REMOVE EXISTING 460mm CMP 22M
2+644.000 STA ~~2+658.230~~ TO STA ~~2+661.770~~ 2+648.300 RT PERMANENT SEDIMENT TRAP SEE DETAIL SHEET 162 OF 450
EXISTING 250mm SLEEVE TO BE REMOVED AND REPLACED WITH A NEW 250mm SLEEVE AND A NEW ~~150mm PIPE~~ 200mm UNDERDRAIN CARRIER PIPE
STA 2+666.000 TO STA 2+740.000 LT NEW 200mm x 66M UNDERDRAIN W/ FLUSHING BASIN AT STA 2+740.000 LT 81M
EXTEND EXISTING FIELD DRAIN AS NEEDED WITH SLEEVE FOR UTILITIES (MOD) SEE DETAIL SHEET 68 OF 450

CURVE #8
Δ 18° 04' 38" LT
R 418.000 M
L 131.882 M
T 66.494 M
E 5.256 M
B 4.500%

CURVE #6
Δ 13° 09' 34" RT
R 378.000 M
L 86.817 M
T 43.600 M
E 2.506 M
B 4.900%

CURVE #7
Δ 01° 50' 12" LT
R 1000.000 M
L 32.056 M
T 16.030 M
E 0.128 M
B 2.200%

STEEL BEAM GUARDRAIL
STA 2+436.600 TO STA 2+497.600 RT
STA 2+462.200 TO STA 2+554.600 LT
STA 2+605.500 TO STA 2+647.400 LT
STA 2+625.800 TO STA 2+653.500 RT

STONE FILL, TYPE II
STA 2+439.000 TO STA 2+491.200 RT
STA 2+463.000 TO STA 2+532.000 LT
STA 2+618.257 TO STA 2+653.180 RT
STA 2+439.000 TO STA 2+491.200 RT
STA 2+463.000 TO STA 2+532.000 LT
STA 2+411.000 TO STA 2+432.000 RT
STA 2+427.500 TO STA 2+468.000 LT
STA 2+640.000 TO STA 2+647.000 LT

MANUFACTURED TERMINAL SECTION (TANGENTIAL)
STA 2+647.400 TO STA 2+662.600 LT
STA 2+610.600 TO STA 2+625.800 RT
STA 2+421.400 TO STA 2+436.600 RT
STA 2+447.400 TO STA 2+462.200 LT

EROSION MATTING (JUTE)
STA 2+380.000 LT
STA 2+395.000 TO STA 2+420.000 LT
STA 2+438.000 TO STA 2+479.000 RT
STA 2+439.000 TO STA 2+491.200 RT
STA 2+443.000 TO STA 2+485.000 LT
STA 2+463.000 TO STA 2+532.000 LT
STA 2+510.000 TO STA 2+530.000 RT
STA 2+595.000 TO STA 2+624.000 LT
STA 2+610.000 TO STA 2+632.000 RT
STA 2+650.000 TO STA 2+695.000 LT

0 10 20 30
SCALE IN METERS

○ DENOTES TREE OR STUMP REMOVAL

NOTES:
1. ALL SIDE ROAD RADII SHALL BE 11M UNLESS OTHERWISE NOTED. REFER TO STD B-12M
2. ALL DRIVE RADII SHALL BE 6M UNLESS OTHERWISE NOTED. REFER TO STD B-7IM

PROJECT NAME:	HIGHGATE - FRANKLIN
PROJECT NUMBER:	STP RS 0301(1) SA
FILE NAME: ...85c060/design/dc060bdr.dgn	PLOT DATE: 09-MAY-2005
PROJECT LEADER: DELLASANTA	DRAWN BY: SQUAD B
DESIGNED BY: SQUAD B	CHECKED BY: SQUAD B
IPARM FILE NAME: dc060105.i	SHEET 90 OF 450

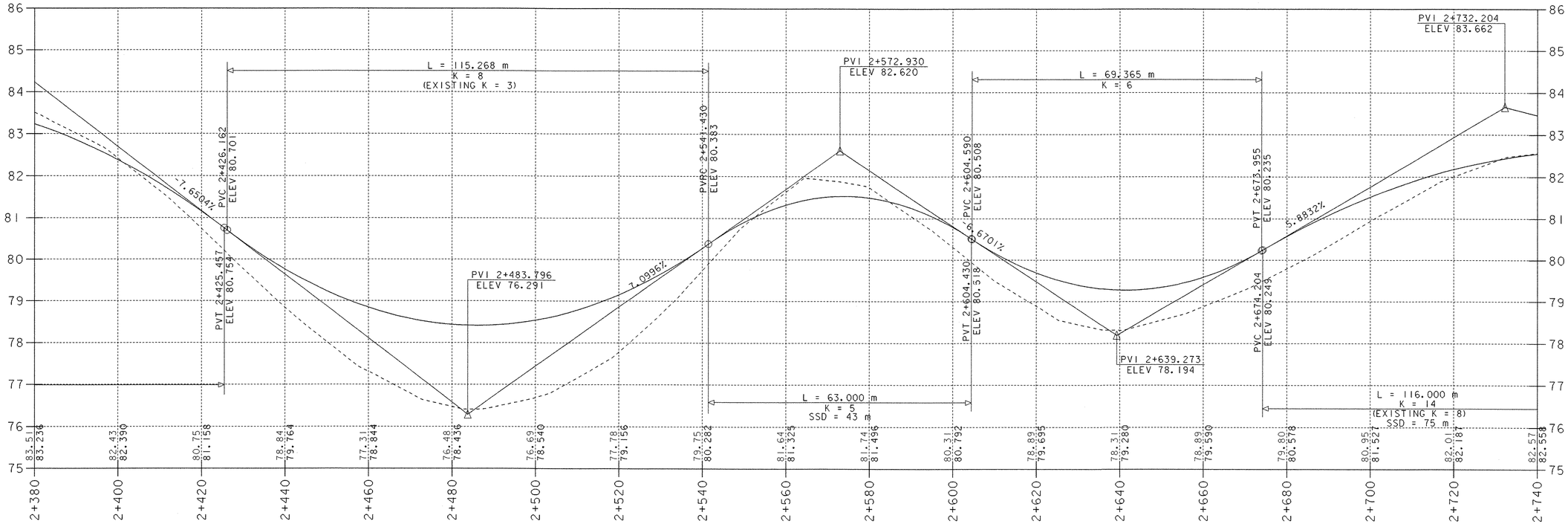

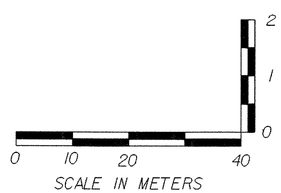

PROJECT NAME:	HIGHGATE - FRANKLIN
PROJECT NUMBER:	STP RS 0301(I) SA
FILE NAME: ...85c060/design/dc060xsl.dgn	PLOT DATE: 09-MAY-2005
PROJECT LEADER: DELLASANTA	DRAWN BY: SQUAD B
DESIGNED BY: SQUAD B	CHECKED BY: SQUAD B
IPARM FILE NAME: dc060p05.i	SHEET 91 OF 450

VT STATE PLANE GRID

STEEL BEAM GUARDRAIL
~~STA 2+831.421 TO STA 2+854.221 LT~~
~~STA 2+831.421 TO STA 2+854.221 RT~~
STA 2+833.200 TO STA 2+856.100 LT

GRUBBING MATERIAL
~~STA 2+816.217 TO STA 2+869.494 LT~~
~~STA 2+816.217 TO STA 2+869.494 RT~~

REMOVING AND RESETTING FENCE
~~STA 2+981.280 TO STA 3+008.210 RT~~
~~STA 2+981.280 RT - 2M BACK~~
~~STA 3+008.210 RT - 4.5M BACK~~
~~STA 3+099.000 TO STA 3+100.000 LT~~
~~STA 3+099.000 LT - 4M BACK~~

SLEEVES FOR UTILITIES (115 mm DIAMETER)(MOD)
STA 2+740.000 TO STA 2+830.000 LT

MANUFACTURED TERMINAL SECTION (TANGENTIAL)
~~STA 2+816.222 TO STA 2+831.421 RT~~
~~STA 2+854.221 TO STA 2+869.461 RT~~
~~STA 2+816.222 TO STA 2+831.421 LT~~
~~STA 2+854.221 TO STA 2+869.461 LT~~
STA 2+818.000 TO STA 2+833.200 LT
STA 2+856.100 TO STA 2+871.300 LT

STONE FILL, TYPE II
~~STA 2+816.217 TO STA 2+869.494 LT~~
~~STA 2+816.217 TO STA 2+869.494 RT~~
} 1 ON 2 SLOPE

CONSTRUCT DRIVE
STA 2+983.000 LT GRAVEL
STA 3+037.000 RT GRAVEL
STA 3+068.000 LT GRAVEL
STA 2+965.000 RT GRAVEL
~~EROSION MATTING (JUTE)~~ SEE BELOW
~~STA 2+816.217 TO STA 2+869.494 LT~~
~~STA 2+816.217 TO STA 2+869.494 RT~~

RELOCATE MAIL BOX, SINGLE SUPPORT
STA 3+042.750 LT
STA 3+077.850 LT

CONSTRUCT SPECIAL DITCH
STA 2+890.000 TO STA 2+910.000 RT
STA 2+950.000 TO STA 2+979.500 LT
STA 2+950.000 TO STA 3+030.500 RT
STA 2+986.500 TO STA 3+030.000 LT
STA 3+045.000 TO STA 3+090.000 RT

EROSION MATTING (JUTE)
STA 2+980.000 TO STA 3+030.000 RT
STA 3+013.000 TO STA 3+060.000 LT
STA 3+048.000 TO STA 3+100.000 RT
STA 3+075.000 TO STA 3+100.000 LT

~~STA 3+098.230 TO STA 3+100.000 LT~~
~~PERMANENT SEDIMENT TRAP~~
~~SEE DETAIL SHEET 162 OF 450~~

EXISTING WATER LINE TO REMAIN UNDISTURBED

CURVE #8
△ 18° 04' 38" LT
R 418.000 M
L 131.882 M
T 66.494 M
E 5.256 M
B 4.500%

CURVE #9
△ 09° 37' 57" RT
R 571.000 M
L 95.996 M
T 48.111 M
E 2.023 M
B 3.700%

SEE SHEET 90 OF 450

~~STA 2+740.000 TO STA 2+800.000 LT~~
~~NEW 200mm x 60M UNDERDRAIN~~
~~W/ FLUSHING BASIN AT STA 2+800.000 LT~~

REVISED PROPOSED UNDERGROUND SLEEVE FOR UTILITIES INSTALL WITHIN R.O.W. SEE DETAIL SHEET 68 OF 450

END UNDERGROUND RELOCATION ROUTE BY VERIZON

FARMLAND

APPROXIMATE LOCATION EXISTING STAND PIPES

~~STA 2+860.000 LT~~
~~NEW 200mm x 4M UNDERDRAIN CARRIER PIPE~~
~~W/ FLUSHING BASIN AT STA 2+860.000 LT~~

RR SPIKE IN POLE
US ELEV 79.683

~~STA 2+860.000 TO STA 2+960.000 LT~~
~~NEW 200mm x 100M UNDERDRAIN~~
~~W/ FLUSHING BASIN AT STA 2+960.000 LT~~

AERIAL RELOCATION ROUTE

CHISEL SQ
ON CONC
US ELEV 82.436
BM

EXISTING UNDERDRAIN TO REMAIN AND DRAIN INTO DITCH

~~STA 3+062.143 TO STA 3+074.791 LT~~
~~NEW 450mm x 15M CSP 1.63mm~~
~~REMOVE EXISTING 380mm CGMP AND 205mm PLASTIC~~

~~STA 3+060.000 ℄~~
~~NEW 200mm x 8M UNDERDRAIN CARRIER PIPE~~
~~W/ FLUSHING BASIN AT STA 3+060.000 LT~~

~~STA 2+960.000 TO STA 3+060.000 LT~~
~~NEW 200mm x 100M UNDERDRAIN~~

1½SWF HOUSE

600 MPL

50 MPL

25 MPL

PI 3+098.634 = 3+098.408

SEE SHEET 94 OF 450

PUT

CZ

AERIAL I

AERIAL T

AERIAL E

UT

UTILITY BOX

2+800

2+900

3+000

N52° 01' 24" E
230.306

5.0M

4.7M

6.0M

205

PI 2+754.829 = 2+753.841

~~STA 2+843.000 ℄~~
~~EXISTING 250mm SLEEVE~~
~~TO BE REMOVED AND REPLACED~~
~~WITH A NEW 250mm SLEEVE AND A NEW 150mm PIPE~~

~~STA 2+847 ℄~~
~~45KEW = 82°04'47" LT~~
~~NEW 750mm x 18M CMAP 1.63mm OR PCCSP 2.08mm OR CPEP~~
~~NEW CMP CRADLE HEADWALL AT INLET AND OUTLET~~
~~STONE FILL TYPE I AT INLET (L=3.0M, D=0.6M, W=1.125M)~~
~~STONE FILL TYPE II AT OUTLET (L=3.0M, D=0.6M, W=1.125M)~~
~~REMOVE EXISTING 380mm CMP~~

~~NEW 750mm CPEPES~~

~~3M~~

~~STA 2+860.000 RT~~
~~NEW 200mm x 3M UNDERDRAIN CARRIER PIPE~~
~~W/ FLUSHING BASIN AT STA 2+860.000 RT~~

~~STA 2+860.000 TO STA 2+960.000 RT~~
~~NEW 200mm x 100M UNDERDRAIN~~
~~W/ FLUSHING BASIN AT STA 2+960.000 RT~~

~~STA 2+960.000 TO STA 3+100.000 RT~~
~~NEW 200mm x 140M UNDERDRAIN~~
~~W/ FLUSHING BASIN AT STA 2+960.000 RT~~

~~IP RESET #451~~
~~2+981.982, 7.018 RT~~

~~STA 3+020.000 RT~~
~~FLUSHING BASIN~~

~~STA 3+033.447 TO STA 3+045.965 RT~~
~~REMOVE EXISTING DRIVE PIPE~~

~~STA 3+031.285 TO STA 3+048.064 RT~~
~~NEW 450mm x 11M CSP 1.63mm~~

ALARM WIRES POST GUY POST

UTILITY BOX

DEC TREE DEC TREE DEC TREE

PC STA 3+050.523

WELL

1SWF HOUSE

1SWF BLDG "SHOP"

EXISTING UNDERDRAIN TO REMAIN AND DRAIN INTO DITCH

MATCHLINE

MATCHLINE

0 10 20 30
SCALE IN METERS

○ DENOTES TREE OR STUMP REMOVAL

NOTES:
1. ALL SIDE ROAD RADII SHALL BE 11M UNLESS OTHERWISE NOTED. REFER TO STD B-12M
2. ALL DRIVE RADII SHALL BE 6M UNLESS OTHERWISE NOTED. REFER TO STD B-71M

PROJECT NAME:	HIGHGATE - FRANKLIN
PROJECT NUMBER:	STP RS 0301(1) SA
FILE NAME: ...85c060/design/dc060bdr.dgn	PLOT DATE: 09-MAY-2005
PROJECT LEADER: DELLASANTA	DRAWN BY: SQUAD B
DESIGNED BY: SQUAD B	CHECKED BY: SQUAD B
IPARM FILE NAME: dc060106.i	SHEET 92 OF 450

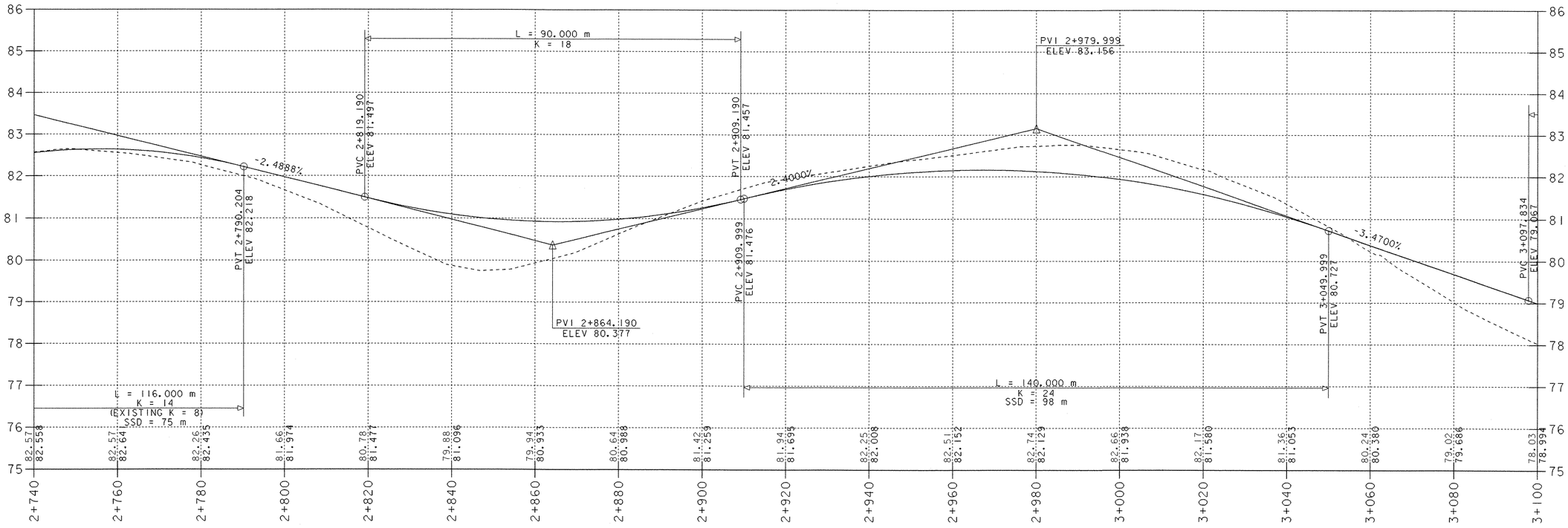

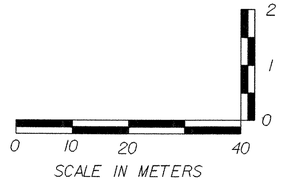

PROJECT NAME:	HIGHGATE - FRANKLIN
PROJECT NUMBER:	STP RS 0301(I) SA
FILE NAME: ...85c060/design/dc060xsl.dgn	PLOT DATE: 09-MAY-2005
PROJECT LEADER: DELLASANTA	DRAWN BY: SQUAD B
DESIGNED BY: SQUAD B	CHECKED BY: SQUAD B
IPARM FILE NAME: dc060p06.i	SHEET 93 OF 450

CONSTRUCT DRIVE
STA 3+244.000 RT GRAVEL
STA 3+400.000 LT GRAVEL

GRUBBING MATERIAL
~~STA 3+104.584 TO STA 3+176.638 LT~~
~~STA 3+124.824 TO STA 3+178.039 RT~~
STA 3+104.800 TO STA 3+187.000 LT
STA 3+130.300 TO STA 3+160.000 RT

MANUFACTURED TERMINAL SECTION (TANGENTIAL)
~~STA 3+104.850 TO STA 3+119.979 LT~~
~~STA 3+161.383 TO STA 3+176.622 LT~~
~~STA 3+124.620 TO STA 3+139.983 RT~~
~~STA 3+162.784 TO STA 3+178.023 RT~~
STA 3+100.400 TO STA 3+115.600 LT
STA 3+163.500 TO STA 3+178.700 RT
~~STONE FILL, TYPE II~~ SEE BELOW
~~STA 3+104.584 TO STA 3+176.638 LT~~
~~STA 3+124.824 TO STA 3+178.039 RT~~

STEEL BEAM GUARDRAIL
~~STA 3+119.979 TO STA 3+161.383 LT~~
~~STA 3+139.983 TO STA 3+162.784 RT~~
STA 3+115.600 TO STA 3+188.000 LT
STA 3+121.600 TO STA 3+163.500 RT

~~EROSION MATTING (JUTE)~~ SEE BELOW
~~STA 3+104.584 TO STA 3+176.638 LT~~
~~STA 3+124.824 TO STA 3+178.039 RT~~

REMOVING AND RESETTING FENCE
~~STA 3+100.000 TO STA 3+109.000 LT~~
~~STA 3+110.110 RT 2M BACK~~
~~STA 3+110.110 TO STA 3+139.850 RT~~
~~STA 3+141.500 TO STA 3+166.000 LT~~
~~STA 3+171.000 TO STA 3+184.000 LT~~
STA 3+140.000 TO STA 3+170.000 RT

SNOW FENCE
STA 3+200.000 TO STA 3+280.000 RT

CONSTRUCT SPECIAL DITCH
STA 3+390.000 TO STA 3+430.000 RT
STA 3+430.000 TO STA 3+458.000 LT

VT STATE PLANE GRID

~~STA 3+100.000 TO STA 3+101.770 LT~~
~~PERMANENT SEDIMENT TRAP~~
~~SEE DETAIL SHEET 162 OF 450~~

SEE SHEET 92 OF 450

WETLAND G
CLASS II

15 m BUFFER

~~STA 3+148.500 ℄~~
~~NEW 1800 x 1970 PCCSP~~
~~SEE BRIDGE DETAILS SHEET 228 OF 450~~

~~STA 3+180.000 LT~~
~~NEW 200mm x 6M UNDERDRAIN CARRIER PIPE~~
~~W/ FLUSHING BASIN AT STA 3+180.000 LT~~

STA 3+170.000 3+172.700
STA ~~3+178.230~~ TO STA ~~3+181.770~~ LT
PERMANENT SEDIMENT TRAP
SEE DETAIL SHEET 162 OF 450

FARMLAND

65M

STA 3+180.000 TO STA 3+244.000 LT
NEW 200mm x 6M UNDERDRAIN
W/ FLUSHING BASIN AT STA 3+244.000 LT

AERIAL RELOCATION ROUTE

RR SPIKE IN POLE
US ELEV 81.963

PI 3+323.200 =
3+323.190

~~STA 3+458.230 TO STA 3+460.000 LT~~
~~PERMANENT SEDIMENT TRAP~~
~~SEE DETAIL SHEET 162 OF 450~~

STA 3+380.000 TO STA 3+460.000 LT
NEW 200mm x 80M UNDERDRAIN AT STA 3+380.000 LT
W/ FLUSHING BASIN

PT Sta 3+358.758

Sta 3+408.965 PC

7.0M

SEE SHEET 96 OF 450

AERIAL E&T — CZ — UT — C2

N61° 39' 21" E
141.113

N64° 03' 18" E
50.207

3+200 3+300 3+400

4.7M

UTILITY BOX

MATCHLINE

STA 3+100.000 RT TO STA 3+120.000 RT
NEW 200mm x 20M UNDERDRAIN

STA 3+120.000 RT TO STA 3+140.000 RT
NEW 200mm x 2M UNDERDRAIN CARRIER PIPE
W/ FLUSHING BASIN AT STA 3+120.000 RT

PT Sta 3+146.519

IP RESET LS =45'
STA 3+148.818, 1.411 RT

KEEP OUT
DO NOT DISTURB

APPROXIMATE LOCATION OF EXISTING
UNDERGROUND TELEPHONE CABLE (VERIZON)
TO BE RELOCATED AERIALLY

PC Sta 3+287.632

CURVE #10
Δ 02° 24' 00" RT
R 1698.000 M
T 71.126 M
L 35.568 M
E 0.372 M
B N/C

STA 3+348 ℄
REMOVE EXISTING 300mm x 90mm CGMP

STA 3+348 ℄
NEW 600mm x 2M CMP 152mm OR PCCSP 163mm OR CPEP
STONE FILL TYPE II AT INLET
STONE FILL TYPE II AT OUTLET (L=2.4M, D=0.6M, W=0.9M)

NEW CMP CRADLE HEADWALL AT INLET (L=2.4M, D=0.6M, W=0.9M)
NEW 600mm CPEPES AT INLET

~~STA 3+458.230 TO STA 3+460.000 RT~~
~~PERMANENT SEDIMENT TRAP~~
~~SEE DETAIL SHEET 162 OF 450~~

MATCHLINE

STA 3+178.230 TO STA 3+181.770 RT
PERMANENT SEDIMENT TRAP
SEE DETAIL SHEET 162 OF 450

0 10 20 30
SCALE IN METERS

○ DENOTES TREE OR STUMP REMOVAL

NOTES:
1. ALL SIDE ROAD RADII SHALL BE 11M UNLESS OTHERWISE NOTED. REFER TO STD B-12M
2. ALL DRIVE RADII SHALL BE 6M UNLESS OTHERWISE NOTED. REFER TO STD B-71M

STONE FILL, TYPE II
STA 3+104.800 TO STA 3+187.000 LT
STA 3+130.300 TO STA 3+160.000 RT

EROSION MATTING (JUTE)
STA 3+100.000 TO STA 3+120.000 RT
STA 3+100.000 TO STA 3+120.000 LT
STA 3+180.000 TO STA 3+213.000 LT
STA 3+182.000 TO STA 3+195.000 RT
STA 3+104.800 TO STA 3+187.000 LT
STA 3+130.300 TO STA 3+160.000 RT

ANCHOR SFOR STEEL BEAM RAIL
STA 3+184.200 LT
STA 3+125.400 RT

PROJECT NAME:	HIGHGATE - FRANKLIN
PROJECT NUMBER:	STP RS 0301(1) SA
FILE NAME: ...85c060/design/dc060bdr.dgn	PLOT DATE: 09-MAY-2005
PROJECT LEADER: DELLASANTA	DRAWN BY: SQUAD B
DESIGNED BY: SQUAD B	CHECKED BY: SQUAD B
IPARM FILE NAME: dc060107.i	SHEET 94 OF 450

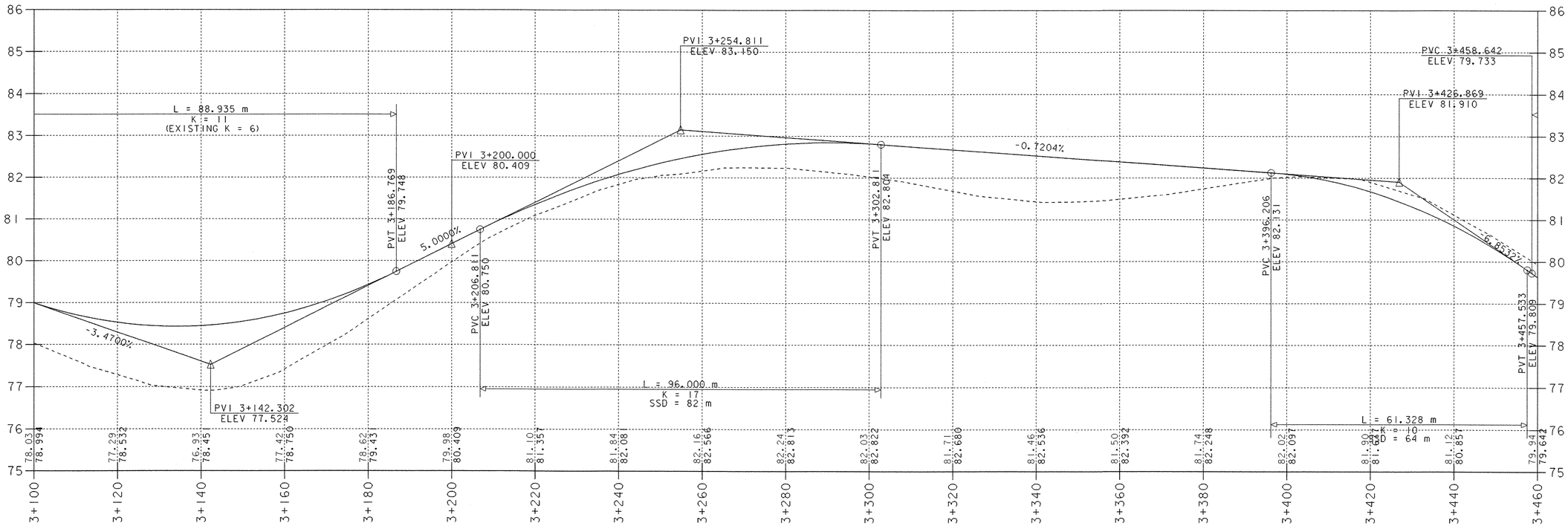

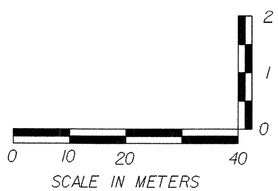

PROJECT NAME:	HIGHGATE - FRANKLIN
PROJECT NUMBER:	STP RS 0301(1) SA
FILE NAME: ...85c060/design/dc060xsl.dgn	PLOT DATE: 09-MAY-2005
PROJECT LEADER: DELLASANTA	DRAWN BY: SQUAD B
DESIGNED BY: SQUAD B	CHECKED BY: SQUAD B
IPARM FILE NAME: dc060p07.I	SHEET 95 OF 450

CONSTRUCT DRIVE
STA 3+540.000 RT GRAVEL
STA 3+549.000 LT GRAVEL
STA 3+560.000 RT GRAVEL

STEEL BEAM GUARDRAIL SEE BELOW
~~STA 3+612.857 TO STA 3+647.057 LT~~
~~STA 3+615.198 TO STA 3+683.597 RT~~

MANUFACTURED TERMINAL SECTION (TANGENTIAL)
~~STA 3+597.617 TO STA 3+612.857 LT~~ SEE BELOW
~~STA 3+647.057 TO STA 3+662.297 LT~~
~~STA 3+600.000 TO STA 3+615.198 RT~~
~~STA 3+683.597 TO STA 3+698.838 RT~~

RELOCATE MAIL BOX, SINGLE SUPPORT
STA 3+544.880 LT

~~REMOVING AND RESETTING FENCE~~
~~STA 3+465.150 LT - 4.5M BACK~~
~~STA 3+465.150 TO STA 3+505.630 LT~~
~~STA 3+505.630 LT - 6M BACK~~
~~STA 3+566.880 TO STA 3+631.920 LT~~
~~STA 3+566.880 LT - 4M BACK~~
~~STA 3+631.920 LT - 8M BACK~~

SNOW FENCE
STA 3+520.000 TO STA 3+580.000 RT

STONE FILL, TYPE II SEE BELOW
~~STA 3+597.659 TO STA 3+662.340 LT~~
~~STA 3+600.000 TO STA 3+698.880 RT~~

EROSION MATTING (JUTE) SEE BELOW
~~STA 3+597.659 TO STA 3+662.340 LT~~
~~STA 3+600.000 TO STA 3+698.880 RT~~

GRUBBING MATERIAL SEE BELOW
~~STA 3+597.659 TO STA 3+662.340 LT~~
~~STA 3+600.000 TO STA 3+698.880 RT~~

CONSTRUCT SPECIAL DITCH
STA 3+530.000 TO STA 3+546.000 LT
STA 3+543.000 TO STA 3+570.000 RT

VT STATE PLANE GRID

~~STA 3+460.000 TO STA 3+461.770 LT~~
~~PERMANENT SEDIMENT TRAP~~
~~SEE DETAIL SHEET 162 OF 450~~

~~STA 3+460.000 TO STA 3+486.000 LT~~
~~NEW 200mm x 20M UNDERDRAIN~~
~~STA 3+480.000 LT TO 3+486.000 LT~~
~~NEW 200mm x 6M UNDERDRAIN CARRIER PIPE~~
~~10M~~

~~STA 3+488 ℄~~
~~REMOVE EXISTING 600mm ACCOMP~~

WETLAND H

FARMLAND

1½SWF

~~STA 3+486.000 TO STA 3+580.000 LT~~
~~NEW 200mm x 40M UNDERDRAIN~~
~~W/ FLUSHING BASIN AT STA 3+540.000 LT~~
~~95M~~

~~STA 3+580.000 LT TO STA 3+589.000 LT~~
~~NEW 200mm x 6M UNDERDRAIN CARRIER PIPE~~
~~W/ FLUSHING BASIN AT STA 3+580.000 LT~~
~~5M~~

Sta 3+535.263 PT

100 MPL SAVE
100 MPL SAVE
100 MPL

4.0M

WETLAND I

SB21

STONE FILL, TYPE I

EXTEND EXISTING FIELD DRAIN AS NEEDED

~~STA 3+680.000~~
~~3+666.986 TO STA 3+760.000 LT~~
~~NEW 200mm x 100M UNDERDRAIN~~
~~W/ FLUSHING BASIN AT STA 3+740.000 LT~~
~~80M~~

SEE SHEET 94 OF 450

SEE SHEET 98 OF 450

MATCHLINE

AERIAL E&T

CZ

GZ

UT

3+500

3+600

3+700

N47° 27' 31" E
647.625

SB22

UTILITY BOX

RR SPIKE IN POLE
US ELEV 81.532

3.0M

7.0M

PI 3+472.559 =
3+471.669

CURVE #11
Δ 16° 35' 50" LT
R 436.000 M
L 126.298 M
T 63.594 M
E 4.613 M
B 4.400%

STA 3+486.000 ℄
75° 37' 27" LT
~~CMAP 1.91MM OR PCCSP 2.01MM OR CPEP~~
NEW 900MM x 22M CMAP 1.91MM OR PCCSP 2.01MM OR CPEP
NEW CRM CRADLE HEADWALL AT INLET (L=3.6M, D=0.6M, w=1.35M)
STONE FILL TYPE III AT INLET AND OUTLET (L=3.6M, D=0.6M, w=1.35M)
STONE FILL TYPE III AT OUTLET

~~STA 3+460.000 TO STA 3+461.770 RT~~
~~PERMANENT SEDIMENT TRAP~~
~~SEE DETAIL SHEET 162 OF 450~~

~~STA 3+548.000 TO STA 3+549.000 RT~~
NEW 200mm x 32M UNDERDRAIN
STA 3+548.000 RT
W/ FLUSHING BASIN AT STA 3+549.000 RT
NEW 200mm x 4M UNDERDRAIN CARRIER PIPE
18M

~~STA 3+549.000 RT STA 3+486.000 TO STA 3+600.000 RT~~

~~STA 3+580.000 TO STA 3+589.000 RT~~
~~NEW 200mm x 2M UNDERDRAIN CARRIER PIPE~~
~~W/ FLUSHING BASIN AT STA 3+589.000 RT~~

APPROXIMATE LOCATION OF EXISTING UNDERGROUND TELEPHONE CABLE (VERIZON) TO BE RELOCATED AERIALLY

KEEP OUT
DO NOT DISTURB

STA 3+627.500 ℄
NEW 1850 x 1850 x 1680D PRECAST CONCRETE BOX
SEE BRIDGE DETAILS SHEET 229 OF 450

FARMLAND

STONE FILL, TYPE I

AERIAL RELOCATION ROUTE

~~3+700.000~~
~~3+688.868 TO STA 3+760.000 RT~~
NEW 200MM x 88M UNDERDRAIN
60M

0 10 20 30
SCALE IN METERS

DENOTES TREE OR STUMP REMOVAL

NOTES:
1. ALL SIDE ROAD RADII SHALL BE 11M UNLESS OTHERWISE NOTED. REFER TO STD B-12M
2. ALL DRIVE RADII SHALL BE 6M UNLESS OTHERWISE NOTED. REFER TO STD B-71M

STEEL BEAM GUARDRAIL
STA 3+590.700 TO STA 3+659.300 LT
STA 3+589.400 TO STA 3+669.400 RT

MANUFACTURED TERMINAL SECTION (TANGENTIAL)
STA 3+575.500 TO STA 3+590.700 LT
STA 3+659.300 TO STA 3+674.500 LT
STA 3+574.200 TO STA 3+589.400 RT
STA 3+669.400 TO STA 3+684.600 RT

GRUBBING MATERIAL
STA 3+592.000 TO STA 3+660.000 LT
STA 3+585.000 TO STA 3+660.000 RT

STONE FILL, TYPE I
STA 3+653.000 TO STA 3+680.000 LT
STA 3+680.000 TO STA 3+760.000 LT
STA 3+667.000 TO STA 3+760.000 RT

STONE FILL, TYPE II
STA 3+592.000 TO STA 3+660.000 LT
STA 3+585.000 TO STA 3+660.000 RT

EROSION MATTING (JUTE)
STA 3+592.000 TO STA 3+660.000 LT
STA 3+585.000 TO STA 3+660.000 RT

PROJECT NAME:	HIGHGATE - FRANKLIN
PROJECT NUMBER:	STP RS 0301(1) SA
FILE NAME: ...85c060/design/dc060bdr.dgn	PLOT DATE: 09-MAY-2005
PROJECT LEADER: DELLASANTA	DRAWN BY: SQUAD B
DESIGNED BY: SQUAD B	CHECKED BY: SQUAD B
IPARM FILE NAME: dc060108.1	SHEET 96 OF 450

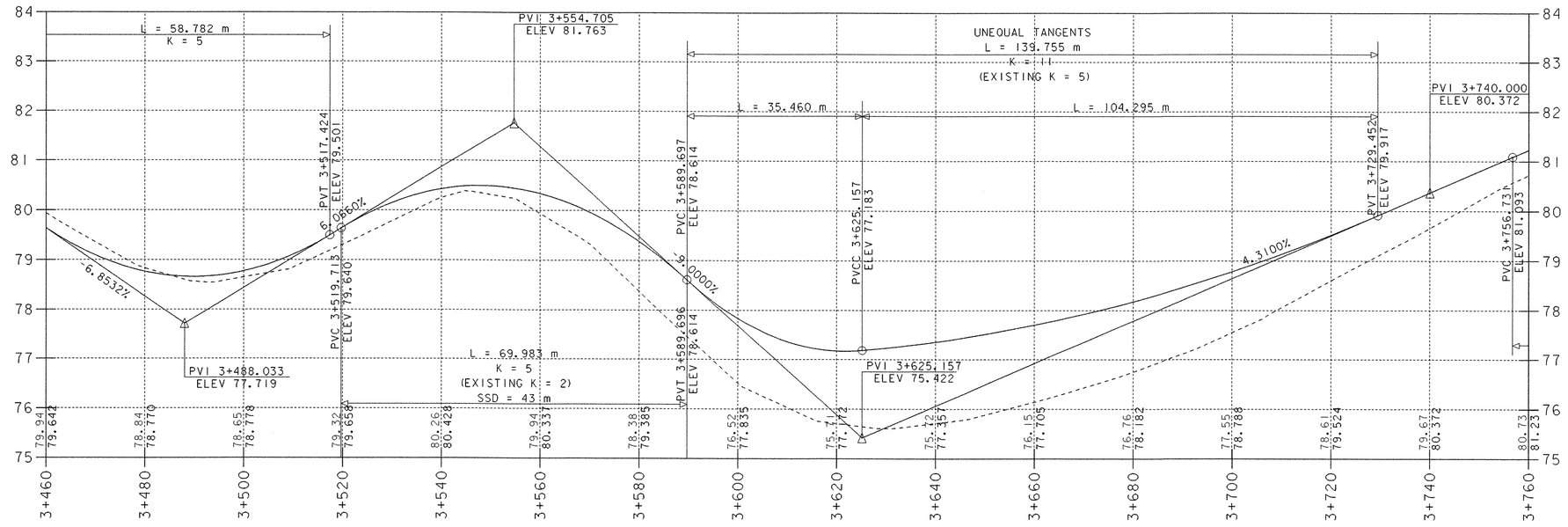

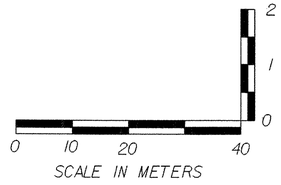

PROJECT NAME: HIGHGATE - FRANKLIN	
PROJECT NUMBER: STP RS 0301(I) SA	
FILE NAME: ...85c060/design/dc060xsl.dgn	PLOT DATE: 09-MAY-2005
PROJECT LEADER: DELLASANTA	DRAWN BY: SQUAD B
DESIGNED BY: SQUAD B	CHECKED BY: SQUAD B
IPARM FILE NAME: dc060p08.i	SHEET 97 OF 450

SLEEVES FOR UTILITIES (115 mm DIAMETER)(MOD)
STA 3+835.000 RT TO STA 20+038.748 LT

CONSTRUCT DRIVE
STA 3+772.000 LT GRAVEL
STA 3+845.000 RT GRAVEL
STA 4+086.000 RT GRAVEL

STONE FILL, TYPE I
STA 3+760.000 TO STA 3+775.000 LT
STA 3+760.000 TO STA 3+772.000 RT

CONSTRUCT SPECIAL DITCH
STA 3+810.000 TO STA 3+830.000 RT
STA 3+930.000 TO STA 4+030.000 RT

VT STATE PLANE GRID

REVISED PROPOSED UNDERGROUND SLEEVE FOR UTILITIES INSTALL WITHIN R.O.W. SEE DETAIL SHEET 68 OF 450

STONE FILL, TYPE I

STA 3+765.755 TO STA 3+776.568 LT
NEW 450mm x 11M CSP 1.63mm
REMOVE EXISTING 205mm PLASTIC FIELD CULVERT

12M

3.1M

AERIAL E&T

N63° 14' 30" W
140.000

TH #32 CONST. ℄ P.O.T. 20+030.000
END SIDELINE CONSTRUCTION
CONSTRUCT SATISFACTORY APPROACH

STA 20+004.596
BEGIN SIDELINE CONSTRUCTION

STA 3+854.6
REMOVE EXISTING 380mm CMP

FARMLAND

STA 3+760.000 TO STA 4+120.000 LT
NEW 200mm x 36M UNDERDRAIN
W/ FLUSHING BASIN AT STA 3+800.000 LT
W/ FLUSHING BASIN AT STA 3+900.000 LT
W/ FLUSHING BASIN AT STA 4+000.000 LT
W/ FLUSHING BASIN AT STA 4+100.000 LT

FARMLAND

SEE SHEET 96 OF 450

SEE SHEET 100 OF 450

MATCHLINE

UTILITY BOX

4.0M

TH #3 CONST. ℄ P.O.T. 3+841.250 =
TH #32 P.O.T. 20+000.000
SKEW = 20° 39' 51" LT

STA 3+838.491 TO STA 3+850.923 RT
NEW 450mm x 15M CSP 1.63mm

STA 3+760.000 TO STA 4+120.000 RT
NEW 200mm x 36M UNDERDRAIN
AND W/ FLUSHING BASIN AT STA 3+760.000 RT
AND W/ FLUSHING BASIN AT STA 3+800.000 RT
AND W/ FLUSHING BASIN AT STA 3+900.000 RT
AND W/ FLUSHING BASIN AT STA 4+000.000 RT
AND W/ FLUSHING BASIN AT STA 4+100.000 RT

STONE FILL, TYPE I

APPROXIMATE LOCATION OF EXISTING UNDERGROUND TELEPHONE CABLE (VERIZON) TO BE RELOCATED AERIALLY

AERIAL RELOCATION ROUTE BY VERIZON

N47° 27' 31" E
647.625

3+800 3+900 4+000 4+100

4.5M

GUY

NAIL IN POLE
US ELEV 83.787

STA 4+083.769 TO STA 4+093.699 RT
NEW 450mm x 10M CSP 1.63mm

FARMLAND

0 10 20 30
SCALE IN METERS

DENOTES TREE OR STUMP REMOVAL

NOTES:
1. ALL SIDE ROAD RADII SHALL BE 11M UNLESS OTHERWISE NOTED. REFER TO STD B-12M
2. ALL DRIVE RADII SHALL BE 6M UNLESS OTHERWISE NOTED. REFER TO STD B-7IM

PROJECT NAME:	HIGHGATE - FRANKLIN
PROJECT NUMBER:	STP RS 0301(1) SA
FILE NAME: ...85c060/design/dc060bdr.dgn	PLOT DATE: 09-MAY-2005
PROJECT LEADER: DELLASANTA	DRAWN BY: SQUAD B
DESIGNED BY: SQUAD B	CHECKED BY: SQUAD B
IPARM FILE NAME: dc060109.1	SHEET 98 OF 450

Metric

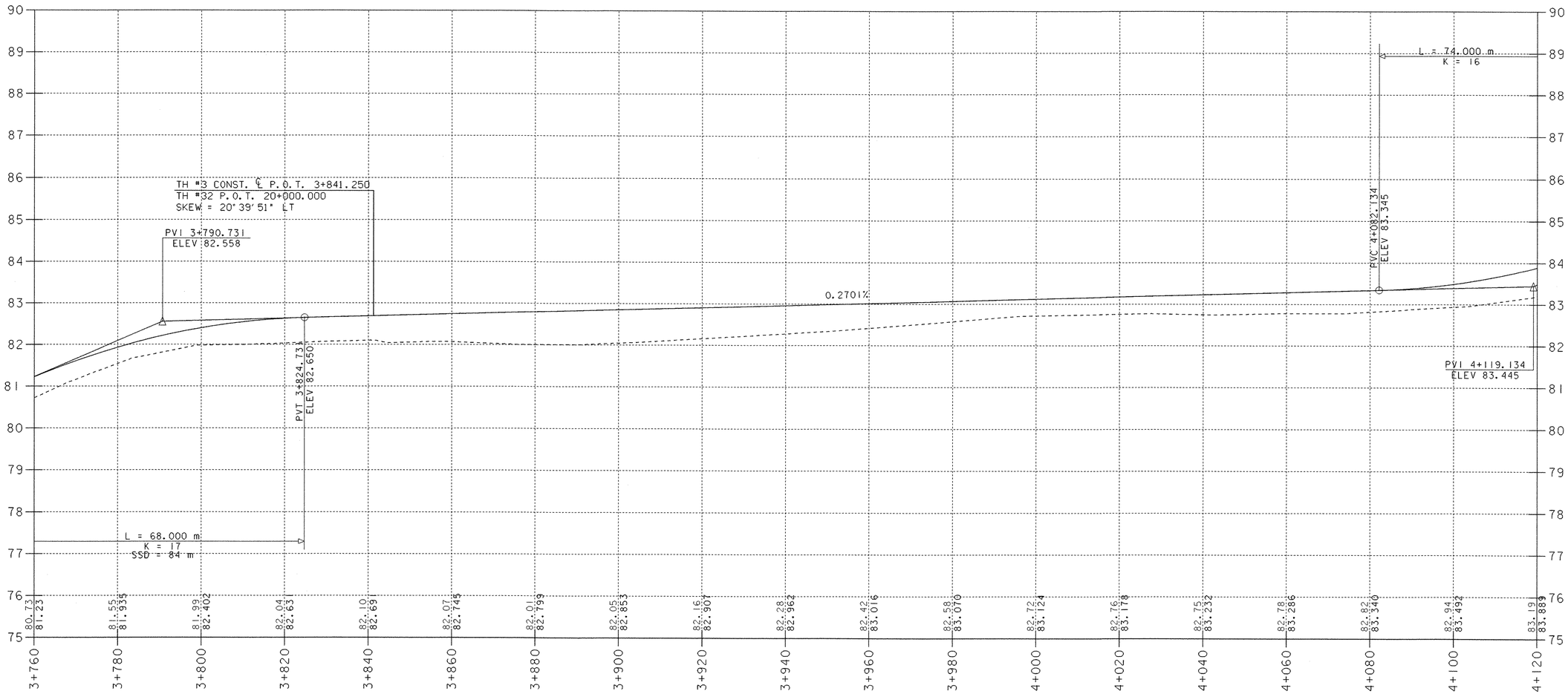

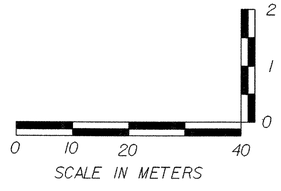

PROJECT NAME:	HIGHGATE - FRANKLIN
PROJECT NUMBER:	STP RS 0301(1) SA
FILE NAME: ...85c060/design/dc060xsl.dgn	PLOT DATE: 09-MAY-2005
PROJECT LEADER: DELLASANTA	DRAWN BY: SQUAD B
DESIGNED BY: SQUAD B	CHECKED BY: SQUAD B
IPARM FILE NAME: dc060p09.i	SHEET 99 OF 450

CONSTRUCT DRIVE
STA 4+125.000 RT GRAVEL
STA 4+255.000 LT GRAVEL
STA 4+275.000 LT GRAVEL
~~STA 4+297.000 RT GRAVEL~~
STA 4+347.000 RT GRAVEL
STA 4+390.000 LT GRAVEL
STA 4+417.000 RT GRAVEL
STA 4+225.000 RT GRAVEL

STEEL BEAM GUARDRAIL
~~STA 4+476.314 TO STA 4+480.000 LT~~

RELOCATE MAIL BOX, SINGLE SUPPORT
STA 4+305.000 LT
STA 4+421.000 LT

ANCHOR FOR STEEL BEAM RAIL
~~STA 4+476.314 LT~~

STONE FILL TYPE II
STA ~~4+477.320~~ TO STA 4+480.000 LT
4+465.000

GRUBBING MATERIAL
~~STA 4+477.320 TO STA 4+480.000 LT~~

EROSION MATTING (JUTE)
STA ~~4+477.320~~ TO STA 4+480.000 LT
4+400.000
STA 4+136.000 TO STA 4+172.000 RT

REMOVING AND RESETTING FENCE
~~STA 4+392.000 RT 3M BACK~~

CONSTRUCT SPECIAL DITCH
STA 4+230.000 TO STA 4+293.000 RT
STA 4+290.000 TO STA 4+385.500 LT
STA 4+394.500 TO STA 4+470.000 LT

STONE FILL, TYPE I
STA 4+277.000 TO STA 4+296.000 LT

VERTICAL GRANITE CURB
~~STA 4+247.960 TO STA 4+253.040 LT~~
~~STA 4+256.810 TO STA 4+272.830 LT~~
~~STA 4+276.590 TO STA 4+297.000 LT~~
STA 4+256.000 TO STA 4+270.000 LT
STA 4+277.000 TO STA 4+299.000 LT

SLEEVES FOR UTILITIES (115 mm DIAMETER)(MOD)
~~STA 4+235.000 RT TO STA 4+455.000 LT~~
STA 4+232.000 TO STA 4+390.000 RT

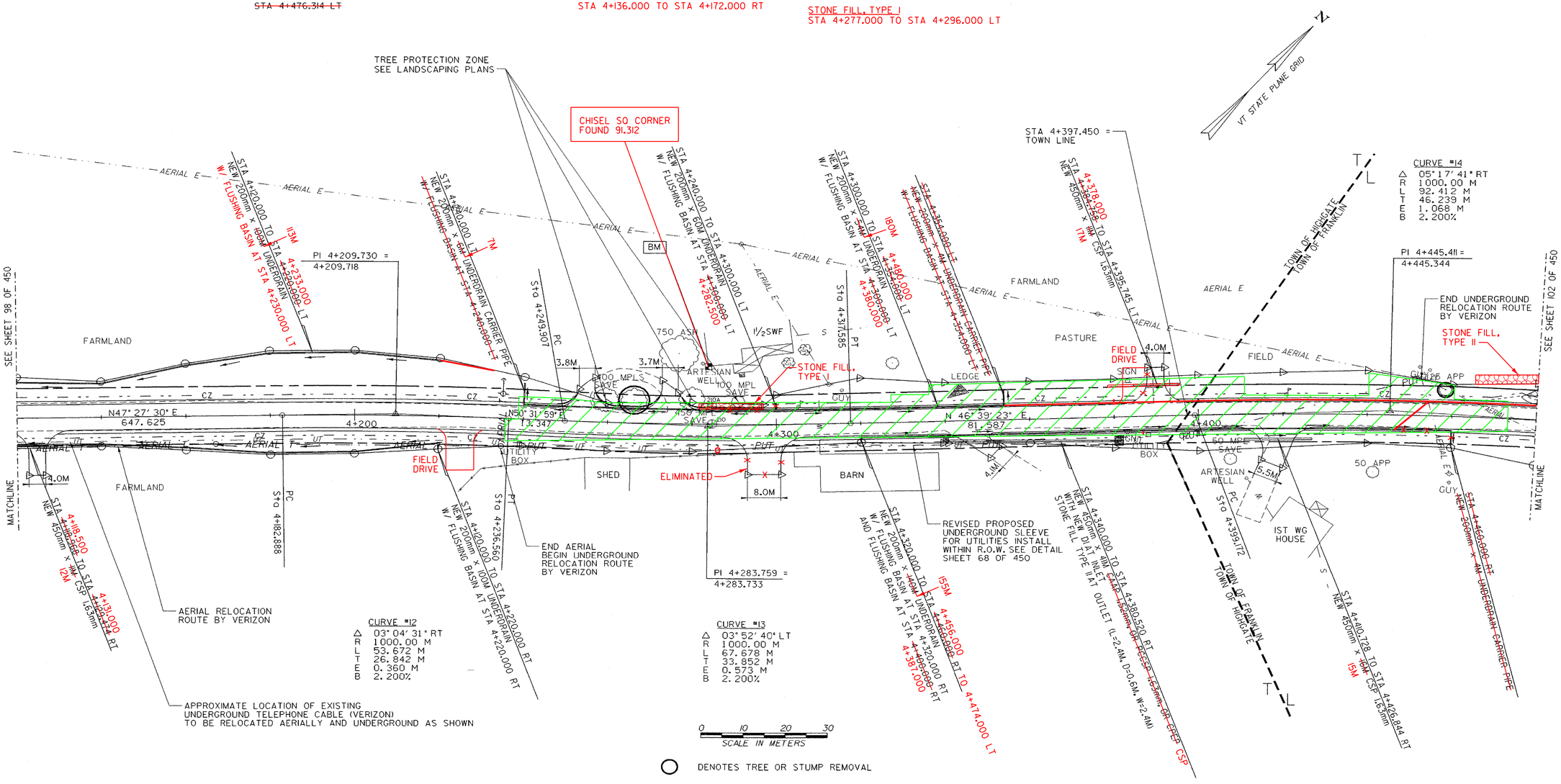

NOTES:
1. ALL SIDE ROAD RADII SHALL BE 11M UNLESS OTHERWISE NOTED. REFER TO STD B-12M
2. ALL DRIVE RADII SHALL BE 6M UNLESS OTHERWISE NOTED. REFER TO STD B-7IM

BLASTED AREA

PROJECT NAME:	HIGHGATE - FRANKLIN
PROJECT NUMBER:	STP RS 0301(1) SA
FILE NAME: ...85c060/design/dc060bdr.dgn	PLOT DATE: 09-MAY-2005
PROJECT LEADER: DELLASANTA	DRAWN BY: SQUAD B
DESIGNED BY: SQUAD B	CHECKED BY: SQUAD B
IPARM FILE NAME: dc060110.1	SHEET 100 OF 450

Metric

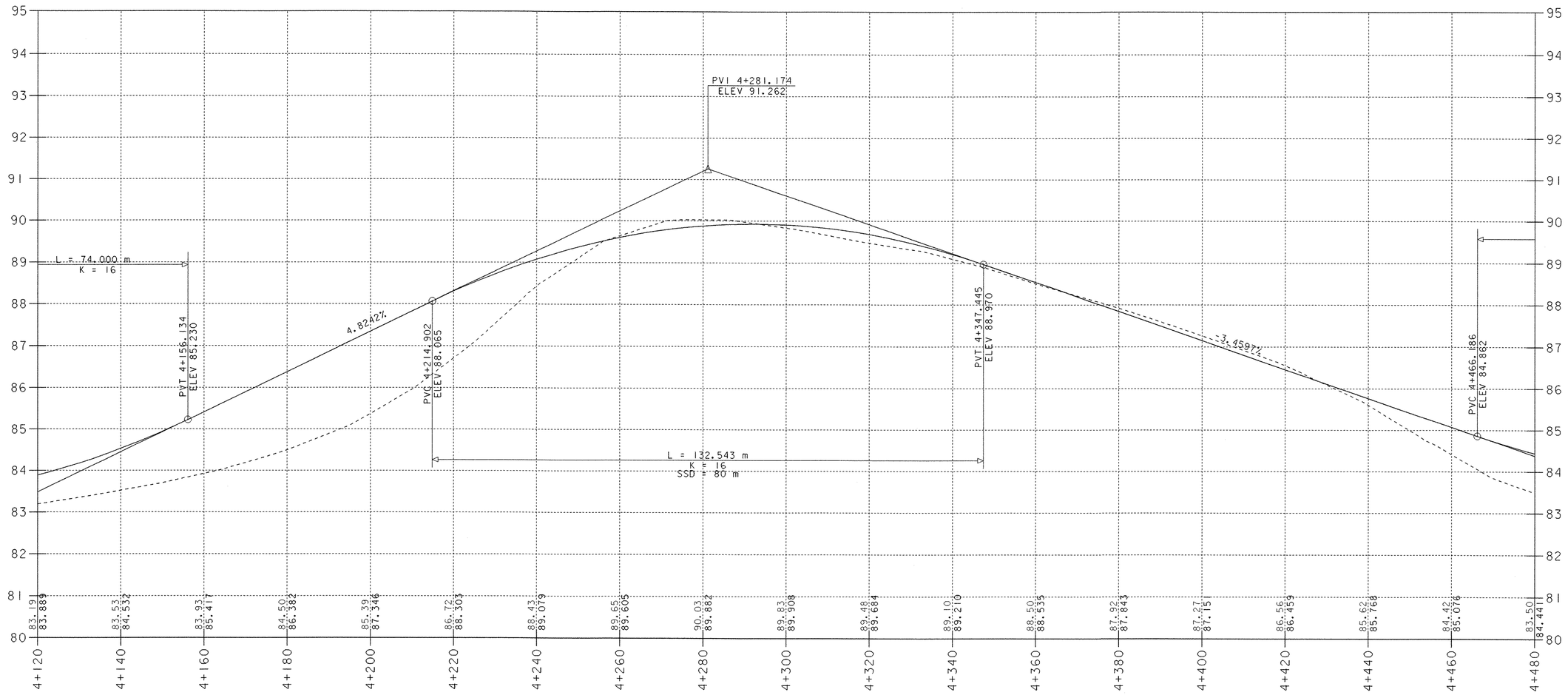

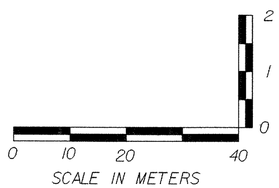

PROJECT NAME:	HIGHGATE - FRANKLIN
PROJECT NUMBER:	STP RS 0301(1) SA
FILE NAME: ...85c060/design/dc060xsl.dgn	PLOT DATE: 09-MAY-2005
PROJECT LEADER: DELLASANTA	DRAWN BY: SQUAD B
DESIGNED BY: SQUAD B	CHECKED BY: SQUAD B
IPARM FILE NAME: dc060pl01.i	SHEET 101 OF 450

STEEL BEAM GUARDRAIL
~~STA 4+480.000 TO STA 4+498.788 LT~~
~~STA 4+488.749 TO STA 4+496.130 RT~~

STONE FILL, TYPE II
STA 4+480.000 TO STA ~~4+495.150~~ 4+492.000 LT

CONSTRUCT DRIVE
~~STA 4+637.000 LT GRAVEL~~
~~STA 4+639.000 RT GRAVEL~~
STA 4+633.000 LT GRAVEL
STA 4+636.000 RT GRAVEL

EROSION MATTING (JUTE)
~~STA 4+480.000 TO STA 4+495.150 LT~~

ANCHOR FOR STEEL BEAM RAIL
~~STA 4+488.749 RT~~
~~STA 4+496.130 RT~~
~~STA 4+498.788 LT~~

GRUBBING MATERIAL
~~STA 4+480.000 TO STA 4+495.150 LT~~

SLEEVES FOR UTILITIES (115 mm DIAMETER)(MOD)
STA 4+660.000 ℄

CONSTRUCT SPECIAL DITCH
STA 4+491.500 TO STA 4+492.500 RT
STA 4+670.000 TO STA 4+750.000 LT
STA 4+790.000 TO STA 4+820.000 RT

VT STATE PLANE GRID

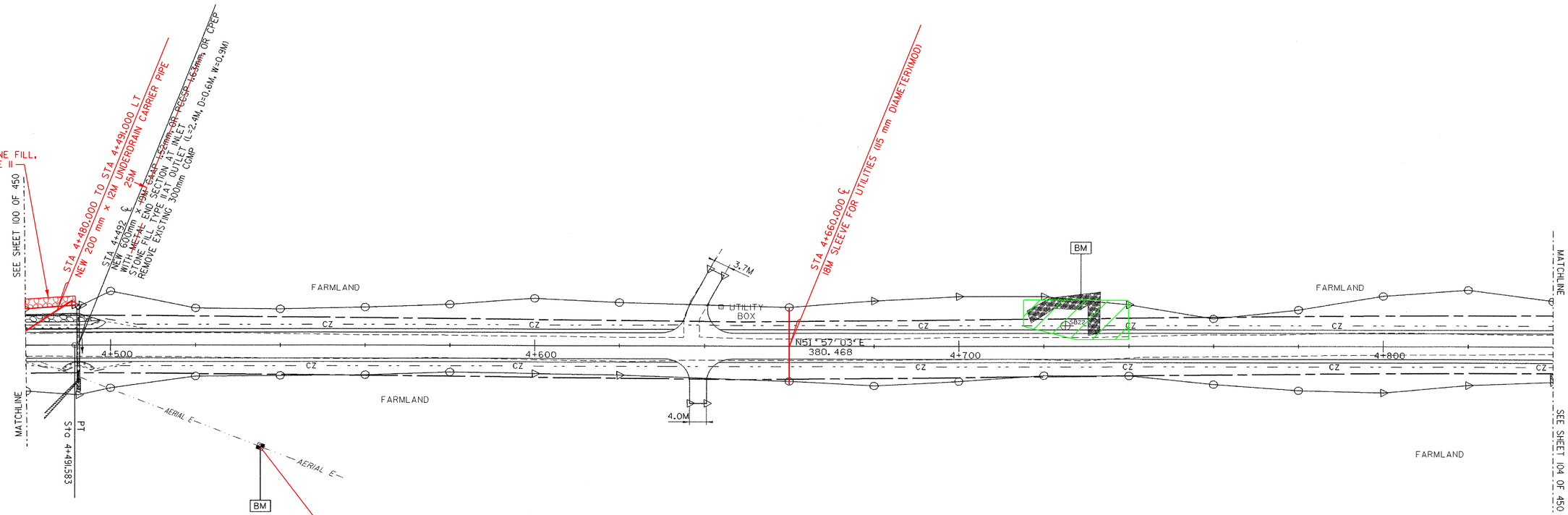

0 10 20 30
SCALE IN METERS

○ DENOTES TREE OR STUMP REMOVAL

NOTES:
1. ALL SIDE ROAD RADII SHALL BE 11M UNLESS OTHERWISE NOTED. REFER TO STD B-12M
2. ALL DRIVE RADII SHALL BE 6M UNLESS OTHERWISE NOTED. REFER TO STD B-7IM

BLASTED AREA

PROJECT NAME:	HIGHGATE - FRANKLIN
PROJECT NUMBER:	STP RS 0301(1) SA
FILE NAME: ...85c060/design/dc060bdr.dgn	PLOT DATE: 09-MAY-2005
PROJECT LEADER: DELLASANTA	DRAWN BY: SQUAD B
DESIGNED BY: SQUAD B	CHECKED BY: SQUAD B
IPARM FILE NAME: dc060111.1	SHEET 102 OF 450

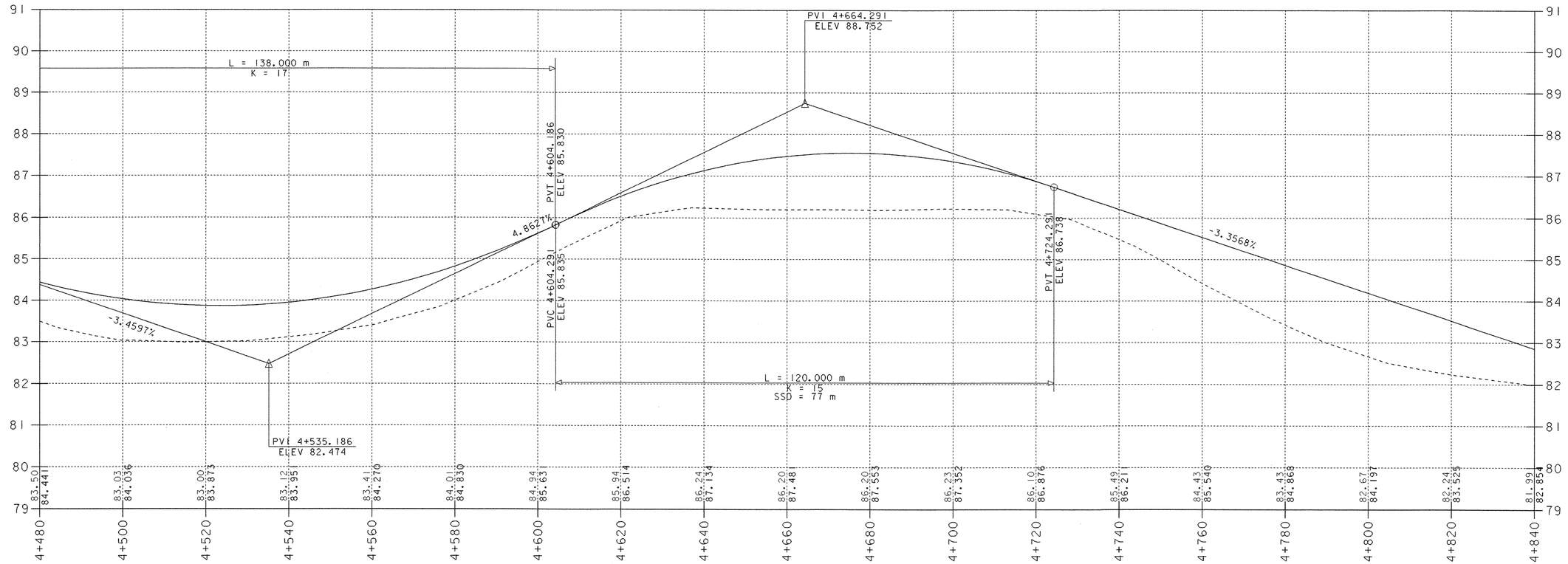

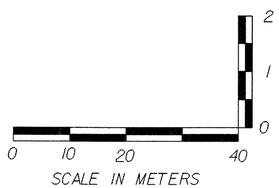

PROJECT NAME:	HIGHGATE - FRANKLIN
PROJECT NUMBER:	STP RS 0301(1) SA
FILE NAME: ...85c060/design/dc060xsl.dgn	PLOT DATE: 09-MAY-2005
PROJECT LEADER: DELLASANTA	DRAWN BY: SQUAD B
DESIGNED BY: SQUAD B	CHECKED BY: SQUAD B
IPARM FILE NAME: dc060pll.i	SHEET 103 OF 450

CONSTRUCT DRIVE
~~STA 4+847.000 LT GRAVEL~~
STA 4+847.000 RT GRAVEL
STA 4+872.000 LT GRAVEL
STA 4+935.000 LT GRAVEL
STA 4+842.000 LT GRAVEL

STONE FILL, TYPE II
~~STA 4+998.230 TO STA 5+062.740 LT~~
~~STA 5+009.649 TO STA 5+036.100 RT~~
STA 5+020.000 TO STA 5+048.000 LT
STA 5+010.000 TO STA 5+036.000 RT

STEEL BEAM GUARDRAIL
~~STA 5+013.312 TO STA 5+047.532 LT~~
~~STA 5+024.731 TO STA 5+042.267 RT~~
STA 5+011.300 TO STA 5+041.800 LT
STA 5+014.600 TO STA 5+048.900 RT

EROSION MATTING (JUTE)
~~STA 4+998.230 TO STA 5+062.740 LT~~
~~STA 5+009.649 TO STA 5+036.100 RT~~
STA 5+020.000 TO STA 5+048.000 LT

MANUFACTURED TERMINAL SECTION (TANGENT)
~~STA 4+998.071 TO STA 5+013.312 LT~~
~~STA 5+009.491 TO STA 5+024.731 RT~~
~~STA 5+047.532 TO STA 5+062.772 LT~~
STA 4+999.400 TO STA 5+014.600 RT
STA 5+041.800 TO STA 5+057.000 LT

ANCHOR FOR STEEL RAIL
~~STA 5+042.267 RT~~
STA 5+045.100 RT
STA 5+015.100 LT

CONSTRUCT SPECIAL DITCH
STA 4+820.000 TO STA 4+843.250 RT
STA 4+890.000 TO STA 4+990.000 RT
STA 5+070.000 TO STA 5+130.000 RT
STA 5+070.000 TO STA 5+130.000 LT

RELOCATE MAIL BOX, SINGLE SUPPORT
STA 4+935.500 LT

GRUBBING MATERIAL
~~STA 4+998.230 TO STA 5+062.740 LT~~
~~STA 5+009.649 TO STA 5+036.100 RT~~
STA 5+020.000 TO STA 5+048.000 LT
STA 5+010.000 TO STA 5+036.000 RT

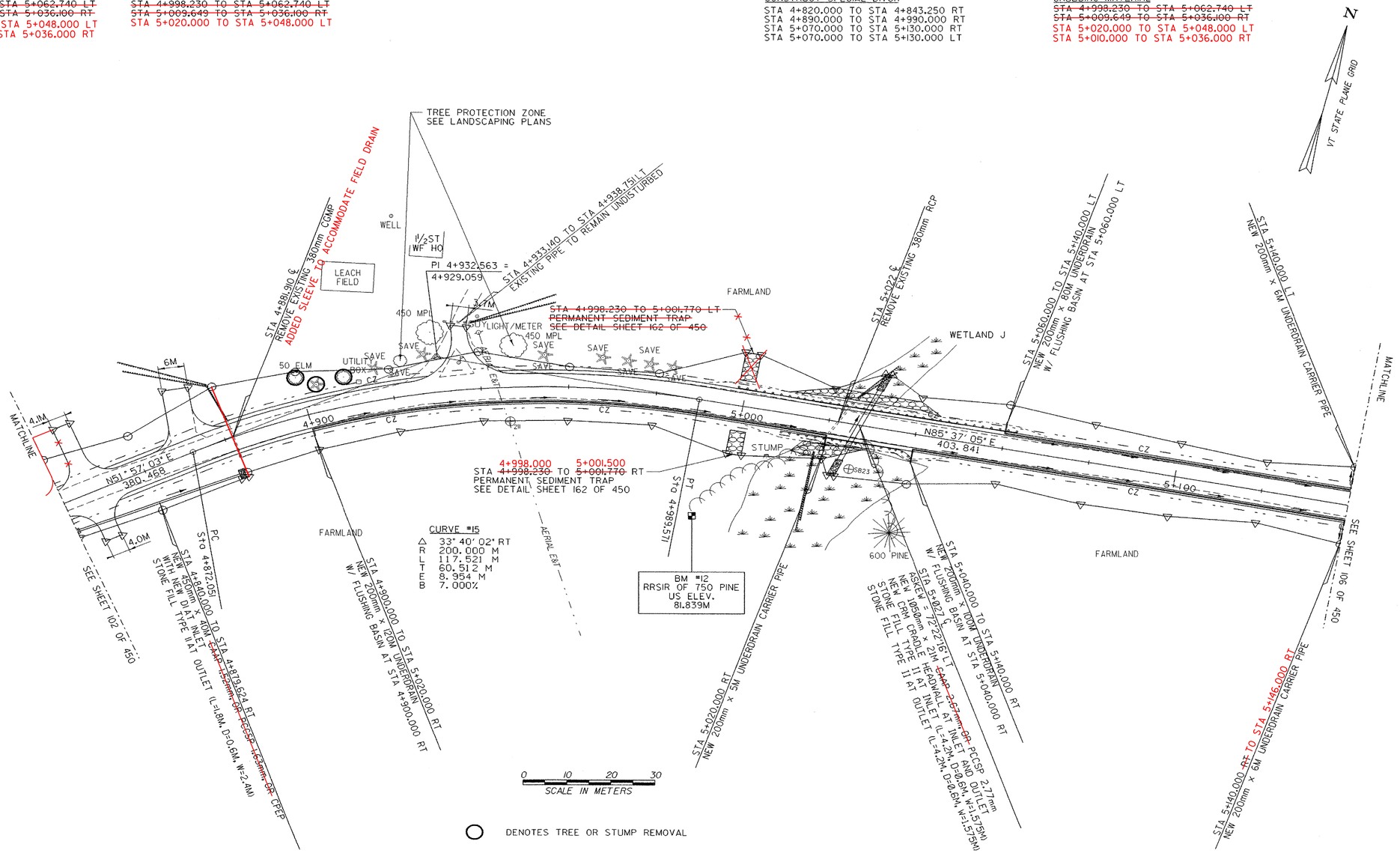

○ DENOTES TREE OR STUMP REMOVAL

NOTES:
1. ALL SIDE ROAD RADII SHALL BE 11M UNLESS OTHERWISE NOTED. REFER TO STD B-12M
2. ALL DRIVE RADII SHALL BE 6M UNLESS OTHERWISE NOTED. REFER TO STD B-7M

PROJECT NAME:	HIGHGATE - FRANKLIN
PROJECT NUMBER:	STP RS 0301(1) SA
FILE NAME: ...85c060/design/dc060bdr.dgn	PLOT DATE: 09-MAY-2005
PROJECT LEADER: DELLASANTA	DRAWN BY: SQUAD B
DESIGNED BY: SQUAD B	CHECKED BY: SQUAD B
IPARM FILE NAME: dc06012.i	SHEET 104 OF 450

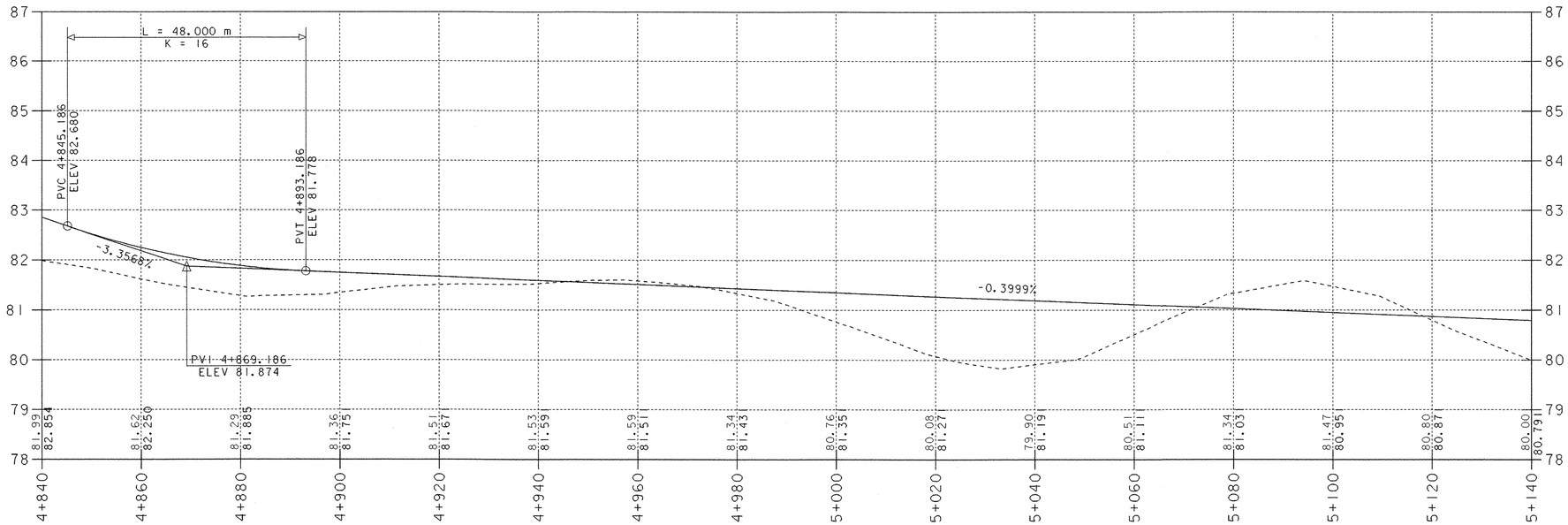

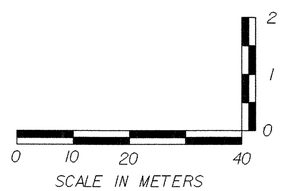

PROJECT NAME:	HIGHGATE - FRANKLIN
PROJECT NUMBER:	STP RS 0301(I) SA
FILE NAME: ...85c060/design/dc060xsl.dgn	PLOT DATE: 09-MAY-2005
PROJECT LEADER: DELLASANTA	DRAWN BY: SQUAD B
DESIGNED BY: SQUAD B	CHECKED BY: SQUAD B
IPARM FILE NAME: dc060pl2.i	SHEET 105 OF 450

CONSTRUCT DRIVE
STA 5+264.000 RT GRAVEL
STA 5+372.000 RT GRAVEL
STA 5+300.000 LT GRAVEL

STONE FILL, TYPE II
STA 5+269.500 TO STA 5+365.500 RT
STA 5+377.700 TO STA 5+420.000 RT

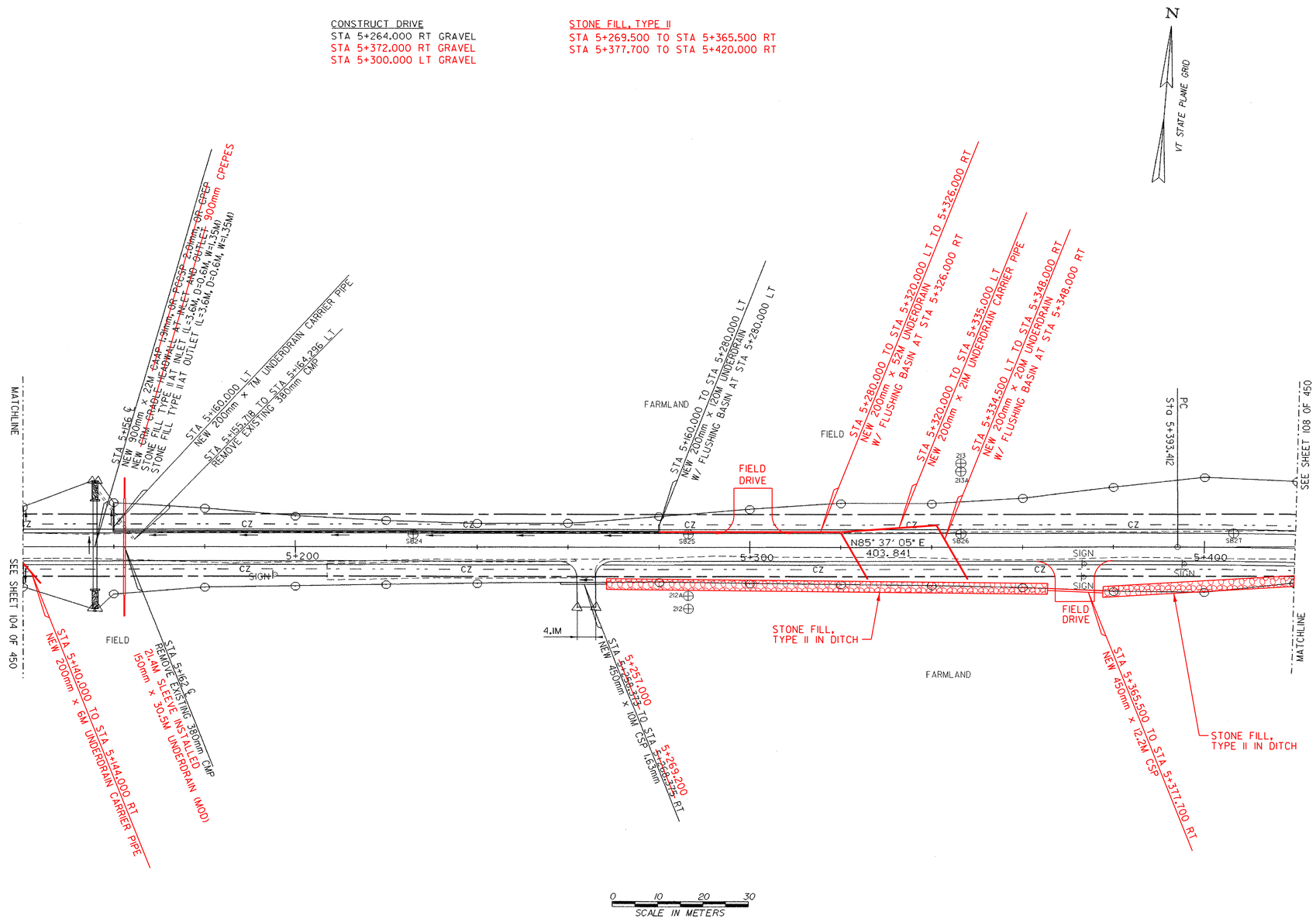

0 10 20 30
SCALE IN METERS

○ DENOTES TREE OR STUMP REMOVAL

NOTES:
1. ALL SIDE ROAD RADII SHALL BE 11M UNLESS OTHERWISE NOTED. REFER TO STD B-12M
2. ALL DRIVE RADII SHALL BE 6M UNLESS OTHERWISE NOTED. REFER TO STD B-7IM

PROJECT NAME:	HIGHGATE - FRANKLIN
PROJECT NUMBER:	STP RS 0301(1) SA
FILE NAME: ...85c060/design/dc060bdr.dgn	PLOT DATE: 09-MAY-2005
PROJECT LEADER: DELLASANTA	DRAWN BY: SQUAD B
DESIGNED BY: SQUAD B	CHECKED BY: SQUAD B
IPARM FILE NAME: dc06011 3.1	SHEET 106 OF 450

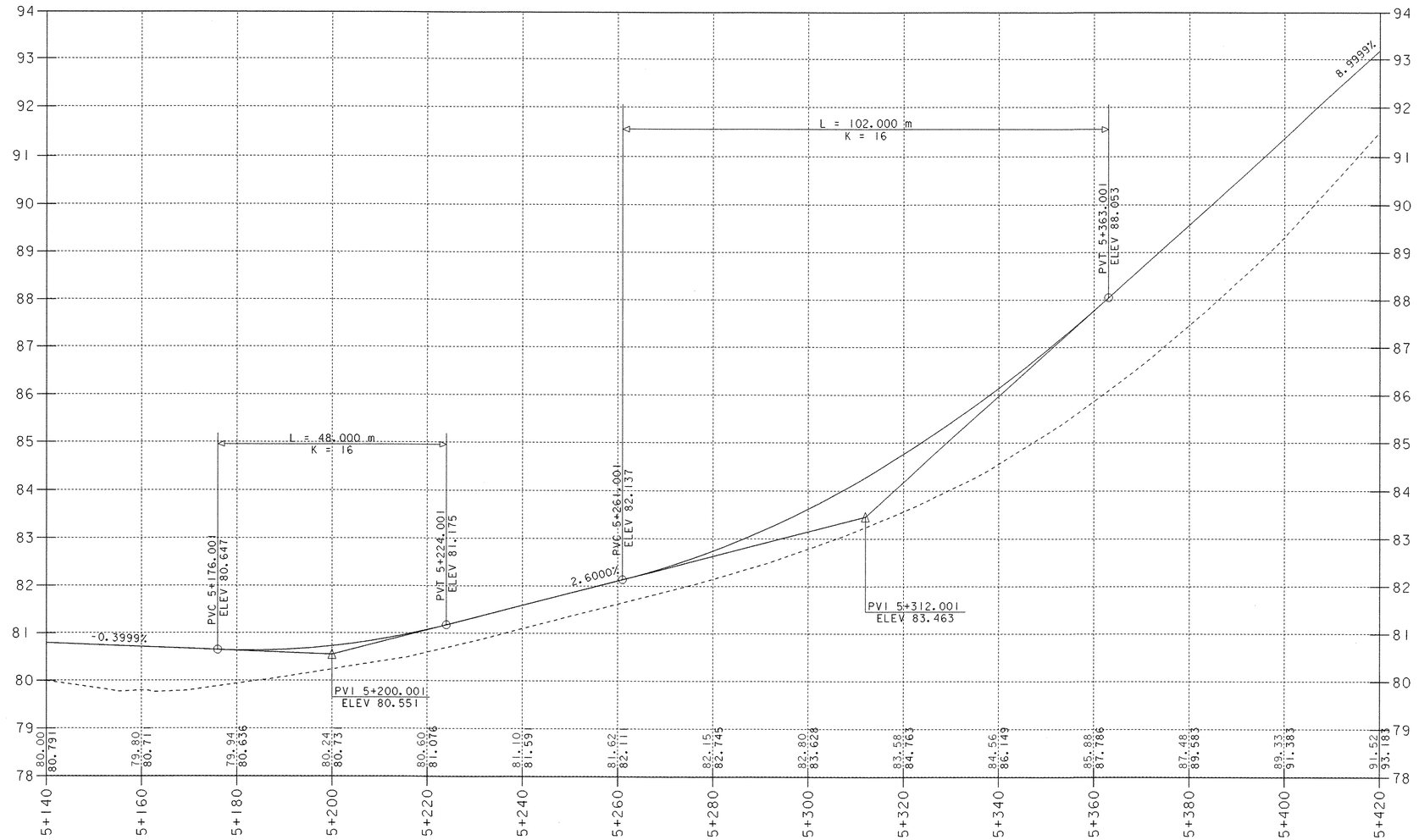

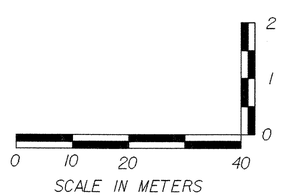

PROJECT NAME:	HIGHGATE - FRANKLIN
PROJECT NUMBER:	STP RS 0301(1) SA
FILE NAME: ...85c060/design/dc060xsl.dgn	PLOT DATE: 09-MAY-2005
PROJECT LEADER: DELLASANTA	DRAWN BY: SQUAD B
DESIGNED BY: SQUAD B	CHECKED BY: SQUAD B
IPARM FILE NAME: dc060pl3.1	SHEET 107 OF 450

CONSTRUCT DRIVE
STA ~~5+575.000~~ RT GRAVEL 5+595.000
STA 5+628.000 LT GRAVEL
STA 5+735.000 LT GRAVEL
STA 5+764.000 LT GRAVEL
STA 5+760.000 RT GRAVEL
PORTLAND CEMENT CONCRETE SIDEWALK, 125MM
STA 5+529.000 RT (3M BACK)

CONSTRUCT SPECIAL DITCH
STA 5+450.000 TO STA 5+490.000 RT
STA 5+510.000 TO STA 5+590.000 LT
STA 21+050.000 TO STA 21+055.000 RT
STA 22+005.000 TO STA 22+071.000 LT
STA 22+005.000 TO STA 22+071.000 RT
STA 5+730.000 TO STA 5+780.000 RT
STA 5+766.500 TO STA 5+780.000 LT

VERTICAL GRANITE CURB
TH #24 STA 21+060.000 LT TO ML STA 5+540.000 RT

REMOVING AND RESETTING FENCE
~~TH #15 STA 22+023.530 RT 2M BACK~~
~~TH #15 STA 22+023.530 TO STA 22+077.000 RT~~
~~STA 5+576.160 TO STA 5+600.000 LT~~

SNOW FENCE
STA 5+580.000 TO STA 5+660.000 LT

STONE FILL, TYPE II
STA 5+420.000 TO STA 5+480.000 RT

N
VT STATE PLANE GRID

STA 22+070
NEW 450mm x 10M CMP
WITH NEW DI AT INLET
NEW 450mm x 8M CMP ~~152mm OR PCCP 153mm OR RCP CLASS III OR CPEP~~
WITH NEW
STONE FILL DI AT INLET
TYPE II AT OUTLET (L=1.8M, D=0.6M, W=0.675M)
NEW 200mm x 4M UNDERDRAIN
NEW 200mm x 6M UNDERDRAIN CARRIER PIPE
7M
9M
℄

900 MPL
750 MPL
450 MPL
900 MPL
750 MPL
600 STP
AERIAL E&T
300 ASH
22+017
CZ
BM
TH #15
STUMP
1100 MPL SAVE
GUY
TH #15 CONST. L P.O.T. 22+077.000
END SIDELINE CONSTRUCTION
CONSTRUCT SATISFACTORY APPROACH
END PAVED APRON
STA 22+017.000
STA 22+004.343
BEGIN SIDLINE
CONSTRUCTION
TH #3 CONST. L P.O.T. 5+505.740 =
TH #15 P.O.T. 22+000.000
ASKEW = 81° 34' 21" LT
TH #24 P.O.T. 21+000.000
ASKEW = 98° 47' 41" RT
TREE PROTECTION ZONE
SEE LANDSCAPING PLANS
STA 5+570.000 ℄
NEW 200mm x 10M UNDERDRAIN
W/ FLUSHING BASIN AT STA 5+570.000 RT
18M
STA 5+580.000 TO STA 5+598.000
NEW 200mm x 20M UNDERDRAIN CARRIER PIPE
W/ FLUSHING BASIN AT STA 5+580.000 LT
KEEP OUT
DO NOT DISTURB
ROCK RIVER
STA 5+662 ℄
EXISTING PIPE TO REMAIN UNDISTURBED
PI 5+691.864 =
5+691.863
HO.TRAILER
APPROX. LOCATION OF LEACH FIELD
150 WILLOW
100 WILLOW
200 ASH
GAR
METER
11.0M
3.7M
AERIAL E&T
GUY
WELL
MATCHLINE
SEE SHEET 110 OF 450

STA 5+760.630 TO STA 5+766.730 LT
REMOVE EXISTING 300mm CMP
STA 5+725.000 TO STA 5+744.500 RT
REMOVE EXISTING 300mm CMP
NEW 450mm x 20M CSP
STA 5+744.500 TO STA 5+744.880 LT
NEW 450mm x 10M CMP

CURVE #18
Δ 01° 01' 02" RT
R 3500.000 M
L 62.139 M
T 31.070 M
E 0.138 M
B 3.400%

PI 5+426.540
5+426.516
SEE SHEET 106 OF 450
MATCHLINE
CZ
STA 5+480.000 RT
NEW 450mm x 20M CMP
WITH NEW DI AT INLET
AND STONE FILL TYPE II AT OUTLET
28M
TO STA 21+007.951 LT
W/ FLUSHING BASIN AT STA 5+480.000 RT
29M
STA 5+537.000
NEW 200mm x 6M UNDERDRAIN
W/ FLUSHING BASIN AT STA 5+537.000
43M
STA 5+580.000
NEW 200mm x 6M UNDERDRAIN
W/ FLUSHING BASIN AT STA 5+580.000 LT
STA 5+451.000
NEW 200mm x 2M UNDERDRAIN
W/ FLUSHING BASIN AT STA 5+480.000 RT
12M
STA 5+451.000 ℄
NEW 200mm x 4M UNDERDRAIN
NEW 200mm x 6M UNDERDRAIN CARRIER PIPE
N89° 24' 46" E
78.730
5+500
5+538.375
PC
5+547.759
PT
5+600
N85° 04' 45" E
113.036
5+700
5+722.933
PCC
STA 5+720.000
END VARIED SHOULDER
END FINE GRADING AND PAVING ONLY
MATCH EXISTING GRADE
BRUSH
STA 21+004.351
BEGIN SIDELINE
CONSTRUCTION
SIGN
LEDGE
APPROX. LOCATION OF LEACH FIELD
LIGHT/ METER
TRAILER
TH #24
21+070
375 APP
BM
CHISEL SQ
101.537
SILO
2½ STORY BRICK HOUSE
DRIVE
FIELD DRIVE
PI 5+543.069 =
5+543.065
CURVE #16
Δ 03° 47' 41" RT
R 1000.000 M
L 66.232 M
T 33.128 M
E 0.549 M
B 2.200%
STONE FILL, TYPE II
CURVE #17
Δ 04° 20' 02" LT
R 124.062 M
L 9.384 M
T 4.694 M
E 0.089 M
B 5.600%
FARMLAND
WETLAND K
CLASS II
BULLIS POND
RR SPIKE IN POLE 92.398
WOODS
LAWN
BRUSH
(2) 350 ELMS
FIELD
STA 5+753.900 TO STA 5+766.100 RT
NEW 450mm x 12.2M CSP
STA 5+600.000
BEGIN VARIED SHOULDER
BEGIN FINE GRADING AND PAVING ONLY
MATCH EXISTING GRADE
CONSTRUCT CONCRETE SIDEWALK WITH
MINIMUM DISTURBANCE TO ROOTS OF MAPLES
TH #24 CONST. L P.O.T. 21+060.000
END SIDELINE CONSTRUCTION
CONSTRUCT SATISFACTORY APPROACH
TREE PROTECTION ZONE
SEE LANDSCAPING PLANS

○ DENOTES TREE OR STUMP REMOVAL

BLASTED AREA

0 10 20 30
SCALE IN METERS

NOTES:
1. ALL SIDE ROAD RADII SHALL BE 11M UNLESS OTHERWISE NOTED. REFER TO STD B-12M
2. ALL DRIVE RADII SHALL BE 6M UNLESS OTHERWISE NOTED. REFER TO STD B-7IM

PROJECT NAME:	HIGHGATE - FRANKLIN
PROJECT NUMBER:	STP RS 0301(1) SA
FILE NAME: ...85c060/design/dc060bdr.dgn	PLOT DATE: 09-MAY-2005
PROJECT LEADER: DELLASANTA	DRAWN BY: SQUAD B
DESIGNED BY: SQUAD B	CHECKED BY: SQUAD B
IPARM FILE NAME: dc060114.i	SHEET 108 OF 450

VAOT Metric

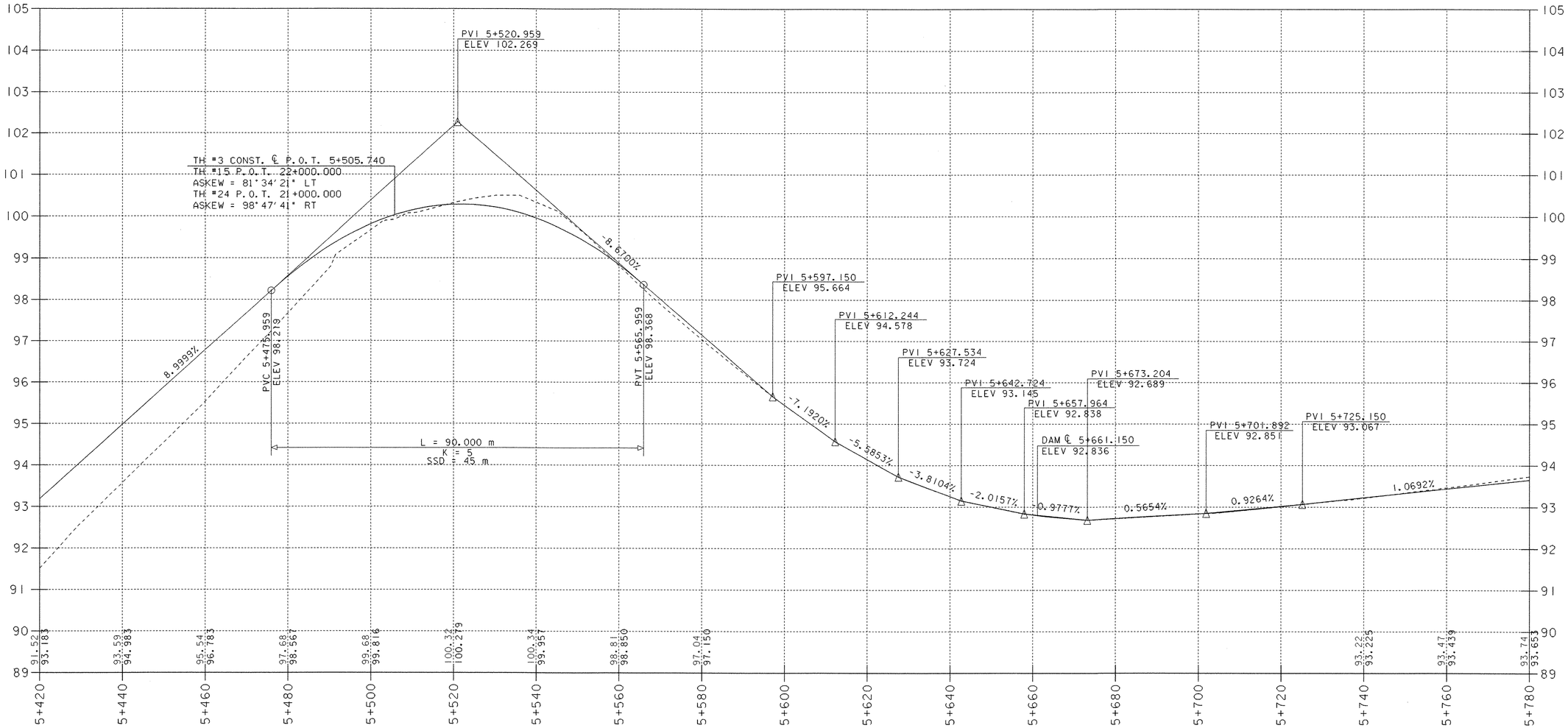

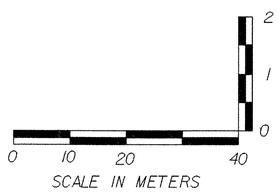

PROJECT NAME:	HIGHGATE - FRANKLIN
PROJECT NUMBER:	STP RS 0301(1) SA
FILE NAME: ...85c060/design/dc060xsl.dgn	PLOT DATE: 09-MAY-2005
PROJECT LEADER: DELLASANTA	DRAWN BY: SQUAD B
DESIGNED BY: SQUAD B	CHECKED BY: SQUAD B
IPARM FILE NAME: dc060pl4.i	SHEET 109 OF 450

CONSTRUCT DRIVE
STA 6+024.000 LT GRAVEL
STA 6+032.000 RT GRAVEL

REMOVING AND RESETTING FENCE
~~STA 5+976.000 LT 5M BACK~~
~~STA 5+976.000 TO STA 6+017.000 LT~~
~~STA 6+017.000 LT 3M BACK~~

CONSTRUCT SPECIAL DITCH
STA 5+780.000 TO STA 5+840.000 LT
STA 5+780.000 TO STA 5+810.000 RT
STA 5+950.000 TO STA 6+030.000 RT
STA 6+010.000 TO STA 6+020.000 LT

N

VT STATE PLANE GRID

CURVE #19
Δ 00° 34' 13" RT
R 15434.870 M
L 153.626 M
T 76.814 M
E 0.191 M
B 3.400%

STA 5+780.000 TO STA 5+820.000 LT
NEW 200mm x 40M UNDERDRAIN
W/ FLUSHING BASIN AT 5+780.000 LT

STA 5+820.000 ℄
NEW 1200mm x 74M UNDERDRAIN CARRIER PIPE
25M

PI 5+799.747 =
5+799.745

AERIAL E&T

300 MPL
BRUSH
300 MPL

WETLAND L

FARMLAND

5+917.000
~~STA 5+918.230~~ TO STA ~~5+921.770~~ 5+922.000 LT
PERMANENT SEDIMENT TRAP
SEE DETAIL SHEET 162 OF 450

STA 5+380.000 ℄
NEW 200mm x 12M UNDERDRAIN CARRIER PIPE AT OUTLET
NEW 200mm x 8M UNDERDRAIN
6M

PI 5+999.299 =
5+998.634

WOODS
BM
LEDGE
STUMP
5.1M

RR SPIKE
IN ROOT
99.205

STA 5+380.000 TO STA 6+040.000 LT
NEW 200mm x 60M UNDERDRAIN
W/ FLUSHING BASIN AT 6+040.000 LT

SEE SHEET 112 OF 450

MATCHLINE

SEE SHEET 108 OF 450

STA 5+780.000 TO STA 5+820.000 RT
NEW 200mm x 40M UNDERDRAIN
W/ FLUSHING BASIN AT 5+780.000 RT

STA 5+843.6
ASKEW 60° RT
NEW 600mm x 56M CMP
WITH METAL END SECTION AT INLET
STONE FILL TYPE II AT INLET
STONE FILL TYPE II AT OUTLET

2M

STA 5+848.6
REMOVE EXISTING 300mm ACCSXP

STA 5+876.559 PT

FARMLAND

5+800
5+900
6+000
6+100

CZ
SIGN

N86° 40' 00" E
105.374

N 86° 00' 11" E
123.968

SB28
SB29

STA 5+981.933 PC

3-200 APP

STA 6+016.666

LEDGE
LEDGE

FIELD
DRIVE

FIELD

FARMLAND

MATCHLINE

CURVE #20
Δ 00° 39' 48" LT
R 3000.000 M
L 34.732 M
T 17.366 M
E 0.050 M
B 3.400%

STA 5+980.000 TO STA 6+040.000 RT
NEW 200mm x 60M UNDERDRAIN
W/ FLUSHING BASIN AT 6+040.000 RT

0 10 20 30
SCALE IN METERS

○ DENOTES TREE OR STUMP REMOVAL

NOTES:
1. ALL SIDE ROAD RADII SHALL BE 11M UNLESS OTHERWISE NOTED. REFER TO STD B-12M
2. ALL DRIVE RADII SHALL BE 6M UNLESS OTHERWISE NOTED. REFER TO STD B-7IM

BLASTED AREA

PROJECT NAME: HIGHGATE - FRANKLIN
PROJECT NUMBER: STP RS 0301(1) SA

FILE NAME: ...85c060/design/dc060bdr.dgn
PROJECT LEADER: DELLASANTA
DESIGNED BY: SQUAD B
IPARM FILE NAME: dc06011S.1
PLOT DATE: 09-MAY-2005
DRAWN BY: SQUAD B
CHECKED BY: SQUAD B
SHEET 110 OF 450

Metric

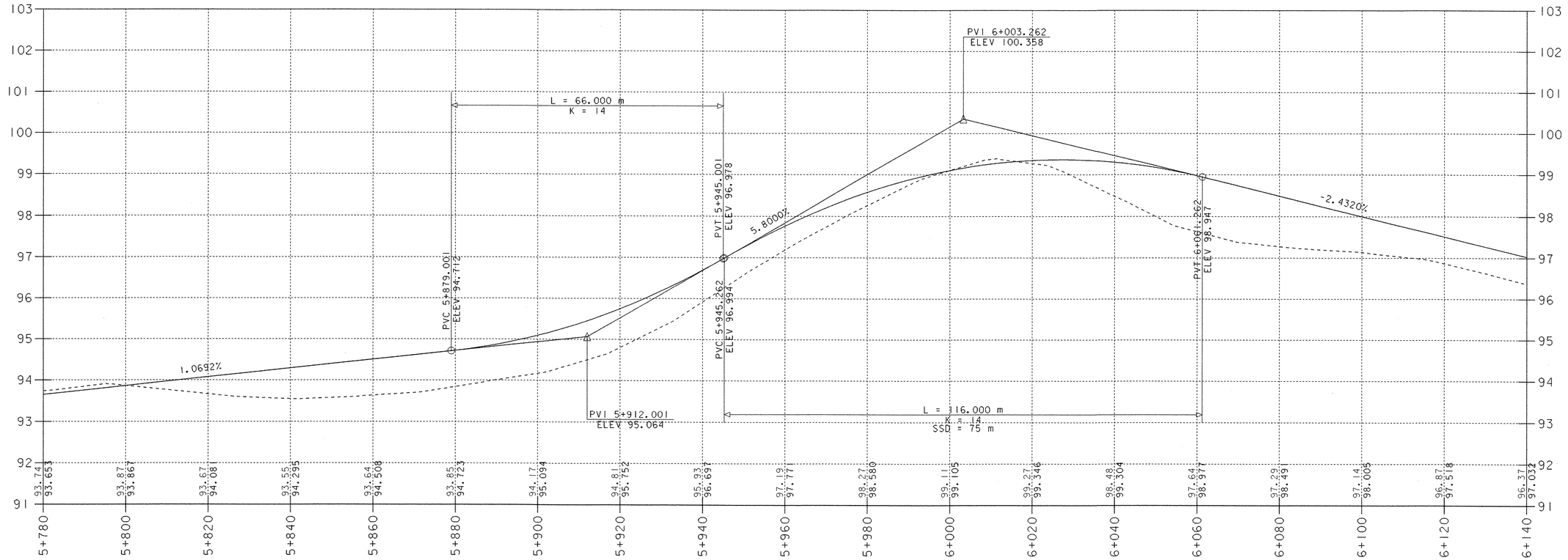

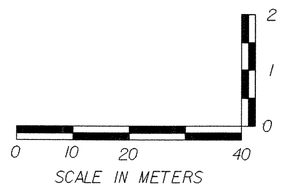

PROJECT NAME:	HIGHGATE - FRANKLIN
PROJECT NUMBER:	STP RS 0301(1) SA
FILE NAME: ...85c060/design/dc060xsl.dgn	PLOT DATE: 09-MAY-2005
PROJECT LEADER: DELLASANTA	DRAWN BY: SQUAD B
DESIGNED BY: SQUAD B	CHECKED BY: SQUAD B
IPARM FILE NAME: dc060pl5.i	SHEET III OF 450

CONSTRUCT DRIVE
STA 6+150.000 RT GRAVEL
STA 6+386.000 LT GRAVEL
STA 6+386.000 RT GRAVEL
STA 6+150.000 LT GRAVEL

STEEL BEAM GUARDRAIL
~~STA 6+151.067 TO STA 6+230.803 LT~~
~~STA 6+151.957 TO STA 6+229.209 RT~~
STA 6+150.500 TO STA 6+219.000 LT
STA 6+155.400 TO STA 6+208.700 RT

ANCHOR FOR STEEL BEAM RAIL
~~STA 6+151.067 LT~~
~~STA 6+151.957 RT~~
~~STA 6+229.209 RT~~
~~STA 6+230.803 LT~~
STA 6+154.300 LT
STA 6+159.200 RT
STA 6+204.900 RT
STA 6+215.200 LT

CONSTRUCT SPECIAL DITCH
STA 6+161.770 TO STA 6+280.000 LT
STA 6+160.000 TO STA 6+270.000 RT
STA 6+370.000 TO STA 6+380.000 RT
STA 6+430.000 TO STA 6+440.000 LT
STA 6+430.000 TO STA 6+440.000 RT

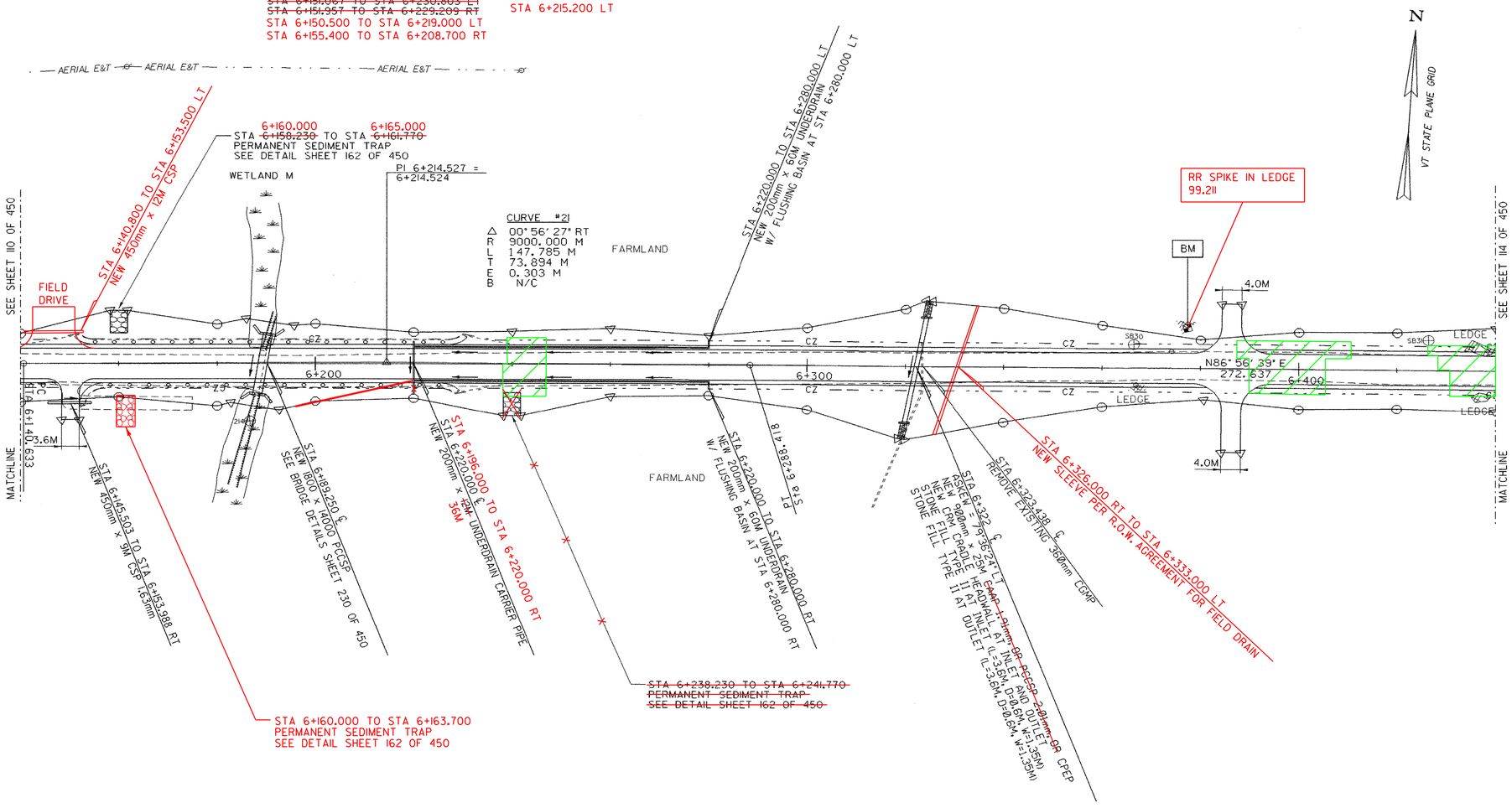

0 10 20 30
SCALE IN METERS

○ DENOTES TREE OR STUMP REMOVAL

NOTES:

1. ALL SIDE ROAD RADII SHALL BE 11M UNLESS OTHERWISE NOTED. REFER TO STD B-12M
2. ALL DRIVE RADII SHALL BE 6M UNLESS OTHERWISE NOTED. REFER TO STD B-71M

BLASTED AREA

PROJECT NAME:	HIGHGATE - FRANKLIN
PROJECT NUMBER:	STP RS 0301(1) SA
FILE NAME: ...85c060/design/dc060bdr.dgn	PLOT DATE: 09-MAY-2005
PROJECT LEADER: DELLASANTA	DRAWN BY: SQUAD B
DESIGNED BY: SQUAD B	CHECKED BY: SQUAD B
IPARM FILE NAME: dc060116.i	SHEET 112 OF 450

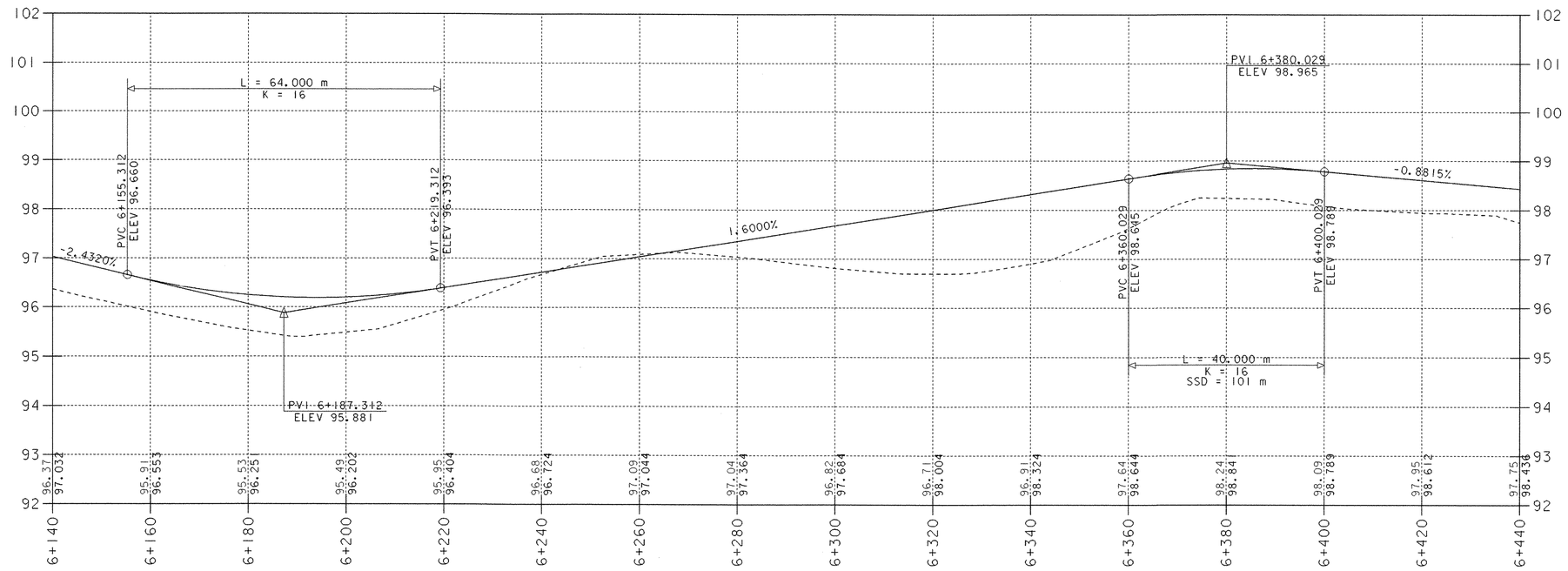

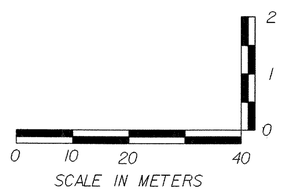

PROJECT NAME:	HIGHGATE - FRANKLIN
PROJECT NUMBER:	STP RS 0301(1) SA
FILE NAME: ...85c060/design/dc060xsl.dgn	PLOT DATE: 09-MAY-2005
PROJECT LEADER: DELLASANTA	DRAWN BY: SQUAD B
DESIGNED BY: SQUAD B	CHECKED BY: SQUAD B
IPARM FILE NAME: dc060pl6.i	SHEET 113 OF 450

CONSTRUCT DRIVE
STA 6+507.000 RT GRAVEL
STA 6+513.000 LT GRAVEL
STA 6+541.000 LT GRAVEL
STA 6+658.000 LT GRAVEL
~~TH #25 STA 23+016.000 RT GRAVEL~~
~~TH #25 STA 23+040.000 RT GRAVEL~~

REMOVING AND RESETTING FENCE
~~TH #25 STA 23+014.000 TO TH #25 STA 23+056.000 LT~~
~~STA 6+630.000 TO STA 6+720.000 RT~~

RELOCATE MAIL BOX, SINGLE SUPPORT
STA 6+662.104 RT
TH #25 STA 23+050.000 RT

CONSTRUCT SPECIAL DITCH
STA 6+440.000 TO STA 6+450.000 LT
STA 6+440.000 TO STA 6+450.000 RT
STA 6+710.000 TO STA 6+720.000 LT

STONE FILL, TYPE II
STA 6+585.000 TO STA 6+617.000 LT

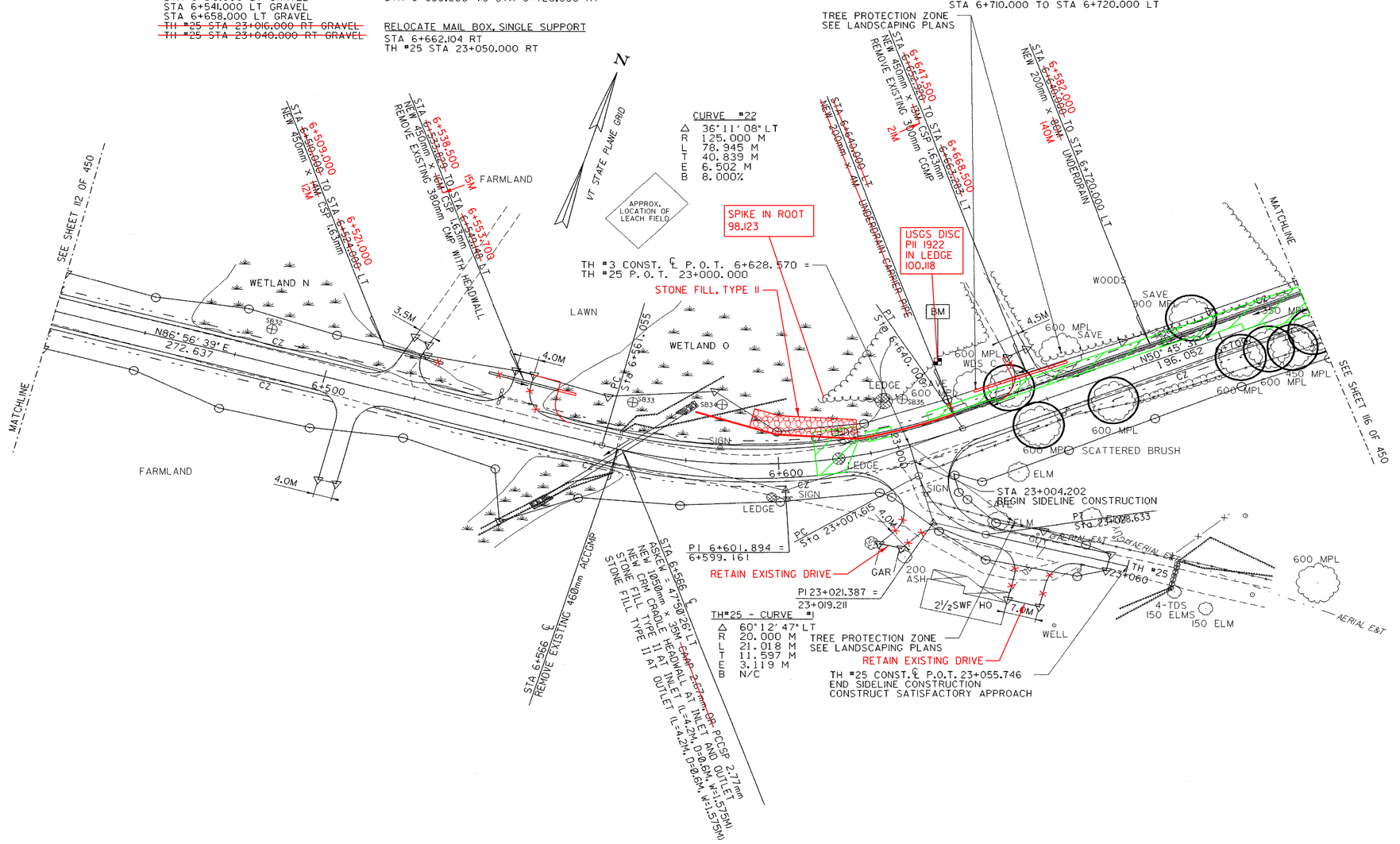

0 10 20 30
SCALE IN METERS

○ DENOTES TREE OR STUMP REMOVAL

NOTES:
1. ALL SIDE ROAD RADII SHALL BE 11M UNLESS OTHERWISE NOTED. REFER TO STD B-12M
2. ALL DRIVE RADII SHALL BE 6M UNLESS OTHERWISE NOTED. REFER TO STD B-71M

BLASTED AREA

PROJECT NAME:	HIGHGATE - FRANKLIN
PROJECT NUMBER:	STP RS 0301(1) SA
FILE NAME: ...85c060/design/dc060bdr.dgn	PLOT DATE: 09-MAY-2005
PROJECT LEADER: DELLASANTA	DRAWN BY: SQUAD B
DESIGNED BY: SQUAD B	CHECKED BY: SQUAD B
IPARM FILE NAME: dc06011 7.i	SHEET 114 OF 450

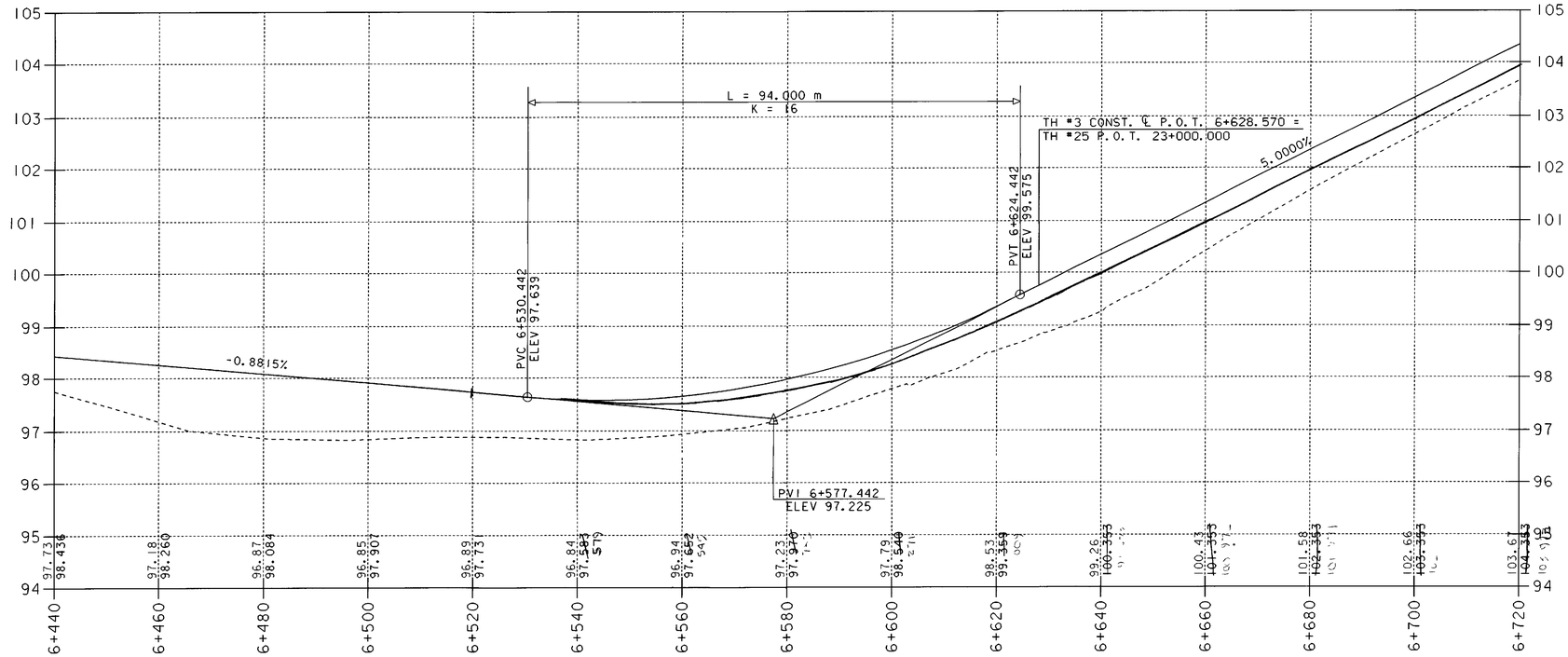

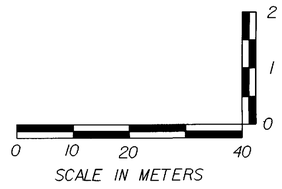

PROJECT NAME:	HIGHGATE - FRANKLIN
PROJECT NUMBER:	STP RS 0301(1) SA
FILE NAME: ...85c060/design/dc060xsl.dgn	PLOT DATE: 09-MAY-2005
PROJECT LEADER: DELLASANTA	DRAWN BY: SQUAD B
DESIGNED BY: SQUAD B	CHECKED BY: SQUAD B
IPARM FILE NAME: dc060pl7.I	SHEET 115 OF 450

MANUFACTURED TERMINAL SECTION (TANGENTIAL)
~~STA 6+885.920 TO STA 6+901.097 RT~~
STA 6+882.000 TO STA 6+897.200 RT

STEEL BEAM GUARDRAIL
STA ~~6+901.097~~ TO STA 7+080.000 RT
6+897.200

CONSTRUCT DRIVE
STA 6+774.000 LT GRAVEL
STA 6+790.000 RT GRAVEL
STA 6+810.000 RT GRAVEL
STA 6+830.000 RT GRAVEL
STA 6+840.000 LT GRAVEL
~~STA 7+030.000 LT GRAVEL~~
~~STA 7+053.000 LT GRAVEL~~
STA 7+020.000 LT GRAVEL
STA 7+036.000 LT GRAVEL

RELOCATE MAIL BOX, SINGLE SUPPORT
STA 6+778.020 RT
STA 6+804.700 RT

REMOVING AND RESETTING FENCE
~~STA 6+720.000 TO STA 6+737.790 RT~~
~~STA 6+737.790 RT 3.0M BACK~~
~~STA 6+816.140 RT 2.6M BACK~~

CONSTRUCT SPECIAL DITCH
STA 6+720.000 TO STA 6+769.000 LT
STA 6+775.000 TO STA 6+825.000 RT
STA 6+845.000 TO STA 6+950.000 LT
STA 7+057.000 TO STA 7+070.000 LT

STONE FILL, TYPE II
STA ~~6+885.920~~ TO STA 7+080.000 RT
6+909.000

EROSION MATTING (JUTE)
STA ~~6+885.920~~ TO STA 7+080.000 RT
6+909.000

GRUBBING MATERIAL
STA ~~6+885.920~~ TO STA 7+080.000 RT
6+909.000

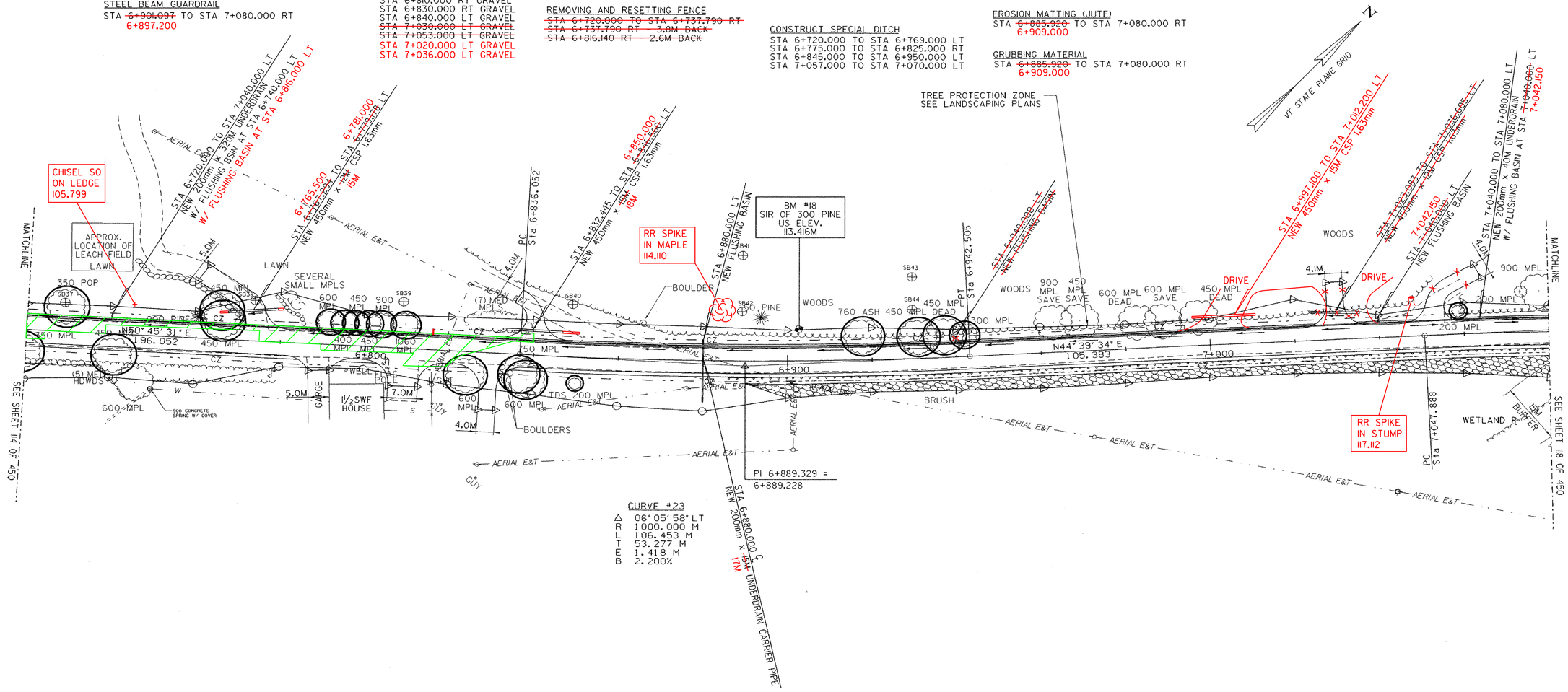

○ DENOTES TREE OR STUMP REMOVAL

NOTES:
1. ALL SIDE ROAD RADII SHALL BE 11M UNLESS OTHERWISE NOTED. REFER TO STD B-12M
2. ALL DRIVE RADII SHALL BE 6M UNLESS OTHERWISE NOTED. REFER TO STD B-71M

BLASTED AREA

PROJECT NAME:	HIGHGATE - FRANKLIN
PROJECT NUMBER:	STP RS 0301(1)SA
FILE NAME: ...85c060/design/dc060bdr.dgn	PLOT DATE: 09-MAY-2005
PROJECT LEADER: DELLASANTA	DRAWN BY: SQUAD B
DESIGNED BY: SQUAD B	CHECKED BY: SQUAD B
IPARM FILE NAME: dc060118.i	SHEET 116 OF 450

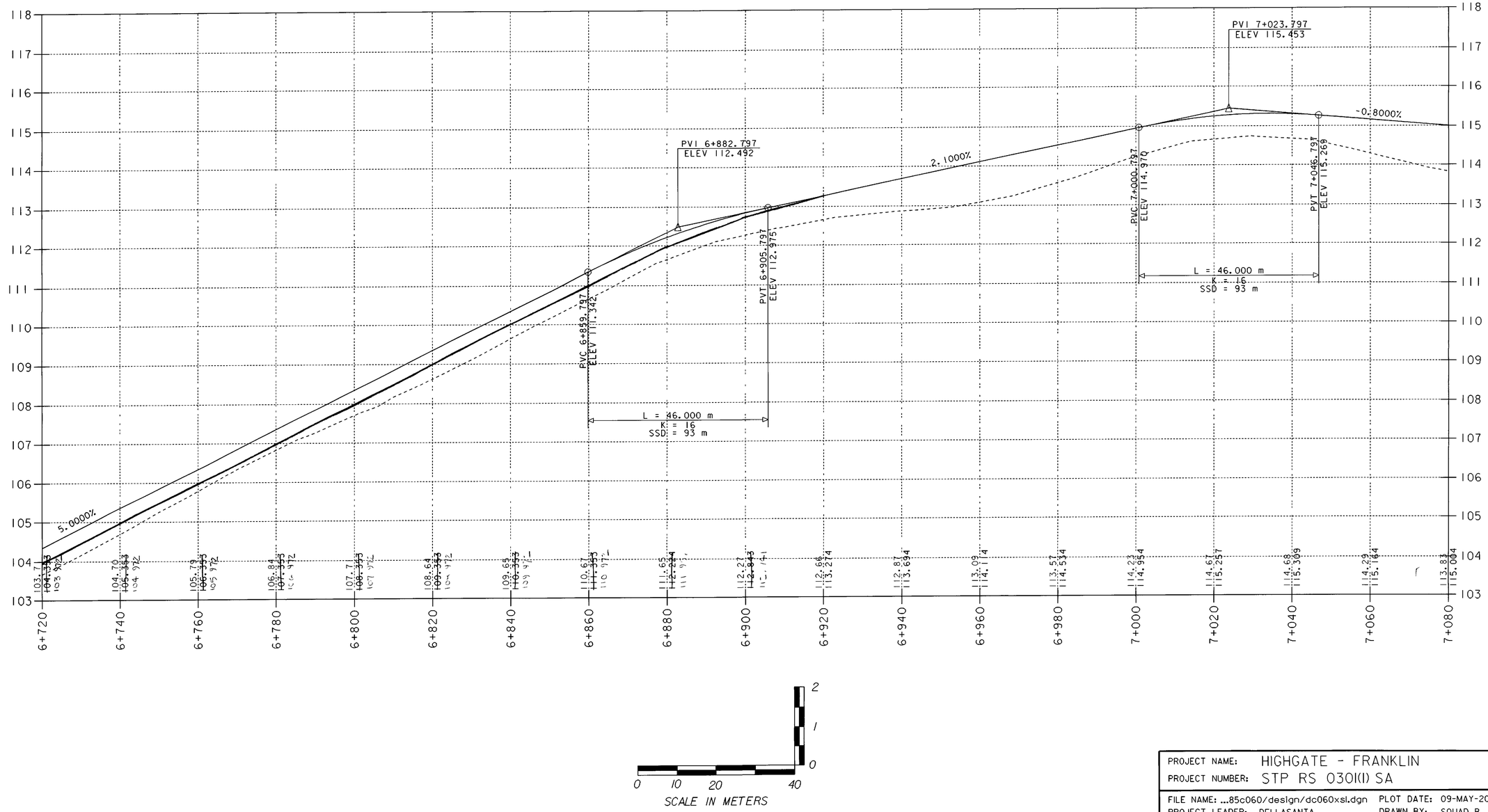

PROJECT NAME:	HIGHGATE - FRANKLIN
PROJECT NUMBER:	STP RS 0301(1) SA
FILE NAME: ...85c060/design/dc060xsl.dgn	PLOT DATE: 09-MAY-2005
PROJECT LEADER: DELLASANTA	DRAWN BY: SQUAD B
DESIGNED BY: SQUAD B	CHECKED BY: SQUAD B
IPARM FILE NAME: dc060pl8.i	SHEET 117 OF 450

STEEL BEAM GUARDRAIL
STA 7+080.000 TO STA 7+360.000 RT

MANUFACTURED TERMINAL SECTION (TANGENTIAL)
STA 7+360.000 TO STA 7+375.243 RT

STONE FILL TYPE II
STA 7+080.000 TO STA ~~7+375.243~~ 7+360.000 RT
STA 7+120.000 TO STA 7+223.000 LT

GRUBBING MATERIAL
STA 7+080.000 TO STA ~~7+375.243~~ 7+360.000 RT

EROSION MATTING (JUTE)
STA 7+080.000 TO STA ~~7+375.243~~ 7+360.000 RT

CONSTRUCT DRIVE
STA 7+405.000 LT PAVED

RELOCATE MAIL BOX, SINGLE SUPPORT
STA 7+411.500 RT TO STA 7+398.780 LT

~~REMOVING AND RESETTING FENCE~~
~~STA 7+341.210 RT - 4.9M BACK~~

~~STONE FILL TYPE I~~
~~STA 6+800.000 TO STA 6+850.000 LT~~

CONSTRUCT SPECIAL DITCH
STA 7+170.000 TO STA 7+230.000 LT
STA 7+270.000 TO STA 7+310.000 LT
STA 7+370.000 TO STA 7+400.000 LT
STA 7+410.000 TO STA 7+420.000 LT

VT MAGT Metric

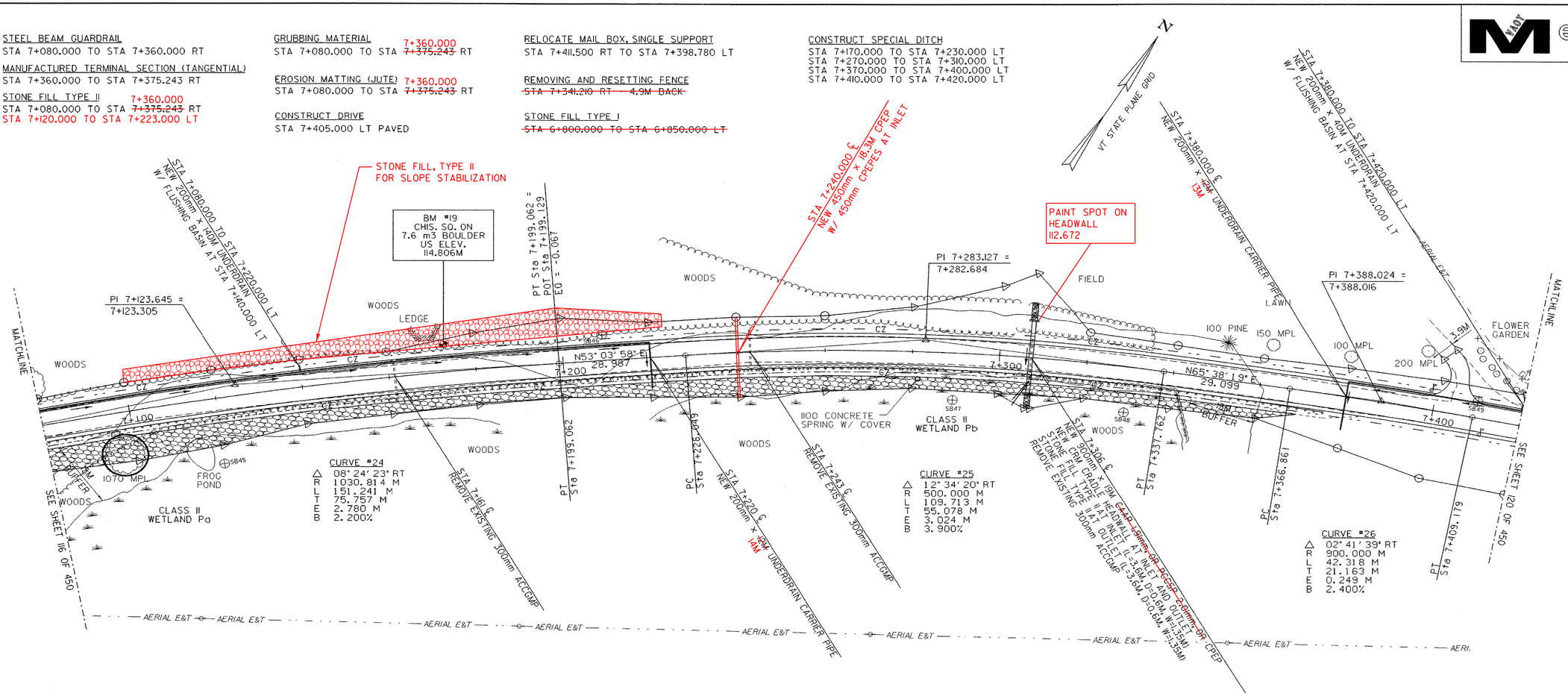

CURVE #24
△ 08° 24' 23" RT
R 1030.814 M
L 151.241 M
T 75.757 M
E 2.780 M
B 2.200%

CURVE #25
△ 12° 34' 20" RT
R 500.000 M
L 109.713 M
T 55.078 M
E 3.024 M
B 3.900%

CURVE #26
△ 02° 41' 39" RT
R 900.000 M
L 42.318 M
T 21.163 M
E 0.249 M
B 2.400%

0 10 20 30
SCALE IN METERS

○ DENOTES TREE OR STUMP REMOVAL

NOTES:
1. ALL SIDE ROAD RADII SHALL BE 11M UNLESS OTHERWISE NOTED. REFER TO STD B-12M
2. ALL DRIVE RADII SHALL BE 6M UNLESS OTHERWISE NOTED. REFER TO STD B-71M

PROJECT NAME: HIGHGATE - FRANKLIN
PROJECT NUMBER: STP RS 0301(1) SA

FILE NAME: ...85c060/design/dc060bdr.dgn PLOT DATE: 09-MAY-2005
PROJECT LEADER: DELLASANTA DRAWN BY: SQUAD B
DESIGNED BY: SQUAD B CHECKED BY: SQUAD B
IPARM FILE NAME: dc060119.i SHEET 118 OF 450

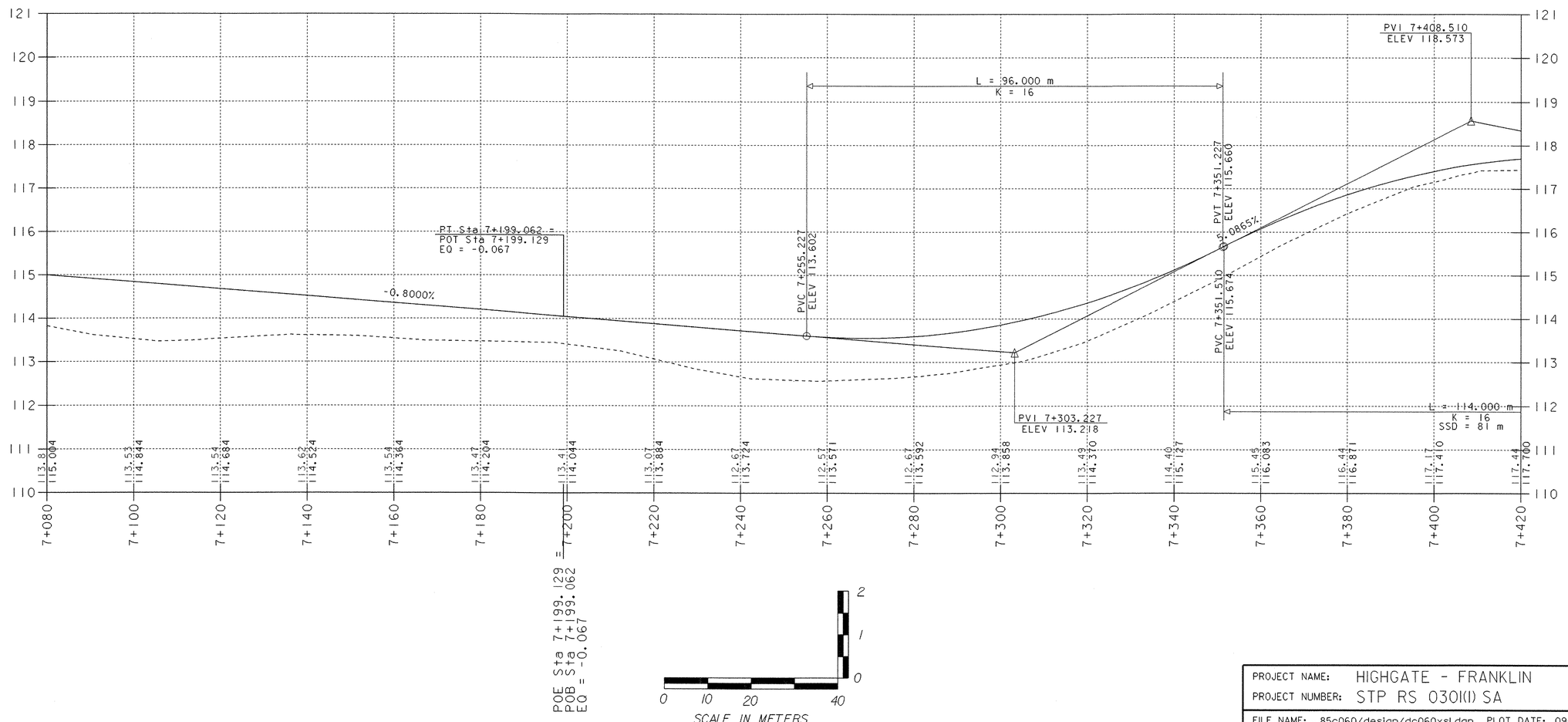

PROJECT NAME:	HIGHGATE - FRANKLIN
PROJECT NUMBER:	STP RS 0301(I) SA
FILE NAME: ...85c060/design/dc060xsl.dgn	PLOT DATE: 09-MAY-2005
PROJECT LEADER: DELLASANTA	DRAWN BY: SQUAD B
DESIGNED BY: SQUAD B	CHECKED BY: SQUAD B
IPARM FILE NAME: dc060pl9.I	SHEET 119 OF 450

CONSTRUCT DRIVE
STA 7+504.000 RT GRAVEL
STA 7+618.000 LT PAVED
STA 7+653.000 LT PAVED

ANCHOR FOR STEEL BEAM RAIL
~~STA 7+508.500 RT~~
~~STA 7+564.670 RT~~
STA 7+514.300 RT
STA 7+568.100 RT

~~STONE FILL, TYPE II~~ SEE BELOW
~~STA 7+508.500 TO STA 7+564.670 RT~~

GRUBBING MATERIAL
~~STA 7+508.500 TO STA 7+564.670 RT~~
STA 7+530.000 TO STA 7+560.000 RT

~~EROSION MATTING (JUTE)~~ SEE BELOW
~~STA 7+508.500 TO STA 7+564.670 RT~~

STEEL BEAM GUARDRAIL
~~STA 7+508.500 TO STA 7+564.670 RT~~
STA 7+514.300 TO STA 7+570.300 RT

RELOCATE MAIL BOX, SINGLE SUPPORT
STA 7+508.211 RT
STA 7+661.000 RT TO STA 7+644.030 LT

CONSTRUCT SPECIAL DITCH
STA 7+420.000 TO STA 7+496.500 LT
STA 7+503.500 TO STA 7+615.250 LT
STA 7+620.750 TO STA 7+648.250 LT
STA 7+675.750 TO STA 7+720.000 LT

REMOVING AND RESETTING FENCE
~~STA 7+506.250 TO STA 7+639.500 RT~~
~~STA 7+506.250 RT - 9M BACK~~
~~STA 7+639.500 RT - 3M BACK~~

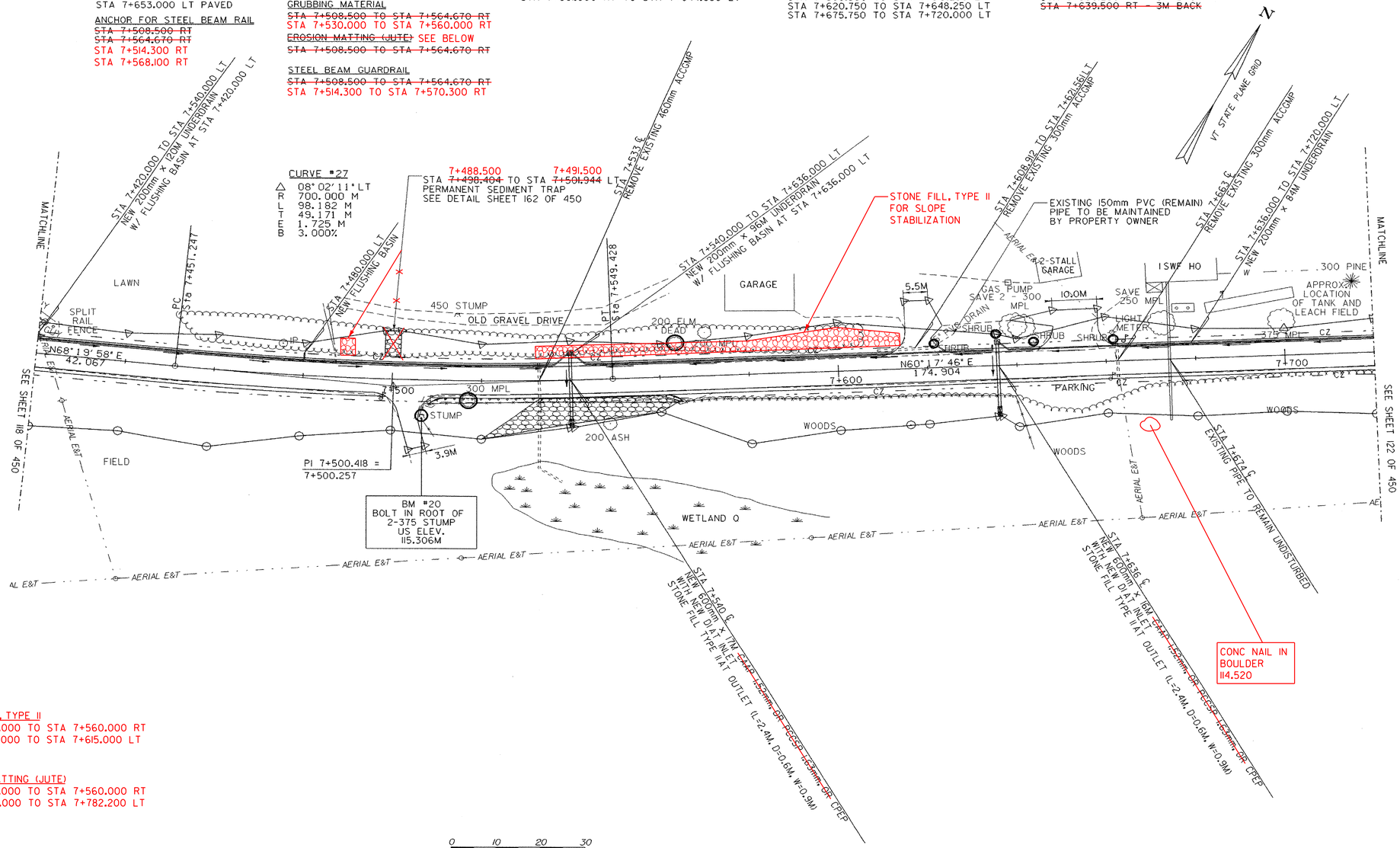

STONE FILL, TYPE II
STA 7+530.000 TO STA 7+560.000 RT
STA 7+532.000 TO STA 7+615.000 LT

EROSION MATTING (JUTE)
STA 7+530.000 TO STA 7+560.000 RT
STA 7+660.000 TO STA 7+782.200 LT

○ DENOTES TREE OR STUMP REMOVAL

NOTES:
1. ALL SIDE ROAD RADII SHALL BE 11M UNLESS OTHERWISE NOTED. REFER TO STD B-12M
2. ALL DRIVE RADII SHALL BE 6M UNLESS OTHERWISE NOTED. REFER TO STD B-71M

PROJECT NAME:	HIGHGATE - FRANKLIN
PROJECT NUMBER:	STP RS 0301(1) SA
FILE NAME: ...85c060/design/dc060bdr.dgn	PLOT DATE: 09-MAY-2005
PROJECT LEADER: DELLASANTA	DRAWN BY: SQUAD B
DESIGNED BY: SQUAD B	CHECKED BY: SQUAD B
IPARM FILE NAME: dc060120.i	SHEET 120 OF 450

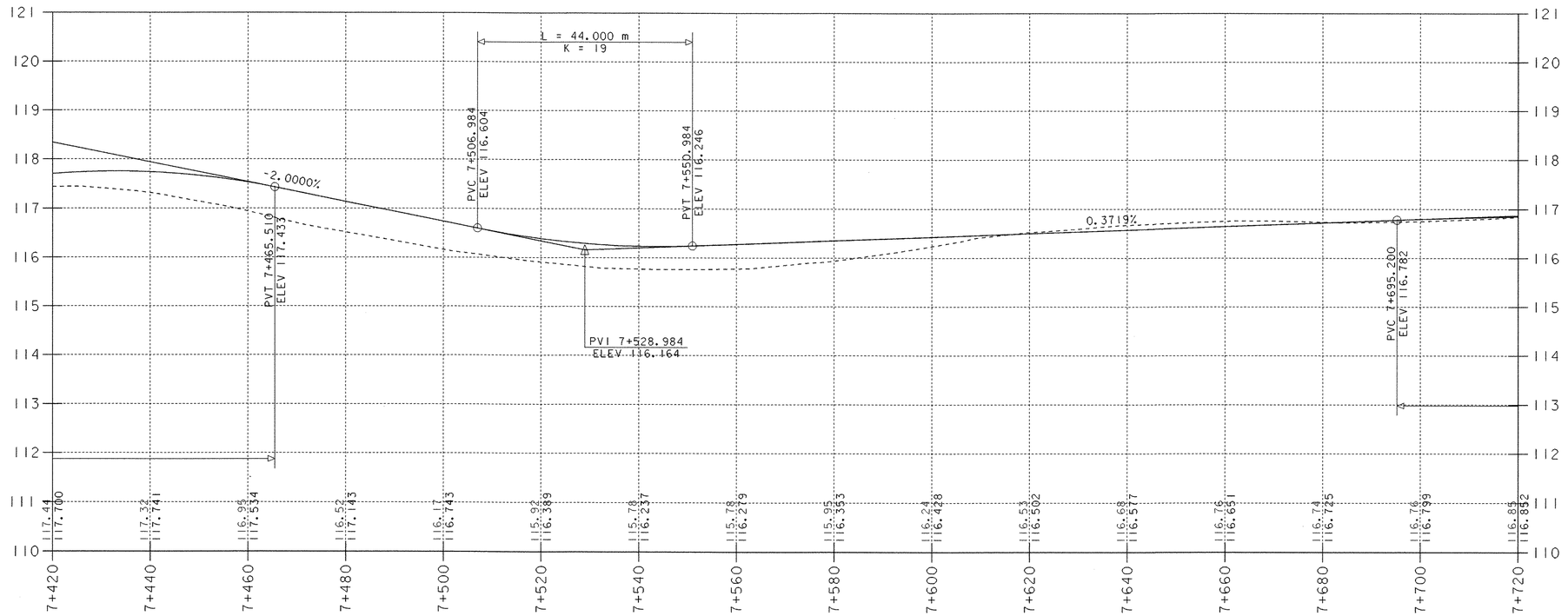

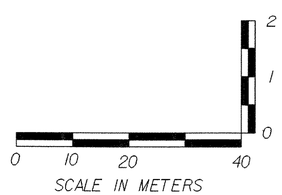

PROJECT NAME: HIGHGATE - FRANKLIN	
PROJECT NUMBER: STP RS 0301(1) SA	
FILE NAME: ...85c060/design/dc060xsl.dgn	PLOT DATE: 09-MAY-2005
PROJECT LEADER: DELLASANTA	DRAWN BY: SQUAD B
DESIGNED BY: SQUAD B	CHECKED BY: SQUAD B
IPARM FILE NAME: dc060p20.i	SHEET 121 OF 450

CONSTRUCT DRIVE
STA 7+749.000 RT GRAVEL
STA 7+827.000 LT GRAVEL

MANUFACTURED TERMINAL SECTION (TANGENTIAL)
~~STA 7+763.682 TO STA 7+778.896 RT~~
STA 7+760.000 TO STA 7+775.200 RT
STEEL BEAM GUARDRAIL
~~STA 7+778.896 TO STA 8+040.000 RT~~
STA 7+775.200 TO STA 7+839.000 RT
STA 7+891.300 TO STA 8+040.000 RT

ANCHOR FOR STEEL BEAM GUARDRAIL
STA 7+835.200 RT
STA 7+895.100 RT

CONSTRUCT SPECIAL DITCH
STA 7+720.000 TO STA 7+747.000 LT
STA 7+751.000 TO STA 7+910.000 LT
STA 7+950.000 TO STA 8+030.000 LT
STA 7+950.000 TO STA 7+810.020 RT

~~GRUBBING MATERIAL~~ SEE BELOW
~~STA 7+720.000 TO STA 7+732.786 RT~~
~~STA 8+810.020 TO STA 8+040.000 RT~~

~~REMOVING AND RESETTING FENCE~~
~~STA 7+815.817 RT 6M BACK~~

RELOCATE MAIL BOX, SINGLE SUPPORT
STA 7+830.370 RT TO STA 7+832.088 LT

~~REMOVAL OF EXISTING FENCE~~
~~STA 8+013.200 TO STA 8+033.200 LT~~

GRUBBING MATERIAL
STA 7+780.000 TO STA 7+827.000 RT
STA 8+810.000 TO STA 8+040.000 RT
STA 7+900.000 TO STA 7+950.000 RT

~~EROSION MATTING (JUTE)~~ SEE BELOW
~~STA 7+720.000 TO STA 7+732.786 RT~~
~~STA 8+810.020 TO STA 8+040.000 RT~~

STONE FILL, TYPE II
~~STA 7+720.000 TO STA 7+732.786 RT~~
~~STA 8+810.020 TO STA 8+040.000 RT~~
STA 7+780.000 TO STA 7+827.000 RT
STA 7+900.000 TO STA 7+950.000 RT
STA 7+945.000 TO STA 8+017.000 LT
STA 8+810.000 TO STA 8+040.000 RT

EROSION MATTING (JUTE)
STA 7+780.000 TO STA 7+827.000 RT
STA 8+810.000 TO STA 8+040.000 RT
STA 7+900.000 TO STA 7+950.000 RT

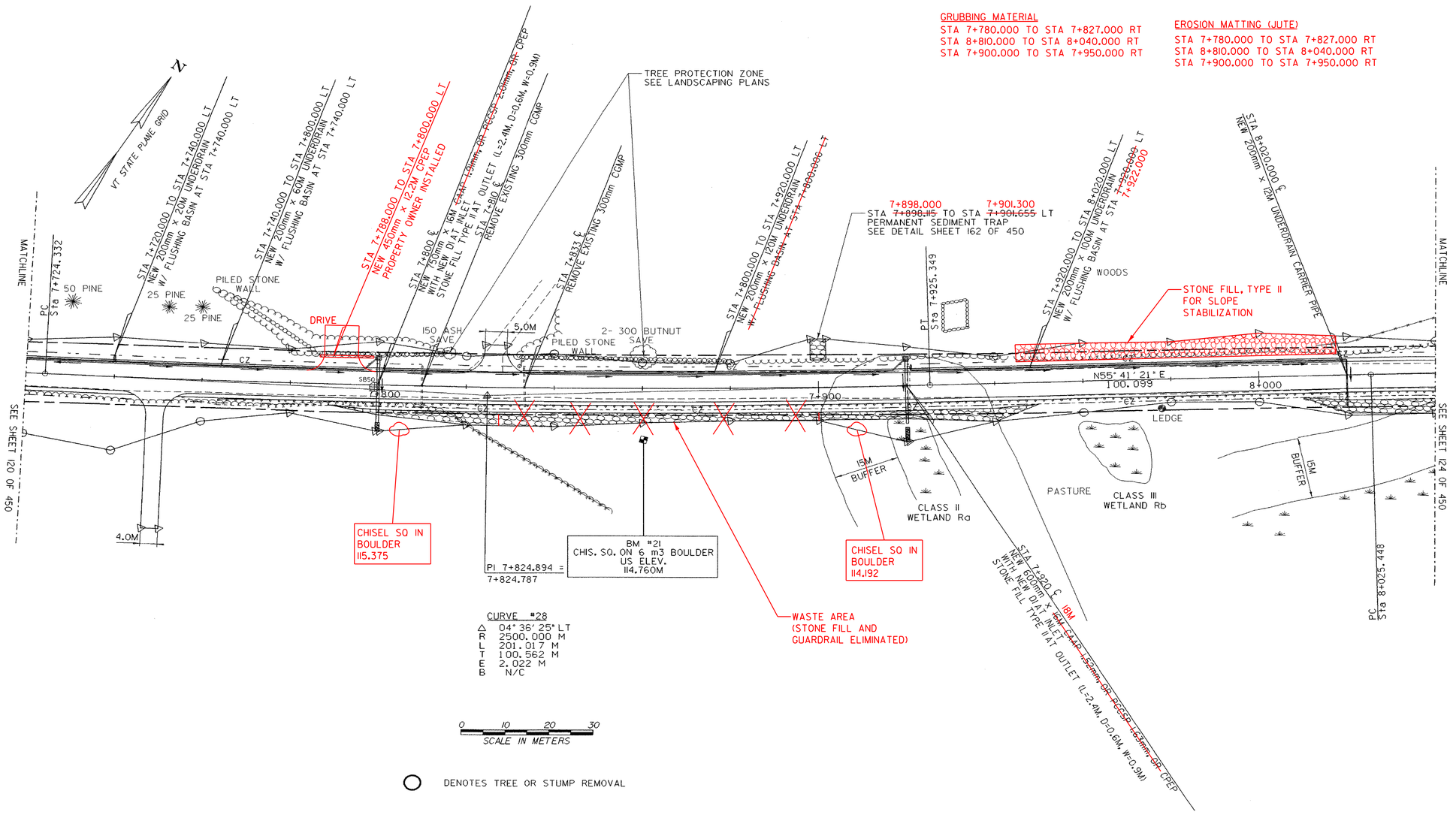

CURVE #28
Δ 04° 36' 25" LT
R 2500.000 M
L 201.017 M
T 100.562 M
E 2.022 M
B N/C

0 10 20 30
SCALE IN METERS

○ DENOTES TREE OR STUMP REMOVAL

NOTES:
1. ALL SIDE ROAD RADII SHALL BE 11M UNLESS OTHERWISE NOTED. REFER TO STD B-12M
2. ALL DRIVE RADII SHALL BE 6M UNLESS OTHERWISE NOTED. REFER TO STD B-71M

PROJECT NAME:	HIGHGATE - FRANKLIN
PROJECT NUMBER:	STP RS 0301(1) SA
FILE NAME: ...85c060/design/dc060bdr.dgn	PLOT DATE: 09-MAY-2005
PROJECT LEADER: DELLASANTA	DRAWN BY: SQUAD B
DESIGNED BY: SQUAD B	CHECKED BY: SQUAD B
IPARM FILE NAME: dc060121.I	SHEET 122 OF 450

Metric

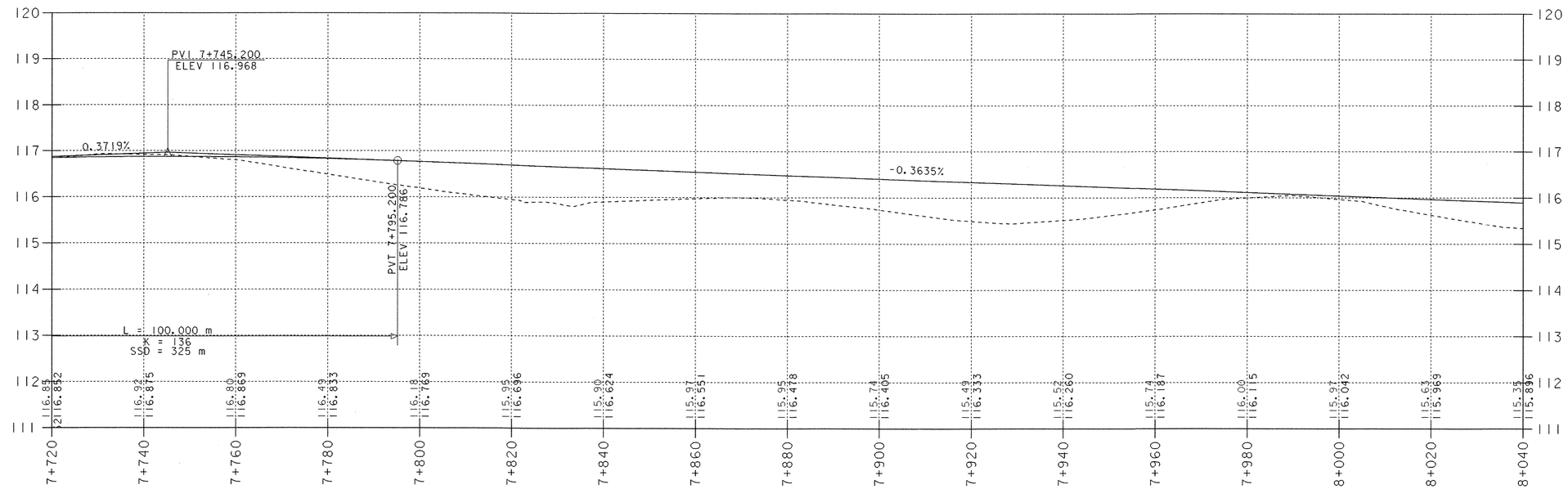

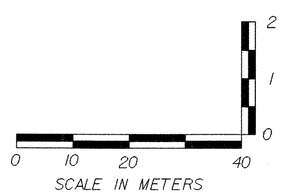

PROJECT NAME:	HIGHGATE - FRANKLIN
PROJECT NUMBER:	STP RS 0301(1) SA
FILE NAME: ...85c060/design/dc060xsl.dgn	PLOT DATE: 09-MAY-2005
PROJECT LEADER: DELLASANTA	DRAWN BY: SQUAD B
DESIGNED BY: SQUAD B	CHECKED BY: SQUAD B
IPARM FILE NAME: dc060p2l.i	SHEET 123 OF 450

CONSTRUCT DRIVE
STA 8+060.000 LT GRAVEL
STA 8+118.000 LT GRAVEL
REV 8+309.000 LT GRAVEL

STONE FILL, TYPE II
STA 8+040.000 TO REV STA ~~8+339.720~~ 8+330.000 RT

CONSTRUCT SPECIAL DITCH
STA 8+065.000 TO STA 8+080.000 LT
STA 8+180.000 TO STA 8+220.000 LT
REV STA 8+316.000 TO REV STA 8+357.000 LT

GRUBBING MATERIAL
STA 8+040.000 TO REV STA ~~8+339.720~~ 8+330.000 RT

EROSION MATTING (JUTE)
STA 8+040.000 TO REV STA ~~8+339.720~~ 8+330.000 RT

STEEL BEAM GUARDRAIL
STA 8+040.000 TO REV STA 8+339.720 RT

RELOCATE MAIL BOX, SINGLE SUPPORT
STA 8+118.000 RT TO 8+121.4282 LT
REV STA 8+309.890 RT TO REV STA 8+318.910 LT

N
VT STATE PLANE GRID

MAINE Metric

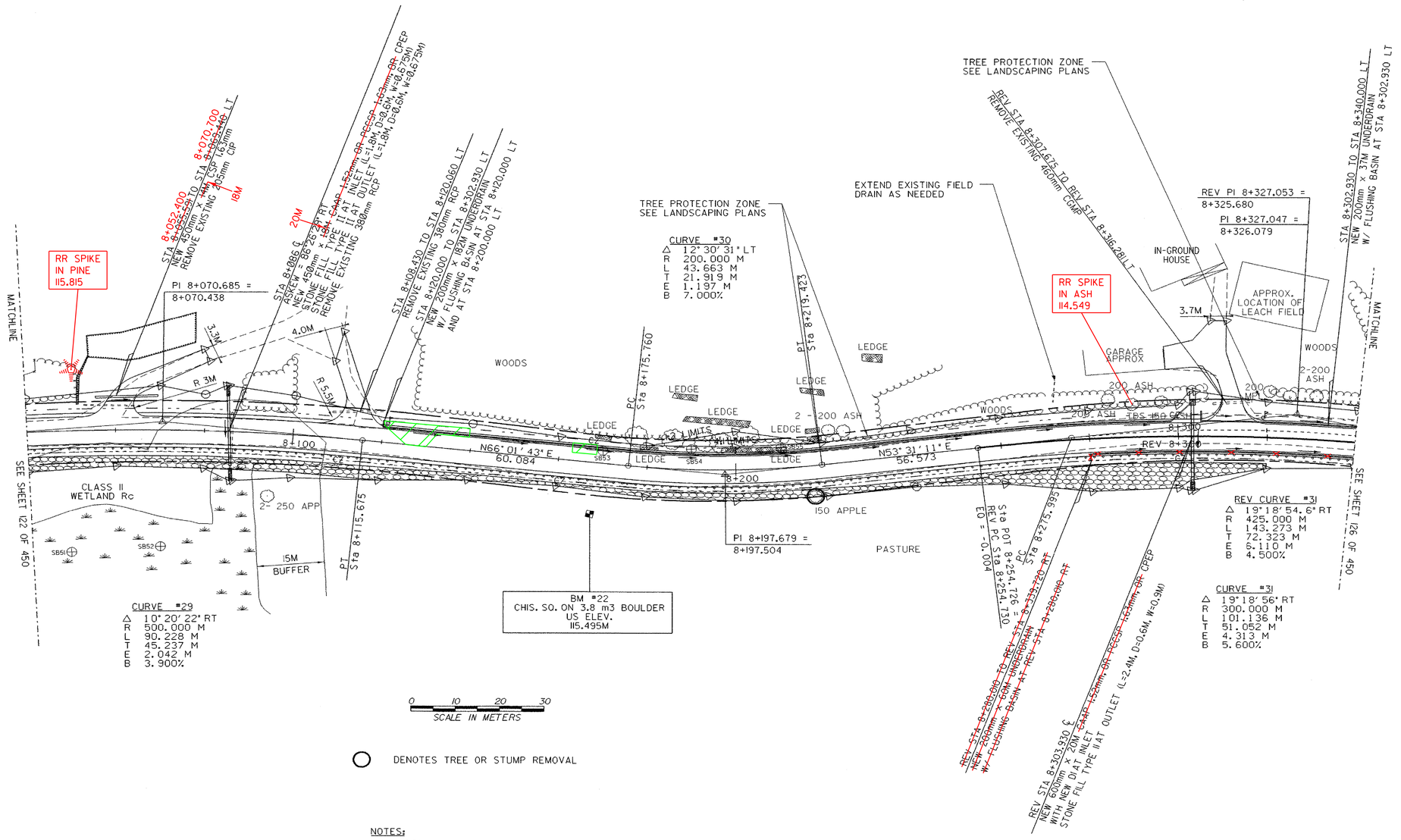

NOTES:
1. ALL SIDE ROAD RADII SHALL BE 11M UNLESS OTHERWISE NOTED. REFER TO STD B-12M
2. ALL DRIVE RADII SHALL BE 6M UNLESS OTHERWISE NOTED. REFER TO STD B-71M

PROJECT NAME: HIGHGATE - FRANKLIN
PROJECT NUMBER: STP RS 0301(1) SA

FILE NAME: ...85c060/design/dc060bdr.dgn PLOT DATE: 09-MAY-2005
PROJECT LEADER: DELLASANTA DRAWN BY: SQUAD B
DESIGNED BY: SQUAD B CHECKED BY: SQUAD B
IPARM FILE NAME: dc060122.1 SHEET 124 OF 450

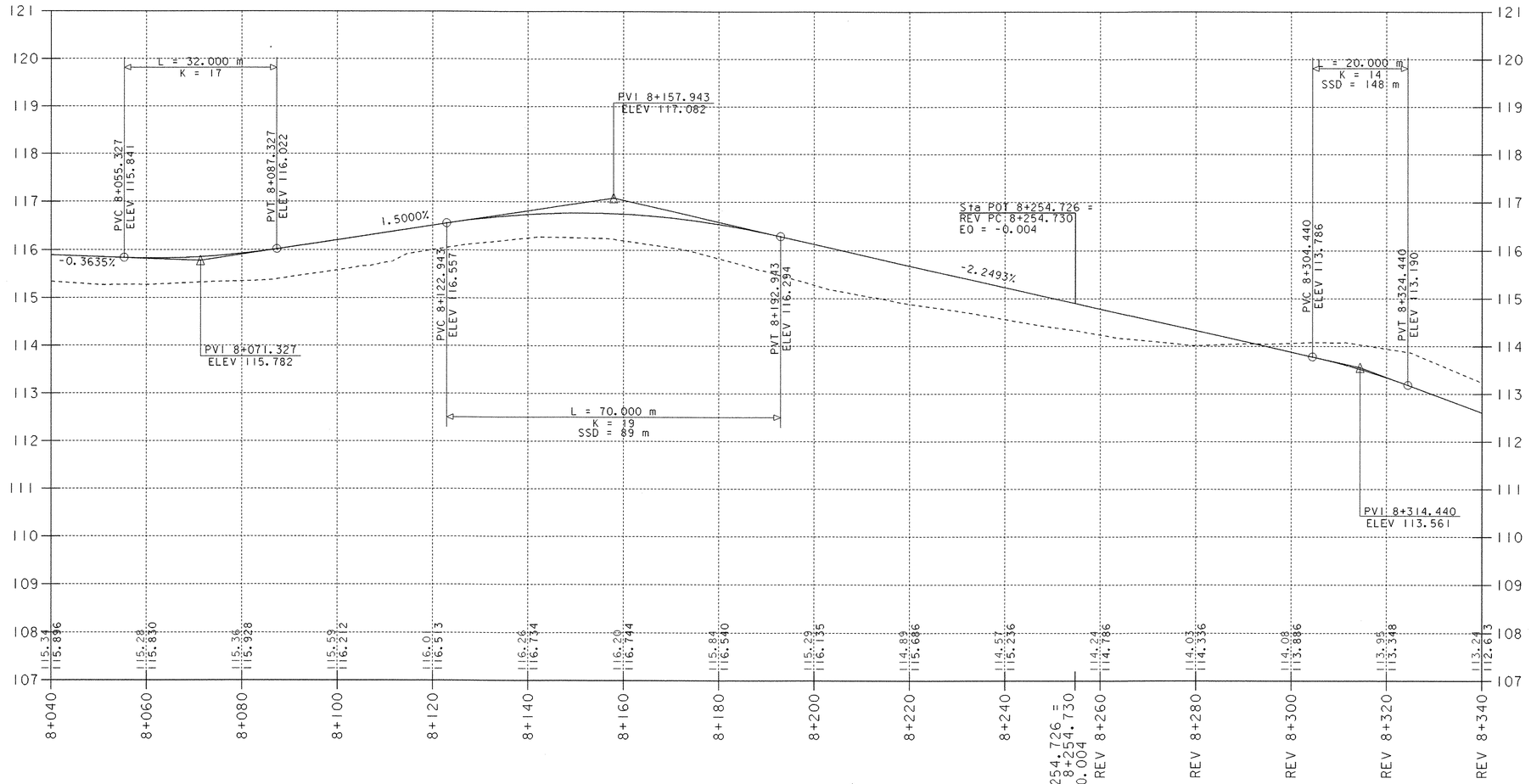

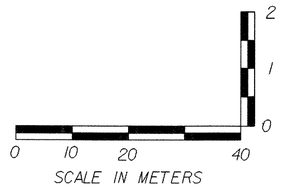

PROJECT NAME:	HIGHGATE - FRANKLIN
PROJECT NUMBER:	STP RS 0301(I) SA
FILE NAME: ...85c060/design/dc060xsl.dgn	PLOT DATE: 09-MAY-2005
PROJECT LEADER: DELLASANTA	DRAWN BY: SQUAD B
DESIGNED BY: SQUAD B	CHECKED BY: SQUAD B
IPARM FILE NAME: dc060p22.i	SHEET 125 OF 450

CONSTRUCT DRIVE
REV STA 8+352.570 LT GRAVEL
STA 8+412.000 LT GRAVEL
STA 8+585.000 RT GRAVEL
STA 8+587.000 LT GRAVEL
STA 8+626.000 RT GRAVEL

STEEL BEAM GUARDRAIL
REV STA 8+339.720 RT TO STA ~~8+460.696~~ 8+460.000 RT

RELOCATE MAIL BOX, SINGLE SUPPORT
REV STA 8+346.340 RT TO REV STA 8+359.630 LT
STA 8+589.827 RT
STA 8+591.922 RT

MANUFACTURED TERMINAL SECTION (TANGENTIAL)
STA ~~8+460.696~~ 8+460.000 TO STA ~~8+475.936~~ 8+475.200 RT

~~REMOVING AND RESETTING FENCE~~
~~STA 8+479.000 LT - 2.5M BACK~~
~~STA 8+479.000 TO STA 8+578.640 LT~~
~~STA 8+578.640 LT - 1M BACK~~

STONE FILL, TYPE II
REV STA ~~8+360.000~~ 8+349.000 TO STA 8+470.000 RT
GRUBBING MATERIAL
REV STA ~~8+360.000~~ 8+349.000 TO STA 8+470.000 RT
EROSION MATTING (JUTE)
REV STA ~~8+360.000~~ 8+349.000 TO STA 8+470.000 RT

CONSTRUCT SPECIAL DITCH
REV STA 8+340.000 TO REVSTA 8+357.000 LT
REV STA 8+375.000 TO REV STA 8+408.000 LT
STA 8+510.000 TO STA 8+584.250 LT
STA 8+510.000 TO STA 8+582.500 RT

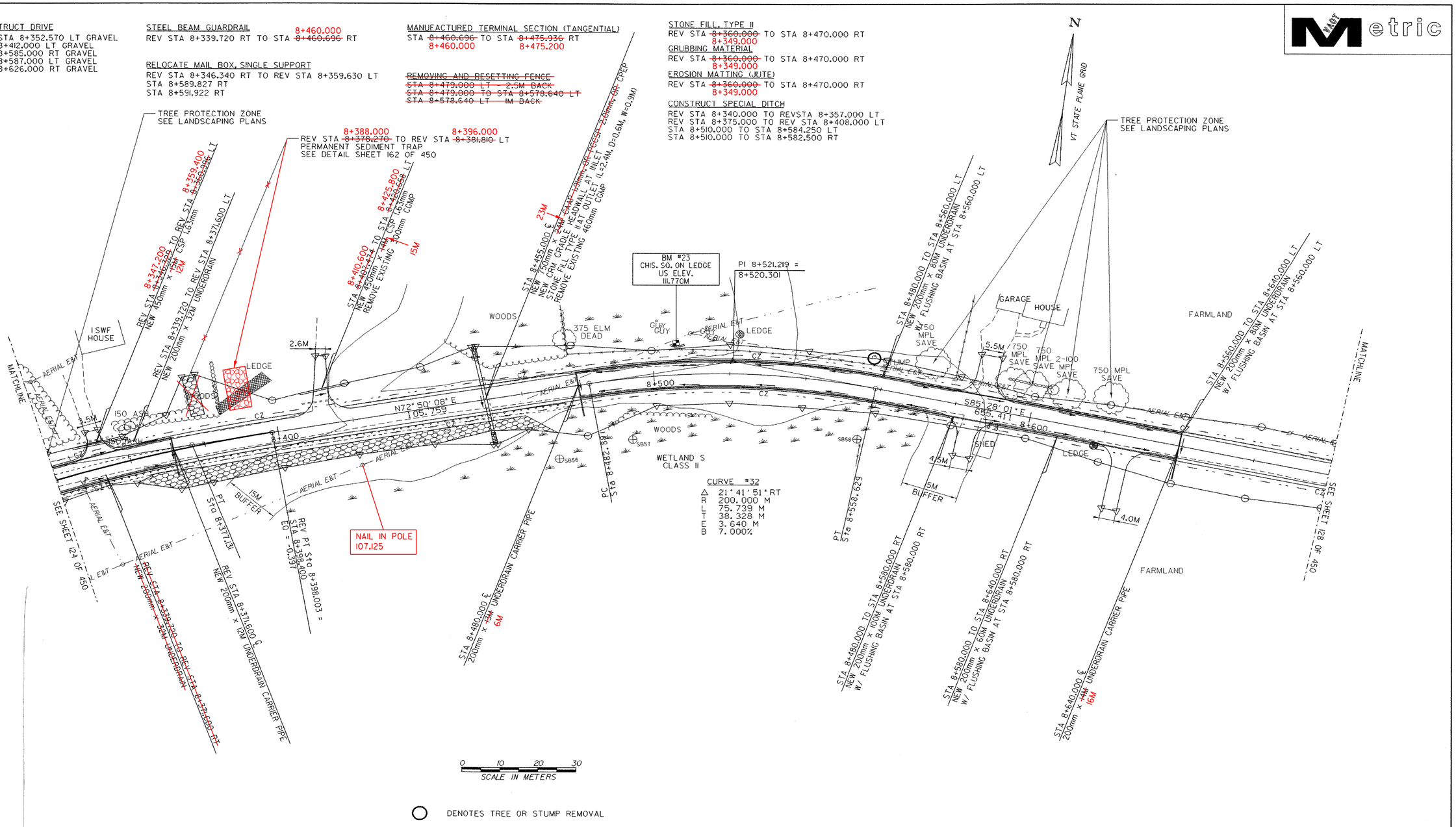

○ DENOTES TREE OR STUMP REMOVAL

NOTES:
1. ALL SIDE ROAD RADII SHALL BE 11M UNLESS OTHERWISE NOTED. REFER TO STD B-12M
2. ALL DRIVE RADII SHALL BE 6M UNLESS OTHERWISE NOTED. REFER TO STD B-71M

PROJECT NAME: HIGHGATE - FRANKLIN	
PROJECT NUMBER: STP RS 0301(1) SA	
FILE NAME: ...85c060/design/dc060bdr.dgn	PLOT DATE: 09-MAY-2005
PROJECT LEADER: DELLASANTA	DRAWN BY: SQUAD B
DESIGNED BY: SQUAD B	CHECKED BY: SQUAD B
IPARM FILE NAME: dc060123.i	SHEET 126 OF 450

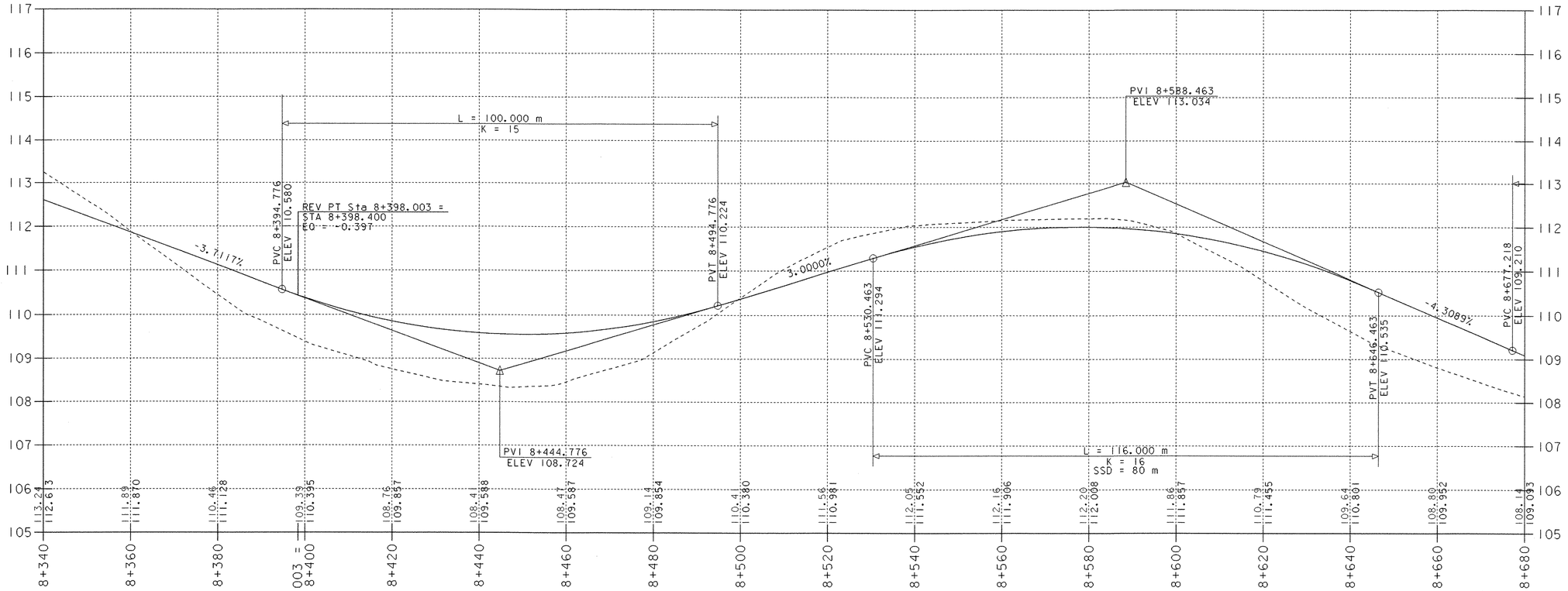

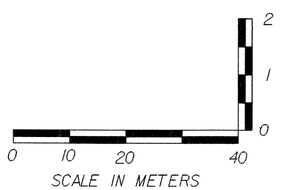

PROJECT NAME:	HIGHGATE - FRANKLIN
PROJECT NUMBER:	STP RS 0301(I) SA
FILE NAME: ...85c060/design/dc060xsl.dgn	PLOT DATE: 09-MAY-2005
PROJECT LEADER: DELLASANTA	DRAWN BY: SQUAD B
DESIGNED BY: SQUAD B	CHECKED BY: SQUAD B
IPARM FILE NAME: dc060p23.i	SHEET 127 OF 450

CONSTRUCT DRIVE
STA 8+764.000 RT GRAVEL
STA 8+860.000 LT GRAVEL
STA 8+814.000 RT GRAVEL

STONE FILL, TYPE II
8+760.000 STA ~~8+885.143~~ TO STA 9+020.000 LT
STA ~~8+885.559~~ TO STA 9+020.000 RT
8+900.000

EROSION MATTING (JUTE)
~~STA 8+885.143 TO STA 9+020.000 LT~~
~~STA 8+885.559 TO STA 9+020.000 RT~~

GEOTEXTILE UNDER STONE FILL
STA ~~8+865.862~~ TO STA 9+020.000 LT
8+760.000

STEEL BEAM GUARDRAIL SEE BELOW
~~STA 8+688.330 TO STA 8+761.548 RT~~
~~STA 8+706.935 TO STA 8+790.420 LT~~
~~STA 8+903.848 TO STA 9+020.000 RT~~
~~STA 8+900.047 TO STA 9+020.000 LT~~

GRUBBING MATERIAL
8+760.000 STA ~~8+885.143~~ TO STA 9+020.000 LT
STA ~~8+885.559~~ TO STA 9+020.000 RT
8+900.000

~~REMOVING AND RESETTING FENCE~~
~~STA 9+018.810 LT 3M BACK~~
~~STA 9+018.810 TO STA 9+020.000 LT~~

MANUFACTURED TERMINAL SECTION (TANGENTIAL) SEE BELOW
~~STA 8+884.807 TO STA 8+900.047 LT~~
~~STA 8+888.607 TO STA 8+903.848 RT~~

ANCHOR FOR STEEL BEAM RAIL
~~STA 8+688.330 RT~~ STA 8+691.800 RT
~~STA 8+706.935 LT~~ STA 8+708.800 LT
~~STA 8+761.548 RT~~ STA 8+753.200 RT
~~STA 8+790.420 LT~~ STA 8+786.200 LT

CONSTRUCT SPECIAL DITCH
STA 8+690.000 TO STA 8+750.000 RT
STA 8+710.000 TO STA 8+764.000 LT
STA 8+767.000 TO STA 8+790.000 RT

N
VT STATE PLANE GRID

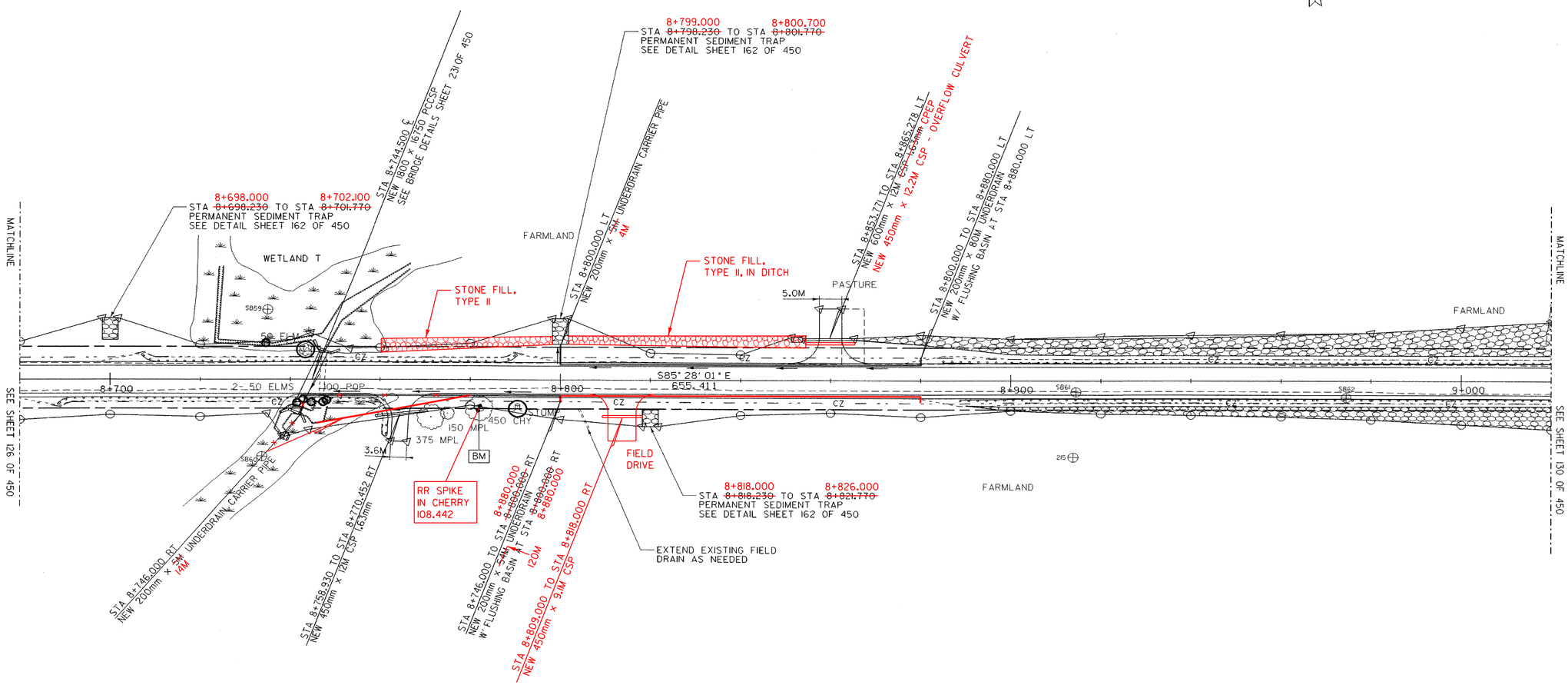

MANUFACTURED TERMINAL SECTION (TANGENTIAL)
STA 8+884.800 TO STA 8+900.000 LT
STA 8+887.800 TO STA 8+903.000 RT

STEEL BEAM GUARDRAIL
STA 8+688.000 TO STA 8+757.000 RT
STA 8+705.000 TO STA 8+790.420 LT
STA 8+900.000 TO STA 9+020.000 RT
STA 8+903.000 TO STA 9+020.000 LT

0 10 20 30
SCALE IN METERS

○ DENOTES TREE OR STUMP REMOVAL

NOTES:
1. ALL SIDE ROAD RADII SHALL BE 11M UNLESS OTHERWISE NOTED. REFER TO STD B-12M
2. ALL DRIVE RADII SHALL BE 6M UNLESS OTHERWISE NOTED. REFER TO STD B-7IM

PROJECT NAME:	HIGHGATE - FRANKLIN
PROJECT NUMBER:	STP RS 0301(1) SA
FILE NAME: ...85c060/design/dc060bdr.dgn	PLOT DATE: 09-MAY-2005
PROJECT LEADER: DELLASANTA	DRAWN BY: SQUAD B
DESIGNED BY: SQUAD B	CHECKED BY: SQUAD B
IPARM FILE NAME: dc060124.i	SHEET 128 OF 450

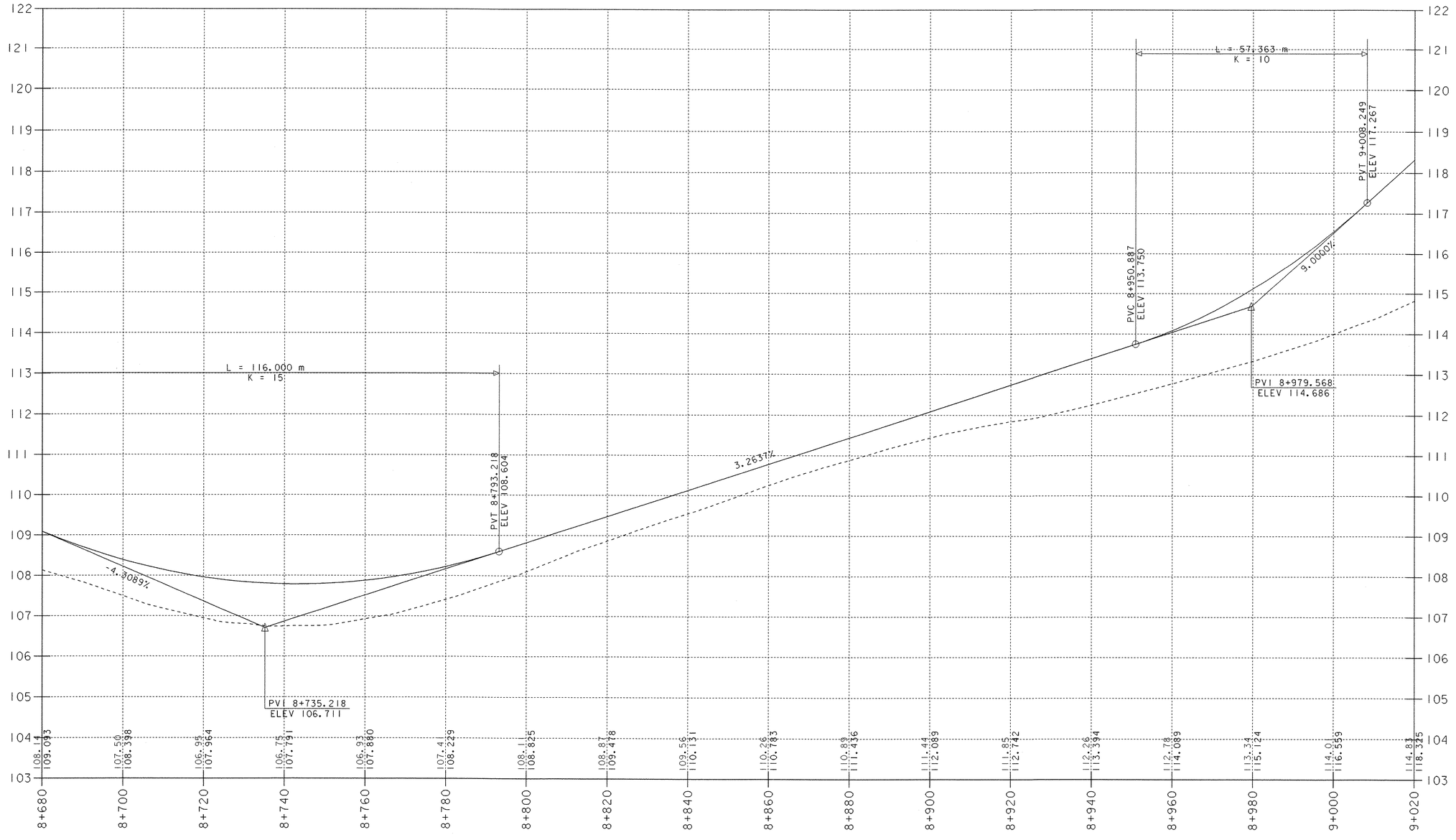

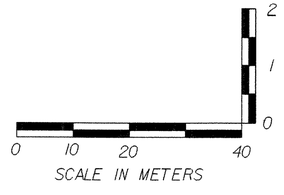

PROJECT NAME:	HIGHGATE - FRANKLIN
PROJECT NUMBER:	STP RS 0301(I) SA
FILE NAME: ...85c060/design/dc060xsi.dgn	PLOT DATE: 09-MAY-2005
PROJECT LEADER: DELLASANTA	DRAWN BY: SQUAD B
DESIGNED BY: SQUAD B	CHECKED BY: SQUAD B
IPARM FILE NAME: dc060p24.i	SHEET 129 OF 450

STEEL BEAM GUARDRAIL 9+120.000
STA 9+020.000 TO STA 9+120.~~048~~ RT
STA 9+020.000 TO STA 9+17~~6.885~~ LT
9+177.000

GRUBBING MATERIAL 9+220.000
STA 9+020.000 TO STA 9+~~192.062~~ LT
STA 9+020.000 TO STA 9+~~135.285~~ RT
9+120.000

EROSION MATTING (JUTE)
~~STA 9+020.000 TO STA 9+192.062 LT~~
~~STA 9+020.000 TO STA 9+135.285 RT~~

GEOTEXTILE UNDER STONE FILL
STA 9+020.000 TO STA 9+220.000 LT

MANUFACTURED TERMINAL SECTION (TANGENTIAL)
STA 9+120.048 TO STA 9+135.285 RT
STA 9+17~~6.885~~ TO STA 9+192.~~062~~ LT
9+177.000 9+192.200

STONE FILL, TYPE II 9+220.000
STA 9+020.000 TO STA 9+~~192.062~~ LT
STA 9+020.000 TO STA 9+~~135.285~~ RT
9+120.000

CONSTRUCT SPECIAL DITCH
STA 24+005.000 TO STA 24+043.000 RT
STA 9+215.000 TO STA 9+246.000 RT
STA 25+005.000 TO STA 25+034.500 LT
STA 25+005.000 TO STA 25+025.000 RT
STA 9+256.000 TO STA 14+680.000 RT

VERTICAL GRANITE CURB
STA 9+2~~68.614~~ TO ah STA 14+66~~5.216~~ LT
9+271.000 14+664.000

~~REMOVING AND RESETTING FENCE~~
~~STA 9+020.000 TO STA 9+248.540 LT~~
~~STA 9+248.540 LT - 4.6M BACK~~
~~STA 9+263.493 TO STA ah 14+680.000 RT~~
~~STA ah 14+663.080 LT - 4M BACK~~
~~STA ah 14+676.230 LT - 3.6M BACK~~
~~STA ah 14+663.080 TO STA ah 14+680.000 LT~~

PORTLAND CEMENT CONCRETE SIDEWALK, 125MM
STA 9+295.598 LT (8M BACK)

CONSTRUCT DRIVE
STA 9+263.000 LT GRAVEL
STA ah 14+670.000 LT GRAVEL

STONE FILL, TYPE II
HANNA RD STA 24+063.000 TO STA 9+230.000 RT
WEBSTER RD STA 25+010.000 TO STA 25+058.000 LT
WEBSTER RD STA 25+010.000 TO STA 25+039.000 RT
STA 9+270.000 TO STA 14+680.000 RT

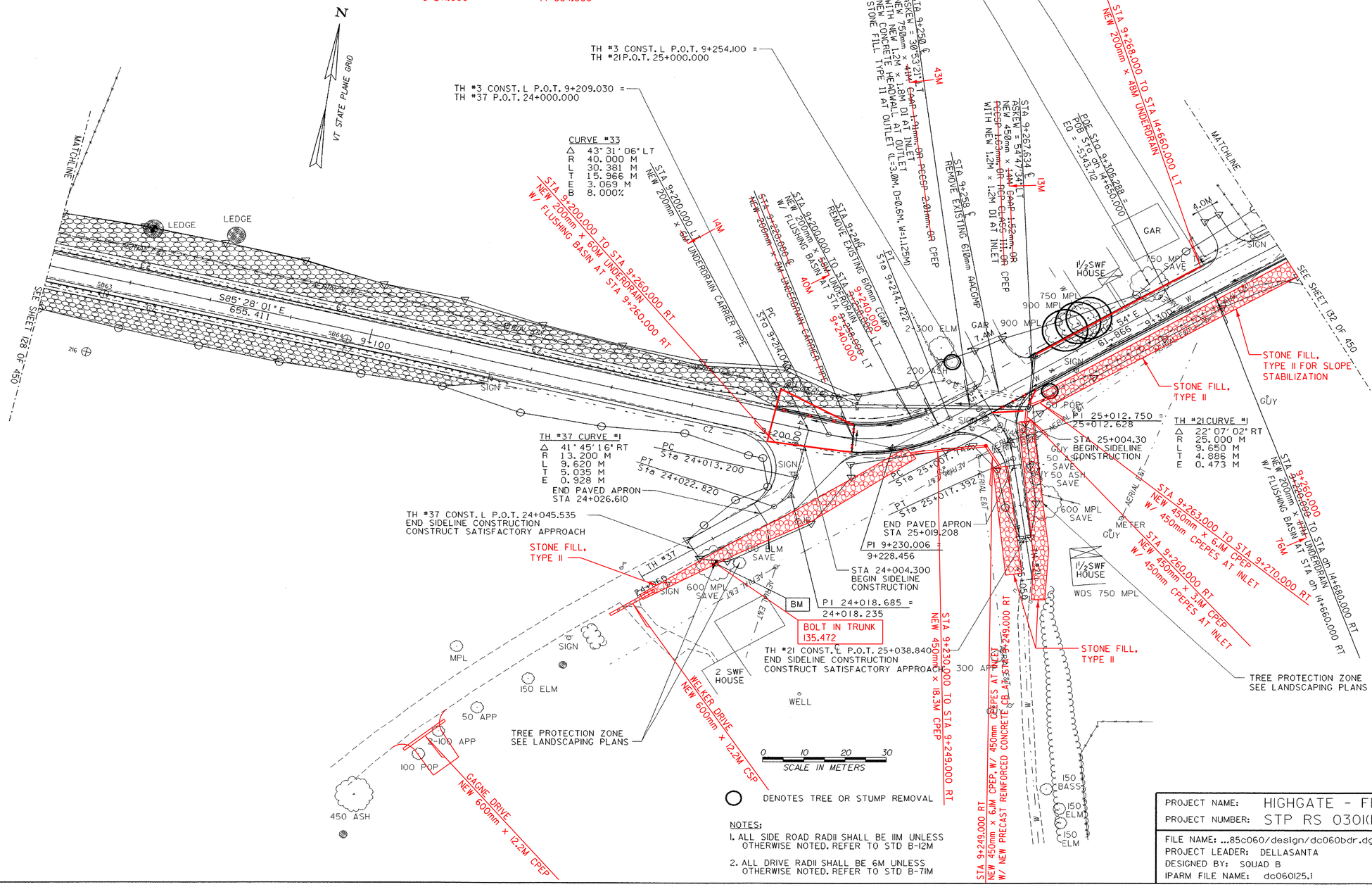

○ DENOTES TREE OR STUMP REMOVAL

NOTES:
1. ALL SIDE ROAD RADII SHALL BE 11M UNLESS OTHERWISE NOTED. REFER TO STD B-12M
2. ALL DRIVE RADII SHALL BE 6M UNLESS OTHERWISE NOTED. REFER TO STD B-7.1M

PROJECT NAME:	HIGHGATE - FRANKLIN
PROJECT NUMBER:	STP RS 0301(I) SA
FILE NAME: ...85c060/design/dc060bdr.dgn	PLOT DATE: 09-MAY-2005
PROJECT LEADER: DELLASANTA	DRAWN BY: SQUAD B
DESIGNED BY: SQUAD B	CHECKED BY: SQUAD B
IPARM FILE NAME: dc0601125.i	SHEET 130 OF 450

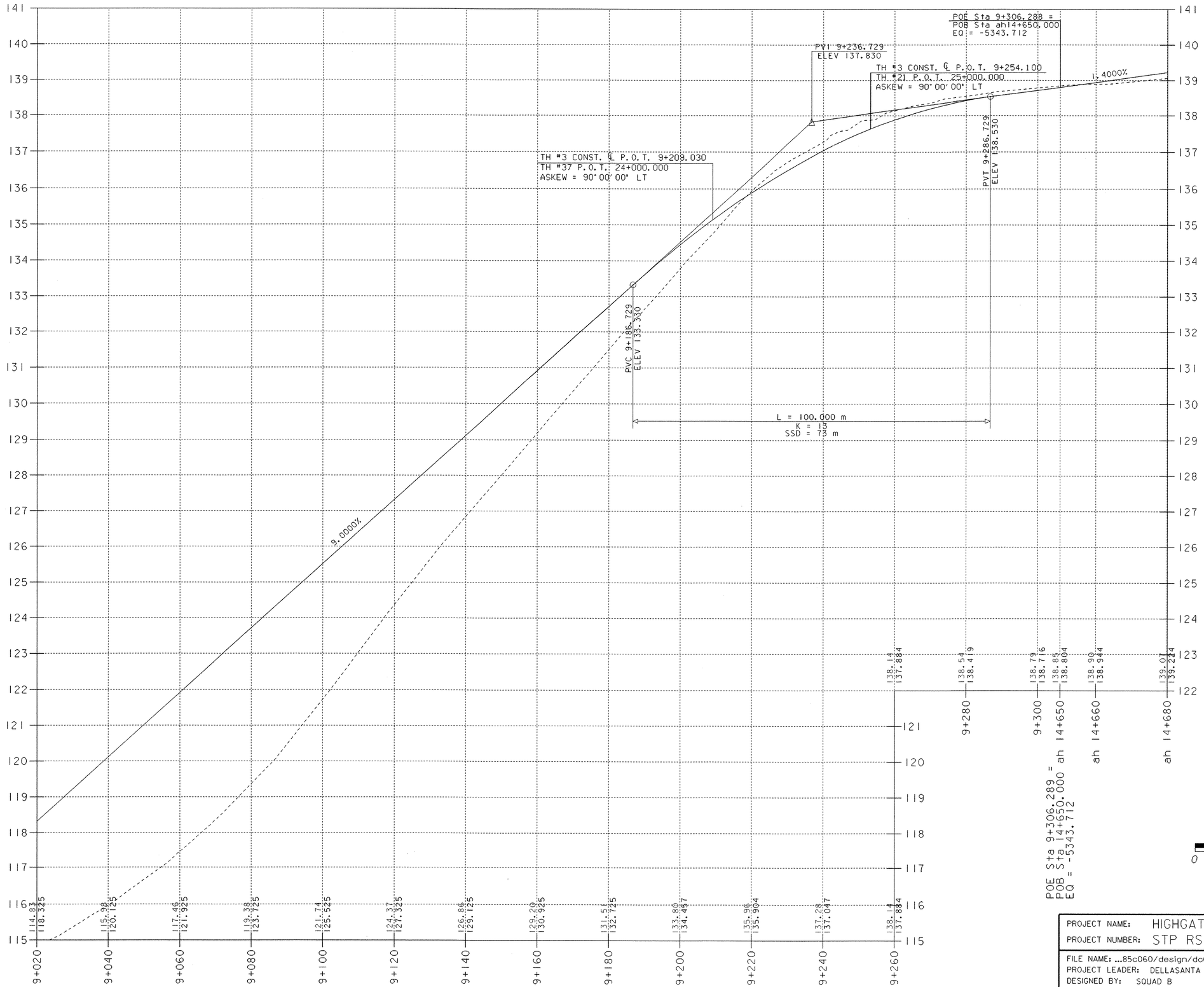

PROJECT NAME:	HIGHGATE - FRANKLIN
PROJECT NUMBER:	STP RS 0301(1) SA
FILE NAME: ...85c060/design/dc060xsl.dgn	PLOT DATE: 09-MAY-2005
PROJECT LEADER: DELLASANTA	DRAWN BY: SQUAD B
DESIGNED BY: SQUAD B	CHECKED BY: SQUAD B
IPARM FILE NAME: dc060p25.i	SHEET 131 OF 450

CONSTRUCT DRIVE
STA ah 14+806.000 LT GRAVEL
STA ah 14+850.000 RT GRAVEL
STA ah 14+895.000 LT GRAVEL
STA ah 14+895.000 RT GRAVEL
STA ah 14+925.000 LT GRAVEL
STA ah 14+927.000 RT GRAVEL
STA ah 15+014.000 RT GRAVEL
STA ah 15+028.000 LT GRAVEL

~~REMOVING AND RESETTING FENCE~~
~~STA ah 14+680.000 TO STA ah 14+795.270 LT~~
~~STA ah 14+816.260 TO STA ah 14+883.450 LT~~
~~STA ah 14+680.000 TO STA ah 14+760.000 RT~~
~~STA ah 14+755.440 LT - 6.1M BACK~~
~~STA ah 14+850.230 RT - 2M BACK~~
~~STA ah 14+854.190 LT - 6.9M BACK~~
~~STA ah 14+855.100 RT - 1.5M BACK~~

VERTICAL GRANITE CURB
~~STA ah 14+852.568 TO STA ah 14+892.611 RT~~
~~STA ah 14+898.500 TO STA ah 14+923.630 RT~~
~~STA ah 14+329.250 TO STA ah 15+012.750 RT~~
~~STA ah 14+951.554 TO STA ah 15+021.110 LT~~
~~STA ah 15+016.130 TO STA ah 15+034.000 RT~~
STA ah 14+854.000 TO STA ah 14+890.500 RT
STA ah 14+899.000 TO STA ah 14+923.000 RT
STA ah 14+932.000 TO STA ah 15+012.500 RT
STA ah 14+952.000 TO STA ah 15+019.000 LT
STA ah 15+019.000 TO STA ah 15+036.000 RT

HYDRANT, RELOCATE
STA ah 14+880.720 RT - ~~MOVE 9.780M BACK FROM ℄~~

~~REMOVING AND RESETTING FENCE (MOD)~~
~~STA ah 14+957.000 TO STA ah 15+011.000 RT~~

CONSTRUCT SPECIAL DITCH
STA ah 14+680.000 TO STA ah 14+845.000 RT

STONE FILL, TYPE II
STA ah 14+680.000 TO STA ah 14+845.000 RT

VT STATE PLANE GRID

END PROJECT
STP RS 0301(I) SA
TH#3 ℄ P.O.T. ah 15+034.000
BEGIN PROJECT
STP 0301(18) (2004)

PI ah 14+978.362 =
ah 14+977.392

CURVE #34
Δ 14° 35' 46" RT
R 700.000 M
L 178.324 M
T 89.647 M
E 5.717 M
B 3.000%

STA ah 14+932.900 TO STA ah 14+932.140 RT
REMOVE EXISTING 300mm CMP

MATCHLINE
SEE SHEET 130 OF 450
PASTURE
FARMLAND
CONCRETE WATERING TUB
SHED
BARN
BARN
SIGN
STUMP
STUMP
APPROXIMATE LOCATION OF SILAGE BUNKERS
FIELD
GARAGE
BM
RR SKIPE IN MAPLE
144.043
APPROX. LOCATION OF LEACH FIELD
APPROX. LOCATION OF LEACH FIELD
1½SWF HOUSE
FARMLAND
GRAVEL
GRAVEL
N51° 00' 53" E
238.715
ah 14+700
ah 14+800
ah 14+900
ah 15+000
5.8M
5.2M
6.5M
4.0M
3.3M
2.2M
1.5M
AERIAL E&T
CZ
W
PC
PT
R 5.5
R 7.5
900 MPL
600 MPL SAVE
600 MPL
450 MPL
600 MPL
600 MPL
600 MPL
450 MPL
150 ELM
GUY
GUY
GUY
GUY

STA ah 14+680.000 TO STA ah 14+760.000 RT
NEW 200mm x 165M UNDERDRAIN
W/ FLUSHING BASIN AT STA ah 14+760.000 RT
12M

STA ah 14+759 ℄
REMOVE EXISTING 460mm CMP

STA ah 14+800.000 ℄
NEW 450mm x 76M CMAP-152mm-SR PCCSP-163mm-SR CPEP
STONE FILL TYPE II AT OUTLET (L=3.6M, D=0.6M, W=0.675M)
NEW DI AND CAST IRON COVER WITH FRAME

STA ah 14+800.000
NEW 200mm x 49M UNDERDRAIN
W/ FLUSHING BASIN AT STA ah 14+800.000 RT
58M

STA ah 14+800.000 TO STA ah 14+840.060 RT
NEW 200mm x 40M UNDERDRAIN
W/ FLUSHING BASIN AT STA ah 14+840.060 RT
58M

STA ah 14+858.000 TO STA ah 14+859.000 RT
NEW 450mm x 60M CMAP-152mm-SR PCCSP-163mm-SR CPEP
WITH NEW DI AT INLET

STA ah 14+956.947 RT

STA ah 14+895.283 TO STA ah 14+856.947 RT
REMOVE EXISTING 300mm CMP

STA ah 14+858.000 TO STA ah 14+940.000 RT
NEW 200mm x 82M UNDERDRAIN
W/ FLUSHING BASIN AT STA ah 14+940.000 RT

STA ah 14+960 ℄
REMOVE EXISTING 300mm CMP

STA ah 14+940.000 TO STA ah 15+011.000 RT
NEW 200mm x 71M UNDERDRAIN
W/ FLUSHING BASIN AT STA ah 14+940.000 RT

STA ah 15+011.000
NEW 450mm x 22M PCCSP-163mm
CONNECT TO EXISTING PIPE FROM PROJECT STP 0301(18)
NEW DI AT STA ah 15+011.000 RT
22M

STA ah 15+011.000 TO STA ah 15+034.000 RT
NEW 200mm x 23M UNDERDRAIN
CONNECT TO EXISTING PIPE FROM PROJECT STP 0301(18)
W/ FLUSHING BASIN AT STA ah 15+011.000 RT

EXTEND EXISTING FIELD DRAIN AS NEEDED
EXTEND EXISTING FIELD DRAIN AS NEEDED
TREE PROTECTION ZONE SEE LANDSCAPING PLANS
MOVE EXISTING HYDRANT AT STA ah 14+880.720 RT - ~~MOVE 9.780M BACK FROM ℄~~
EXTEND EXISTING FIELD DRAIN AS NEEDED
TREE PROTECTION ZONE SEE LANDSCAPING PLANS

0 10 20 30
SCALE IN METERS

○ DENOTES TREE OR STUMP REMOVAL

NOTES:
1. ALL SIDE ROAD RADII SHALL BE 11M UNLESS OTHERWISE NOTED. REFER TO STD B-12M
2. ALL DRIVE RADII SHALL BE 6M UNLESS OTHERWISE NOTED. REFER TO STD B-71M

PROJECT NAME:	HIGHGATE - FRANKLIN
PROJECT NUMBER:	STP RS 0301(I) SA
FILE NAME: ...85c060/design/dc060bdr.dgn	PLOT DATE: 09-MAY-2005
PROJECT LEADER: DELLASANTA	DRAWN BY: SQUAD B
DESIGNED BY: SQUAD B	CHECKED BY: SQUAD B
IPARM FILE NAME: dc060126.1	SHEET 132 OF 450

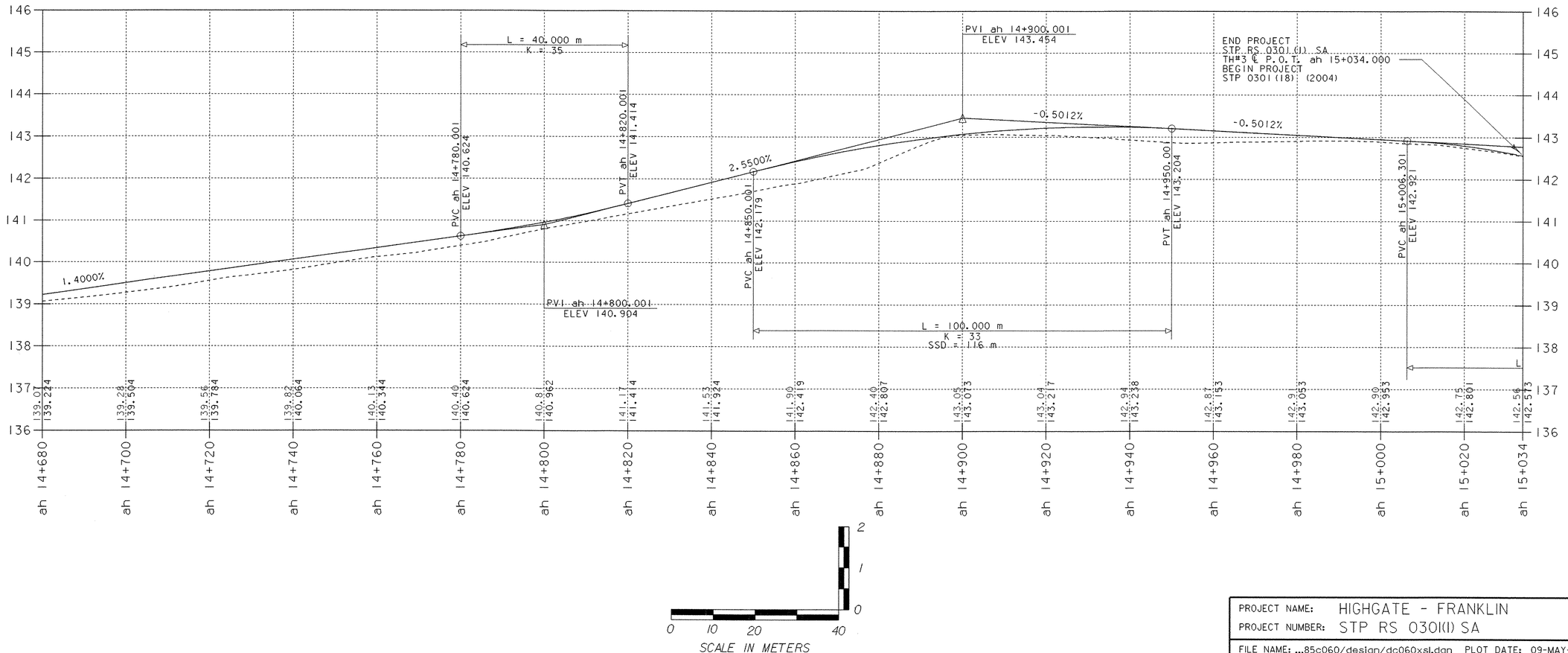

PROJECT NAME:	HIGHGATE - FRANKLIN
PROJECT NUMBER:	STP RS 0301(1) SA
FILE NAME: ...85c060/design/dc060xsl.dgn	PLOT DATE: 09-MAY-2005
PROJECT LEADER: DELLASANTA	DRAWN BY: SQUAD B
DESIGNED BY: SQUAD B	CHECKED BY: SQUAD B
IPARM FILE NAME: dc060p26.i	SHEET 133 OF 450

SILT FENCE
STA 1+000.000 TO STA 1+081.100 LT
STA 1+002.900 TO STA 1+020.000 LT
STA 1+002.900 TO STA 1+049.000 LT
STA 1+003.100 TO STA 1+034.400 RT
STA 1+017.300 TO STA 1+049.600 RT

ROCK CHECK DAM
STA 1+019 RT
STA 1+027 RT
STA 1+038 RT
STA 1+051 LT
STA 1+060 LT
STA 1+089 RT

EROSION MATTING
STA 1+050.000 TO STA 1+075.000 RT
STA 1+055.000 TO STA 1+087.000 LT
STA 1+092.000 TO STA 1+113.000 RT

SNOW FENCE
STA 1+004.400 TO STA 1+022.900 LT

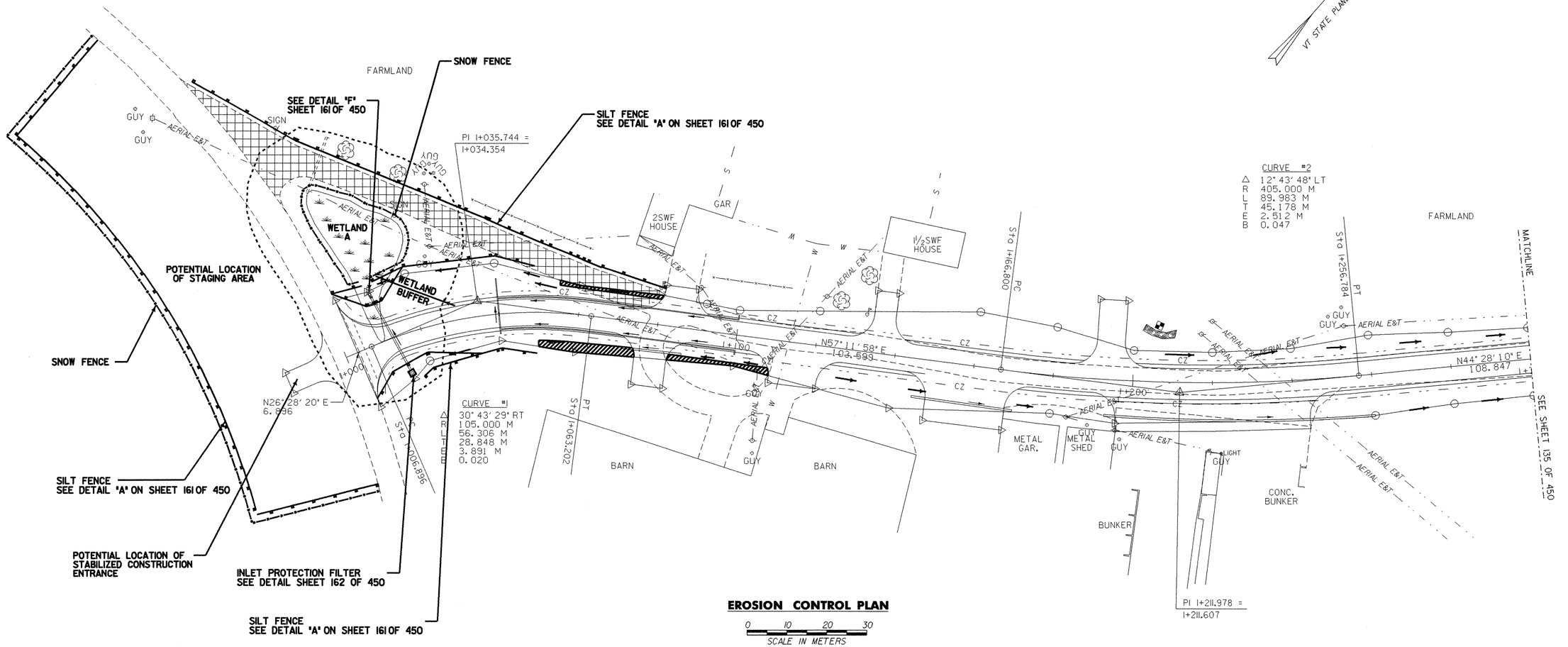

EROSION CONTROL PLAN

0 10 20 30
SCALE IN METERS

LEGEND

- SILT FENCE
- SNOW FENCE
- DIRECTION OF DITCH FLOW
- PROJECT DEMARCATION FENCE (PDF)
- WETLAND BUFFER
- STABILIZED CONSTRUCTION ENTRANCE
- EROSION MATTING
- PAVEMENT REMOVAL

NOTES:

1. CONSTRUCTION SHALL TAKE PLACE BETWEEN MAY 1 AND OCTOBER 15. CONSTRUCTION IN A WATERCOURSE CHANNEL SHALL TAKE PLACE BETWEEN JUNE 1 AND OCTOBER 1. THE CONTRACTOR SHALL SUBMIT ANY CHANGES TO THIS SCHEDULE TO THE RESIDENT ENGINEER FOR APPROVAL AT OR BEFORE THE PRE-CONSTRUCTION MEETING.
2. THE LIMIT OF DISTURBANCE FOR THIS PROJECT SHALL BE THE LIMIT OF RIGHT-OF-WAY AS SHOWN ON THE EASEMENTS RIGHT-OF-WAY PLANS. UNLESS OTHERWISE SPECIFIED IN THE PLANS. CONSTRUCTION FENCE SHALL BE USED TO DELINEATE THE LIMIT OF DISTURBANCE IN AND AROUND WATERCOURSES AND WETLANDS. THE CONTRACTOR SHALL NOT IMPACT AREAS OUTSIDE THE LIMIT OF DISTURBANCE.
3. SEE THE EROSION CONTROL DETAIL SHEET FOR SEEDING FORMULAS AND ROCK CHECK DAM DETAIL.
4. CONTRACTOR TO STABILIZE ANY TEMPORARY CHANNELS AND DITCHES WITH STONE.
5. SILT FENCE LOCATIONS ARE APPROXIMATE ONLY. SILT FENCE TO BE INSTALLED ALONG THE CONTOURS.
6. MULCH SHALL BE APPLIED TO EXPOSED SOIL AT THE END OF EACH WORK DAY. SEED AND MULCH SHALL BE APPLIED TO SOIL WITHIN 48 HOURS OF FINAL DISTURBANCE. SEED AND MULCH SHALL ALSO BE APPLIED TO ANY TOPSOIL STOCKPILES. SEE APPLICATION RATES ON SHEET 3 OF 450.

McFARLAND-JOHNSON, INC

PROJECT NAME: HIGHGATE - FRANKLIN
PROJECT NUMBER: STP RS 0301(1) SA

FILE NAME: ...85c060/design/dc060ero.dgn
PROJECT LEADER: DELLASANTA
DESIGNED BY: SQUAD B
IPARM FILE NAME: dc060er1.i
PLOT DATE: 09-MAY-2005
DRAWN BY: SQUAD B
CHECKED BY: SQUAD B
SHEET 134 OF 450

SILT FENCE

STA 1+606.700 TO STA 1+633.700 LT
STA 1+606.700 TO STA 1+646.400 LT
STA 1+635.200 TO STA 1+660.000 LT
STA 1+570.600 TO STA 1+601.300 RT
STA 1+596.600 TO STA 1+620.000 RT
STA 1+602.300 TO STA 1+620.000 RT

ROCK CHECK DAM

STA 1+538 LT
STA 1+547 LT
STA 1+556 LT
STA 1+579 LT
STA 1+622 RT

EROSION MATTING

STA 1+390.000 TO STA 1+406.000 RT
STA 1+630.000 TO STA 1+660.000 RT

SNOW FENCE

STA 1+609.200 TO STA 1+636.200 LT
STA 1+637.200 TO STA 1+657.100 LT
STA 1+570.600 TO STA 1+599.700 RT
STA 1+601.000 TO STA 1+610.200 RT

PERMANENT SEDIMENT TRAP

STA 1+538.000 TO STA 1+542.000 RT
STA 1+588.000 TO STA 1+592.000 LT

VAST Metric

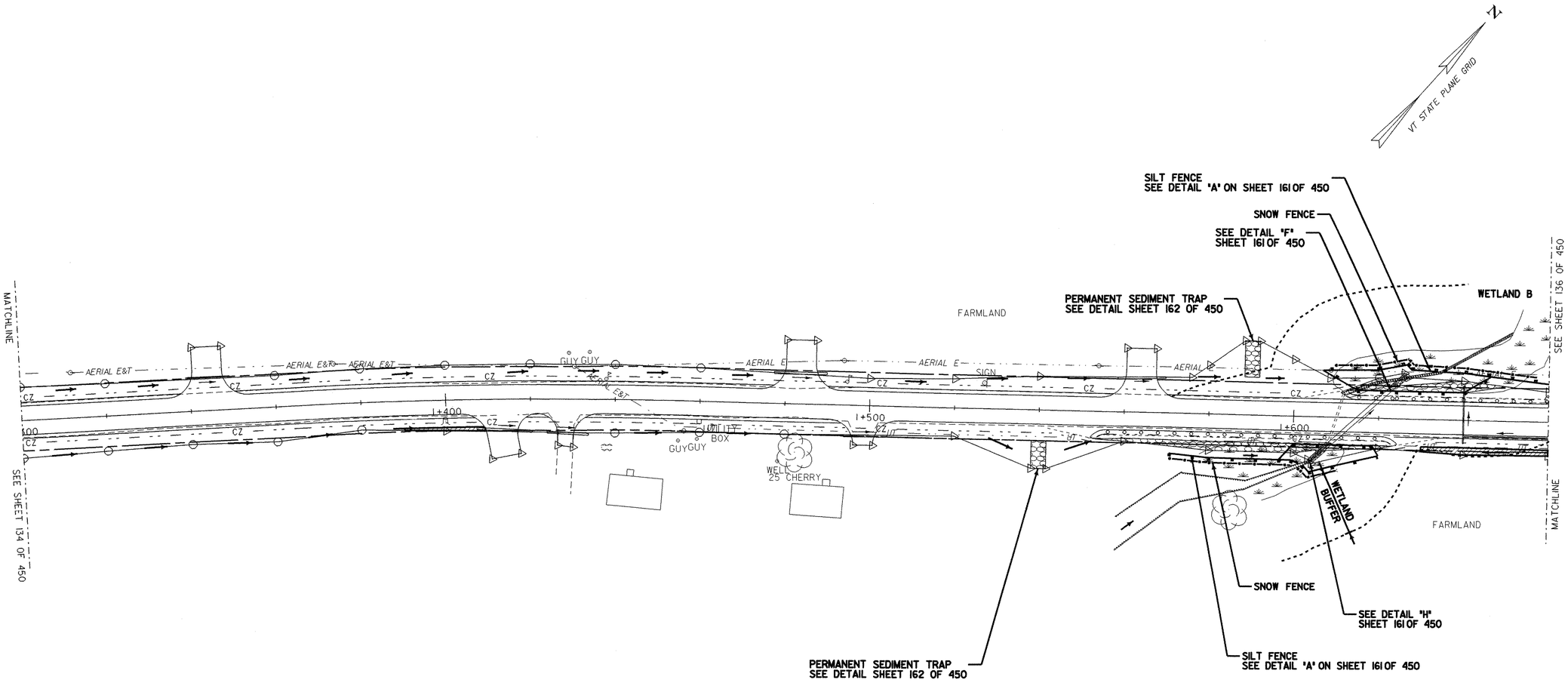

EROSION CONTROL PLAN

0 10 20 30
SCALE IN METERS

LEGEND

- SILT FENCE
- SNOW FENCE
- DIRECTION OF DITCH FLOW
- PDF — PROJECT DEMARCATION FENCE
- WETLAND BUFFER
- STABILIZED CONSTRUCTION ENTRANCE
- EROSION MATTING

NOTES:

1. CONSTRUCTION SHALL TAKE PLACE BETWEEN MAY 1 AND OCTOBER 15. CONSTRUCTION IN A WATERCOURSE CHANNEL SHALL TAKE PLACE BETWEEN JUNE 1 AND OCTOBER 1. THE CONTRACTOR SHALL SUBMIT ANY CHANGES TO THIS SCHEDULE TO THE RESIDENT ENGINEER FOR APPROVAL AT OR BEFORE THE PRE-CONSTRUCTION MEETING.
2. THE LIMIT OF DISTURBANCE FOR THIS PROJECT SHALL BE THE LIMIT OF RIGHT-OF-WAY AS SHOWN ON THE EASEMENTS RIGHT-OF-WAY PLANS. UNLESS OTHERWISE SPECIFIED IN THE PLANS. CONSTRUCTION FENCE SHALL BE USED TO DELINEATE THE LIMIT OF DISTURBANCE IN AND AROUND WATERCOURSES AND WETLANDS. THE CONTRACTOR SHALL NOT IMPACT AREAS OUTSIDE THE LIMIT OF DISTURBANCE.
3. SEE THE EROSION CONTROL DETAIL SHEET FOR SEEDING FORMULAS AND ROCK CHECK DAM DETAIL.
4. CONTRACTOR TO STABILIZE ANY TEMPORARY CHANNELS AND DITCHES WITH STONE.
5. SILT FENCE LOCATIONS ARE APPROXIMATE ONLY. SILT FENCE TO BE INSTALLED ALONG THE CONTOURS.
6. MULCH SHALL BE APPLIED TO EXPOSED SOIL AT THE END OF EACH WORK DAY. SEED AND MULCH SHALL BE APPLIED TO SOIL WITHIN 48 HOURS OF FINAL DISTURBANCE. SEED AND MULCH SHALL ALSO BE APPLIED TO ANY TOPSOIL STOCKPILES. SEE APPLICATION RATES ON SHEET 3 OF 450.

McFARLAND-JOHNSON, INC

PROJECT NAME: HIGHGATE - FRANKLIN
PROJECT NUMBER: STP RS 0301(1) SA

FILE NAME: ...85c060/design/dc060ero.dgn PLOT DATE: 09-MAY-2005
PROJECT LEADER: DELLASANTA DRAWN BY: SQUAD B
DESIGNED BY: SQUAD B CHECKED BY: SQUAD B
IPARM FILE NAME: dc060er2.1 SHEET 135 OF 450

SILT FENCE
STA 1+660.000 TO STA 1+764.500 LT
STA 1+751.500 TO STA 1+784.100 LT
STA 1+766.000 TO STA 1+824.900 LT
STA 1+840.000 TO STA 1+890.000 LT
STA 1+842.900 TO STA 1+865.000 LT
STA 1+730.400 TO STA 1+790.000 RT
STA 1+756.000 TO STA 1+769.800 RT
STA 1+842.800 TO STA 1+865.600 RT
STA 1+842.800 TO STA 1+890.000 RT

ROCK CHECK DAM
STA 1+671.913 RT
STA 1+760.864 RT
STA 1+764.952 RT
STA 1+826.601 RT
STA 1+840.506 RT
STA 1+849.957 RT
STA 1+891.871 LT
STA 1+942.572 LT
STA 1+891.814 RT
STA 1+942.572 RT
STA 2+009.093 RT
STA 2+009.097 LT

SNOW FENCE
STA 1+746.200 TO STA 1+764.400 LT
STA 1+766.000 TO STA 1+771.500 LT

EROSION MATTING
STA 1+660.000 TO STA 1+710.000 RT
STA 1+790.000 TO STA 1+827.000 RT
STA 1+890.000 TO STA 1+966.000 RT
STA 1+976.000 TO STA 1+990.000 RT

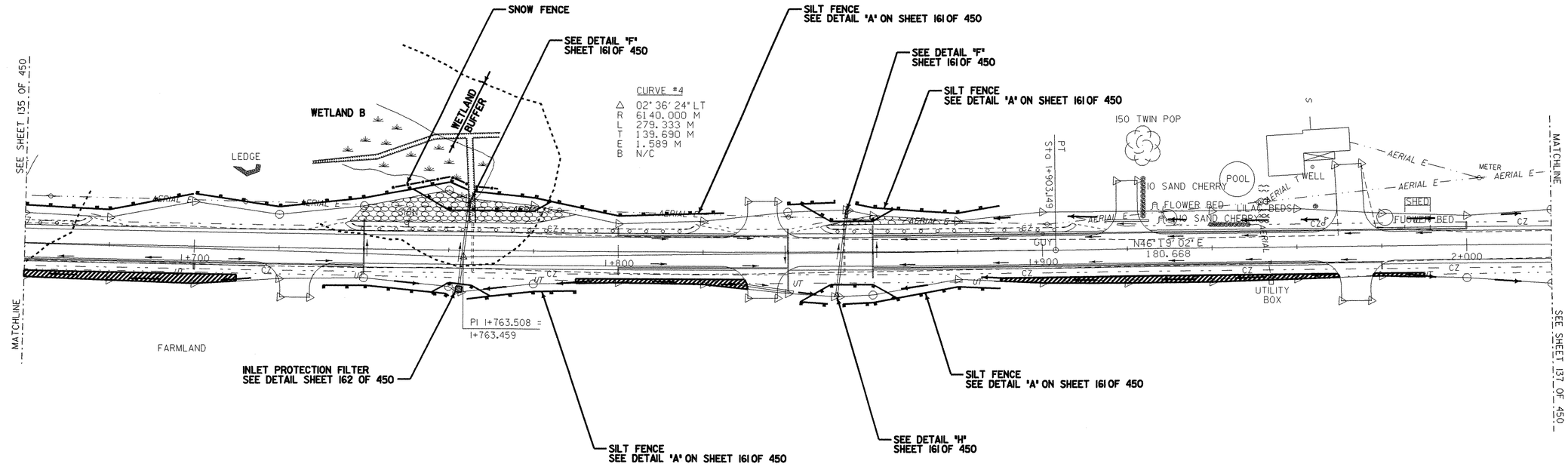

EROSION CONTROL PLAN

0 10 20 30
SCALE IN METERS

LEGEND

- SILT FENCE
- SNOW FENCE
- DIRECTION OF DITCH FLOW
- PROJECT DEMARCATION FENCE
- WETLAND BUFFER
- STABILIZED CONSTRUCTION ENTRANCE
- EROSION MATTING

NOTES:

1. CONSTRUCTION SHALL TAKE PLACE BETWEEN MAY 1 AND OCTOBER 15. CONSTRUCTION IN A WATERCOURSE CHANNEL SHALL TAKE PLACE BETWEEN JUNE 1 AND OCTOBER 1. THE CONTRACTOR SHALL SUBMIT ANY CHANGES TO THIS SCHEDULE TO THE RESIDENT ENGINEER FOR APPROVAL AT OR BEFORE THE PRE-CONSTRUCTION MEETING.
2. THE LIMIT OF DISTURBANCE FOR THIS PROJECT SHALL BE THE LIMIT OF RIGHT-OF-WAY AS SHOWN ON THE EASEMENTS RIGHT-OF-WAY PLANS. UNLESS OTHERWISE SPECIFIED IN THE PLANS. CONSTRUCTION FENCE SHALL BE USED TO DELINEATE THE LIMIT OF DISTURBANCE IN AND AROUND WATERCOURSES AND WETLANDS. THE CONTRACTOR SHALL NOT IMPACT AREAS OUTSIDE THE LIMIT OF DISTURBANCE.
3. SEE THE EROSION CONTROL DETAIL SHEET FOR SEEDING FORMULAS AND ROCK CHECK DAM DETAIL.
4. CONTRACTOR TO STABILIZE ANY TEMPORARY CHANNELS AND DITCHES WITH STONE.
5. SILT FENCE LOCATIONS ARE APPROXIMATE ONLY. SILT FENCE TO BE INSTALLED ALONG THE CONTOURS.
6. MULCH SHALL BE APPLIED TO EXPOSED SOIL AT THE END OF EACH WORK DAY. SEED AND MULCH SHALL BE APPLIED TO SOIL WITHIN 48 HOURS OF FINAL DISTURBANCE. SEED AND MULCH SHALL ALSO BE APPLIED TO ANY TOPSOIL STOCKPILES. SEE APPLICATION RATES ON SHEET 3 OF 450.

McFARLAND-JOHNSON, INC

PROJECT NAME: HIGHGATE - FRANKLIN
PROJECT NUMBER: STP RS 0301(1) SA

FILE NAME: ...85c060/design/dc060ero.dgn PLOT DATE: 09-MAY-2005
PROJECT LEADER: DELLASANTA DRAWN BY: SQUAD B
DESIGNED BY: SQUAD B CHECKED BY: SQUAD B
IPARM FILE NAME: dc060er3.1 SHEET 136 OF 450

SILT FENCE
STA 2+177.500 TO STA 2+221.300 LT
STA 2+222.900 TO STA 2+238.700 LT
STA 2+202.500 TO STA 2+211.600 RT
STA 2+212.900 TO STA 2+230.000 RT

ROCK CHECK DAM
STA 2+081 RT
STA 2+089 RT
STA 2+097 RT
STA 2+105 RT
STA 2+112 RT
STA 2+119 RT
STA 2+292 LT
STA 2+297 RT
STA 2+304 LT
STA 2+309 RT
STA 2+318 LT
STA 2+341 LT
STA 2+372 RT

SNOW FENCE
STA 2+177.600 TO STA 2+221.500 LT
STA 2+223.300 TO STA 2+238.900 LT
STA 2+202.300 TO STA 2+211.100 RT
STA 2+212.700 TO STA 2+233.900 RT

EROSION MATTING
STA 2+282.000 TO STA 2+368.000 LT
STA 2+292.000 TO STA 2+380.000 RT

PERMANENT SEDIMENT TRAP
STA 2+138.000 TO STA 2+142.000 RT
STA 2+238.000 TO STA 2+242.000 RT

MDOT Metric

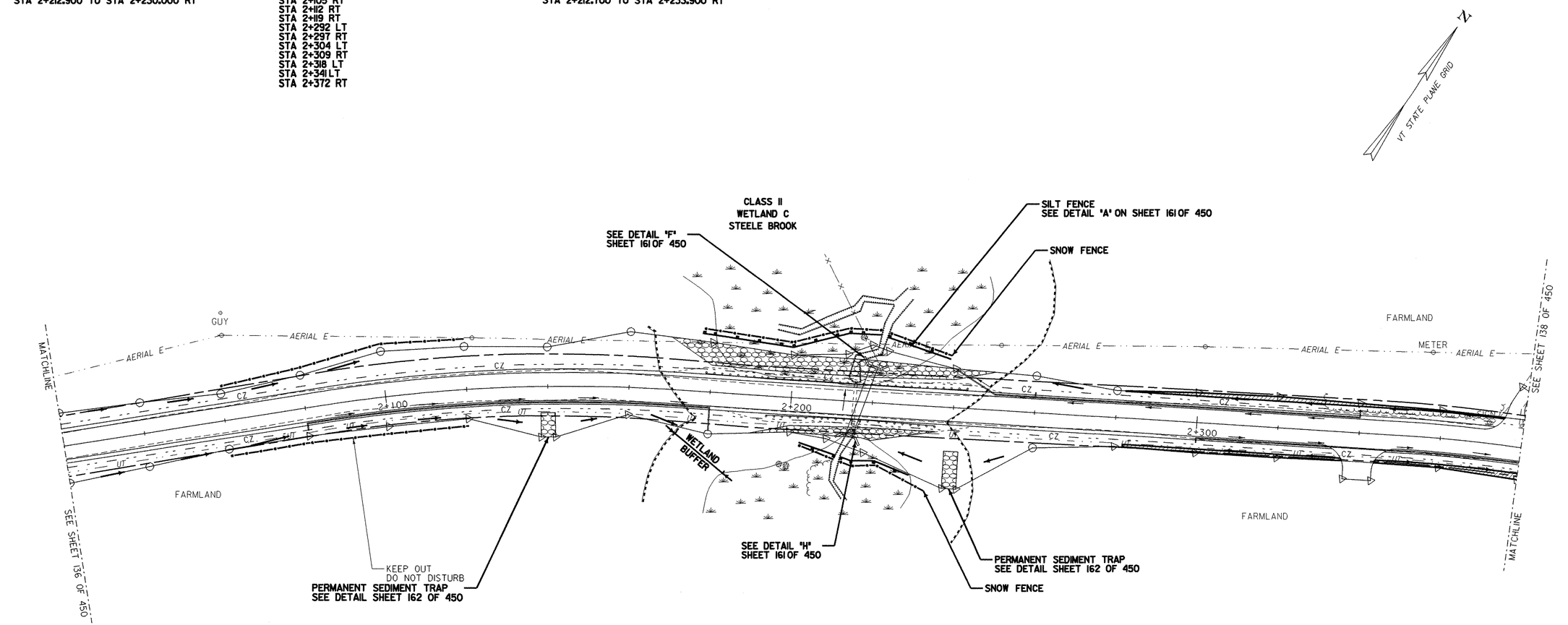

EROSION CONTROL PLAN

0 10 20 30
SCALE IN METERS

LEGEND

- SILT FENCE
- SNOW FENCE
- DIRECTION OF DITCH FLOW
- PDF — PROJECT DEMARCATION FENCE
- WETLAND BUFFER
- STABILIZED CONSTRUCTION ENTRANCE
- EROSION MATTING

NOTES:

1. CONSTRUCTION SHALL TAKE PLACE BETWEEN MAY 1 AND OCTOBER 15. CONSTRUCTION IN A WATERCOURSE CHANNEL SHALL TAKE PLACE BETWEEN JUNE 1 AND OCTOBER 1. THE CONTRACTOR SHALL SUBMIT ANY CHANGES TO THIS SCHEDULE TO THE RESIDENT ENGINEER FOR APPROVAL AT OR BEFORE THE PRE-CONSTRUCTION MEETING.
2. THE LIMIT OF DISTURBANCE FOR THIS PROJECT SHALL BE THE LIMIT OF RIGHT-OF-WAY AS SHOWN ON THE EASEMENTS RIGHT-OF-WAY PLANS. UNLESS OTHERWISE SPECIFIED IN THE PLANS. CONSTRUCTION FENCE SHALL BE USED TO DELINEATE THE LIMIT OF DISTURBANCE IN AND AROUND WATERCOURSES AND WETLANDS. THE CONTRACTOR SHALL NOT IMPACT AREAS OUTSIDE THE LIMIT OF DISTURBANCE.
3. SEE THE EROSION CONTROL DETAIL SHEET FOR SEEDING FORMULAS AND ROCK CHECK DAM DETAIL.
4. CONTRACTOR TO STABILIZE ANY TEMPORARY CHANNELS AND DITCHES WITH STONE.
5. SILT FENCE LOCATIONS ARE APPROXIMATE ONLY. SILT FENCE TO BE INSTALLED ALONG THE CONTOURS.
6. MULCH SHALL BE APPLIED TO EXPOSED SOIL AT THE END OF EACH WORK DAY. SEED AND MULCH SHALL BE APPLIED TO SOIL WITHIN 48 HOURS OF FINAL DISTURBANCE. SEED AND MULCH SHALL ALSO BE APPLIED TO ANY TOPSOIL STOCKPILES. SEE APPLICATION RATES ON SHEET 3 OF 450.

McFARLAND-JOHNSON, INC

PROJECT NAME: HIGHGATE - FRANKLIN
PROJECT NUMBER: STP RS 0301(1) SA

FILE NAME: ...85c060/design/dc060ero.dgn PLOT DATE: 09-MAY-2005
PROJECT LEADER: DELLASANTA DRAWN BY: SQUAD B
DESIGNED BY: SQUAD B CHECKED BY: SQUAD B
IPARM FILE NAME: dc060er4.i SHEET 137 OF 450

SNOW FENCE

STA 2+465.100 TO STA 2+530.900 LT
STA 2+625.400 TO STA 2+647.100 LT
STA 2+448.500 TO STA 2+478.200 RT
STA 2+481.200 TO STA 2+504.800 RT
STA 2+625.400 TO STA 2+659.100 RT

PERMANENT SEDIMENT TRAP

STA 2+538.000 TO STA 2+542.000 LT
STA 2+658.000 TO STA 2+662.000 LT
STA 2+658.000 TO STA 2+662.000 RT

SILT FENCE

STA 2+465.600 TO STA 2+530.900 LT
STA 2+616.600 TO STA 2+648.600 LT
STA 2+616.600 TO STA 2+648.600 LT
STA 2+448.700 TO STA 2+480.000 RT
STA 2+482.000 TO STA 2+504.700 RT
STA 2+618.600 TO STA 2+649.800 RT
STA 2+618.600 TO STA 2+649.800 RT

ROCK CHECK DAM

STA 2+387 RT
STA 2+386 LT
STA 2+395 LT
STA 2+398 RT
STA 2+404 RT
STA 2+404 LT
STA 2+409 RT
STA 2+413 LT
STA 2+422 LT
STA 2+428 LT
STA 2+434 LT
STA 2+440 LT
STA 2+447 LT
STA 2+453 LT
STA 2+460 LT
STA 2+533 RT
STA 2+540 RT
STA 2+589 RT

EROSION MATTING

STA 2+560.000 TO STA 2+585.000 LT
STA 2+571.000 TO STA 2+585.000 RT
STA 2+710.000 TO STA 2+730.000 LT

MDOT Metric

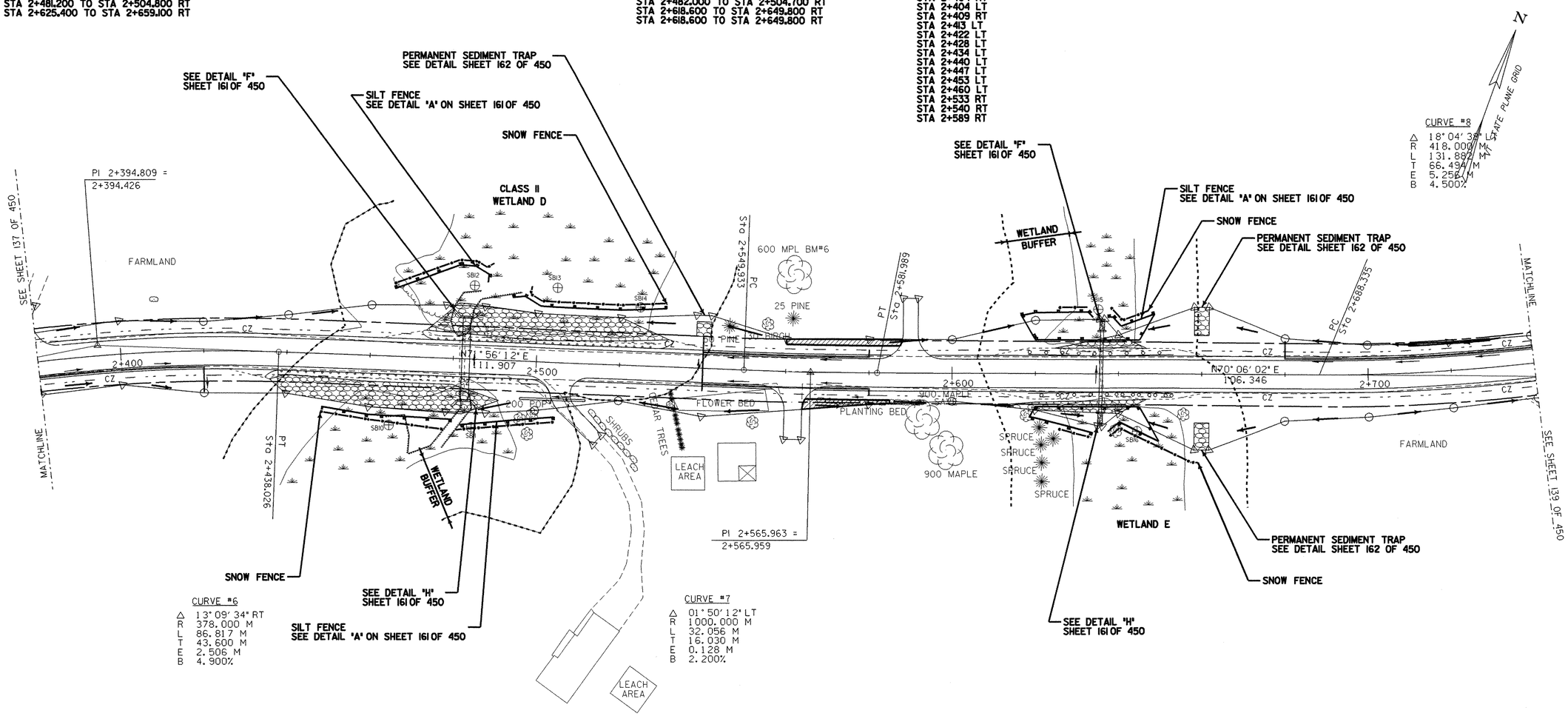

EROSION CONTROL PLAN

0 10 20 30
SCALE IN METERS

LEGEND

- SILT FENCE
- SNOW FENCE
- DIRECTION OF DITCH FLOW
- PDF — PROJECT DEMARCATION FENCE
- WETLAND BUFFER
- STABILIZED CONSTRUCTION ENTRANCE
- EROSION MATTING

NOTES:

1. CONSTRUCTION SHALL TAKE PLACE BETWEEN MAY 1 AND OCTOBER 15. CONSTRUCTION IN A WATERCOURSE CHANNEL SHALL TAKE PLACE BETWEEN JUNE 1 AND OCTOBER 1. THE CONTRACTOR SHALL SUBMIT ANY CHANGES TO THIS SCHEDULE TO THE RESIDENT ENGINEER FOR APPROVAL AT OR BEFORE THE PRE-CONSTRUCTION MEETING.
2. THE LIMIT OF DISTURBANCE FOR THIS PROJECT SHALL BE THE LIMIT OF RIGHT-OF-WAY AS SHOWN ON THE EASEMENTS RIGHT-OF-WAY PLANS. UNLESS OTHERWISE SPECIFIED IN THE PLANS. CONSTRUCTION FENCE SHALL BE USED TO DELINEATE THE LIMIT OF DISTURBANCE IN AND AROUND WATERCOURSES AND WETLANDS. THE CONTRACTOR SHALL NOT IMPACT AREAS OUTSIDE THE LIMIT OF DISTURBANCE.
3. SEE THE EROSION CONTROL DETAIL SHEET FOR SEEDING FORMULAS AND ROCK CHECK DAM DETAIL.
4. CONTRACTOR TO STABILIZE ANY TEMPORARY CHANNELS AND DITCHES WITH STONE.
5. SILT FENCE LOCATIONS ARE APPROXIMATE ONLY. SILT FENCE TO BE INSTALLED ALONG THE CONTOURS.
6. MULCH SHALL BE APPLIED TO EXPOSED SOIL AT THE END OF EACH WORK DAY. SEED AND MULCH SHALL BE APPLIED TO SOIL WITHIN 48 HOURS OF FINAL DISTURBANCE. SEED AND MULCH SHALL ALSO BE APPLIED TO ANY TOPSOIL STOCKPILES. SEE APPLICATION RATES ON SHEET 3 OF 450.

McFARLAND-JOHNSON, INC

PROJECT NAME: HIGHGATE - FRANKLIN
PROJECT NUMBER: STP RS 0301(1) SA

FILE NAME: ...85c060/design/dc060ero.dgn PLOT DATE: 09-MAY-2005
PROJECT LEADER: DELLASANTA DRAWN BY: SQUAD B
DESIGNED BY: SQUAD B CHECKED BY: SQUAD B
IPARM FILE NAME: dc060er5.1 SHEET 138 OF 450

SNOW FENCE
STA 2+842.7 TO STA 2+864.6 LT

PERMANENT SEDIMENT TRAP
STA 3+098 TO STA 3+100 LT

EROSION MATTING
STA 2+890.000 TO STA 2+910.000 RT
STA 2+950.000 TO STA 3+029.000 RT
STA 2+950.000 TO STA 2+970.000 LT
STA 2+990.000 TO STA 3+029.000 LT
STA 3+050.000 TO STA 3+090.000 RT

SILT FENCE
STA 2+833.3 TO STA 2+865.6 LT
STA 2+833.3 TO STA 2+865.6 LT
STA 2+834.6 TO STA 2+863.9 RT
STA 2+834.6 TO STA 2+863.9 RT

ROCK CHECK DAM
STA 2+833 RT
STA 2+833 LT
STA 2+864 LT
STA 2+866 RT
STA 2+952 RT
STA 3+005 RT
STA 3+017 RT
STA 3+030 RT
STA 3+063 RT
STA 3+076 RT
STA 3+089 RT

VT STATE PLANE GRID

CURVE #9
Δ 09° 37' 57" RT
R 571.000 M
L 95.996 M
T 48.111 M
E 2.023 M
B 3.700%

CURVE #8
Δ 18° 04' 38" LT
R 418.000 M
L 131.882 M
T 66.494 M
E 5.256 M
B 4.500%

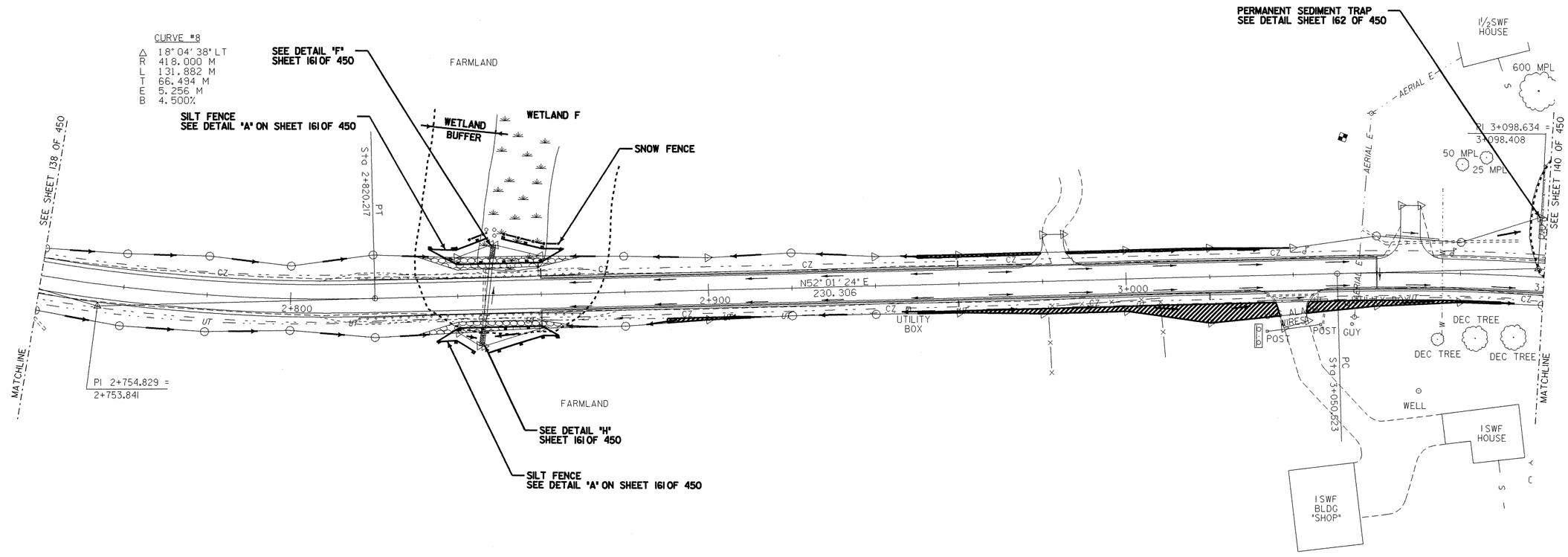

EROSION CONTROL PLAN

0 10 20 30
SCALE IN METERS

LEGEND

- SILT FENCE
- SNOW FENCE
- DIRECTION OF DITCH FLOW
- PROJECT DEMARCATION FENCE
- WETLAND BUFFER
- STABILIZED CONSTRUCTION ENTRANCE
- EROSION MATTING

NOTES:

1. CONSTRUCTION SHALL TAKE PLACE BETWEEN MAY 1 AND OCTOBER 15. CONSTRUCTION IN A WATERCOURSE CHANNEL SHALL TAKE PLACE BETWEEN JUNE 1 AND OCTOBER 1. THE CONTRACTOR SHALL SUBMIT ANY CHANGES TO THIS SCHEDULE TO THE RESIDENT ENGINEER FOR APPROVAL AT OR BEFORE THE PRE-CONSTRUCTION MEETING.
2. THE LIMIT OF DISTURBANCE FOR THIS PROJECT SHALL BE THE LIMIT OF RIGHT-OF-WAY AS SHOWN ON THE EASEMENTS RIGHT-OF-WAY PLANS. UNLESS OTHERWISE SPECIFIED IN THE PLANS. CONSTRUCTION FENCE SHALL BE USED TO DELINEATE THE LIMIT OF DISTURBANCE IN AND AROUND WATERCOURSES AND WETLANDS. THE CONTRACTOR SHALL NOT IMPACT AREAS OUTSIDE THE LIMIT OF DISTURBANCE.
3. SEE THE EROSION CONTROL DETAIL SHEET FOR SEEDING FORMULAS AND ROCK CHECK DAM DETAIL.
4. CONTRACTOR TO STABILIZE ANY TEMPORARY CHANNELS AND DITCHES WITH STONE.
5. SILT FENCE LOCATIONS ARE APPROXIMATE ONLY. SILT FENCE TO BE INSTALLED ALONG THE CONTOURS.
6. MULCH SHALL BE APPLIED TO EXPOSED SOIL AT THE END OF EACH WORK DAY. SEED AND MULCH SHALL BE APPLIED TO SOIL WITHIN 48 HOURS OF FINAL DISTURBANCE. SEED AND MULCH SHALL ALSO BE APPLIED TO ANY TOPSOIL STOCKPILES. SEE APPLICATION RATES ON SHEET 3 OF 450.

McFARLAND-JOHNSON, INC

PROJECT NAME: HIGHGATE - FRANKLIN
PROJECT NUMBER: STP RS 0301(1) SA

FILE NAME: ...85c060/design/dc060ero.dgn PLOT DATE: 09-MAY-2005
PROJECT LEADER: DELLASANTA DRAWN BY: SQUAD B
DESIGNED BY: SQUAD B CHECKED BY: SQUAD B
IPARM FILE NAME: dc060er6.i SHEET 139 OF 450

SNOW FENCE
STA 3+108.1 TO STA 3+156.9 LT
STA 3+129.9 TO STA 3+144.8 RT
STA 3+148.4 TO STA 3+155.6 RT

PERMANENT SEDIMENT TRAP
STA 3+100 TO STA 3+102 LT
STA 3+178 TO STA 3+182 LT
STA 3+178 TO STA 3+182 RT
STA 3+458 TO STA 3+460 LT
STA 3+458 TO STA 3+460 RT

SILT FENCE
STA 3+107.8 TO STA 3+156.1 LT
STA 3+160.1 TO STA 3+177.8 LT
STA 3+280.0 TO STA 3+396.5 LT
STA 3+319.8 TO STA 3+360.2 LT
STA 3+130.2 TO STA 3+145.0 RT
STA 3+148.4 TO STA 3+155.1 RT
STA 3+280.0 TO STA 3+390.3 RT
STA 3+319.9 TO STA 3+360.2 RT

EROSION MATTING
STA 3+390.000 TO STA 3+450.000 RT

ROCK CHECK DAM
STA 3+413 RT
STA 3+429 RT

VAOT Metric

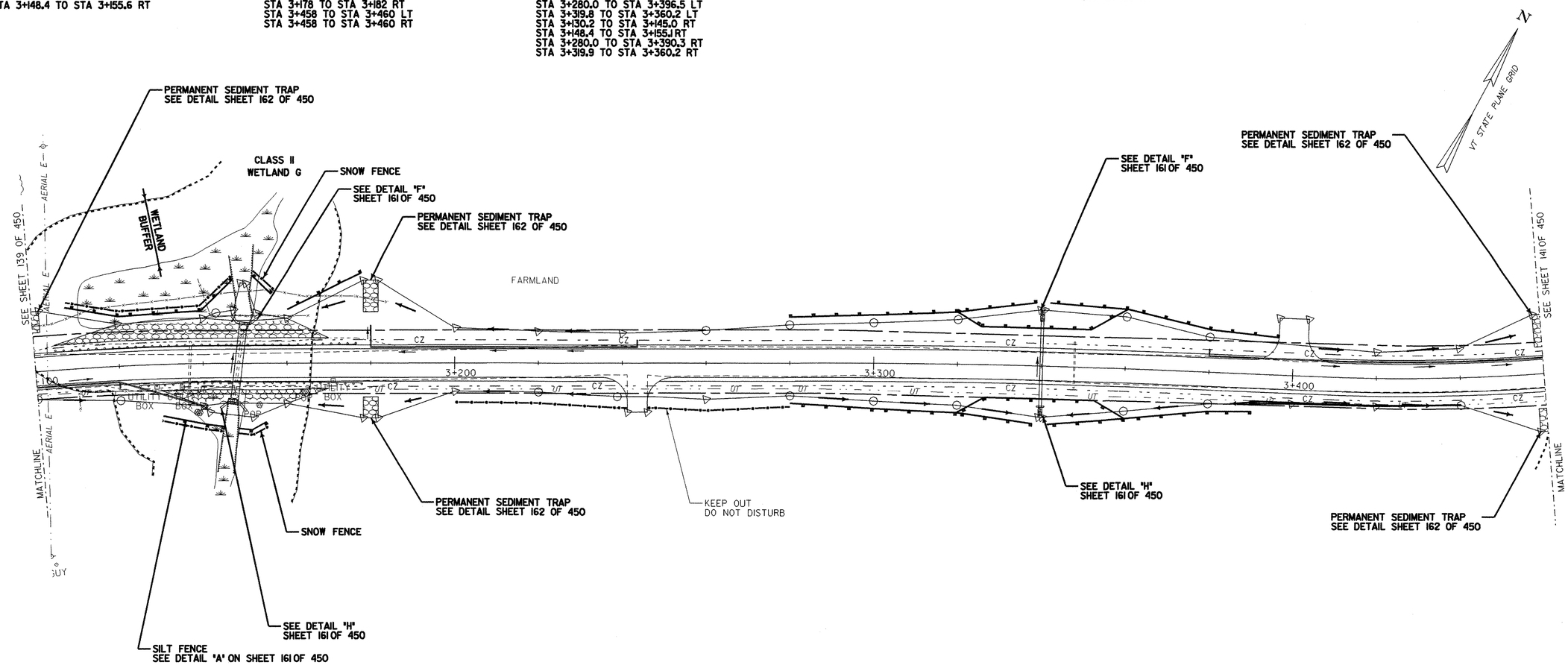

EROSION CONTROL PLAN

0 10 20 30
SCALE IN METERS

LEGEND

- SILT FENCE
- SNOW FENCE
- DIRECTION OF DITCH FLOW
- PROJECT DEMARCATION FENCE
- WETLAND BUFFER
- STABILIZED CONSTRUCTION ENTRANCE
- EROSION MATTING

NOTES:

1. CONSTRUCTION SHALL TAKE PLACE BETWEEN MAY 1 AND OCTOBER 15. CONSTRUCTION IN A WATERCOURSE CHANNEL SHALL TAKE PLACE BETWEEN JUNE 1 AND OCTOBER 1. THE CONTRACTOR SHALL SUBMIT ANY CHANGES TO THIS SCHEDULE TO THE RESIDENT ENGINEER FOR APPROVAL AT OR BEFORE THE PRE-CONSTRUCTION MEETING.
2. THE LIMIT OF DISTURBANCE FOR THIS PROJECT SHALL BE THE LIMIT OF RIGHT-OF-WAY AS SHOWN ON THE EASEMENTS RIGHT-OF-WAY PLANS. UNLESS OTHERWISE SPECIFIED IN THE PLANS, CONSTRUCTION FENCE SHALL BE USED TO DELINEATE THE LIMIT OF DISTURBANCE IN AND AROUND WATERCOURSES AND WETLANDS. THE CONTRACTOR SHALL NOT IMPACT AREAS OUTSIDE THE LIMIT OF DISTURBANCE.
3. SEE THE EROSION CONTROL DETAIL SHEET FOR SEEDING FORMULAS AND ROCK CHECK DAM DETAIL.
4. CONTRACTOR TO STABILIZE ANY TEMPORARY CHANNELS AND DITCHES WITH STONE.
5. SILT FENCE LOCATIONS ARE APPROXIMATE ONLY. SILT FENCE TO BE INSTALLED ALONG THE CONTOURS.
6. MULCH SHALL BE APPLIED TO EXPOSED SOIL AT THE END OF EACH WORK DAY. SEED AND MULCH SHALL BE APPLIED TO SOIL WITHIN 48 HOURS OF FINAL DISTURBANCE. SEED AND MULCH SHALL ALSO BE APPLIED TO ANY TOPSOIL STOCKPILES. SEE APPLICATION RATES ON SHEET 3 OF 450.

McFARLAND-JOHNSON, INC

PROJECT NAME: HIGHGATE - FRANKLIN
PROJECT NUMBER: STP RS 0301(1) SA

FILE NAME: ...85c060/design/dc060ero.dgn PLOT DATE: 09-MAY-2005
PROJECT LEADER: DELLASANTA DRAWN BY: SQUAD B
DESIGNED BY: SQUAD B CHECKED BY: SQUAD B
IPARM FILE NAME: dc060er7.1 SHEET 140 OF 450

SNOW FENCE
STA 3+481.2 TO STA 3+498.0 LT
STA 3+595.9 TO STA 3+621.2 LT
STA 3+623.0 TO STA 3+632.0 LT
STA 3+473.5 TO STA 3+479.0 RT
STA 3+482.6 TO STA 3+491.3 RT

PERMANENT SEDIMENT TRAP
STA 3+460 TO STA 3+462 RT
STA 3+460 TO STA 3+462 LT

SILT FENCE
STA 3+480.0 TO STA 3+507.3 LT
STA 3+493.8 TO STA 3+507.3 LT
STA 3+596.0 TO STA 3+621.9 LT
STA 3+623.7 TO STA 3+645.0 LT
STA 3+614.4 TO STA 3+645.0 LT
STA 3+473.1 TO STA 3+480.0 RT
STA 3+478.8 TO STA 3+503.7 RT
STA 3+483.5 TO STA 3+503.7 RT
STA 3+613.7 TO STA 3+627.4 RT
STA 3+613.7 TO STA 3+645.9 RT
STA 3+630.9 TO STA 3+645.9 RT

ROCK CHECK DAM
STA 3+560 RT
STA 3+569 RT
STA 3+580 LT
STA 3+590 LT
STA 3+640 LT
STA 3+652 LT
STA 3+664 LT
STA 3+676 LT
STA 3+688 LT
STA 3+700 LT
STA 3+712 LT
STA 3+724 LT
STA 3+736 LT
STA 3+748 LT
STA 3+760 LT

VT STATE PLANE GRID

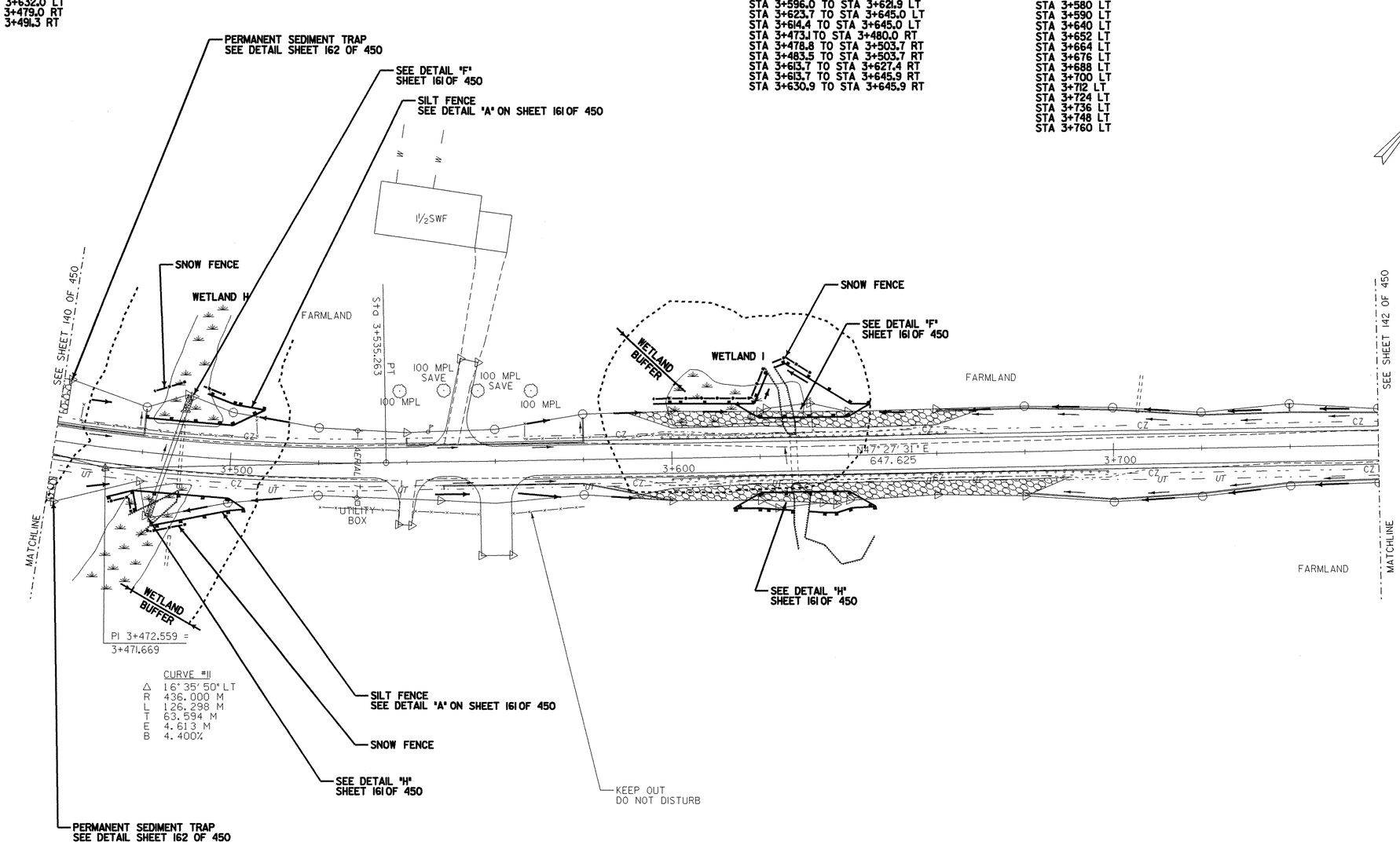

EROSION CONTROL PLAN

0 10 20 30
SCALE IN METERS

LEGEND

- SILT FENCE
- SNOW FENCE
- DIRECTION OF DITCH FLOW
- PROJECT DEMARCATION FENCE
- WETLAND BUFFER
- STABILIZED CONSTRUCTION ENTRANCE
- EROSION MATTING

NOTES:

1. CONSTRUCTION SHALL TAKE PLACE BETWEEN MAY 1 AND OCTOBER 15. CONSTRUCTION IN A WATERCOURSE CHANNEL SHALL TAKE PLACE BETWEEN JUNE 1 AND OCTOBER 1. THE CONTRACTOR SHALL SUBMIT ANY CHANGES TO THIS SCHEDULE TO THE RESIDENT ENGINEER FOR APPROVAL AT OR BEFORE THE PRE-CONSTRUCTION MEETING.
2. THE LIMIT OF DISTURBANCE FOR THIS PROJECT SHALL BE THE LIMIT OF RIGHT-OF-WAY AS SHOWN ON THE EASEMENTS RIGHT-OF-WAY PLANS, UNLESS OTHERWISE SPECIFIED IN THE PLANS. CONSTRUCTION FENCE SHALL BE USED TO DELINEATE THE LIMIT OF DISTURBANCE IN AND AROUND WATERCOURSES AND WETLANDS. THE CONTRACTOR SHALL NOT IMPACT AREAS OUTSIDE THE LIMIT OF DISTURBANCE.
3. SEE THE EROSION CONTROL DETAIL SHEET FOR SEEDING FORMULAS AND ROCK CHECK DAM DETAIL.
4. CONTRACTOR TO STABILIZE ANY TEMPORARY CHANNELS AND DITCHES WITH STONE.
5. SILT FENCE LOCATIONS ARE APPROXIMATE ONLY. SILT FENCE TO BE INSTALLED ALONG THE CONTOURS.
6. MULCH SHALL BE APPLIED TO EXPOSED SOIL AT THE END OF EACH WORK DAY. SEED AND MULCH SHALL BE APPLIED TO SOIL WITHIN 48 HOURS OF FINAL DISTURBANCE. SEED AND MULCH SHALL ALSO BE APPLIED TO ANY TOPSOIL STOCKPILES. SEE APPLICATION RATES ON SHEET 3 OF 450.

McFARLAND-JOHNSON, INC

PROJECT NAME: HIGHGATE - FRANKLIN
PROJECT NUMBER: STP RS 0301(1) SA
FILE NAME: ...85c060/design/dc060ero.dgn PLOT DATE: 09-MAY-2005
PROJECT LEADER: DELLASANTA DRAWN BY: SQUAD B
DESIGNED BY: SQUAD B CHECKED BY: SQUAD B
IPARM FILE NAME: dc060er8.1 SHEET 141 OF 450

SILT FENCE
STA 3+800.0 TO STA 3+826.2 LT
STA 3+834.2 TO STA 4+100.0 LT
STA 3+799.9 TO STA 3+828.4 RT
STA 3+856.3 TO STA 3+930.0 RT
STA 4+030.0 TO STA 4+086.5 RT

ROCK CHECK DAM
STA 3+931.832 RT
STA 4+020.000 RT

EROSION MATTING
STA 3+910.000 TO STA 4+000.000 RT
STA 4+000.000 TO STA 4+050.000 RT

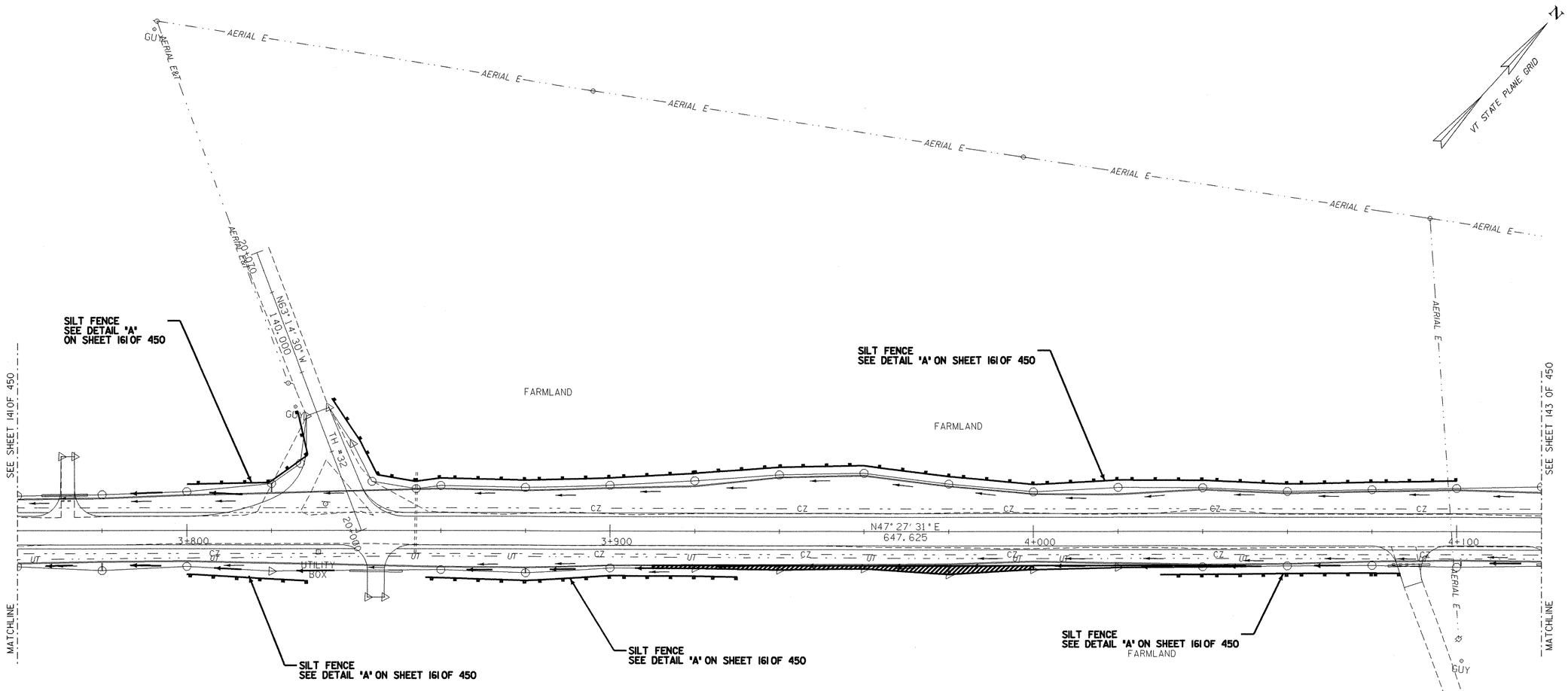

EROSION CONTROL PLAN

0 10 20 30
SCALE IN METERS

LEGEND

- SILT FENCE
- SNOW FENCE
- DIRECTION OF DITCH FLOW
- PROJECT DEMARCATION FENCE (PDF)
- WETLAND BUFFER
- STABILIZED CONSTRUCTION ENTRANCE
- EROSION MATTING

NOTES:

1. CONSTRUCTION SHALL TAKE PLACE BETWEEN MAY 1 AND OCTOBER 15. CONSTRUCTION IN A WATERCOURSE CHANNEL SHALL TAKE PLACE BETWEEN JUNE 1 AND OCTOBER 1. THE CONTRACTOR SHALL SUBMIT ANY CHANGES TO THIS SCHEDULE TO THE RESIDENT ENGINEER FOR APPROVAL AT OR BEFORE THE PRE-CONSTRUCTION MEETING.
2. THE LIMIT OF DISTURBANCE FOR THIS PROJECT SHALL BE THE LIMIT OF RIGHT-OF-WAY AS SHOWN ON THE EASEMENTS RIGHT-OF-WAY PLANS. UNLESS OTHERWISE SPECIFIED IN THE PLANS. CONSTRUCTION FENCE SHALL BE USED TO DELINEATE THE LIMIT OF DISTURBANCE IN AND AROUND WATERCOURSES AND WETLANDS. THE CONTRACTOR SHALL NOT IMPACT AREAS OUTSIDE THE LIMIT OF DISTURBANCE.
3. SEE THE EROSION CONTROL DETAIL SHEET FOR SEEDING FORMULAS AND ROCK CHECK DAM DETAIL.
4. CONTRACTOR TO STABILIZE ANY TEMPORARY CHANNELS AND DITCHES WITH STONE.
5. SILT FENCE LOCATIONS ARE APPROXIMATE ONLY. SILT FENCE TO BE INSTALLED ALONG THE CONTOURS.
6. MULCH SHALL BE APPLIED TO EXPOSED SOIL AT THE END OF EACH WORK DAY. SEED AND MULCH SHALL BE APPLIED TO SOIL WITHIN 48 HOURS OF FINAL DISTURBANCE. SEED AND MULCH SHALL ALSO BE APPLIED TO ANY TOPSOIL STOCKPILES. SEE APPLICATION RATES ON SHEET 3 OF 450.

McFARLAND-JOHNSON, INC

PROJECT NAME: HIGHGATE - FRANKLIN
PROJECT NUMBER: STP RS 0301(1) SA

FILE NAME: ...85c060/design/dc060ero.dgn PLOT DATE: 09-MAY-2005
PROJECT LEADER: DELLASANTA DRAWN BY: SQUAD B
DESIGNED BY: SQUAD B CHECKED BY: SQUAD B
IPARM FILE NAME: dc060er9.1 SHEET 142 OF 450

SILT FENCE
STA 4+471.7 TO STA 4+480.0 RT
STA 4+471.7 TO STA 4+480.0 RT

EROSION MATTING
STA 4+230.000 TO STA 4+288.000 RT
STA 4+350.000 TO STA 4+410.000 RT

ROCK CHECK DAM
STA 4+232 RT
STA 4+242 RT
STA 4+259 RT
STA 4+302 LT
STA 4+318 LT
STA 4+334 LT
STA 4+338 RT
STA 4+350 LT
STA 4+366 LT
STA 4+372 RT
STA 4+380 LT
STA 4+383 RT
STA 4+396 RT
STA 4+398 LT
STA 4+404 RT
STA 4+411 LT
STA 4+411 RT
STA 4+425 LT
STA 4+439 LT
STA 4+440 RT
STA 4+449 RT
STA 4+459 LT
STA 4+466 LT
STA 4+472 LT
STA 4+479 LT

VT STATE PLANE GRID

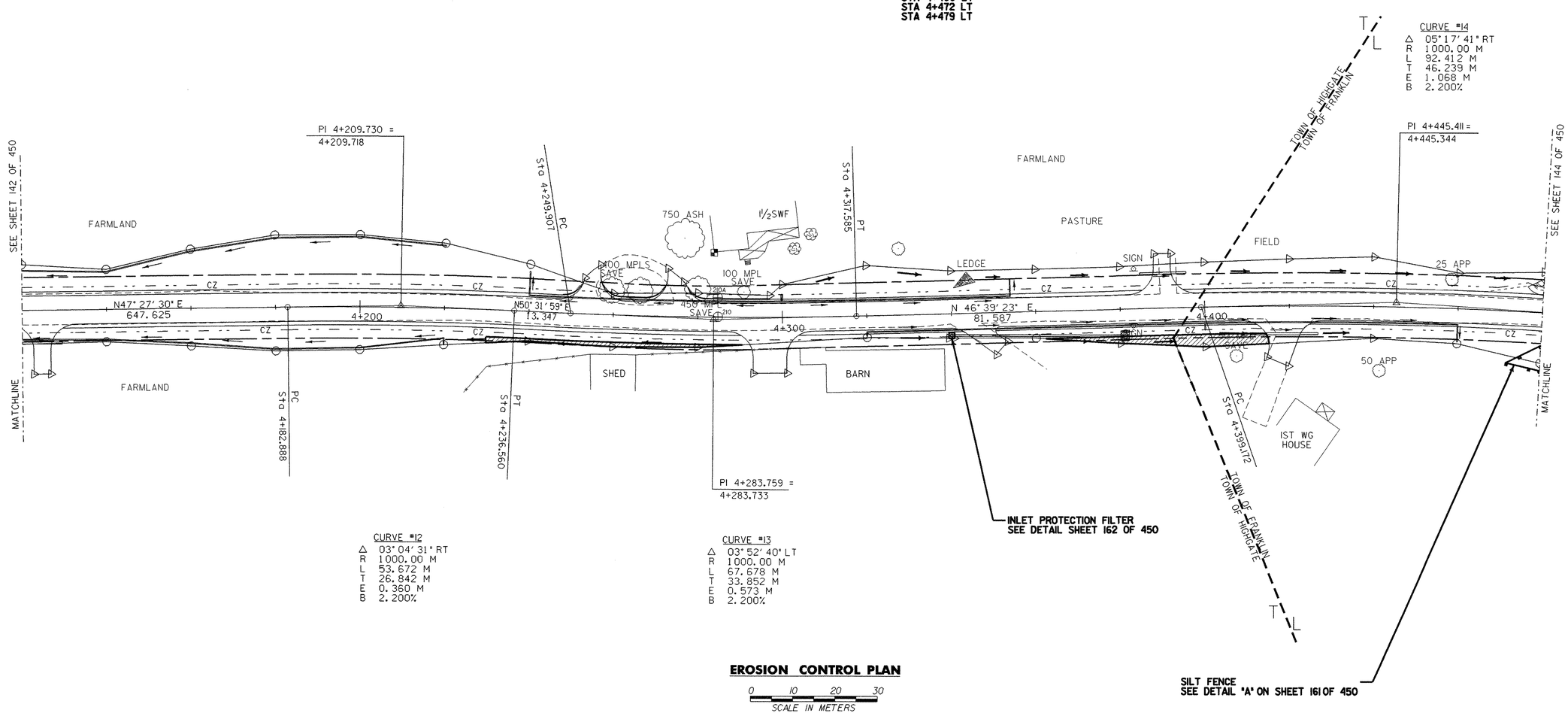

CURVE #12
Δ 03°04'31" RT
R 1000.00 M
L 53.672 M
T 26.842 M
E 0.360 M
B 2.200%

CURVE #13
Δ 03°52'40" LT
R 1000.00 M
L 67.678 M
T 33.852 M
E 0.573 M
B 2.200%

EROSION CONTROL PLAN

0 10 20 30
SCALE IN METERS

LEGEND

- SILT FENCE
- SNOW FENCE
- DIRECTION OF DITCH FLOW
- PROJECT DEMARCATION FENCE
- WETLAND BUFFER
- STABILIZED CONSTRUCTION ENTRANCE
- EROSION MATTING

NOTES:

1. CONSTRUCTION SHALL TAKE PLACE BETWEEN MAY 1 AND OCTOBER 15. CONSTRUCTION IN A WATERCOURSE CHANNEL SHALL TAKE PLACE BETWEEN JUNE 1 AND OCTOBER 1. THE CONTRACTOR SHALL SUBMIT ANY CHANGES TO THIS SCHEDULE TO THE RESIDENT ENGINEER FOR APPROVAL AT OR BEFORE THE PRE-CONSTRUCTION MEETING.
2. THE LIMIT OF DISTURBANCE FOR THIS PROJECT SHALL BE THE LIMIT OF RIGHT-OF-WAY AS SHOWN ON THE EASEMENTS RIGHT-OF-WAY PLANS. UNLESS OTHERWISE SPECIFIED IN THE PLANS. CONSTRUCTION FENCE SHALL BE USED TO DELINEATE THE LIMIT OF DISTURBANCE IN AND AROUND WATERCOURSES AND WETLANDS. THE CONTRACTOR SHALL NOT IMPACT AREAS OUTSIDE THE LIMIT OF DISTURBANCE.
3. SEE THE EROSION CONTROL DETAIL SHEET FOR SEEDING FORMULAS AND ROCK CHECK DAM DETAIL.
4. CONTRACTOR TO STABILIZE ANY TEMPORARY CHANNELS AND DITCHES WITH STONE.
5. SILT FENCE LOCATIONS ARE APPROXIMATE ONLY. SILT FENCE TO BE INSTALLED ALONG THE CONTOURS.
6. MULCH SHALL BE APPLIED TO EXPOSED SOIL AT THE END OF EACH WORK DAY. SEED AND MULCH SHALL BE APPLIED TO SOIL WITHIN 48 HOURS OF FINAL DISTURBANCE. SEED AND MULCH SHALL ALSO BE APPLIED TO ANY TOPSOIL STOCKPILES. SEE APPLICATION RATES ON SHEET 3 OF 450.

McFARLAND-JOHNSON, INC

PROJECT NAME: HIGHGATE - FRANKLIN
PROJECT NUMBER: STP RS 0301(1) SA

FILE NAME: ...85c060/design/dc060ero.dgn PLOT DATE: 09-MAY-2005
PROJECT LEADER: DELLASANTA DRAWN BY: SQUAD B
DESIGNED BY: SQUAD B CHECKED BY: SQUAD B
IPARM FILE NAME: dc060er10.i SHEET 143 OF 450

SILT FENCE
STA 4+480.0 TO STA 4+510.0 LT
STA 4+485.6 TO STA 4+510.0 LT
STA 4+480.0 TO STA 4+507.1 RT
STA 4+480.0 TO STA 4+507.1 RT

ROCK CHECK DAM
STA 4+485 LT
STA 4+491 LT
STA 4+592 RT
STA 4+604 RT
STA 4+616 RT
STA 4+711 LT
STA 4+749 LT
STA 4+760 LT
STA 4+770 LT
STA 4+780 LT
STA 4+790 LT
STA 4+838 RT

EROSION MATTING
STA 4+590.000 TO STA 4+627.000 RT
STA 4+670.000 TO STA 4+750.000 LT
STA 4+790.000 TO STA 4+840.000 RT

N
VT STATE PLANE GRID

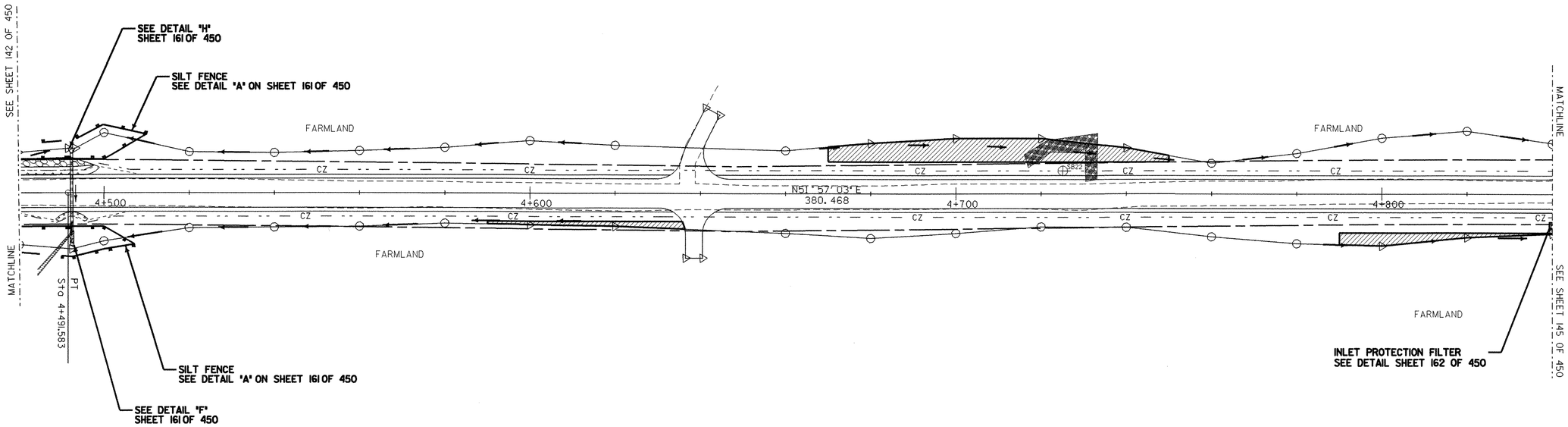

EROSION CONTROL PLAN

0 10 20 30
SCALE IN METERS

LEGEND

- SILT FENCE
- SNOW FENCE
- DIRECTION OF DITCH FLOW
- PROJECT DEMARCATION FENCE (PDF)
- WETLAND BUFFER
- STABILIZED CONSTRUCTION ENTRANCE
- EROSION MATTING

NOTES:

1. CONSTRUCTION SHALL TAKE PLACE BETWEEN MAY 1 AND OCTOBER 15. CONSTRUCTION IN A WATERCOURSE CHANNEL SHALL TAKE PLACE BETWEEN JUNE 1 AND OCTOBER 1. THE CONTRACTOR SHALL SUBMIT ANY CHANGES TO THIS SCHEDULE TO THE RESIDENT ENGINEER FOR APPROVAL AT OR BEFORE THE PRE-CONSTRUCTION MEETING.
2. THE LIMIT OF DISTURBANCE FOR THIS PROJECT SHALL BE THE LIMIT OF RIGHT-OF-WAY AS SHOWN ON THE EASEMENTS RIGHT-OF-WAY PLANS. UNLESS OTHERWISE SPECIFIED IN THE PLANS. CONSTRUCTION FENCE SHALL BE USED TO DELINEATE THE LIMIT OF DISTURBANCE IN AND AROUND WATERCOURSES AND WETLANDS. THE CONTRACTOR SHALL NOT IMPACT AREAS OUTSIDE THE LIMIT OF DISTURBANCE.
3. SEE THE EROSION CONTROL DETAIL SHEET FOR SEEDING FORMULAS AND ROCK CHECK DAM DETAIL.
4. CONTRACTOR TO STABILIZE ANY TEMPORARY CHANNELS AND DITCHES WITH STONE.
5. SILT FENCE LOCATIONS ARE APPROXIMATE ONLY. SILT FENCE TO BE INSTALLED ALONG THE CONTOURS.
6. MULCH SHALL BE APPLIED TO EXPOSED SOIL AT THE END OF EACH WORK DAY. SEED AND MULCH SHALL BE APPLIED TO SOIL WITHIN 48 HOURS OF FINAL DISTURBANCE. SEED AND MULCH SHALL ALSO BE APPLIED TO ANY TOPSOIL STOCKPILES. SEE APPLICATION RATES ON SHEET 3 OF 450.

McFARLAND-JOHNSON, INC

PROJECT NAME: HIGHGATE - FRANKLIN
PROJECT NUMBER: STP RS 0301(1) SA

FILE NAME: ...85c060/design/dc060ero.dgn
PROJECT LEADER: DELLASANTA
DESIGNED BY: SQUAD B
IPARM FILE NAME: dc060er11.i
PLOT DATE: 09-MAY-2005
DRAWN BY: SQUAD B
CHECKED BY: SQUAD B
SHEET 144 OF 450

SILT FENCE
STA 4+881.9 TO STA 4+931.5 LT
STA 4+941.0 TO STA 5+032.4 LT
STA 5+033.5 TO STA 5+070.0 LT
STA 5+013.4 TO STA 5+046.1 LT
STA 5+136.9 TO STA 5+140.0 LT
STA 5+136.9 TO STA 5+140.0 LT
STA 5+017.8 TO STA 5+048.3 RT
STA 5+017.8 TO STA 5+048.3 RT
STA 5+130.0 TO STA 5+140.0 RT
STA 5+135.2 TO STA 5+140.0 RT

ROCK CHECK DAM
STA 4+893 RT
STA 5+072 LT
STA 5+109 RT
STA 5+129 RT
STA 5+129 LT

EROSION MATTING
STA 4+840.000 TO STA 4+881.000 RT
STA 4+886.000 TO STA 4+970.000 RT
STA 5+050.000 TO STA 5+130.000 RT
STA 5+070.000 TO STA 5+130.000 LT

SNOW FENCE
STA 5+029.1 TO STA 5+033.4 LT
STA 5+034.4 TO STA 5+039.5 LT
STA 5+004.7 TO STA 5+017.6 RT
STA 5+018.2 TO STA 5+038.2 RT

PERMANENT SEDIMENT TRAP
STA 4+998.000 TO STA 5+002.000 LT
STA 4+998.000 TO STA 5+002.000 RT

N

VT STATE PLANE GRID

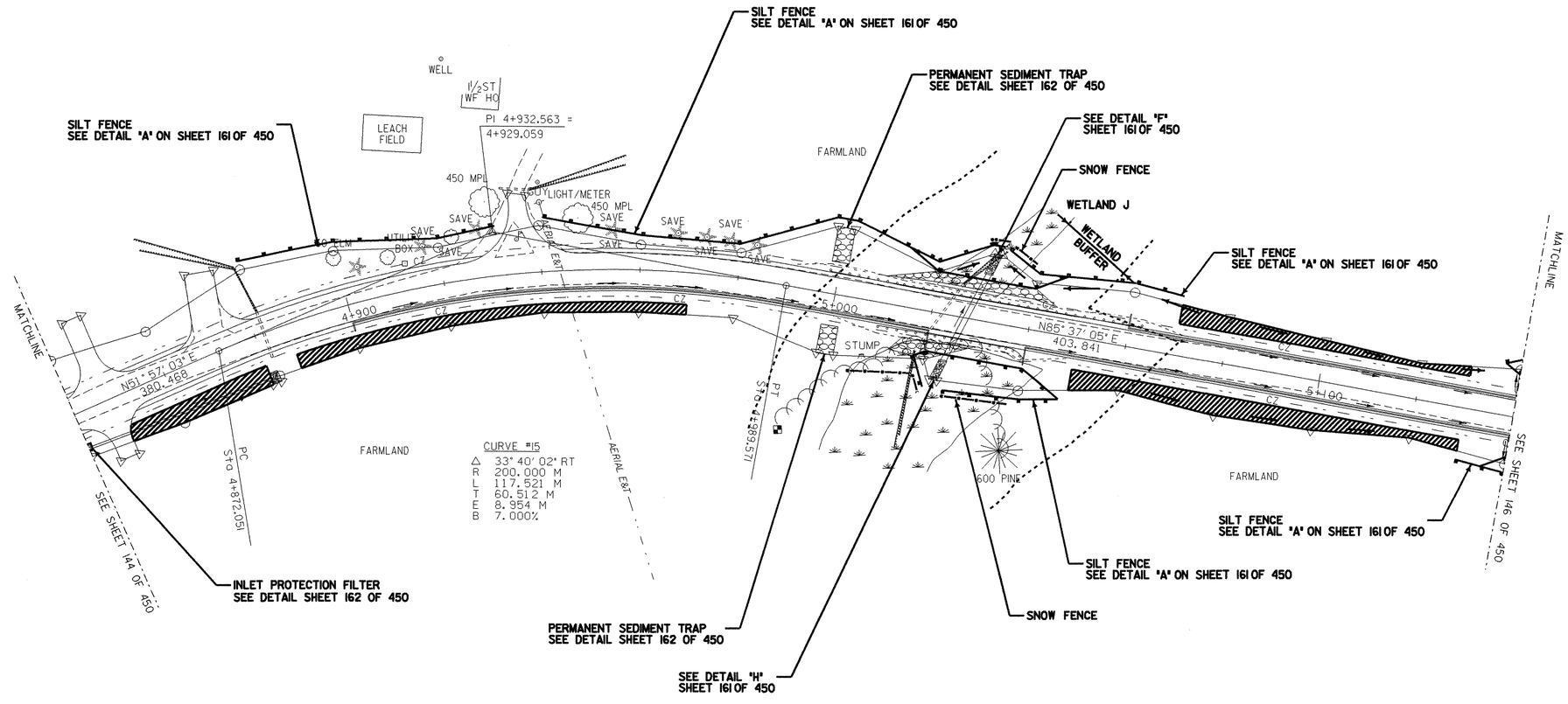

EROSION CONTROL PLAN

0 10 20 30
SCALE IN METERS

LEGEND

- SILT FENCE
- SNOW FENCE
- DIRECTION OF DITCH FLOW
- PROJECT DEMARCATION FENCE
- WETLAND BUFFER
- STABILIZED CONSTRUCTION ENTRANCE
- EROSION MATTING

NOTES:

1. CONSTRUCTION SHALL TAKE PLACE BETWEEN MAY 1 AND OCTOBER 15. CONSTRUCTION IN A WATERCOURSE CHANNEL SHALL TAKE PLACE BETWEEN JUNE 1 AND OCTOBER 1. THE CONTRACTOR SHALL SUBMIT ANY CHANGES TO THIS SCHEDULE TO THE RESIDENT ENGINEER FOR APPROVAL AT OR BEFORE THE PRE-CONSTRUCTION MEETING.
2. THE LIMIT OF DISTURBANCE FOR THIS PROJECT SHALL BE THE LIMIT OF RIGHT-OF-WAY AS SHOWN ON THE EASEMENTS RIGHT-OF-WAY PLANS. UNLESS OTHERWISE SPECIFIED IN THE PLANS. CONSTRUCTION FENCE SHALL BE USED TO DELINEATE THE LIMIT OF DISTURBANCE IN AND AROUND WATERCOURSES AND WETLANDS. THE CONTRACTOR SHALL NOT IMPACT AREAS OUTSIDE THE LIMIT OF DISTURBANCE.
3. SEE THE EROSION CONTROL DETAIL SHEET FOR SEEDING FORMULAS AND ROCK CHECK DAM DETAIL.
4. CONTRACTOR TO STABILIZE ANY TEMPORARY CHANNELS AND DITCHES WITH STONE.
5. SILT FENCE LOCATIONS ARE APPROXIMATE ONLY. SILT FENCE TO BE INSTALLED ALONG THE CONTOURS.
6. MULCH SHALL BE APPLIED TO EXPOSED SOIL AT THE END OF EACH WORK DAY. SEED AND MULCH SHALL BE APPLIED TO SOIL WITHIN 48 HOURS OF FINAL DISTURBANCE. SEED AND MULCH SHALL ALSO BE APPLIED TO ANY TOPSOIL STOCKPILES. SEE APPLICATION RATES ON SHEET 3 OF 450.

McFARLAND-JOHNSON, INC

PROJECT NAME: HIGHGATE - FRANKLIN
PROJECT NUMBER: STP RS 0301(1) SA

FILE NAME: ...85c060/design/dc060ero.dgn PLOT DATE: 09-MAY-2005
PROJECT LEADER: DELLASANTA DRAWN BY: SQUAD B
DESIGNED BY: SQUAD B CHECKED BY: SQUAD B
IPARM FILE NAME: dc060er12.i SHEET 145 OF 450

SILT FENCE
STA 5+136.9 TO STA 5+166.6 LT
STA 5+136.9 TO STA 5+200.1 LT
STA 5+130.0 TO STA 5+167.6 RT
STA 5+130.0 TO STA 5+200.0 RT

ROCK CHECK DAM
STA 5+320 RT
STA 5+327 RT
STA 5+344 RT
STA 5+341 RT
STA 5+348 RT
STA 5+355 RT
STA 5+362 RT
STA 5+369 RT
STA 5+376 RT
STA 5+383 RT
STA 5+390 RT
STA 5+397 RT
STA 5+404 RT
STA 5+411 RT
STA 5+418 RT

N

VT STATE PLANE GRID

Metric

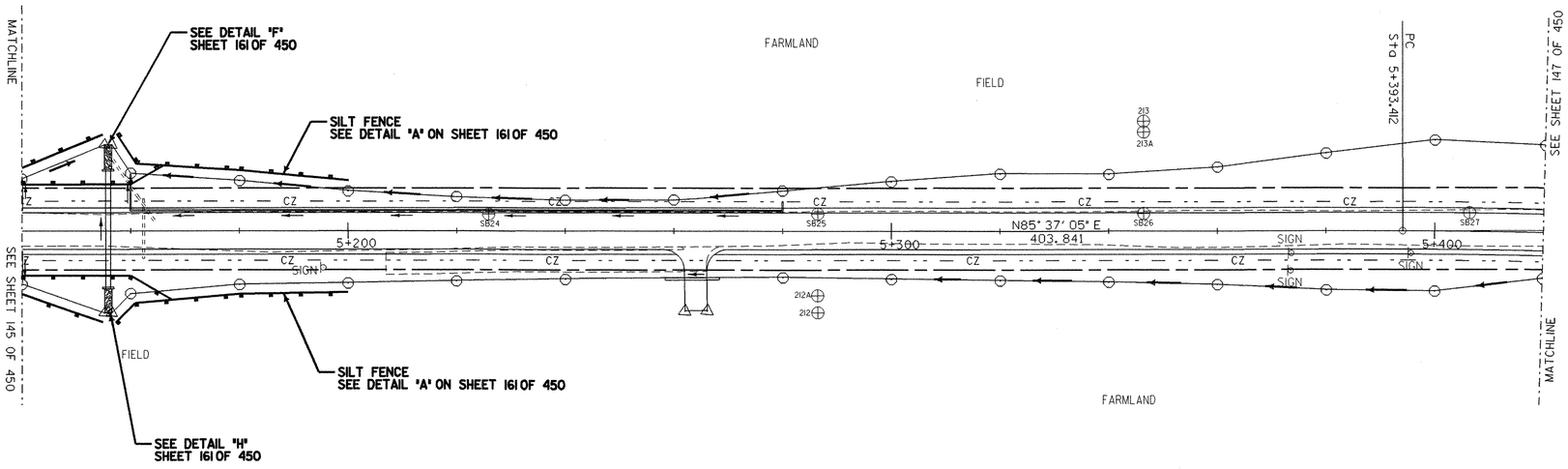

EROSION CONTROL PLAN

0 10 20 30
SCALE IN METERS

LEGEND

- SILT FENCE
- SNOW FENCE
- DIRECTION OF DITCH FLOW
- PDF — PROJECT DEMARCATION FENCE
- WETLAND BUFFER
- STABILIZED CONSTRUCTION ENTRANCE
- EROSION MATTING

NOTES:

1. CONSTRUCTION SHALL TAKE PLACE BETWEEN MAY 1 AND OCTOBER 15. CONSTRUCTION IN A WATERCOURSE CHANNEL SHALL TAKE PLACE BETWEEN JUNE 1 AND OCTOBER 1. THE CONTRACTOR SHALL SUBMIT ANY CHANGES TO THIS SCHEDULE TO THE RESIDENT ENGINEER FOR APPROVAL AT OR BEFORE THE PRE-CONSTRUCTION MEETING.
2. THE LIMIT OF DISTURBANCE FOR THIS PROJECT SHALL BE THE LIMIT OF RIGHT-OF-WAY AS SHOWN ON THE EASEMENTS RIGHT-OF-WAY PLANS. UNLESS OTHERWISE SPECIFIED IN THE PLANS. CONSTRUCTION FENCE SHALL BE USED TO DELINEATE THE LIMIT OF DISTURBANCE IN AND AROUND WATERCOURSES AND WETLANDS. THE CONTRACTOR SHALL NOT IMPACT AREAS OUTSIDE THE LIMIT OF DISTURBANCE.
3. SEE THE EROSION CONTROL DETAIL SHEET FOR SEEDING FORMULAS AND ROCK CHECK DAM DETAIL.
4. CONTRACTOR TO STABILIZE ANY TEMPORARY CHANNELS AND DITCHES WITH STONE.
5. SILT FENCE LOCATIONS ARE APPROXIMATE ONLY. SILT FENCE TO BE INSTALLED ALONG THE CONTOURS.
6. MULCH SHALL BE APPLIED TO EXPOSED SOIL AT THE END OF EACH WORK DAY. SEED AND MULCH SHALL BE APPLIED TO SOIL WITHIN 48 HOURS OF FINAL DISTURBANCE. SEED AND MULCH SHALL ALSO BE APPLIED TO ANY TOPSOIL STOCKPILES. SEE APPLICATION RATES ON SHEET 3 OF 450.

McFARLAND-JOHNSON, INC

PROJECT NAME: HIGHGATE - FRANKLIN
PROJECT NUMBER: STP RS 0301(1) SA

FILE NAME: ...85c060/design/dc060ero.dgn PLOT DATE: 09-MAY-2005
PROJECT LEADER: DELLASANTA DRAWN BY: SQUAD B
DESIGNED BY: SQUAD B CHECKED BY: SQUAD B
IPARM FILE NAME: dc060er13.i SHEET 146 OF 450

SILT FENCE
STA 5+631.6 TO STA 5+720.0 LT
STA 5+620.0 TO STA 5+720.0 RT

ROCK CHECK DAM
STA 5+425 RT
STA 5+432 RT
STA 5+439 RT
STA 5+454 RT
STA 5+461 RT
STA 5+468 RT
STA 5+476 RT
STA 5+541 LT
STA 5+550 LT
STA 5+559 LT
STA 5+566 LT
STA 5+572 LT
STA 5+579 LT
STA 5+732 RT
STA 5+775 RT
STA 21+010 RT
STA 21+030 RT
STA 22+022 LT
STA 22+022 RT
STA 22+034 LT
STA 22+034 RT
STA 22+046 LT
STA 22+046 RT
STA 22+058 LT
STA 22+058 RT

EROSION MATTING
STA 5+510.000 TO STA 5+540.000 LT
STA 5+728.000 TO STA 5+780.000 RT

VAOT Metric

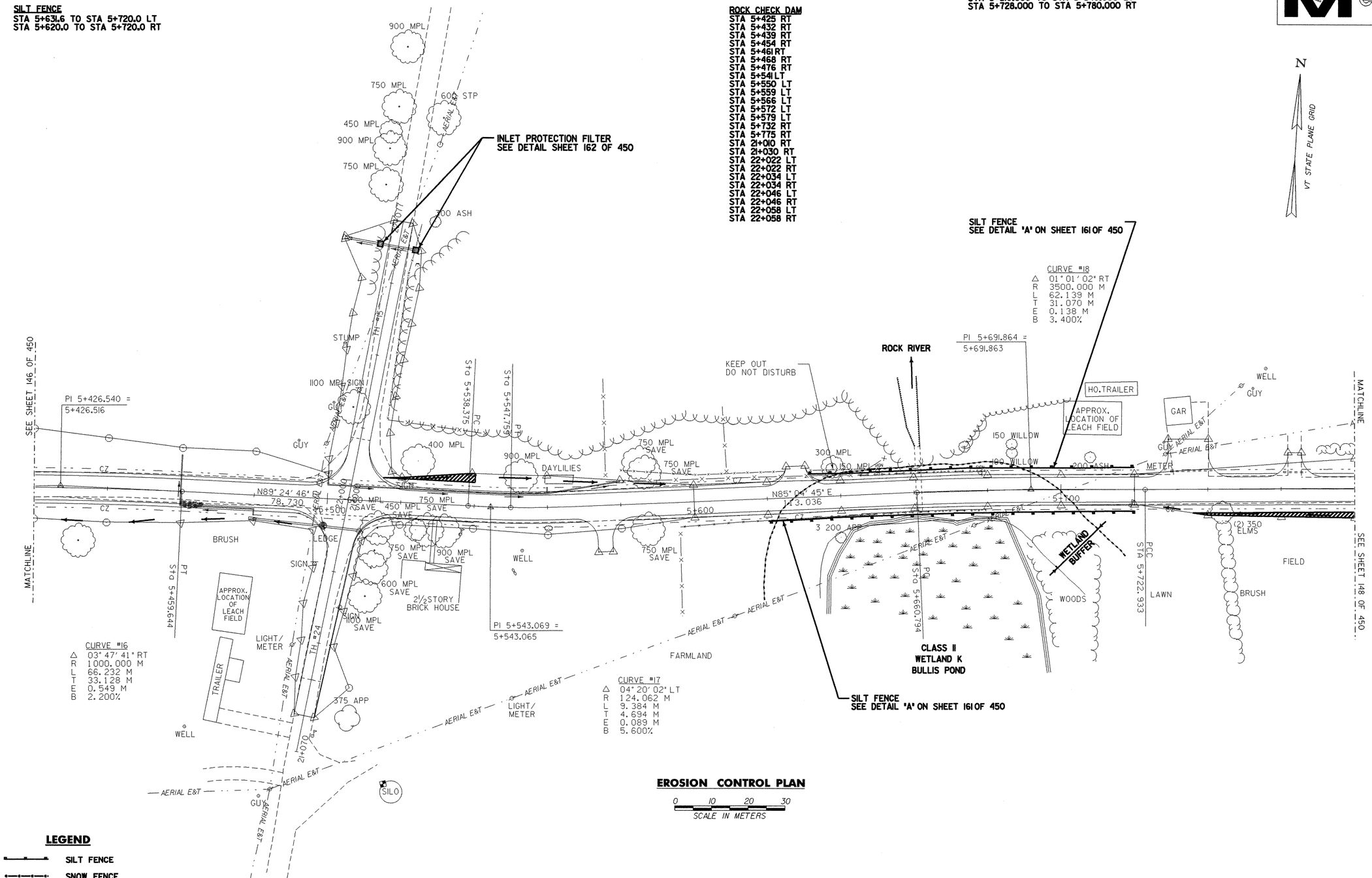

EROSION CONTROL PLAN

0 10 20 30
SCALE IN METERS

LEGEND

- SILT FENCE
- SNOW FENCE
- DIRECTION OF DITCH FLOW
- PROJECT DEMARCATION FENCE
- WETLAND BUFFER
- STABILIZED CONSTRUCTION ENTRANCE
- EROSION MATTING

NOTES:

1. CONSTRUCTION SHALL TAKE PLACE BETWEEN MAY 1 AND OCTOBER 15. CONSTRUCTION IN A WATERCOURSE CHANNEL SHALL TAKE PLACE BETWEEN JUNE 1 AND OCTOBER 1. THE CONTRACTOR SHALL SUBMIT ANY CHANGES TO THIS SCHEDULE TO THE RESIDENT ENGINEER FOR APPROVAL AT OR BEFORE THE PRE-CONSTRUCTION MEETING.
2. THE LIMIT OF DISTURBANCE FOR THIS PROJECT SHALL BE THE LIMIT OF RIGHT-OF-WAY AS SHOWN ON THE EASEMENTS RIGHT-OF-WAY PLANS. UNLESS OTHERWISE SPECIFIED IN THE PLANS. CONSTRUCTION FENCE SHALL BE USED TO DELINEATE THE LIMIT OF DISTURBANCE IN AND AROUND WATERCOURSES AND WETLANDS. THE CONTRACTOR SHALL NOT IMPACT AREAS OUTSIDE THE LIMIT OF DISTURBANCE.
3. SEE THE EROSION CONTROL DETAIL SHEET FOR SEEDING FORMULAS AND ROCK CHECK DAM DETAIL.
4. CONTRACTOR TO STABILIZE ANY TEMPORARY CHANNELS AND DITCHES WITH STONE.
5. SILT FENCE LOCATIONS ARE APPROXIMATE ONLY. SILT FENCE TO BE INSTALLED ALONG THE CONTOURS.
6. MULCH SHALL BE APPLIED TO EXPOSED SOIL AT THE END OF EACH WORK DAY. SEED AND MULCH SHALL BE APPLIED TO SOIL WITHIN 48 HOURS OF FINAL DISTURBANCE. SEED AND MULCH SHALL ALSO BE APPLIED TO ANY TOPSOIL STOCKPILES. SEE APPLICATION RATES ON SHEET 3 OF 450.

McFARLAND-JOHNSON, INC

PROJECT NAME: HIGHGATE - FRANKLIN
PROJECT NUMBER: STP RS 0301(1) SA

FILE NAME: ...85c060/design/dc060ero.dgn PLOT DATE: 09-MAY-2005
PROJECT LEADER: DELLASANTA DRAWN BY: SQUAD B
DESIGNED BY: SQUAD B CHECKED BY: SQUAD B
IPARM FILE NAME: dc060er14.i SHEET 147 OF 450

SNOW FENCE
STA 5+836.6 TO STA 5+879.8 LT
STA 5+818.9 TO STA 5+825.9 RT
STA 5+831.5 TO STA 5+837.7 RT

SILT FENCE
STA 5+830.0 TO STA 5+889.2 LT
STA 5+856.8 TO STA 5+889.2 LT
STA 5+805.0 TO STA 5+827.5 RT
STA 5+815.2 TO STA 5+859.3 RT
STA 5+832.6 TO STA 5+880.1 RT

ROCK CHECK DAM
STA 5+839 LT
STA 5+992 RT
STA 6+029 RT

EROSION MATTING
STA 5+780.000 TO STA 5+842.000 LT
STA 5+780.000 TO STA 5+805.000 RT
STA 5+990.000 TO STA 6+029.000 RT

PERMANENT SEDIMENT TRAP
STA 5+918.000 TO STA 5+922.000 LT

N

VT STATE PLANE GRID

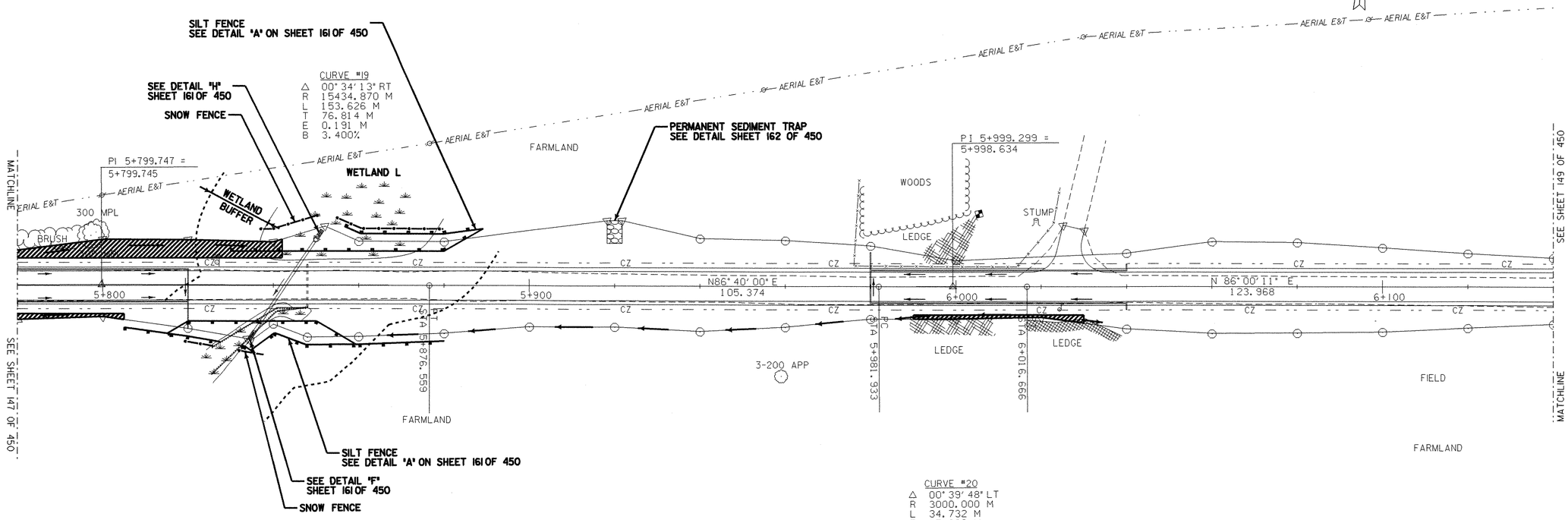

EROSION CONTROL PLAN

0 10 20 30
SCALE IN METERS

LEGEND

- SILT FENCE
- SNOW FENCE
- DIRECTION OF DITCH FLOW
- PDF — PROJECT DEMARCATION FENCE
- WETLAND BUFFER
- STABILIZED CONSTRUCTION ENTRANCE
- EROSION MATTING

NOTES:

1. CONSTRUCTION SHALL TAKE PLACE BETWEEN MAY 1 AND OCTOBER 15. CONSTRUCTION IN A WATERCOURSE CHANNEL SHALL TAKE PLACE BETWEEN JUNE 1 AND OCTOBER 1. THE CONTRACTOR SHALL SUBMIT ANY CHANGES TO THIS SCHEDULE TO THE RESIDENT ENGINEER FOR APPROVAL AT OR BEFORE THE PRE-CONSTRUCTION MEETING.
2. THE LIMIT OF DISTURBANCE FOR THIS PROJECT SHALL BE THE LIMIT OF RIGHT-OF-WAY AS SHOWN ON THE EASEMENTS RIGHT-OF-WAY PLANS. UNLESS OTHERWISE SPECIFIED IN THE PLANS. CONSTRUCTION FENCE SHALL BE USED TO DELINEATE THE LIMIT OF DISTURBANCE IN AND AROUND WATERCOURSES AND WETLANDS. THE CONTRACTOR SHALL NOT IMPACT AREAS OUTSIDE THE LIMIT OF DISTURBANCE.
3. SEE THE EROSION CONTROL DETAIL SHEET FOR SEEDING FORMULAS AND ROCK CHECK DAM DETAIL.
4. CONTRACTOR TO STABILIZE ANY TEMPORARY CHANNELS AND DITCHES WITH STONE.
5. SILT FENCE LOCATIONS ARE APPROXIMATE ONLY. SILT FENCE TO BE INSTALLED ALONG THE CONTOURS.
6. MULCH SHALL BE APPLIED TO EXPOSED SOIL AT THE END OF EACH WORK DAY. SEED AND MULCH SHALL BE APPLIED TO SOIL WITHIN 48 HOURS OF FINAL DISTURBANCE. SEED AND MULCH SHALL ALSO BE APPLIED TO ANY TOPSOIL STOCKPILES. SEE APPLICATION RATES ON SHEET 3 OF 450.

McFARLAND-JOHNSON, INC

PROJECT NAME: HIGHGATE - FRANKLIN
PROJECT NUMBER: STP RS 0301(1) SA

FILE NAME: ...85c060/design/dc060ero.dgn PLOT DATE: 09-MAY-2005
PROJECT LEADER: DELLASANTA DRAWN BY: SQUAD B
DESIGNED BY: SQUAD B CHECKED BY: SQUAD B
IPARM FILE NAME: dc060er15.i SHEET 148 OF 450

SILT FENCE
STA 6+176.9 TO STA 6+204.0 LT
STA 6+176.9 TO STA 6+190.9 LT
STA 6+192.0 TO STA 6+204.0 LT
STA 6+312.6 TO STA 6+338.6 LT
STA 6+312.6 TO STA 6+338.6 LT
STA 6+380.1 TO STA 6+381.3 LT
STA 6+391.3 TO STA 6+419.9 LT
STA 6+171.9 TO STA 6+184.6 RT
STA 6+171.9 TO STA 6+205.6 RT
STA 6+186.3 TO STA 6+205.6 RT
STA 6+311.6 TO STA 6+337.8 RT
STA 6+311.6 TO STA 6+337.8 RT
STA 6+391.4 TO STA 6+440.1 RT

SNOW FENCE
STA 6+181.2 TO STA 6+191.2 LT
STA 6+192.4 TO STA 6+197.5 LT
STA 6+180.5 TO STA 6+184.3 RT
STA 6+186.1 TO STA 6+189.6 RT

ROCK CHECK DAM
STA 6+232 LT

EROSION MATTING
STA 6+230.000 TO STA 6+290.000 LT
STA 6+430.000 TO STA 6+440.000 LT
STA 6+430.000 TO STA 6+440.000 RT

PERMANENT SEDIMENT TRAP
STA 6+158.000 TO STA 6+162.000 LT
STA 6+238.000 TO STA 6+242.000 RT

N

VT STATE PLANE GRID

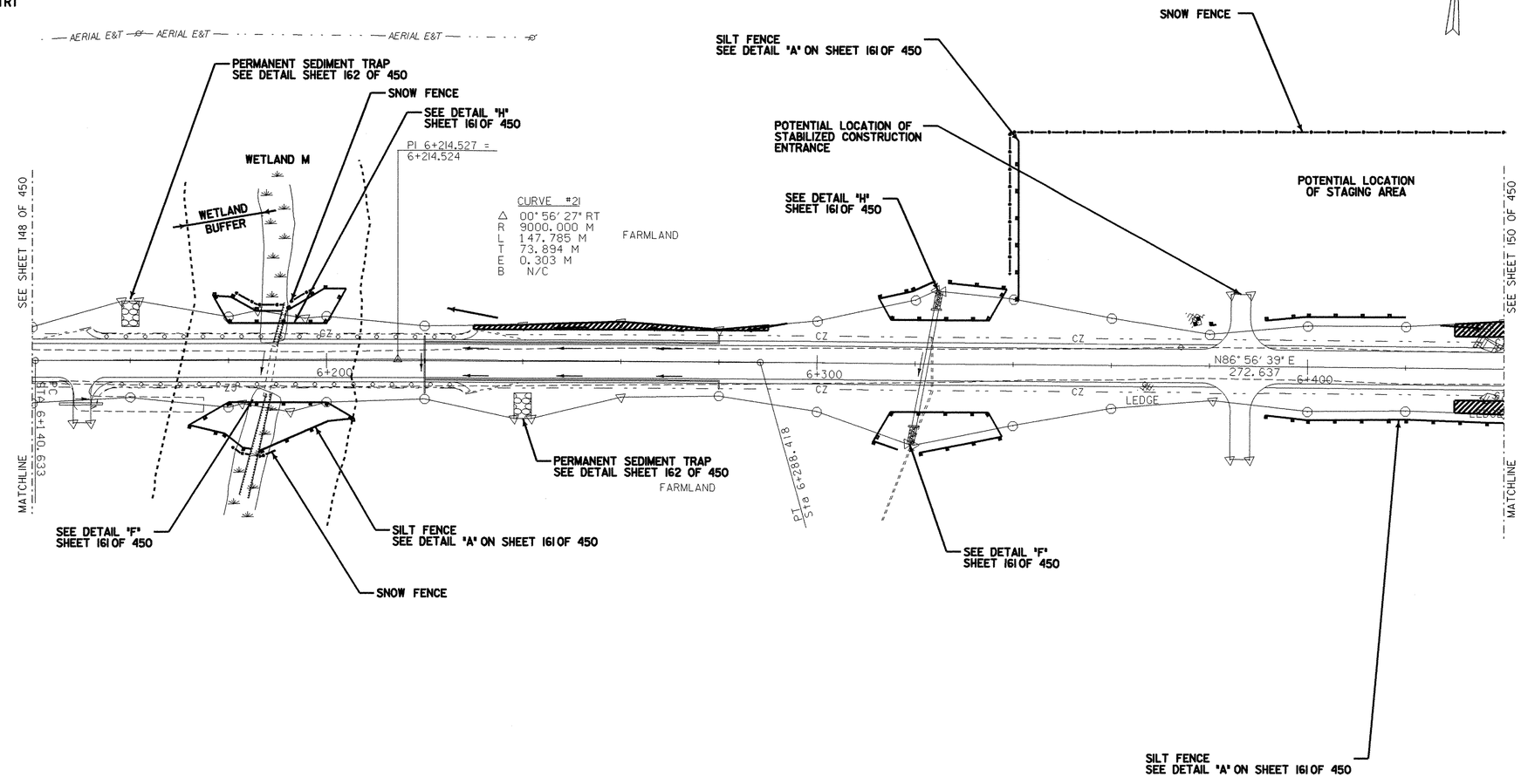

EROSION CONTROL PLAN

0 10 20 30
SCALE IN METERS

LEGEND

- SILT FENCE
- SNOW FENCE
- DIRECTION OF DITCH FLOW
- PDF — PROJECT DEMARCATION FENCE
- WETLAND BUFFER
- STABILIZED CONSTRUCTION ENTRANCE
- EROSION MATTING

NOTES:

1. CONSTRUCTION SHALL TAKE PLACE BETWEEN MAY 1 AND OCTOBER 15. CONSTRUCTION IN A WATERCOURSE CHANNEL SHALL TAKE PLACE BETWEEN JUNE 1 AND OCTOBER 1. THE CONTRACTOR SHALL SUBMIT ANY CHANGES TO THIS SCHEDULE TO THE RESIDENT ENGINEER FOR APPROVAL AT OR BEFORE THE PRE-CONSTRUCTION MEETING.
2. THE LIMIT OF DISTURBANCE FOR THIS PROJECT SHALL BE THE LIMIT OF RIGHT-OF-WAY AS SHOWN ON THE EASEMENTS RIGHT-OF-WAY PLANS. UNLESS OTHERWISE SPECIFIED IN THE PLANS. CONSTRUCTION FENCE SHALL BE USED TO DELINEATE THE LIMIT OF DISTURBANCE IN AND AROUND WATERCOURSES AND WETLANDS. THE CONTRACTOR SHALL NOT IMPACT AREAS OUTSIDE THE LIMIT OF DISTURBANCE.
3. SEE THE EROSION CONTROL DETAIL SHEET FOR SEEDING FORMULAS AND ROCK CHECK DAM DETAIL.
4. CONTRACTOR TO STABILIZE ANY TEMPORARY CHANNELS AND DITCHES WITH STONE.
5. SILT FENCE LOCATIONS ARE APPROXIMATE ONLY. SILT FENCE TO BE INSTALLED ALONG THE CONTOURS.
6. MULCH SHALL BE APPLIED TO EXPOSED SOIL AT THE END OF EACH WORK DAY. SEED AND MULCH SHALL BE APPLIED TO SOIL WITHIN 48 HOURS OF FINAL DISTURBANCE. SEED AND MULCH SHALL ALSO BE APPLIED TO ANY TOPSOIL STOCKPILES. SEE APPLICATION RATES ON SHEET 3 OF 450.

McFARLAND-JOHNSON, INC

PROJECT NAME: HIGHGATE - FRANKLIN
PROJECT NUMBER: STP RS 0301(1) SA

FILE NAME: ...85c060/design/dc060ero.dgn PLOT DATE: 09-MAY-2005
PROJECT LEADER: DELLASANTA DRAWN BY: SQUAD B
DESIGNED BY: SQUAD B CHECKED BY: SQUAD B
IPARM FILE NAME: dc060er16.i SHEET 149 OF 450

Metric

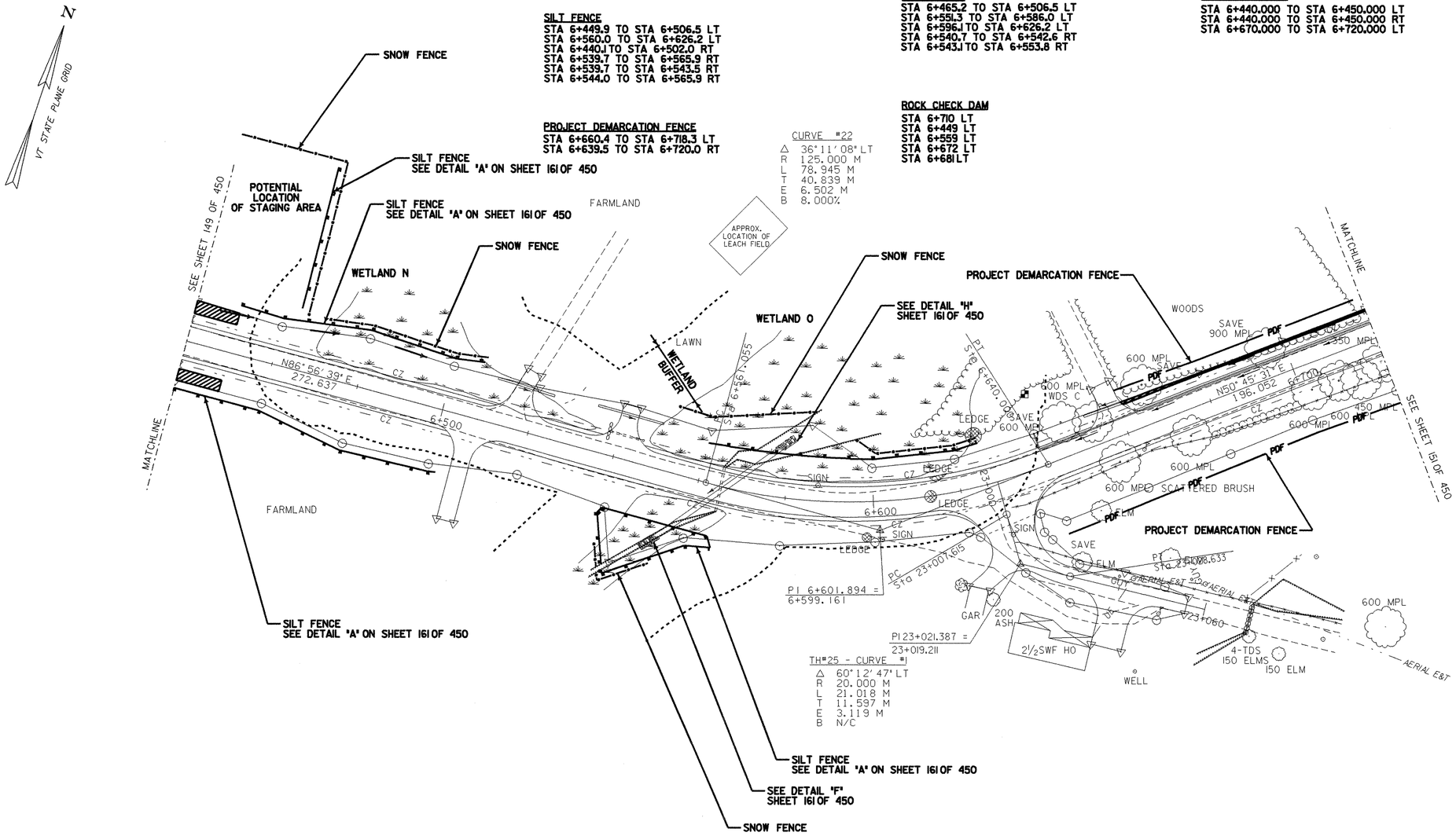

EROSION CONTROL PLAN

0 10 20 30
SCALE IN METERS

LEGEND

- SILT FENCE
- SNOW FENCE
- DIRECTION OF DITCH FLOW
- PDF — PROJECT DEMARCATION FENCE
- WETLAND BUFFER
- STABILIZED CONSTRUCTION ENTRANCE
- EROSION MATTING

NOTES:

1. CONSTRUCTION SHALL TAKE PLACE BETWEEN MAY 1 AND OCTOBER 15. CONSTRUCTION IN A WATERCOURSE CHANNEL SHALL TAKE PLACE BETWEEN JUNE 1 AND OCTOBER 1. THE CONTRACTOR SHALL SUBMIT ANY CHANGES TO THIS SCHEDULE TO THE RESIDENT ENGINEER FOR APPROVAL AT OR BEFORE THE PRE-CONSTRUCTION MEETING.
2. THE LIMIT OF DISTURBANCE FOR THIS PROJECT SHALL BE THE LIMIT OF RIGHT-OF-WAY AS SHOWN ON THE EASEMENTS RIGHT-OF-WAY PLANS. UNLESS OTHERWISE SPECIFIED IN THE PLANS. CONSTRUCTION FENCE SHALL BE USED TO DELINEATE THE LIMIT OF DISTURBANCE IN AND AROUND WATERCOURSES AND WETLANDS. THE CONTRACTOR SHALL NOT IMPACT AREAS OUTSIDE THE LIMIT OF DISTURBANCE.
3. SEE THE EROSION CONTROL DETAIL SHEET FOR SEEDING FORMULAS AND ROCK CHECK DAM DETAIL.
4. CONTRACTOR TO STABILIZE ANY TEMPORARY CHANNELS AND DITCHES WITH STONE.
5. SILT FENCE LOCATIONS ARE APPROXIMATE ONLY. SILT FENCE TO BE INSTALLED ALONG THE CONTOURS.
6. MULCH SHALL BE APPLIED TO EXPOSED SOIL AT THE END OF EACH WORK DAY. SEED AND MULCH SHALL BE APPLIED TO SOIL WITHIN 48 HOURS OF FINAL DISTURBANCE. SEED AND MULCH SHALL ALSO BE APPLIED TO ANY TOPSOIL STOCKPILES. SEE APPLICATION RATES ON SHEET 3 OF 450.

McFARLAND-JOHNSON, INC

PROJECT NAME: HIGHGATE - FRANKLIN	
PROJECT NUMBER: STP RS 0301(1) SA	
FILE NAME: ...85c060/design/dc060ero.dgn	PLOT DATE: 09-MAY-2005
PROJECT LEADER: DELLASANTA	DRAWN BY: SQUAD B
DESIGNED BY: SQUAD B	CHECKED BY: SQUAD B
IPARM FILE NAME: dc060er17.i	SHEET 150 OF 450

SILT FENCE
STA 6+834.6 TO STA 6+839.9 RT
STA 7+020.0 TO STA 7+080.0 RT

PROJECT DEMARCATION FENCE
STA 6+856.8 TO STA 7+027.9 LT
STA 7+031.9 TO STA 7+048.6 LT
STA 7+060.9 TO STA 7+080.0 LT
STA 6+720.0 TO STA 6+782.5 RT
STA 6+834.5 TO STA 7+080.0 RT

ROCK CHECK DAM
STA 6+721 LT
STA 6+732 LT
STA 6+743 LT
STA 6+754 LT
STA 6+760 LT
STA 6+786 LT
STA 6+794 LT
STA 6+802 LT
STA 6+813 LT
STA 6+825 LT
STA 6+836 LT
STA 6+847 LT
STA 6+858 LT
STA 6+871 LT
STA 6+884 LT
STA 6+900 LT
STA 6+923 LT
STA 6+946 LT
STA 7+012 LT

EROSION MATTING
STA 7+057.000 TO STA 7+070.000 LT

VT STATE PLANE GRID

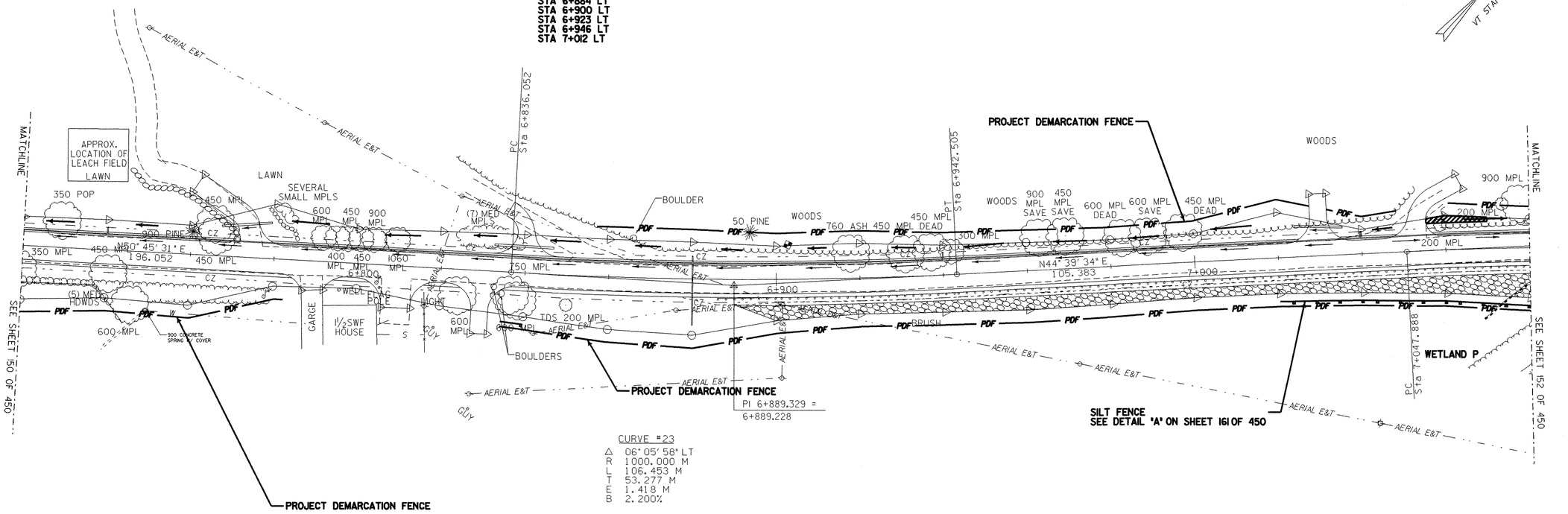

EROSION CONTROL PLAN

0 10 20 30
SCALE IN METERS

LEGEND

- SILT FENCE
- SNOW FENCE
- DIRECTION OF DITCH FLOW
- PDF — PROJECT DEMARCATION FENCE
- WETLAND BUFFER
- STABILIZED CONSTRUCTION ENTRANCE
- EROSION MATTING

NOTES:

1. CONSTRUCTION SHALL TAKE PLACE BETWEEN MAY 1 AND OCTOBER 15. CONSTRUCTION IN A WATERCOURSE CHANNEL SHALL TAKE PLACE BETWEEN JUNE 1 AND OCTOBER 1. THE CONTRACTOR SHALL SUBMIT ANY CHANGES TO THIS SCHEDULE TO THE RESIDENT ENGINEER FOR APPROVAL AT OR BEFORE THE PRE-CONSTRUCTION MEETING.
2. THE LIMIT OF DISTURBANCE FOR THIS PROJECT SHALL BE THE LIMIT OF RIGHT-OF-WAY AS SHOWN ON THE EASEMENTS RIGHT-OF-WAY PLANS. UNLESS OTHERWISE SPECIFIED IN THE PLANS. CONSTRUCTION FENCE SHALL BE USED TO DELINEATE THE LIMIT OF DISTURBANCE IN AND AROUND WATERCOURSES AND WETLANDS. THE CONTRACTOR SHALL NOT IMPACT AREAS OUTSIDE THE LIMIT OF DISTURBANCE.
3. SEE THE EROSION CONTROL DETAIL SHEET FOR SEEDING FORMULAS AND ROCK CHECK DAM DETAIL.
4. CONTRACTOR TO STABILIZE ANY TEMPORARY CHANNELS AND DITCHES WITH STONE.
5. SILT FENCE LOCATIONS ARE APPROXIMATE ONLY. SILT FENCE TO BE INSTALLED ALONG THE CONTOURS.
6. MULCH SHALL BE APPLIED TO EXPOSED SOIL AT THE END OF EACH WORK DAY. SEED AND MULCH SHALL BE APPLIED TO SOIL WITHIN 48 HOURS OF FINAL DISTURBANCE. SEED AND MULCH SHALL ALSO BE APPLIED TO ANY TOPSOIL STOCKPILES. SEE APPLICATION RATES ON SHEET 3 OF 450.

McFARLAND-JOHNSON, INC

PROJECT NAME: HIGHGATE - FRANKLIN
PROJECT NUMBER: STP RS 0301(1)SA

FILE NAME: ...85c060/design/dc060ero.dgn PLOT DATE: 09-MAY-2005
PROJECT LEADER: DELLASANTA DRAWN BY: SQUAD B
DESIGNED BY: SQUAD B CHECKED BY: SQUAD B
IPARM FILE NAME: dc060er18.1 SHEET 151 OF 450

ROCK CHECK DAM
STA 7+201 LT
STA 7+229 LT
STA 7+299 LT
STA 7+372 LT

SILT FENCE
STA 7+080.0 TO STA 7+160.0 LT
STA 7+250.0 TO STA 7+269.8 LT
STA 7+298.0 TO STA 7+320.0 LT
STA 7+080.0 TO STA 7+343.5 RT
STA 7+294.6 TO STA 7+317.6 RT

SNOW FENCE
STA 7+104.4 TO STA 7+343.6 RT

PROJECT DEMARCATION FENCE
STA 7+080.0 TO STA 7+275.4 LT
STA 7+080.0 TO STA 7+104.4 RT

EROSION MATTING
STA 7+170.000 TO STA 7+230.000 LT
STA 7+270.000 TO STA 7+316.000 LT
STA 7+413.000 TO STA 7+420.000 LT

VAOT Metric

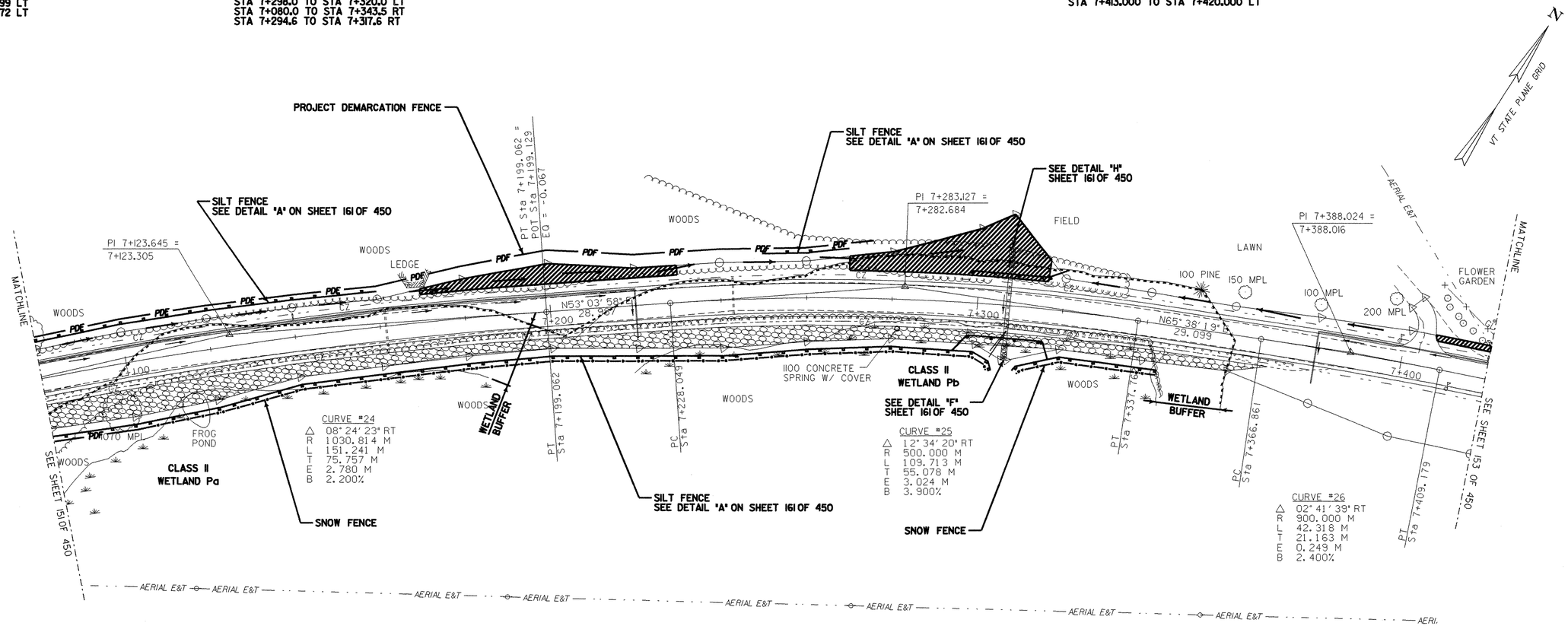

EROSION CONTROL PLAN

0 10 20 30
SCALE IN METERS

LEGEND

- SILT FENCE
- SNOW FENCE
- DIRECTION OF DITCH FLOW
- PDF — PROJECT DEMARCATION FENCE
- WETLAND BUFFER
- STABILIZED CONSTRUCTION ENTRANCE
- EROSION MATTING

NOTES:

1. CONSTRUCTION SHALL TAKE PLACE BETWEEN MAY 1 AND OCTOBER 15. CONSTRUCTION IN A WATERCOURSE CHANNEL SHALL TAKE PLACE BETWEEN JUNE 1 AND OCTOBER 1. THE CONTRACTOR SHALL SUBMIT ANY CHANGES TO THIS SCHEDULE TO THE RESIDENT ENGINEER FOR APPROVAL AT OR BEFORE THE PRE-CONSTRUCTION MEETING.
2. THE LIMIT OF DISTURBANCE FOR THIS PROJECT SHALL BE THE LIMIT OF RIGHT-OF-WAY AS SHOWN ON THE EASEMENTS RIGHT-OF-WAY PLANS. UNLESS OTHERWISE SPECIFIED IN THE PLANS. CONSTRUCTION FENCE SHALL BE USED TO DELINEATE THE LIMIT OF DISTURBANCE IN AND AROUND WATERCOURSES AND WETLANDS. THE CONTRACTOR SHALL NOT IMPACT AREAS OUTSIDE THE LIMIT OF DISTURBANCE.
3. SEE THE EROSION CONTROL DETAIL SHEET FOR SEEDING FORMULAS AND ROCK CHECK DAM DETAIL.
4. CONTRACTOR TO STABILIZE ANY TEMPORARY CHANNELS AND DITCHES WITH STONE.
5. SILT FENCE LOCATIONS ARE APPROXIMATE ONLY. SILT FENCE TO BE INSTALLED ALONG THE CONTOURS.
6. MULCH SHALL BE APPLIED TO EXPOSED SOIL AT THE END OF EACH WORK DAY. SEED AND MULCH SHALL BE APPLIED TO SOIL WITHIN 48 HOURS OF FINAL DISTURBANCE. SEED AND MULCH SHALL ALSO BE APPLIED TO ANY TOPSOIL STOCKPILES. SEE APPLICATION RATES ON SHEET 3 OF 450.

McFARLAND-JOHNSON, INC

PROJECT NAME: HIGHGATE - FRANKLIN
PROJECT NUMBER: STP RS 0301(1) SA

FILE NAME: ...85c060/design/dc060ero.dgn PLOT DATE: 09-MAY-2005
PROJECT LEADER: DELLASANTA DRAWN BY: SQUAD B
DESIGNED BY: SQUAD B CHECKED BY: SQUAD B
IPARM FILE NAME: dc060er19.i SHEET 152 OF 450

SILT FENCE
STA 7+520.7 TO STA 7+555.0 RT
STA 7+520.7 TO STA 7+636.5 RT
STA 7+615.5 TO STA 7+679.1 RT
STA 7+640.8 TO STA 7+720.0 RT

ROCK CHECK DAM
STA 7+552 LT
STA 7+672 LT

SNOW FENCE
STA 7+520.7 TO STA 7+600.2 RT

PERMANENT SEDIMENT TRAP
STA 7+600.2 TO STA 7+720.0 RT

PROJECT DEMARCATION FENCE
STA 7+600.2 TO STA 7+720.0 RT

EROSION MATTING
STA 7+420.000 TO STA 7+609.000 LT
STA 7+657.000 TO STA 7+720.000 LT

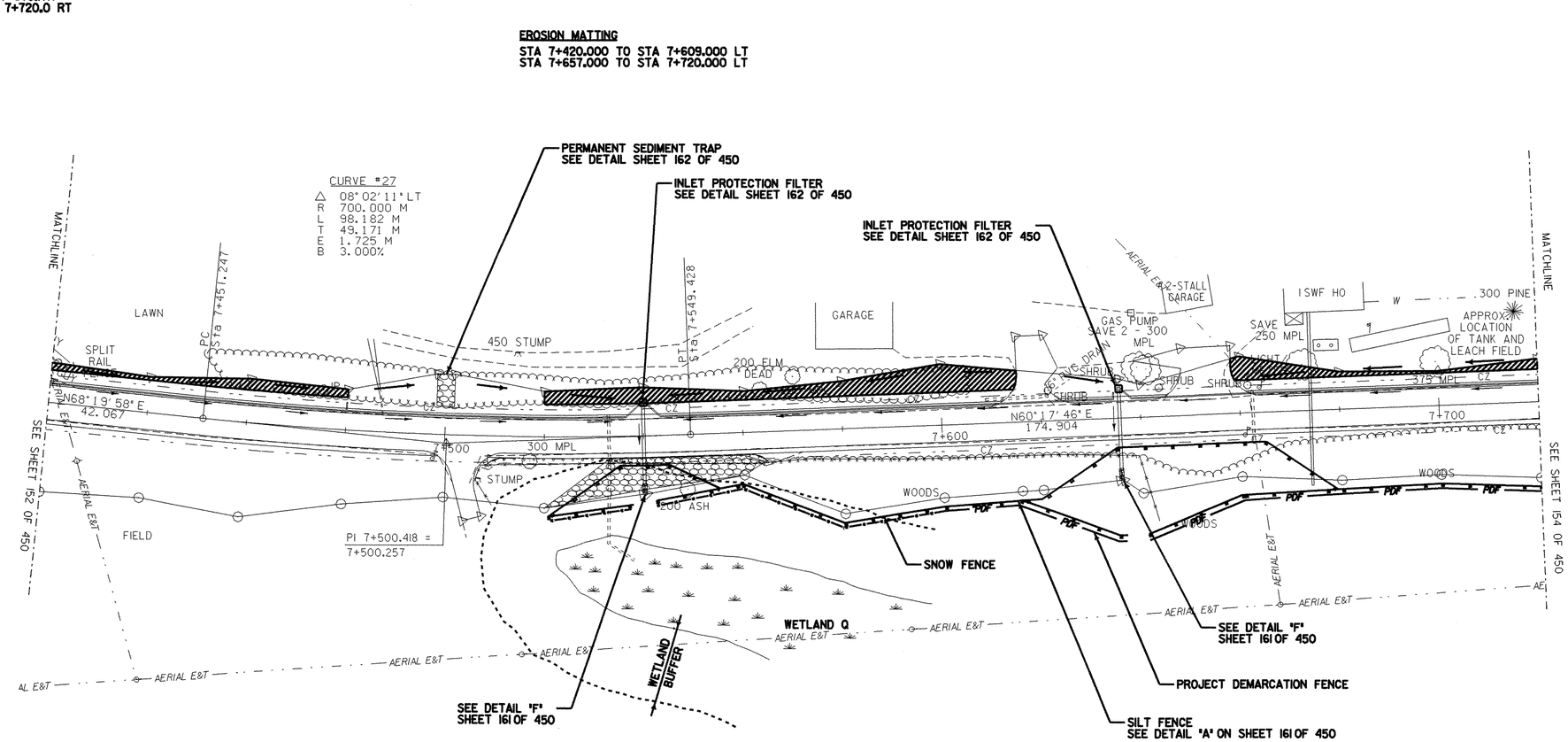

EROSION CONTROL PLAN

0 10 20 30
SCALE IN METERS

LEGEND

- SILT FENCE
- SNOW FENCE
- DIRECTION OF DITCH FLOW
- PDF — PROJECT DEMARCATION FENCE
- WETLAND BUFFER
- STABILIZED CONSTRUCTION ENTRANCE
- EROSION MATTING

NOTES:

1. CONSTRUCTION SHALL TAKE PLACE BETWEEN MAY 1 AND OCTOBER 15. CONSTRUCTION IN A WATERCOURSE CHANNEL SHALL TAKE PLACE BETWEEN JUNE 1 AND OCTOBER 1. THE CONTRACTOR SHALL SUBMIT ANY CHANGES TO THIS SCHEDULE TO THE RESIDENT ENGINEER FOR APPROVAL AT OR BEFORE THE PRE-CONSTRUCTION MEETING.
2. THE LIMIT OF DISTURBANCE FOR THIS PROJECT SHALL BE THE LIMIT OF RIGHT-OF-WAY AS SHOWN ON THE EASEMENTS RIGHT-OF-WAY PLANS. UNLESS OTHERWISE SPECIFIED IN THE PLANS. CONSTRUCTION FENCE SHALL BE USED TO DELINEATE THE LIMIT OF DISTURBANCE IN AND AROUND WATERCOURSES AND WETLANDS. THE CONTRACTOR SHALL NOT IMPACT AREAS OUTSIDE THE LIMIT OF DISTURBANCE.
3. SEE THE EROSION CONTROL DETAIL SHEET FOR SEEDING FORMULAS AND ROCK CHECK DAM DETAIL.
4. CONTRACTOR TO STABILIZE ANY TEMPORARY CHANNELS AND DITCHES WITH STONE.
5. SILT FENCE LOCATIONS ARE APPROXIMATE ONLY. SILT FENCE TO BE INSTALLED ALONG THE CONTOURS.
6. MULCH SHALL BE APPLIED TO EXPOSED SOIL AT THE END OF EACH WORK DAY. SEED AND MULCH SHALL BE APPLIED TO SOIL WITHIN 48 HOURS OF FINAL DISTURBANCE. SEED AND MULCH SHALL ALSO BE APPLIED TO ANY TOPSOIL STOCKPILES. SEE APPLICATION RATES ON SHEET 3 OF 450.

McFARLAND-JOHNSON, INC

PROJECT NAME: HIGHGATE - FRANKLIN
PROJECT NUMBER: STP RS 0301(1) SA

FILE NAME: ...85c060/design/dc060ero.dgn PLOT DATE: 09-MAY-2005
PROJECT LEADER: DELLASANTA DRAWN BY: SQUAD B
DESIGNED BY: SQUAD B CHECKED BY: SQUAD B
IPARM FILE NAME: dc060er20.i SHEET 153 OF 450

SILT FENCE
STA 7+720.0 TO STA 7+747.6 RT
STA 7+751.6 TO STA 8+040.0 RT
STA 7+779.9 TO STA 7+820.1RT
STA 7+899.7 TO STA 7+940.3 RT

ROCK CHECK DAM
STA 7+789 LT
STA 8+040 LT

PROJECT DEMARCATION FENCE
STA 7+833.6 TO STA 8+040.0 LT
STA 7+720.0 TO STA 7+824.6 RT

SNOW FENCE
STA 7+915.7 TO STA 7+927.9 RT
STA 7+957.6 TO STA 7+972.4 RT
STA 8+021.9 TO STA 8+040.0 RT

PERMANENT SEDIMENT TRAP
STA 7+898.000 TO STA 7+902.000 LT

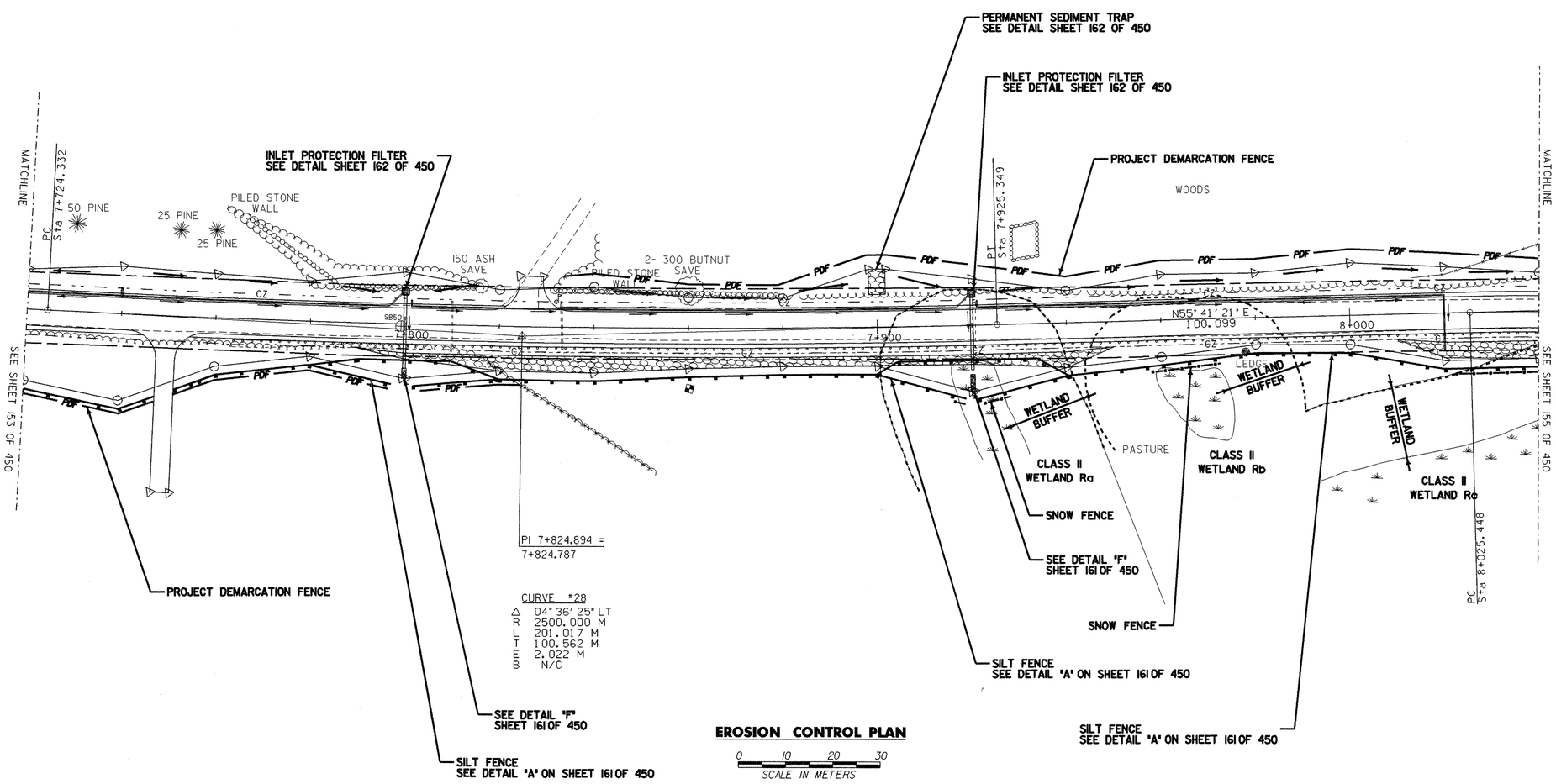

EROSION CONTROL PLAN

0 10 20 30
SCALE IN METERS

LEGEND

- SILT FENCE
- SNOW FENCE
- DIRECTION OF DITCH FLOW
- PDF — PROJECT DEMARCATION FENCE
- WETLAND BUFFER
- STABILIZED CONSTRUCTION ENTRANCE
- EROSION MATTING

NOTES:

1. CONSTRUCTION SHALL TAKE PLACE BETWEEN MAY 1 AND OCTOBER 15. CONSTRUCTION IN A WATERCOURSE CHANNEL SHALL TAKE PLACE BETWEEN JUNE 1 AND OCTOBER 1. THE CONTRACTOR SHALL SUBMIT ANY CHANGES TO THIS SCHEDULE TO THE RESIDENT ENGINEER FOR APPROVAL AT OR BEFORE THE PRE-CONSTRUCTION MEETING.
2. THE LIMIT OF DISTURBANCE FOR THIS PROJECT SHALL BE THE LIMIT OF RIGHT-OF-WAY AS SHOWN ON THE EASEMENTS RIGHT-OF-WAY PLANS. UNLESS OTHERWISE SPECIFIED IN THE PLANS. CONSTRUCTION FENCE SHALL BE USED TO DELINEATE THE LIMIT OF DISTURBANCE IN AND AROUND WATERCOURSES AND WETLANDS. THE CONTRACTOR SHALL NOT IMPACT AREAS OUTSIDE THE LIMIT OF DISTURBANCE.
3. SEE THE EROSION CONTROL DETAIL SHEET FOR SEEDING FORMULAS AND ROCK CHECK DAM DETAIL.
4. CONTRACTOR TO STABILIZE ANY TEMPORARY CHANNELS AND DITCHES WITH STONE.
5. SILT FENCE LOCATIONS ARE APPROXIMATE ONLY. SILT FENCE TO BE INSTALLED ALONG THE CONTOURS.
6. MULCH SHALL BE APPLIED TO EXPOSED SOIL AT THE END OF EACH WORK DAY. SEED AND MULCH SHALL BE APPLIED TO SOIL WITHIN 48 HOURS OF FINAL DISTURBANCE. SEED AND MULCH SHALL ALSO BE APPLIED TO ANY TOPSOIL STOCKPILES. SEE APPLICATION RATES ON SHEET 3 OF 450.

McFARLAND-JOHNSON, INC

PROJECT NAME: HIGHGATE - FRANKLIN
PROJECT NUMBER: STP RS 0301(1) SA

FILE NAME: ...85c060/design/dc060ero.dgn PLOT DATE: 09-MAY-2005
PROJECT LEADER: DELLASANTA DRAWN BY: SQUAD B
DESIGNED BY: SQUAD B CHECKED BY: SQUAD B
IPARM FILE NAME: dc060er21.i SHEET 154 OF 450

SILT FENCE
STA 8+072.6 TO STA 8+108.9 LT
STA 8+074.3 TO STA 8+101.6 LT
STA 8+040.0 TO STA 8+107.2 RT
STA 8+072.2 TO STA 8+105.2 RT

SNOW FENCE
STA 8+040.0 TO STA 8+107.3 RT

PROJECT DEMARCATION FENCE
STA 8+040.0 TO STA 8+051.7 LT
STA 8+126.2 TO STA 8+208.3 LT

ROCK CHECK DAM
STA 8+079 LT
STA 8+163 LT
STA 8+185 LT
STA 8+202 LT
STA 8+221 LT
STA 8+240 LT
STA 8+254 LT
REV STA 8+281 LT
REV STA 8+299 LT
REV STA 8+339 LT

N
VT STATE PLANE GRID

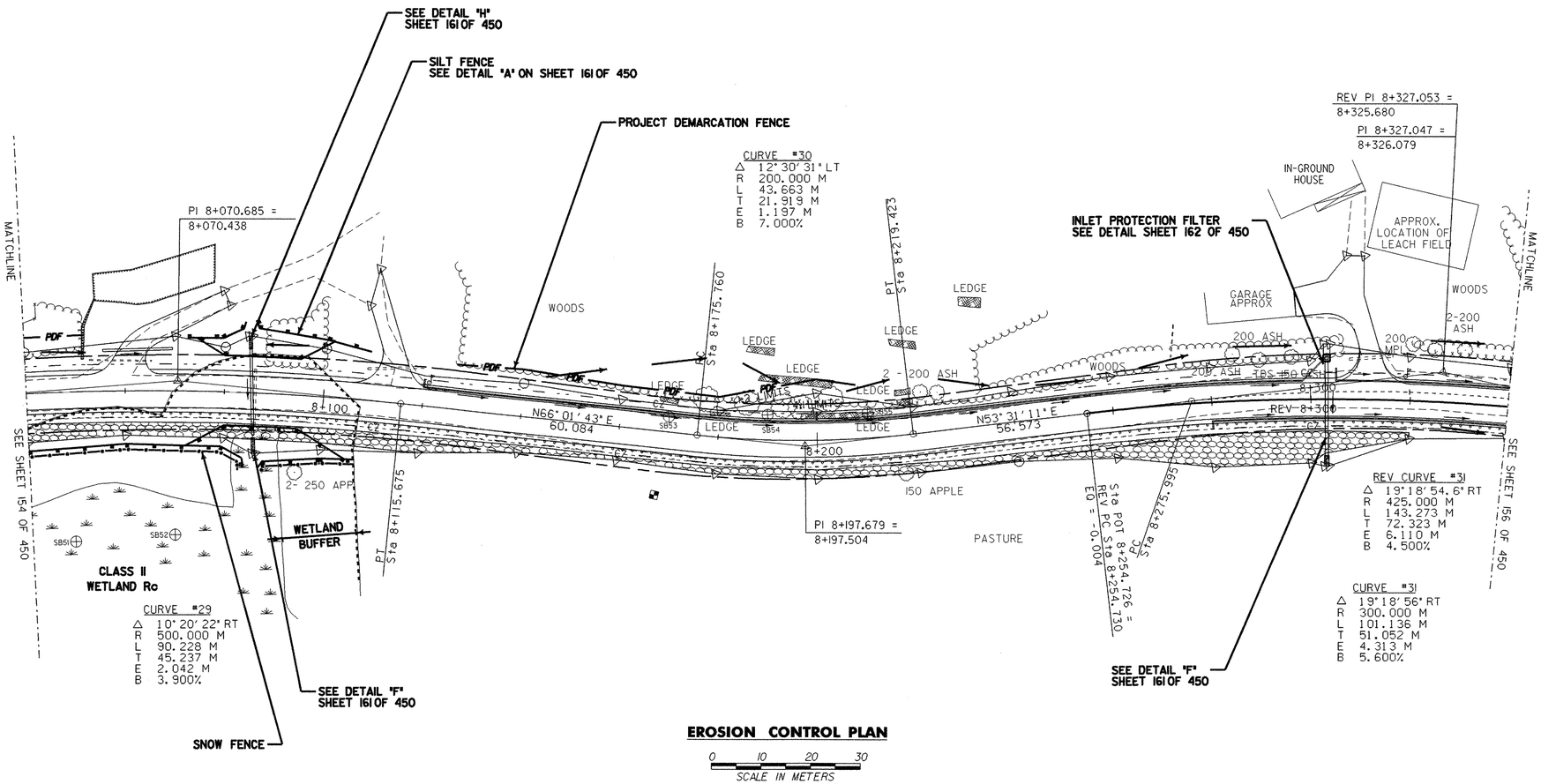

EROSION CONTROL PLAN

0 10 20 30
SCALE IN METERS

LEGEND

- SILT FENCE
- SNOW FENCE
- DIRECTION OF DITCH FLOW
- PDF — PROJECT DEMARCATION FENCE
- WETLAND BUFFER
- STABILIZED CONSTRUCTION ENTRANCE
- EROSION MATTING

NOTES:

1. CONSTRUCTION SHALL TAKE PLACE BETWEEN MAY 1 AND OCTOBER 15. CONSTRUCTION IN A WATERCOURSE CHANNEL SHALL TAKE PLACE BETWEEN JUNE 1 AND OCTOBER 1. THE CONTRACTOR SHALL SUBMIT ANY CHANGES TO THIS SCHEDULE TO THE RESIDENT ENGINEER FOR APPROVAL AT OR BEFORE THE PRE-CONSTRUCTION MEETING.
2. THE LIMIT OF DISTURBANCE FOR THIS PROJECT SHALL BE THE LIMIT OF RIGHT-OF-WAY AS SHOWN ON THE EASEMENTS RIGHT-OF-WAY PLANS. UNLESS OTHERWISE SPECIFIED IN THE PLANS. CONSTRUCTION FENCE SHALL BE USED TO DELINEATE THE LIMIT OF DISTURBANCE IN AND AROUND WATERCOURSES AND WETLANDS. THE CONTRACTOR SHALL NOT IMPACT AREAS OUTSIDE THE LIMIT OF DISTURBANCE.
3. SEE THE EROSION CONTROL DETAIL SHEET FOR SEEDING FORMULAS AND ROCK CHECK DAM DETAIL.
4. CONTRACTOR TO STABILIZE ANY TEMPORARY CHANNELS AND DITCHES WITH STONE.
5. SILT FENCE LOCATIONS ARE APPROXIMATE ONLY. SILT FENCE TO BE INSTALLED ALONG THE CONTOURS.
6. MULCH SHALL BE APPLIED TO EXPOSED SOIL AT THE END OF EACH WORK DAY. SEED AND MULCH SHALL BE APPLIED TO SOIL WITHIN 48 HOURS OF FINAL DISTURBANCE. SEED AND MULCH SHALL ALSO BE APPLIED TO ANY TOPSOIL STOCKPILES. SEE APPLICATION RATES ON SHEET 3 OF 450.

McFARLAND-JOHNSON, INC

PROJECT NAME: HIGHGATE - FRANKLIN
PROJECT NUMBER: STP RS 0301(1) SA
FILE NAME: ...85c060/design/dc060ero.dgn PLOT DATE: 09-MAY-2005
PROJECT LEADER: DELLASANTA DRAWN BY: SQUAD B
DESIGNED BY: SQUAD B CHECKED BY: SQUAD B
IPARM FILE NAME: dc060er22.i SHEET 155 OF 450

SILT FENCE
STA 8+439.0 TO STA 8+471.5 LT
STA 8+439.0 TO STA 8+500.0 LT
STA 8+382.7 TO STA 8+510.0 RT
STA 8+441.3 TO STA 8+473.0 RT

SNOW FENCE
STA 8+439.5 TO STA 8+536.6 LT
STA 8+382.7 TO STA 8+573.9 RT

PERMANENT SEDIMENT TRAP
REV STA 8+378.260 TO REV STA 8+381.740 LT

ROCK CHECK DAM
REV STA 8+349 LT
REV STA 8+355 LT
STA 8+360 RT
STA 8+512 RT
STA 8+525 RT
STA 8+543 RT
STA 8+566 RT
STA 8+512 LT
STA 8+525 LT
STA 8+543 LT
STA 8+566 LT

EROSION MATTING
STA 8+340.000 TO STA 8+346.000 LT
STA 8+510.000 TO STA 8+570.000 RT
STA 8+510.000 TO STA 8+582.000 LT

VAST Metric

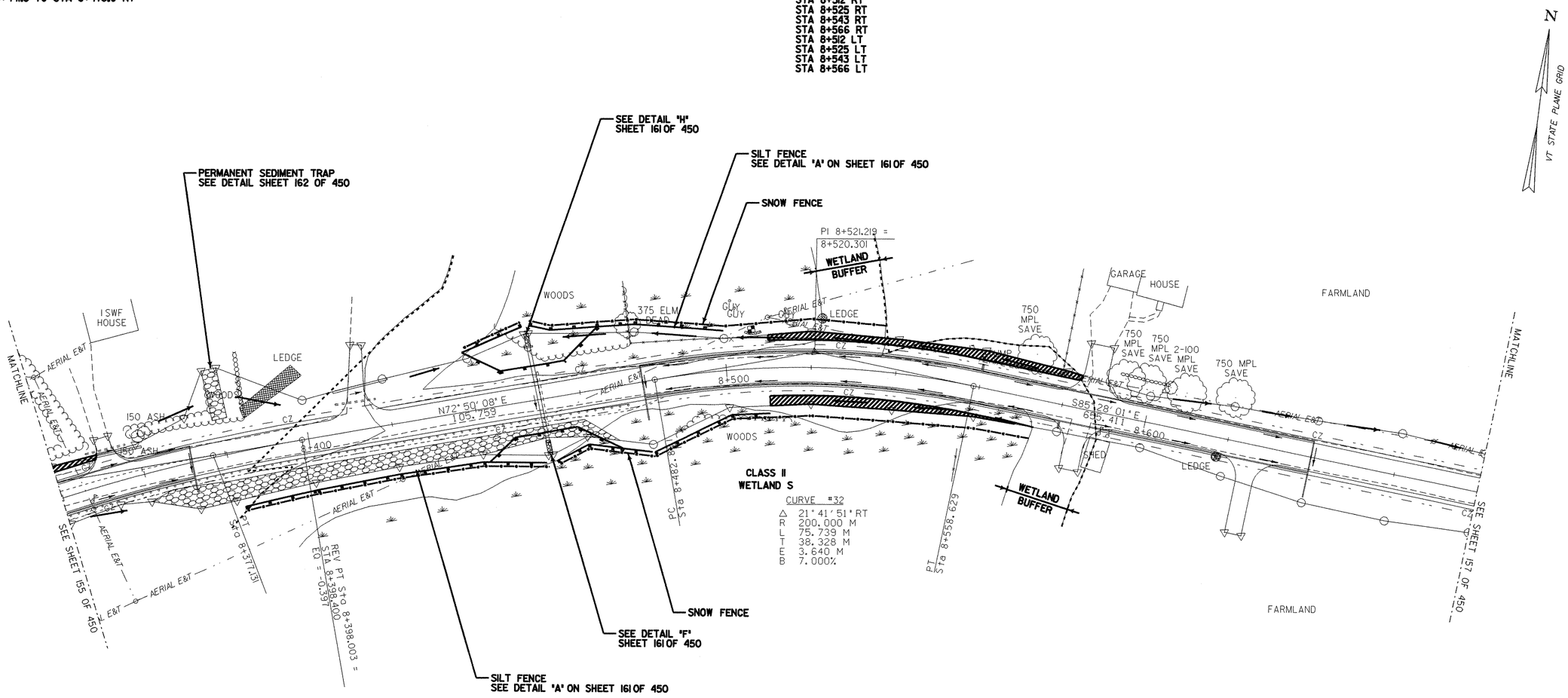

EROSION CONTROL PLAN

0 10 20 30
SCALE IN METERS

LEGEND

- SILT FENCE
- SNOW FENCE
- DIRECTION OF DITCH FLOW
- PROJECT DEMARCATION FENCE (PDF)
- WETLAND BUFFER
- STABILIZED CONSTRUCTION ENTRANCE
- EROSION MATTING

NOTES:

1. CONSTRUCTION SHALL TAKE PLACE BETWEEN MAY 1 AND OCTOBER 15. CONSTRUCTION IN A WATERCOURSE CHANNEL SHALL TAKE PLACE BETWEEN JUNE 1 AND OCTOBER 1. THE CONTRACTOR SHALL SUBMIT ANY CHANGES TO THIS SCHEDULE TO THE RESIDENT ENGINEER FOR APPROVAL AT OR BEFORE THE PRE-CONSTRUCTION MEETING.
2. THE LIMIT OF DISTURBANCE FOR THIS PROJECT SHALL BE THE LIMIT OF RIGHT-OF-WAY AS SHOWN ON THE EASEMENTS RIGHT-OF-WAY PLANS. UNLESS OTHERWISE SPECIFIED IN THE PLANS. CONSTRUCTION FENCE SHALL BE USED TO DELINEATE THE LIMIT OF DISTURBANCE IN AND AROUND WATERCOURSES AND WETLANDS. THE CONTRACTOR SHALL NOT IMPACT AREAS OUTSIDE THE LIMIT OF DISTURBANCE.
3. SEE THE EROSION CONTROL DETAIL SHEET FOR SEEDING FORMULAS AND ROCK CHECK DAM DETAIL.
4. CONTRACTOR TO STABILIZE ANY TEMPORARY CHANNELS AND DITCHES WITH STONE.
5. SILT FENCE LOCATIONS ARE APPROXIMATE ONLY. SILT FENCE TO BE INSTALLED ALONG THE CONTOURS.
6. MULCH SHALL BE APPLIED TO EXPOSED SOIL AT THE END OF EACH WORK DAY. SEED AND MULCH SHALL BE APPLIED TO SOIL WITHIN 48 HOURS OF FINAL DISTURBANCE. SEED AND MULCH SHALL ALSO BE APPLIED TO ANY TOPSOIL STOCKPILES. SEE APPLICATION RATES ON SHEET 3 OF 450.

McFARLAND-JOHNSON, INC

PROJECT NAME: HIGHGATE - FRANKLIN
PROJECT NUMBER: STP RS 0301(1) SA

FILE NAME: ...85c060/design/dc060ero.dgn PLOT DATE: 09-MAY-2005
PROJECT LEADER: DELLASANTA DRAWN BY: SQUAD B
DESIGNED BY: SQUAD B CHECKED BY: SQUAD B
IPARM FILE NAME: dc060er23.i SHEET 156 OF 450

SILT FENCE
STA 8+714.0 TO STA 8+762.9 LT
STA 8+714.0 TO STA 8+723.4 LT
STA 8+724.3 TO STA 8+745.0 LT
STA 8+749.2 TO STA 8+762.9 LT
STA 8+725.1 TO STA 8+762.5 RT
STA 8+725.1 TO STA 8+737.0 RT
STA 8+742.7 TO STA 8+762.5 RT

SNOW FENCE
STA 8+717.4 TO STA 8+723.5 LT
STA 8+724.4 TO STA 8+746.5 LT
STA 8+749.8 TO STA 8+761.0 LT
STA 8+729.9 TO STA 8+735.3 RT
STA 8+741.4 TO STA 8+745.7 RT

PERMANENT SEDIMENT TRAP
STA 8+698.000 TO STA 8+702.000 LT
STA 8+798.000 TO STA 8+802.000 LT
STA 8+818.000 TO STA 8+822.000 RT

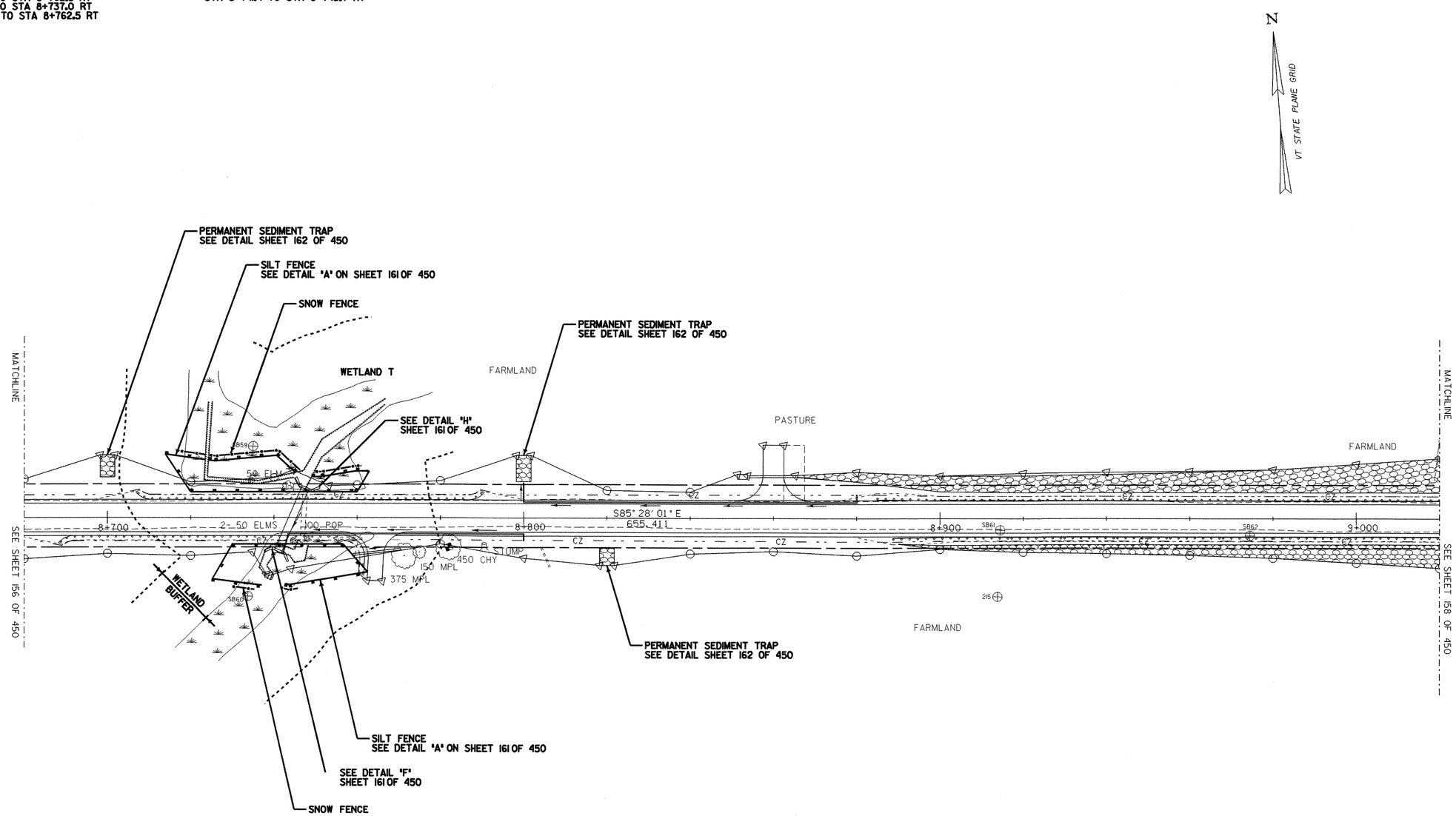

LEGEND

- SILT FENCE
- SNOW FENCE
- DIRECTION OF DITCH FLOW
- PROJECT DEMARCATION FENCE
- WETLAND BUFFER
- STABILIZED CONSTRUCTION ENTRANCE
- EROSION MATTING

NOTES:

1. CONSTRUCTION SHALL TAKE PLACE BETWEEN MAY 1 AND OCTOBER 15. CONSTRUCTION IN A WATERCOURSE CHANNEL SHALL TAKE PLACE BETWEEN JUNE 1 AND OCTOBER 1. THE CONTRACTOR SHALL SUBMIT ANY CHANGES TO THIS SCHEDULE TO THE RESIDENT ENGINEER FOR APPROVAL AT OR BEFORE THE PRE-CONSTRUCTION MEETING.
2. THE LIMIT OF DISTURBANCE FOR THIS PROJECT SHALL BE THE LIMIT OF RIGHT-OF-WAY AS SHOWN ON THE EASEMENTS RIGHT-OF-WAY PLANS. UNLESS OTHERWISE SPECIFIED IN THE PLANS. CONSTRUCTION FENCE SHALL BE USED TO DELINEATE THE LIMIT OF DISTURBANCE IN AND AROUND WATERCOURSES AND WETLANDS. THE CONTRACTOR SHALL NOT IMPACT AREAS OUTSIDE THE LIMIT OF DISTURBANCE.
3. SEE THE EROSION CONTROL DETAIL SHEET FOR SEEDING FORMULAS AND ROCK CHECK DAM DETAIL.
4. CONTRACTOR TO STABILIZE ANY TEMPORARY CHANNELS AND DITCHES WITH STONE.
5. SILT FENCE LOCATIONS ARE APPROXIMATE ONLY. SILT FENCE TO BE INSTALLED ALONG THE CONTOURS.
6. MULCH SHALL BE APPLIED TO EXPOSED SOIL AT THE END OF EACH WORK DAY. SEED ~~AND MULCH SHALL BE~~ APPLIED TO SOIL WITHIN 48 HOURS OF FINAL DISTURBANCE. SEED AND MULCH SHALL ALSO BE APPLIED TO ANY TOPSOIL STOCKPILES. SEE APPLICATION RATES ON SHEET 3 OF 450.

EROSION CONTROL PLAN

McFARLAND-JOHNSON, INC

PROJECT NAME: HIGHGATE - FRANKLIN
PROJECT NUMBER: STP RS 0301(1) SA

FILE NAME: ...85c060/design/dc060ero.dgn | PLOT DATE: 09-MAY-2005
PROJECT LEADER: DELLASANTA | DRAWN BY: SQUAD B
DESIGNED BY: SQUAD B | CHECKED BY: SQUAD B
IPARM FILE NAME: dc060er24.I | SHEET 157 OF 450

Metric

ROCK CHECK DAM
STA 9+222 RT
STA 9+232 RT
STA 9+252 LT
STA 9+273 RT
STA ah 14+657 RT
STA 24+038 LT
STA 24+018 LT
STA 25+010 RT
STA 25+011 LT
STA 25+017 LT
STA 25+018 RT
STA 25+023 LT
STA 25+025 RT

EROSION MATTING
STA 9+215.000 TO STA ah 14+680.000 RT

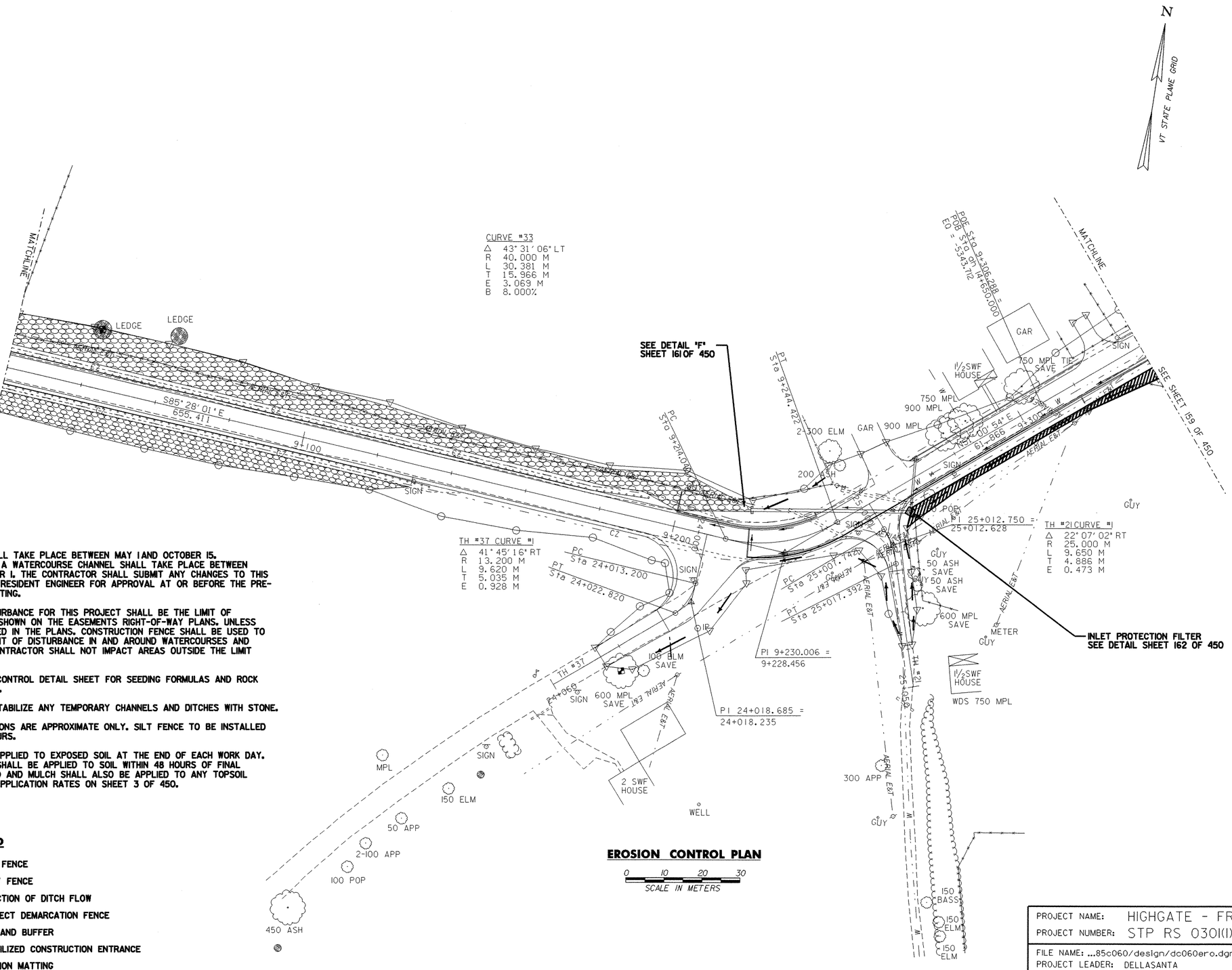

NOTES:

1. CONSTRUCTION SHALL TAKE PLACE BETWEEN MAY 1 AND OCTOBER 15. CONSTRUCTION IN A WATERCOURSE CHANNEL SHALL TAKE PLACE BETWEEN JUNE 1 AND OCTOBER 1. THE CONTRACTOR SHALL SUBMIT ANY CHANGES TO THIS SCHEDULE TO THE RESIDENT ENGINEER FOR APPROVAL AT OR BEFORE THE PRE-CONSTRUCTION MEETING.
2. THE LIMIT OF DISTURBANCE FOR THIS PROJECT SHALL BE THE LIMIT OF RIGHT-OF-WAY AS SHOWN ON THE EASEMENTS RIGHT-OF-WAY PLANS. UNLESS OTHERWISE SPECIFIED IN THE PLANS. CONSTRUCTION FENCE SHALL BE USED TO DELINEATE THE LIMIT OF DISTURBANCE IN AND AROUND WATERCOURSES AND WETLANDS. THE CONTRACTOR SHALL NOT IMPACT AREAS OUTSIDE THE LIMIT OF DISTURBANCE.
3. SEE THE EROSION CONTROL DETAIL SHEET FOR SEEDING FORMULAS AND ROCK CHECK DAM DETAIL.
4. CONTRACTOR TO STABILIZE ANY TEMPORARY CHANNELS AND DITCHES WITH STONE.
5. SILT FENCE LOCATIONS ARE APPROXIMATE ONLY. SILT FENCE TO BE INSTALLED ALONG THE CONTOURS.
6. MULCH SHALL BE APPLIED TO EXPOSED SOIL AT THE END OF EACH WORK DAY. SEED AND MULCH SHALL BE APPLIED TO SOIL WITHIN 48 HOURS OF FINAL DISTURBANCE. SEED AND MULCH SHALL ALSO BE APPLIED TO ANY TOPSOIL STOCKPILES. SEE APPLICATION RATES ON SHEET 3 OF 450.

LEGEND

- SILT FENCE
- SNOW FENCE
- DIRECTION OF DITCH FLOW
- PDF — PROJECT DEMARCATION FENCE
- WETLAND BUFFER
- STABILIZED CONSTRUCTION ENTRANCE
- EROSION MATTING

EROSION CONTROL PLAN

0 10 20 30
SCALE IN METERS

McFARLAND-JOHNSON, INC

PROJECT NAME: HIGHGATE - FRANKLIN
PROJECT NUMBER: STP RS 0301(1) SA

FILE NAME: ...85c060/design/dc060ero.dgn PLOT DATE: 09-MAY-2005
PROJECT LEADER: DELLASANTA DRAWN BY: SQUAD B
DESIGNED BY: SQUAD B CHECKED BY: SQUAD B
IPARM FILE NAME: dc060er25.i SHEET 158 OF 450

ROCK CHECK DAM
STA ah 14+704.778 RT
STA ah 14+733.126 RT
STA ah 14+777.039 RT
STA ah 14+799.349 RT
STA ah 14+840.905 RT
STA ah 14+861.065 RT

EROSION MATTING
STA ah 14+680.000 TO STA ah 14+845.000 RT

Metric

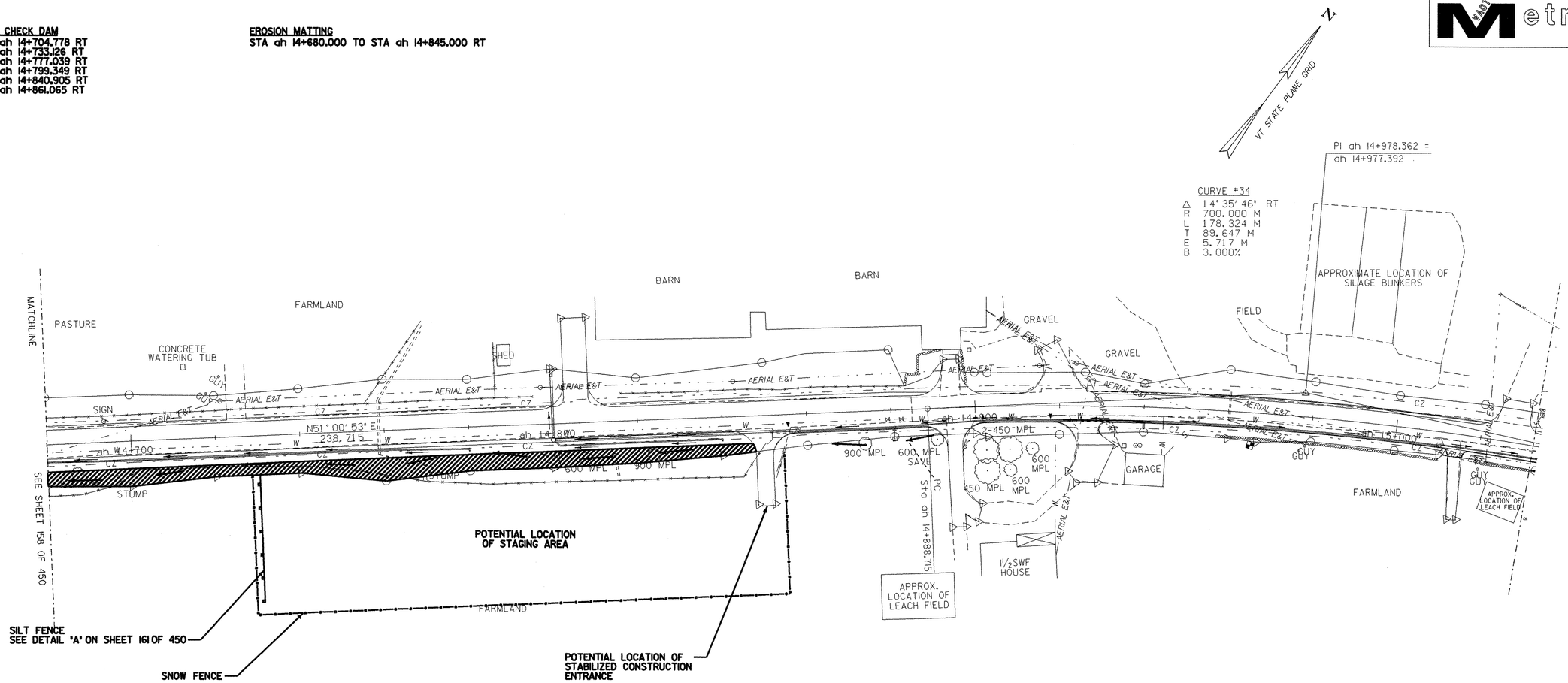

EROSION CONTROL PLAN

0 10 20 30
SCALE IN METERS

LEGEND

- SILT FENCE
- SNOW FENCE
- DIRECTION OF DITCH FLOW
- PROJECT DEMARCATION FENCE
- WETLAND BUFFER
- STABILIZED CONSTRUCTION ENTRANCE
- EROSION MATTING

NOTES:

1. CONSTRUCTION SHALL TAKE PLACE BETWEEN MAY 1 AND OCTOBER 15. CONSTRUCTION IN A WATERCOURSE CHANNEL SHALL TAKE PLACE BETWEEN JUNE 1 AND OCTOBER 1. THE CONTRACTOR SHALL SUBMIT ANY CHANGES TO THIS SCHEDULE TO THE RESIDENT ENGINEER FOR APPROVAL AT OR BEFORE THE PRE-CONSTRUCTION MEETING.
2. THE LIMIT OF DISTURBANCE FOR THIS PROJECT SHALL BE THE LIMIT OF RIGHT-OF-WAY AS SHOWN ON THE EASEMENTS RIGHT-OF-WAY PLANS. UNLESS OTHERWISE SPECIFIED IN THE PLANS. CONSTRUCTION FENCE SHALL BE USED TO DELINEATE THE LIMIT OF DISTURBANCE IN AND AROUND WATERCOURSES AND WETLANDS. THE CONTRACTOR SHALL NOT IMPACT AREAS OUTSIDE THE LIMIT OF DISTURBANCE.
3. SEE THE EROSION CONTROL DETAIL SHEET FOR SEEDING FORMULAS AND ROCK CHECK DAM DETAIL.
4. CONTRACTOR TO STABILIZE ANY TEMPORARY CHANNELS AND DITCHES WITH STONE.
5. SILT FENCE LOCATIONS ARE APPROXIMATE ONLY. SILT FENCE TO BE INSTALLED ALONG THE CONTOURS.
6. MULCH SHALL BE APPLIED TO EXPOSED SOIL AT THE END OF EACH WORK DAY. SEED AND MULCH SHALL BE APPLIED TO SOIL WITHIN 48 HOURS OF FINAL DISTURBANCE. SEED AND MULCH SHALL ALSO BE APPLIED TO ANY TOPSOIL STOCKPILES. SEE APPLICATION RATES ON SHEET 3 OF 450.

McFARLAND-JOHNSON, INC

PROJECT NAME: HIGHGATE - FRANKLIN
PROJECT NUMBER: STP RS 0301(1) SA

FILE NAME: ...85c060/design/dc060ero.dgn PLOT DATE: 09-MAY-2005
PROJECT LEADER: DELLASANTA DRAWN BY: SQUAD B
DESIGNED BY: SQUAD B CHECKED BY: SQUAD B
IPARM FILE NAME: dc060er26.i SHEET 159 OF 450

CHECK DAM GENERAL NOTES

1. GEOTEXTILE SHALL BE INSTALLED UNDER STONE FILL. IT SHALL BE KEYED IN ON THE UP HILL END AND SHALL EXTEND 0.6 m BEYOND THE STONE ON THE DOWN HILL END.
2. CORE MATERIAL FOR THE STONE CHECK DAM SHALL MEET THE GRADATION REQUIREMENTS OF STONE FILL TYPE I (MIN.). STONE SIZE SHOULD BE INCREASED WITH INCREASED SLOPE AND VELOCITY AS DIRECTED BY THE ENGINEER.
3. MEASURES SHALL BE INSPECTED EVERY SEVEN (7) CALENDAR DAYS AND WITHIN 24 HOURS OF A STORM EVENT GREAT ENOUGH TO CAUSE WATER TO LEAVE THE CONSTRUCTION SITE.
4. MEASURES SHALL BE CLEANED AND REPAIRED AS NEEDED. SEDIMENT SHALL BE REMOVED WHEN ACCUMULATION REACHES ONE-HALF OF THE MEASURE HEIGHT. SEDIMENT SHALL BE DISPOSED OF AS UNSUITABLE MATERIAL.
5. AT TIME OF REMOVAL OF THE CHECK DAMS, THE DISTURBED AREA SHALL BE REPAIRED AND STABILIZED.
6. PAYMENT FOR INSTALLATION AND REMOVAL OF CHECK DAMS SHALL BE MADE UNDER APPLICABLE ITEMS INCLUDED IN THE CONTRACT PLANS.
7. PAYMENT FOR MONITORING CHECK DAMS SHALL BE MADE UNDER THE MONITORING EROSION & SEDIMENT CONTROL PLAN ITEM.
8. MAINTENANCE OF EROSION & SEDIMENT CONTROL PLAN ITEM, UNLESS MAINTENANCE IS REQUIRED DUE TO POOR INSTALLATION PRACTICES.
9. SEE "EROSION PREVENTION AND SEDIMENT CONTROL PLANS" FOR LOCATIONS

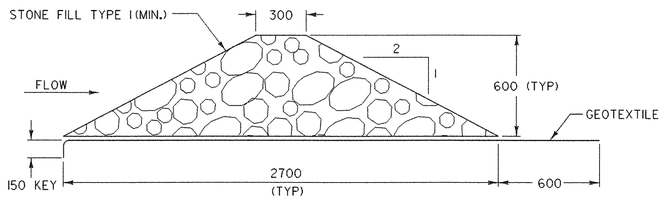

CROSS SECTION

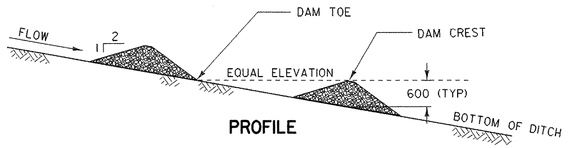

PROFILE

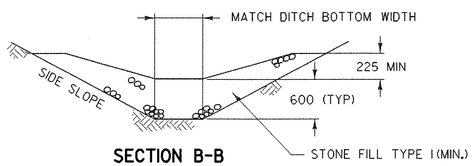

SECTION B-B

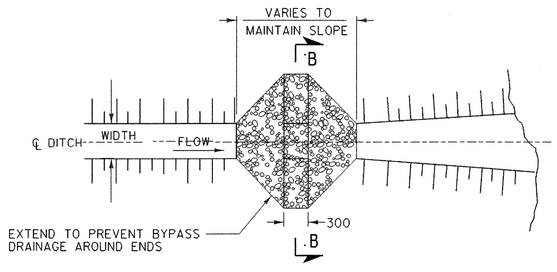

PLAN

DETAIL "B"
TEMPORARY STONE CHECK DAM

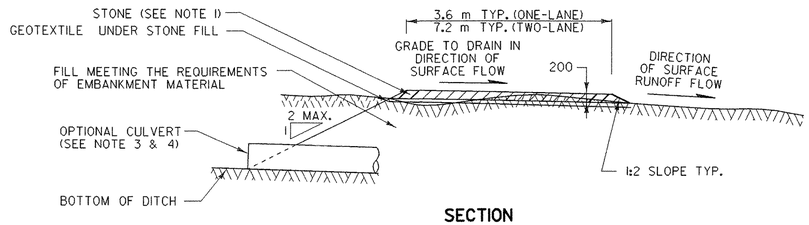

SECTION

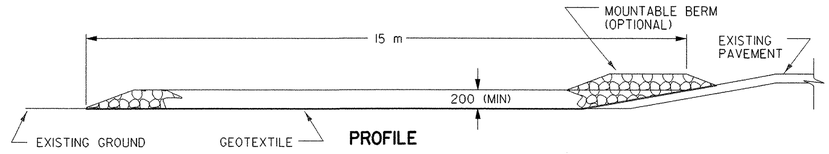

PROFILE

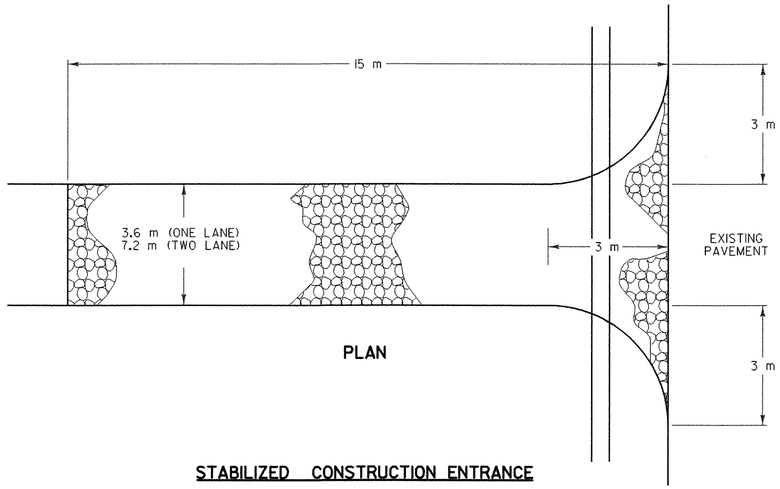

PLAN

STABILIZED CONSTRUCTION ENTRANCE

STABILIZED CONSTRUCTION ENTRANCE NOTES

1. STONE SIZE - USE CLEAN STONE WITH GRADATION BETWEEN 50 mm AND 100 mm.
2. GEOTEXTILE UNDER STONE WILL BE PLACED OVER THE ENTIRE AREA PRIOR TO PLACING OF STONE.
3. SURFACE WATER - ALL SURFACE WATER FLOWING OR DIVERTED TOWARD CONSTRUCTION ENTRANCES SHALL BE PIPED ACROSS THE ENTRANCE AS DIRECTED BY THE ENGINEER. IF PIPING IS IMPRACTICAL, A MOUNTABLE BERM WITH 5:1 SLOPES WILL BE PERMITTED.
4. PROPOSED DRAINAGE PIPES SHALL BE SIZED WITH SUFFICIENT CAPACITY TO CARRY DITCH FLOWS. ALTERNATIVE WAYS OF TRANSPORTING DITCH DRAINAGE ACROSS CONSTRUCTION ENTRANCES MAY BE PROPOSED BY THE CONTRACTOR FOR APPROVAL BY THE ENGINEER.
5. WHEN WASHING OF VEHICLE IS NECESSARY, IT SHALL BE DONE ON AN AREA STABILIZED WITH STONE WHICH DRAINS INTO AN APPROVED SEDIMENT TRAPPING DEVICE.
6. MEASURES SHALL BE INSPECTED EVERY SEVEN (7) CALENDAR DAYS AND WITHIN 24 HOURS OF A STORM EVENT GREAT ENOUGH TO CAUSE WATER TO LEAVE THE CONSTRUCTION SITE.
7. AT THE TIME OF REMOVAL OF THE STABILIZED CONSTRUCTION ENTRANCE THE DISTURBED AREA SHALL BE REPAIRED AND STABILIZED.
8. PAYMENT OF THE STABILIZED CONSTRUCTION ENTRANCE AND APPURTENANCES SHALL BE MADE UNDER STONE FILL, TYPE I (MOD - CONST ENT).
9. PAYMENT FOR MONITORING STABILIZED CONSTRUCTION ENTRANCES SHALL BE MADE UNDER THE MONITORING EROSION & SEDIMENT CONTROL PLAN ITEM.
10. PAYMENT FOR MAINTAINING STABILIZED CONSTRUCTION ENTRANCES SHALL BE MADE UNDER THE FIELD MAINTENANCE OF EROSION & SEDIMENT CONTROL PLAN ITEM, UNLESS MAINTENANCE IS REQUIRED DUE TO POOR INSTALLATION PRACTICES.

ALL DIMENSIONS IN mm UNLESS OTHERWISE NOTED.

McFARLAND-JOHNSON, INC

PROJECT NAME: HIGHGATE - FRANKLIN
PROJECT NUMBER: STP RS 0301(1) SA

FILE NAME: ...85c060/design/dc060dt1.dgn
PROJECT LEADER: DELLASANTA
DESIGNED BY: SQUAD B
IPARM FILE NAME: dc060ecl.i

PLOT DATE: 09-MAY-2005
DRAWN BY: SQUAD B
CHECKED BY: SQUAD B
SHEET 160 OF 450

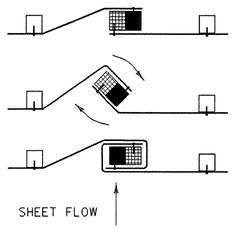

1. PLACE THE END POST OF ONE FENCE INSIDE THE END POST OF THE OTHER FENCE.
2. ROTATE BOTH POSTS AT LEAST 180 DEGREES IN A CLOCKWISE DIRECTION TO CREATE A TIGHT SEAL WITH THE FABRIC MATERIAL
3. DRIVE BOTH POSTS 18 INCHES INTO THE GROUND AND BURY THE FLAP IN THE TRENCH.

SPLICING DETAIL

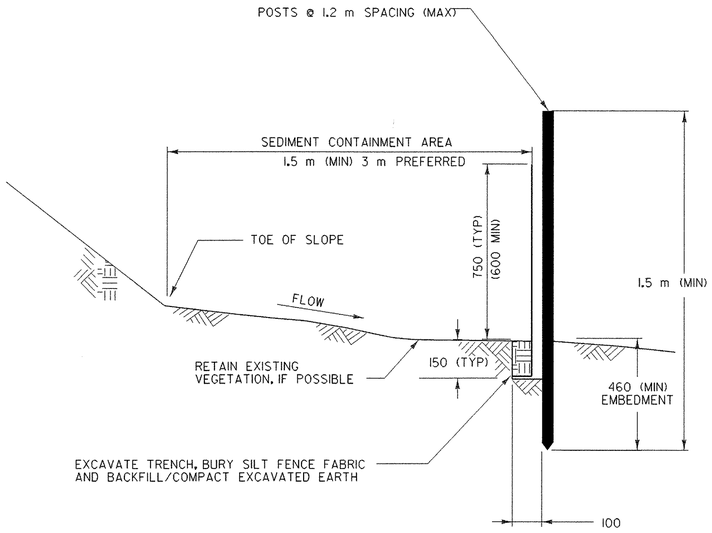

DETAIL 'A'
TEMPORARY SILT FENCE
N.T.S.

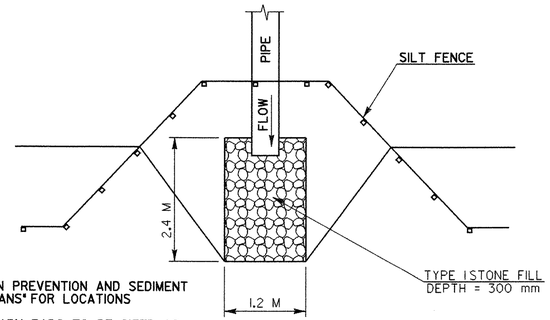

NOTES

1. SEE 'EROSION PREVENTION AND SEDIMENT CONTROL PLANS' FOR LOCATIONS
2. ALL TEMPORARY PADS TO BE SIZED AS DESCRIBED ABOVE
3. GEOTEXTILE UNDER STONE FILL SHALL BE PLACED UNDER THE STONE PADS.

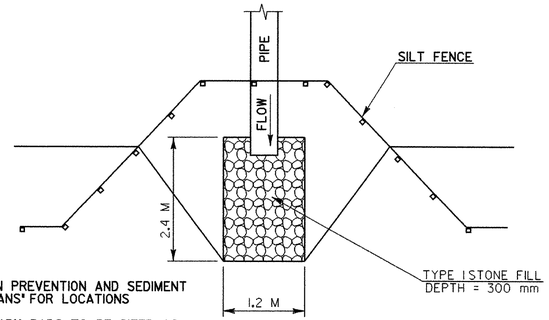

NOTES

1. SEE 'EROSION PREVENTION AND SEDIMENT CONTROL PLANS' FOR LOCATIONS
2. ALL TEMPORARY PADS TO BE SIZED AS DESCRIBED ABOVE
3. GEOTEXTILE UNDER STONE FILL SHALL BE PLACED UNDER THE STONE PADS.

DETAIL 'E'
EXISTING PIPE OUTLET CONTROL
N.T.S.

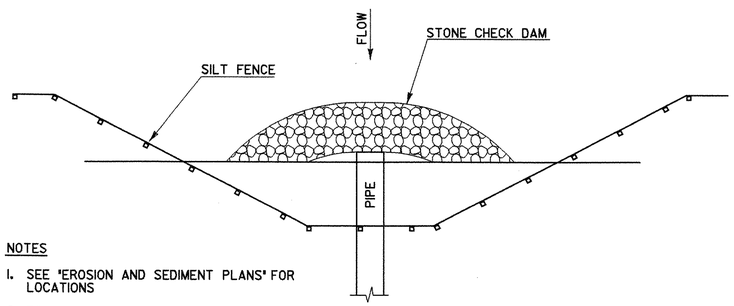

NOTES

1. SEE 'EROSION AND SEDIMENT PLANS' FOR LOCATIONS
2. ROCK CHECK DAM SHALL BE SIZED TO CREATE 600mm PONDING OF STORMWATER BEFORE ENTERING PIPE.
3. GEOTEXTILE UNDER STONE FILL SHALL BE PLACED UNDER THE STONE PADS.

DETAIL 'F'
PROPOSED PIPE OUTLET CONTROL
N.T.S.

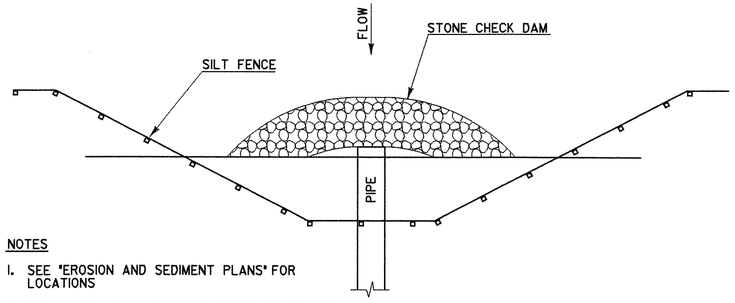

NOTES

1. SEE 'EROSION AND SEDIMENT PLANS' FOR LOCATIONS
2. ROCK CHECK DAM SHALL BE SIZED TO CREATE 600mm PONDING OF STORMWATER BEFORE ENTERING PIPE.
3. GEOTEXTILE UNDER STONE FILL SHALL BE PLACED UNDER THE STONE PADS.

DETAIL 'G'
EXISTING PIPE INLET CONTROL
N.T.S.

DETAIL 'H'
PROPOSED PIPE INLET CONTROL
N.T.S.

SILT FENCE NOTES:

1. SILT FENCE SHALL BE INSTALLED ON A LINE OF EQUAL ELEVATION (CONTOUR). IT MAY BE INSTALLED AT THE BOTTOM OF THE SLOPE.
2. SILT FENCE SHALL NOT BE USED ACROSS CONCENTRATED FLOW.
3. SILT FENCE SHALL GENERALLY BE PLACED 1.2 m BEYOND TOE OF SLOPE TO PROVIDE ADEQUATE AREA FOR SEDIMENT STORAGE AND FACILITATE MAINTENANCE OF SEDIMENT CONTAINMENT AREA.
4. ALL ENDS SHALL BE 'J' HOOKED TO TRAP SEDIMENT.
5. THE BOTTOM EDGE OF SILT FENCE SHALL BE BURIED A MINIMUM OF 150 mm BELOW GROUND, AND KEYED IN 100 mm. THE FENCE SHALL BE INSTALLED WITH THE POSTS ON THE DOWNSTREAM SIDE OF THE FABRIC.
6. MEASURES SHALL BE INSPECTED EVERY SEVEN (7) CALENDAR DAYS AND WITHIN 24 HOURS OF A STORM EVENT GREAT ENOUGH TO CAUSE WATER TO LEAVE THE CONSTRUCTION SITE.
7. MEASURES SHALL BE CLEANED AND REPAIRED AS NEEDED. SEDIMENT SHALL BE REMOVED WHEN ACCUMULATION REACHES ONE-HALF OF THE MEASURE HEIGHT. SEDIMENT SHALL BE DISPOSED OF AS UNSUITABLE MATERIAL.
8. SILT FENCE SHALL BE REMOVED WHEN THE AREA HAS BEEN STABILIZED. AT TIME OF REMOVAL OF THE SILT FENCE, THE DISTURBED AREA SHALL BE REPAIRED AND STABILIZED.
9. PAYMENT FOR INSTALLATION AND REMOVAL OF SILT FENCE SHALL BE MADE UNDER THE GEOTEXTILE FOR SILT FENCE ITEM.
10. PAYMENT FOR MONITORING SILT FENCE SHALL BE MADE UNDER THE MONITORING EROSION & SEDIMENT CONTROL PLAN ITEM.
11. PAYMENT FOR MAINTAINING SILT FENCE SHALL BE MADE UNDER THE FIELD MAINTENANCE OF EROSION & SEDIMENT CONTROL PLAN ITEM, UNLESS MAINTENANCE IS REQUIRED DUE TO POOR INSTALLATION PRACTICES.
12. SEE 'EROSION PREVENTION AND SEDIMENT CONTROL PLANS' FOR LOCATIONS

ALL DIMENSIONS IN mm UNLESS OTHERWISE NOTED.

McFARLAND-JOHNSON, INC

PROJECT NAME: HIGHGATE - FRANKLIN
PROJECT NUMBER: STP RS 0301(1) SA

FILE NAME: ...85c060/design/dc060dtl.dgn
PROJECT LEADER: DELLASANTA
DESIGNED BY: SQUAD B
IPARM FILE NAME: dc060ec2.i

PLOT DATE: 09-MAY-2005
DRAWN BY: SQUAD B
CHECKED BY: SQUAD B
SHEET 161 OF 450

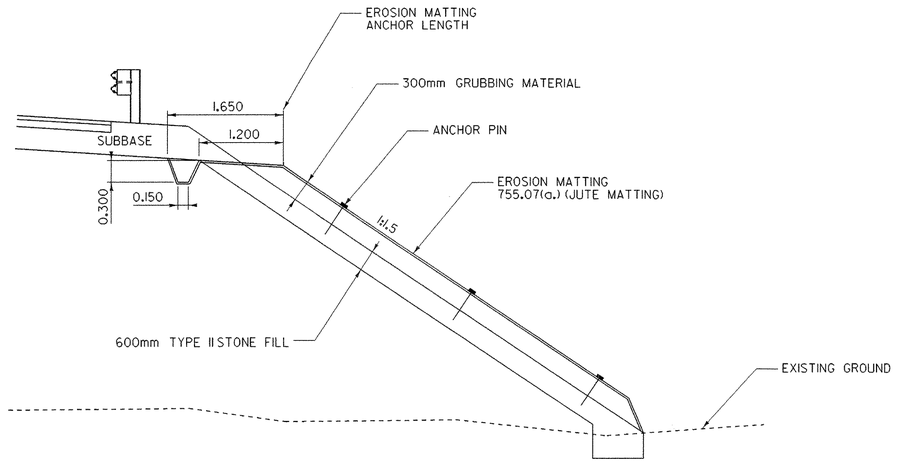

TYPICAL PLACEMENT OF EROSION MATTING (JUTE)
ABOVE THE GRUBBING MATERIAL
NOT TO SCALE

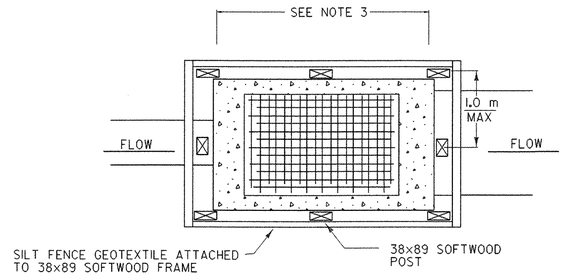

PLAN

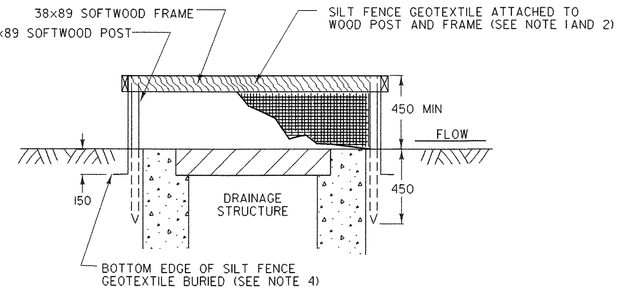

SECTION

INLET PROTECTION FILTER

INLET PROTECTION NOTES:

1. THE TOP OF THE INLET PROTECTION SHALL BE SET AT THE MAXIMUM DESIRED WATER LEVEL, BASED ON FIELD LOCATION AND CONDITIONS.
2. SILT FENCE GEOTEXTILE SHALL BE A SINGLE CONTINUOUS PIECE TO ELIMINATE JOINTS.
3. SPACE SILT FENCE POSTS EVENLY AROUND INLET WITH A MAXIMUM SPACING OF 1.0 m. DRIVE POSTS A MINIMUM OF 450 mm INTO GROUND. WIRE MESH MAY BE REQUIRED BEHIND GEOTEXTILE TO PROVIDE SUPPORT.
4. SILT FENCE GEOTEXTILE SHALL BE EMBEDDED A MINIMUM OF 150 mm AND BACKFILLED. GEOTEXTILE SHALL BE SECURELY FASTENED TO POSTS AND FRAME.
5. MEASURES SHALL BE INSPECTED EVERY SEVEN (7) CALENDAR DAYS AND WITHIN 24 HOURS OF A STORM EVENT GREAT ENOUGH TO CAUSE WATER TO LEAVE THE CONSTRUCTION SITE.
6. MEASURES SHALL BE CLEANED AND REPAIRED AS NEEDED. SEDIMENT SHALL BE REMOVED WHEN ACCUMULATION REACHES ONE-HALF OF THE MEASURE HEIGHT. SEDIMENT SHALL BE DISPOSED OF AS UNSUITABLE MATERIAL.
7. PAYMENT OF INLET PROTECTION SHALL BE MADE UNDER GEOTEXTILE FOR SILT FENCE.
8. PAYMENT FOR MONITORING INLET PROTECTION SHALL BE MADE UNDER THE MONITORING EROSION & SEDIMENT CONTROL PLAN ITEM.
9. PAYMENT FOR MAINTAINING INLET PROTECTION SHALL BE MADE UNDER THE FIELD MAINTENANCE OF EROSION & SEDIMENT CONTROL PLAN ITEM, UNLESS MAINTENANCE IS REQUIRED DUE TO POOR INSTALLATION PRACTICES.

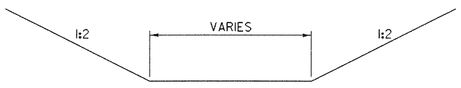

SECTION A-A

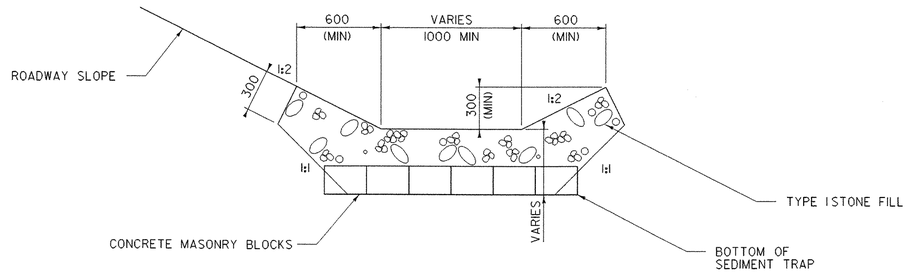

SECTION B-B

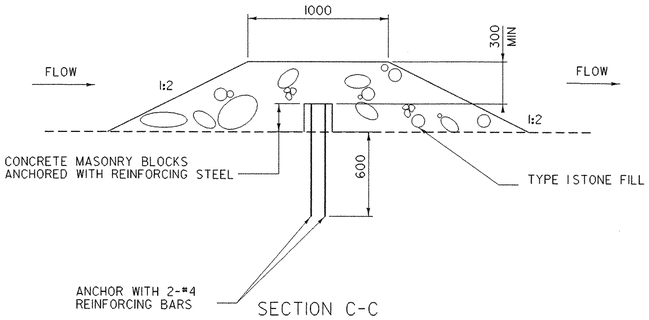

SECTION C-C

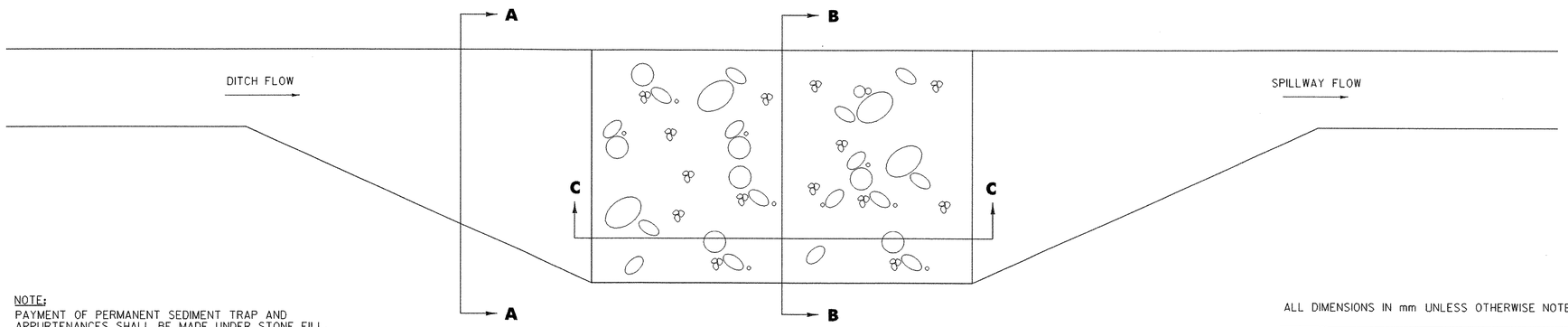

PLAN VIEW

PERMANENT SEDIMENT TRAP DETAILS
NOT TO SCALE

NOTE:
PAYMENT OF PERMANENT SEDIMENT TRAP AND APPURTENANCES SHALL BE MADE UNDER STONE FILL, TYPE I (MOD - PERM SED TRAP).

ALL DIMENSIONS IN mm UNLESS OTHERWISE NOTED.

McFARLAND-JOHNSON, INC

PROJECT NAME: HIGHGATE - FRANKLIN
PROJECT NUMBER: STP RS 0301(1) SA

FILE NAME: ...85c060/design/dc060dtl.dgn
PROJECT LEADER: DELLASANTA
DESIGNED BY: SQUAD B
IPARM FILE NAME: dc060ec3.i

PLOT DATE: 09-MAY-2005
DRAWN BY: SQUAD B
CHECKED BY: SQUAD B
SHEET 162 OF 450

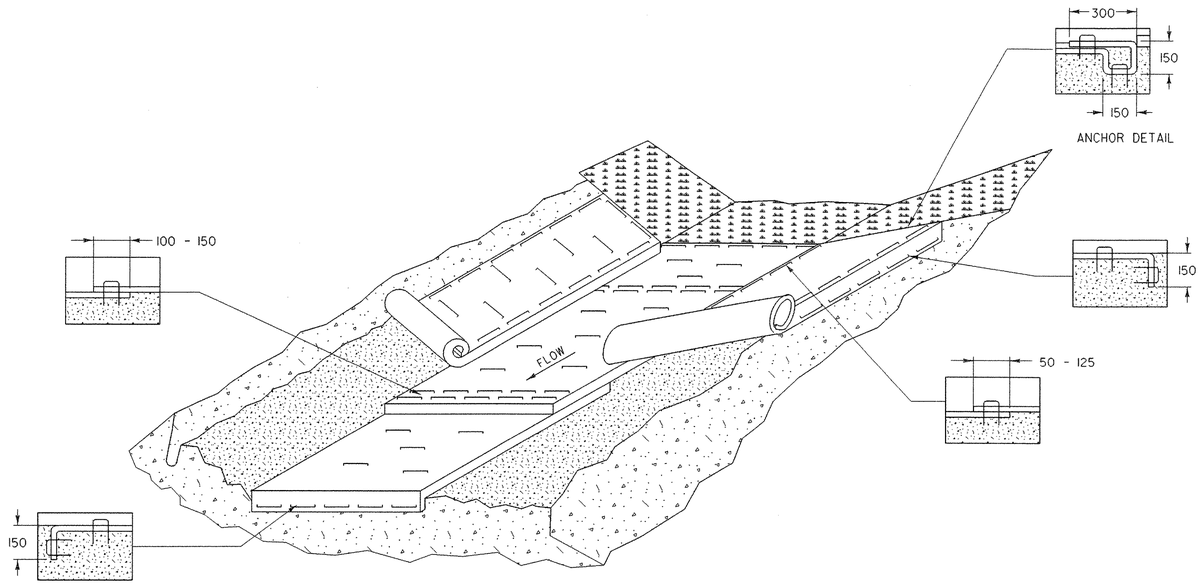

DETAIL "D"
EROSION MATTING FOR DITCHES

EROSION MATTING NOTES:

1. THE FOLLOWING CHARTS SHALL BE USED TO DETERMINE THE APPROPRIATE EROSION CONTROL MEASURE:

DITCH AND CHANNEL PROTECTION	
SLOPE	LINING
< 1%	GRASS
1% TO 4 %	EROSION MATTING
4 % TO 10 %	STONE FILL, TYPE I
> 10 %	STONE FILL, TYPE II

STONE FILL THICKNESS	
STONE FILL TYPE	THICKNESS
TYPE I	0.3 m
TYPE II	0.6 m

2. WATER MAY NEED TO BE DIVERTED TO ALLOW PROPER MATTING INSTALLATION.
3. GRADE AND SMOOTH CHANNEL TO PROVIDE GOOD MATTING TO SOIL SURFACE CONTACT.
4. APPLY FERTILIZER, LIME, AND SEED PRIOR TO PLACING MATTING.
5. INSTALL MATTING IN THE CENTER OF THE CHANNEL, IN THE DIRECTION OF THE WATER FLOW.
6. INSTALL MATTING ON THE SIDE SLOPES OF THE CHANNEL, OVERLAPPING THE CENTER MAT.
7. ANCHOR MATTING AS SHOWN, UTILIZING ANCHOR STAPLES. STAPLE PLACEMENT SHALL BE DETERMINED BY THE MANUFACTURER'S INTALLATION INSTRUCTIONS.
8. MEASURES SHALL BE INSPECTED EVERY SEVEN (7) CALENDAR DAYS AND WITHIN 24 HOURS OF A STORM EVENT GREAT ENOUGH TO CAUSE WATER TO LEAVE THE CONSTRUCTION SITE.
9. MEASURES SHALL BE REPAIRED AND RESTAPLED AS NECESSARY TO ENSURE PROPER FUNCTION.
10. PAYMENT FOR INSTALLATION OF MATTING SHALL BE MADE UNDER THE EROSION MATTING ITEM.
11. PAYMENT FOR MONITORING EROSION CONTROL MATTING SHALL BE MADE UNDER THE MONITORING EROSION & SEDIMENT CONTROL PLAN ITEM.
12. PAYMENT FOR MAINTAINING EROSION CONTROL MATTING SHALL BE MADE UNDER THE FIELD MAINTENANCE OF EROSION & SEDIMENT CONTROL PLAN ITEM, UNLESS MAINTENANCE IS REQUIRED DUE TO POOR INSTALLATION PRACTICES.

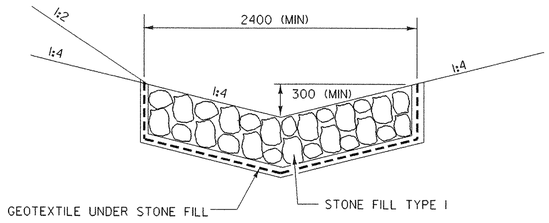

TEMPORARY
STONE LINED
DITCH

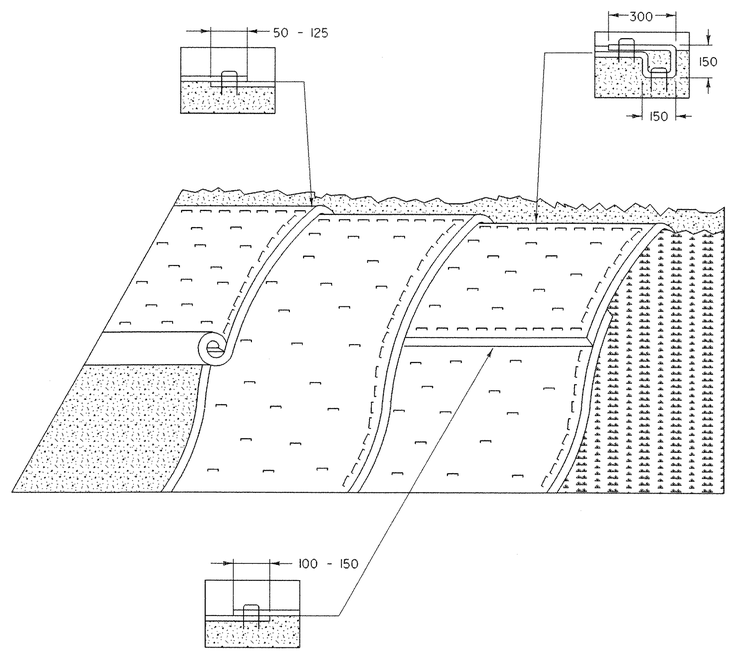

DETAIL "C"
EROSION MATTING FOR SLOPES STEEPER THAN 1:3

EROSION MATTING NOTES:

1. EROSION CONTROL MATTING SHALL BE USED FOR THE FOLLOWING REASONS:
   - SIDE SLOPES > 3:1 (H:V)
   - AREAS WHERE SEED AND MULCH WILL NOT STAY IN PLACE ALONE
   - WHERE SEEDING IS OUTSIDE THE GROWING SEASON.
2. GRADE AND SMOOTH THE SLOPE TO PROVIDE GOOD MATTING TO SOIL SURFACE CONTACT.
3. APPLY FERTILIZER, LIME, AND SEED PRIOR TO PLACING MATTING.
4. ANCHOR MATTING AS SHOWN, UTILIZING ANCHOR STAPLES. STAPLE PLACEMENT SHALL BE DETERMINED BY THE MANUFACTURER'S INTALLATION INSTRUCTIONS.
5. UNROLL MATTING VERTICALLY DOWN SLOPE IN THE DIRECTION OF WATER FLOW.
6. OVERLAP UPPER MATTING OVER LOWER MATTING AS SHOWN.
7. OVERLAP ADJACENT MATTING AS SHOWN.
8. CUT EXCESS MATTING AT END OF SLOPE AND ANCHOR THE END.
9. MEASURES SHALL BE INSPECTED EVERY SEVEN (7) CALENDAR DAYS AND WITHIN 24 HOURS OF A STORM EVENT GREAT ENOUGH TO CAUSE WATER TO LEAVE THE CONSTRUCTION SITE.
10. MATTING SHALL BE REPAIRED AND RESTAPLED AS NECESSARY TO ENSURE PROPER FUNCTION.
11. PAYMENT FOR INSTALLATION OF MATTING SHALL BE MADE UNDER THE EROSION MATTING ITEM.
12. PAYMENT FOR MONITORING EROSION CONTROL MATTING SHALL BE MADE UNDER THE MONITORING EROSION & SEDIMENT CONTROL PLAN ITEM.
13. PAYMENT FOR MAINTAINING EROSION CONTROL MATTING SHALL BE MADE UNDER THE FIELD MAINTENANCE OF EROSION & SEDIMENT CONTROL PLAN ITEM, UNLESS MAINTENANCE IS REQUIRED DUE TO POOR INSTALLATION PRACTICES.

ALL DIMENSIONS IN mm UNLESS OTHERWISE NOTED.

McFARLAND-JOHNSON, INC

PROJECT NAME: HIGHGATE - FRANKLIN
PROJECT NUMBER: STP RS 0301(1) SA

FILE NAME: ...85c060/design/dc060dtl.dgn
PROJECT LEADER: DELLASANTA
DESIGNED BY: SQUAD B
IPARM FILE NAME: dc060ec4.i

PLOT DATE: 09-MAY-2005
DRAWN BY: SQUAD B
CHECKED BY: SQUAD B
SHEET 163 OF 450

KEY

ARN	NORTHWOOD RED MAPLE
BP	PAPER BIRCH (SINGLE STEM)
FP	GREEN ASH
OV	AMERICAN HOPHORNBEAM
OR	NORTHERN RED OAK
UAP	'PRINCETON' AMERICAN ELM
AC	SHADBLOW SERVICEBERRY (CLUMP FORM)
VP	BLACKHAW VIBURNUM
SV	LILAC
HH	HYPERION DAYLILY
LP	LUPINE
HF	COMMON ORANGE DAYLILY

DECIDUOUS TREES

~~STA 1+018 LT (1 UAP)~~ BP
~~STA 1+022 LT (1 UAP)~~ BP
~~STA 1+026 LT (1 UAP)~~ BP
~~STA 1+020 RT (1 UAP)~~
~~STA 1+021 RT (1 UAP)~~
~~STA 1+023 RT (1 UAP)~~
~~STA 1+025 RT (1 UAP)~~
~~STA 1+029 RT (1 UAP)~~
~~STA 1+037 RT (1 UAP)~~
~~STA 1+046 RT (1 UAP)~~
~~STA 1+051 RT (1 UAP)~~
~~STA 1+063 RT (1 UAP)~~
STA 1+012 LT (1 BP)
STA 1+014 LT (1 BP)
STA 1+016 LT (1 BP)
STA 1+020 LT (1 BP)
STA 1+024 LT (1 BP)
STA 1+029 LT (1 BP)
STA 1+032 LT (1 BP)
STA 1+035 LT (1 BP)

GROUND COVER AND VINES

~~STA 1+007 LT (56 HH)~~
~~STA 1+013 RT (60 HH)~~
STA 1+014 TO STA 1+037 LT (485 HF)

NEW LOCATION FOR TRANSPLANTED MATERIAL ALONG ROUTE 78

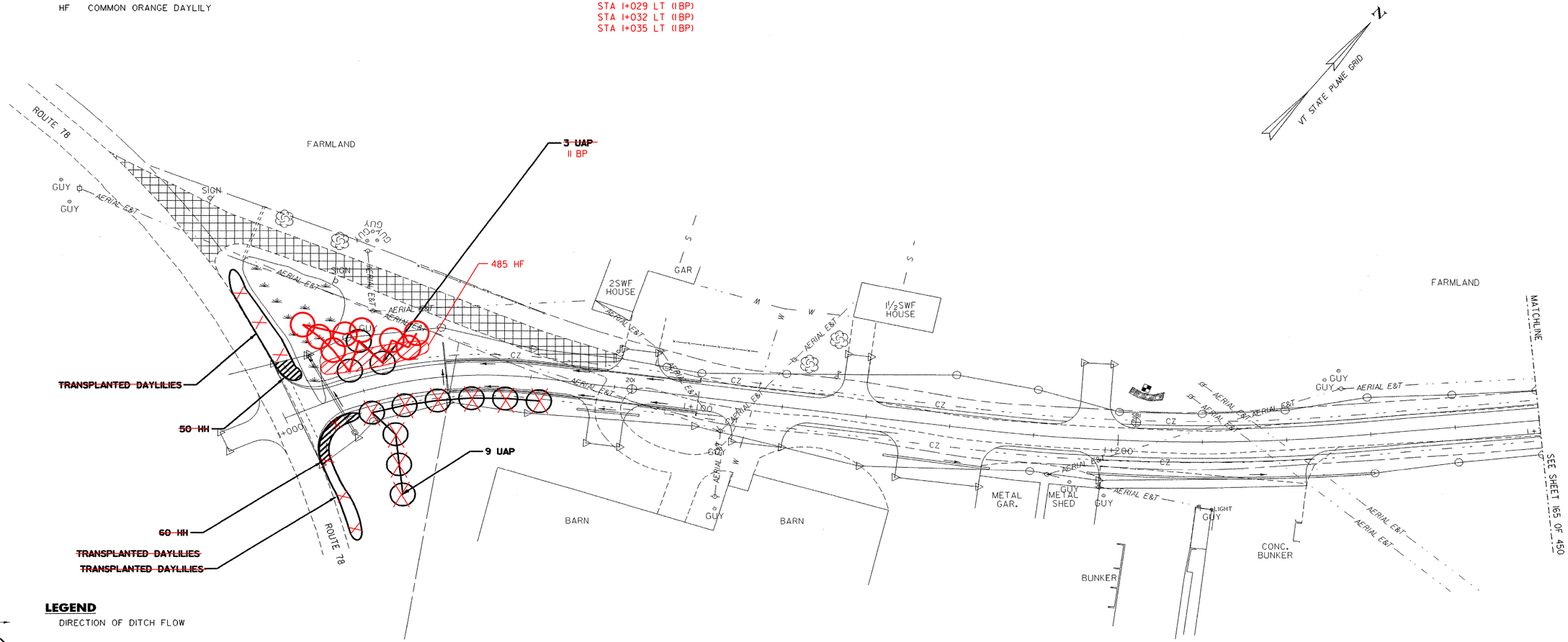

LEGEND

- DIRECTION OF DITCH FLOW
- PROPOSED TREE
- EXISTING TREES
- PROPOSED SHRUB
- PROPOSED GROUND COVER
- NEW LOCATION FOR TRANSPLANTED MATERIAL
- EXISTING PLANT MATERIAL TO BE TRANSPLANTED
- TREE PROTECTION ZONE WITH FENCING
- LIMIT OF CUT
- LIMIT OF FILL

LANDSCAPE PLAN

0 10 20 30
1:500

PROJECT NAME: HIGHGATE - FRANKLIN
PROJECT NUMBER: STP RS 0301(I) SA

FILE NAME:85c060/design/dc060landbdr.dgnPLOT DATE: 09-MAY-2005
PROJECT LEADER: DELLASANTA DRAWN BY: SQUAD B
DESIGNED BY: SQUAD B CHECKED BY: SQUAD B
IPARM FILE NAME: dc060land01.i SHEET 164 OF 450

VAOT Metric

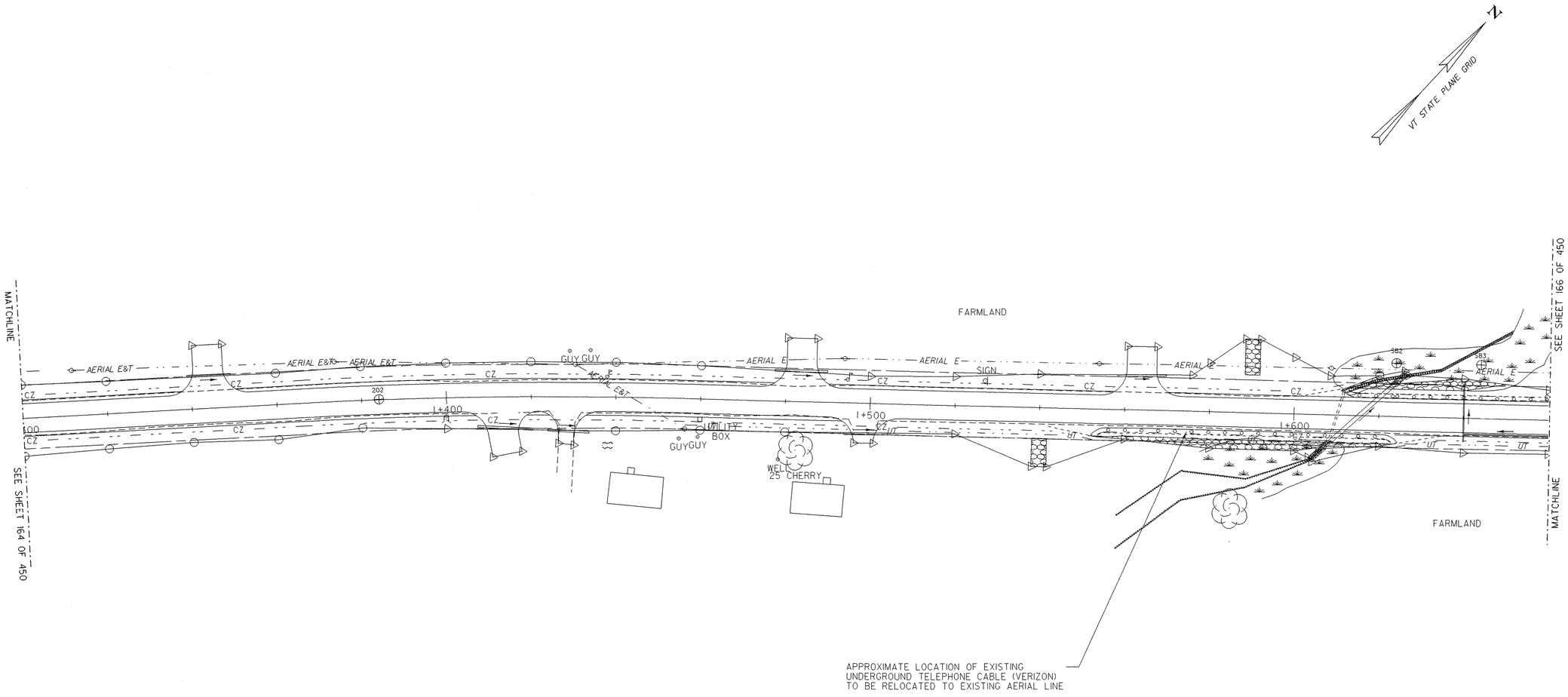

LEGEND

- DIRECTION OF DITCH FLOW
- PROPOSED TREE
- EXISTING TREES
- PROPOSED SHRUB
- PROPOSED GROUND COVER
- NEW LOCATION FOR TRANSPLANTED MATERIAL
- EXISTING PLANT MATERIAL TO BE TRANSPLANTED
- TREE PROTECTION ZONE WITH FENCING
- LIMIT OF CUT
- LIMIT OF FILL

LANDSCAPE PLAN

0 10 20 30
1:500

PROJECT NAME:	HIGHGATE - FRANKLIN
PROJECT NUMBER:	STP RS 0301(1) SA
FILE NAME:85c060/design/dc060landbdr.dgn	PLOT DATE: 09-MAY-2005
PROJECT LEADER: DELLASANTA	DRAWN BY: SQUAD B
DESIGNED BY: SQUAD B	CHECKED BY: SQUAD B
IPARM FILE NAME: dc060land02.i	SHEET 165 OF 450

VAOT Metric

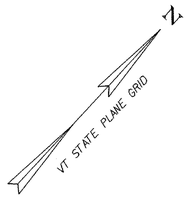

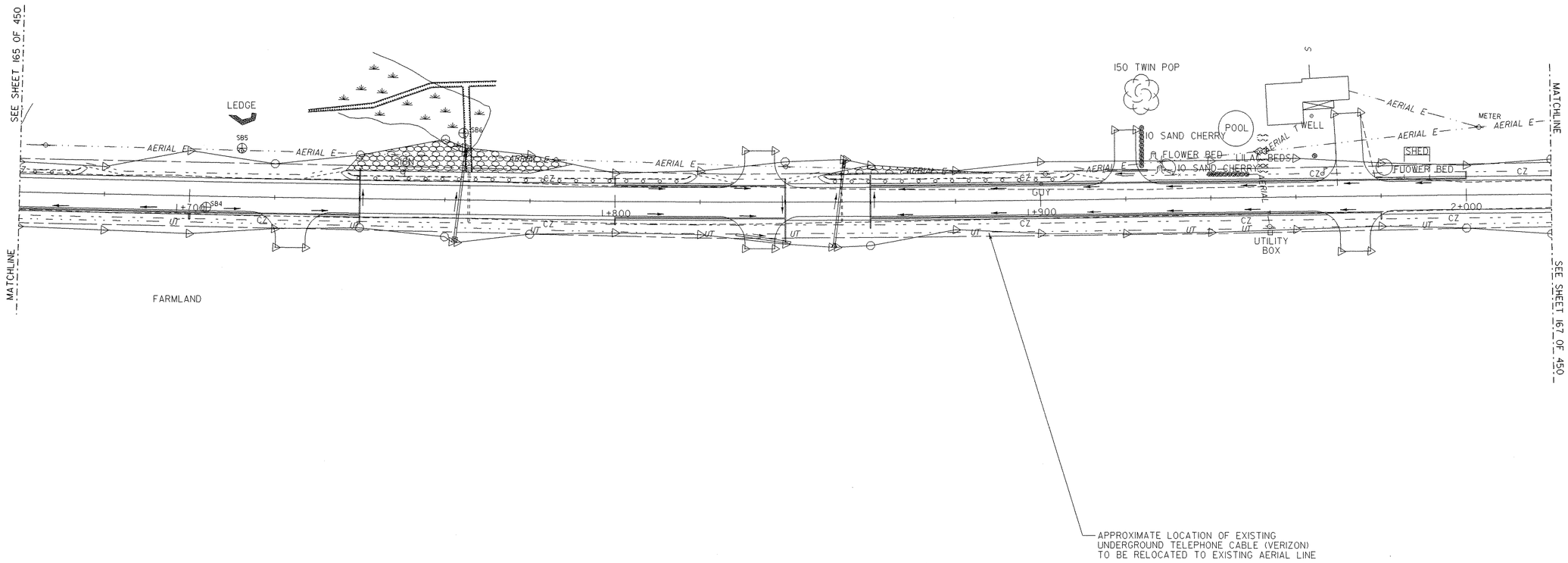

LEGEND

- DIRECTION OF DITCH FLOW
- PROPOSED TREE
- EXISTING TREES
- PROPOSED SHRUB
- PROPOSED GROUND COVER
- NEW LOCATION FOR TRANSPLANTED MATERIAL
- EXISTING PLANT MATERIAL TO BE TRANSPLANTED
- TREE PROTECTION ZONE WITH FENCING
- LIMIT OF CUT
- LIMIT OF FILL

LANDSCAPE PLAN

0 10 20 30
1:500

PROJECT NAME:	HIGHGATE - FRANKLIN
PROJECT NUMBER:	STP RS 0301(1) SA
FILE NAME:85c060/design/dc060landbdr.dgn	PLOT DATE: 09-MAY-2005
PROJECT LEADER: DELLASANTA	DRAWN BY: SQUAD B
DESIGNED BY: SQUAD B	CHECKED BY: SQUAD B
IPARM FILE NAME: dc060land03.i	SHEET 166 OF 450

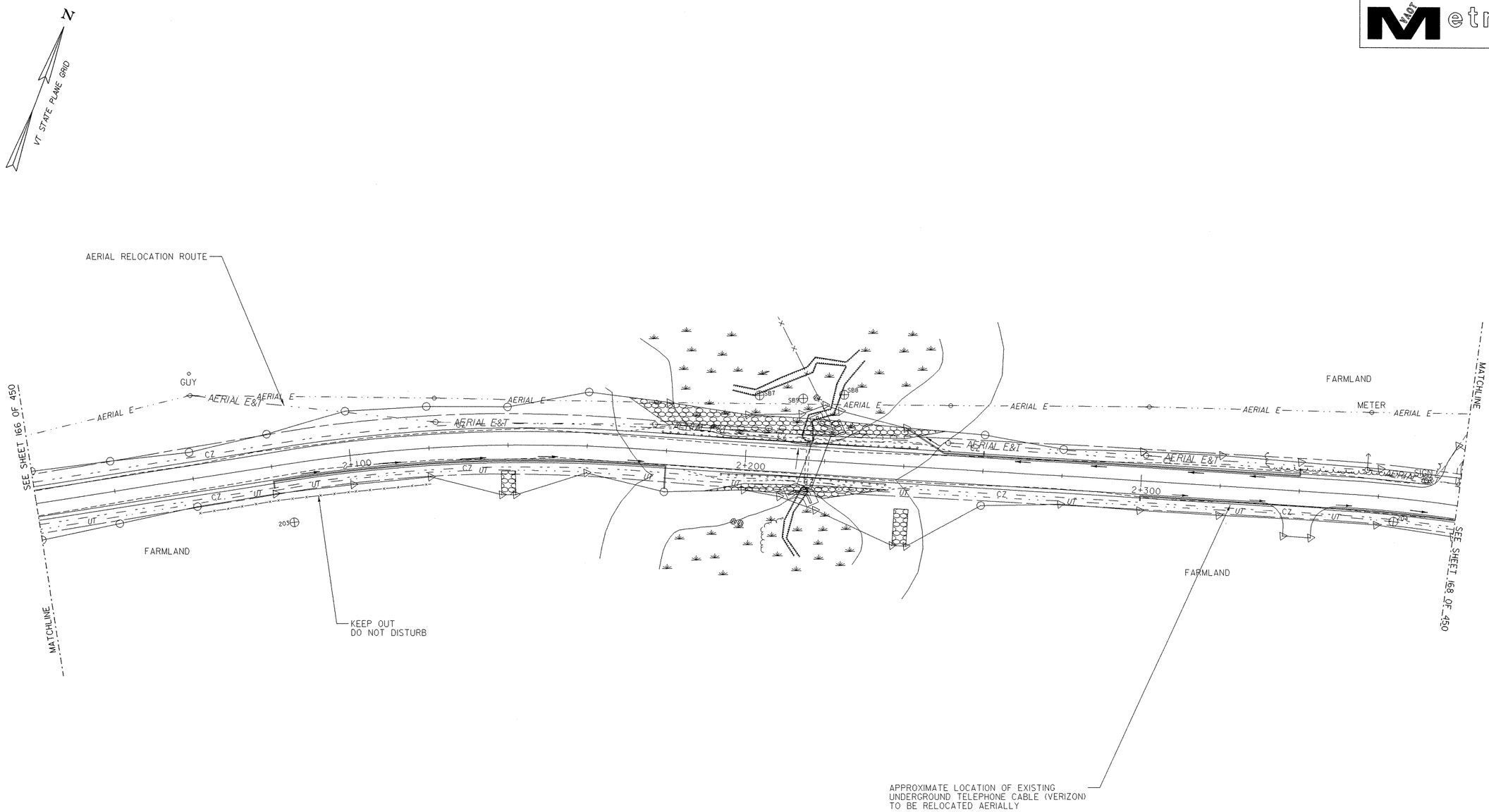

LEGEND

- DIRECTION OF DITCH FLOW
- PROPOSED TREE
- EXISTING TREES
- PROPOSED SHRUB
- PROPOSED GROUND COVER
- NEW LOCATION FOR TRANSPLANTED MATERIAL
- EXISTING PLANT MATERIAL TO BE TRANSPLANTED
- TREE PROTECTION ZONE WITH FENCING
- LIMIT OF CUT
- LIMIT OF FILL

LANDSCAPE PLAN

0 10 20 30
1:500

PROJECT NAME:	HIGHGATE - FRANKLIN
PROJECT NUMBER:	STP RS 0301(1) SA

FILE NAME:85c060/design/dc060landbdr.dgn	PLOT DATE: 09-MAY-2005
PROJECT LEADER: DELLASANTA	DRAWN BY: SQUAD B
DESIGNED BY: SQUAD B	CHECKED BY: SQUAD B
IPARM FILE NAME: dc060land04.i	SHEET 167 OF 450

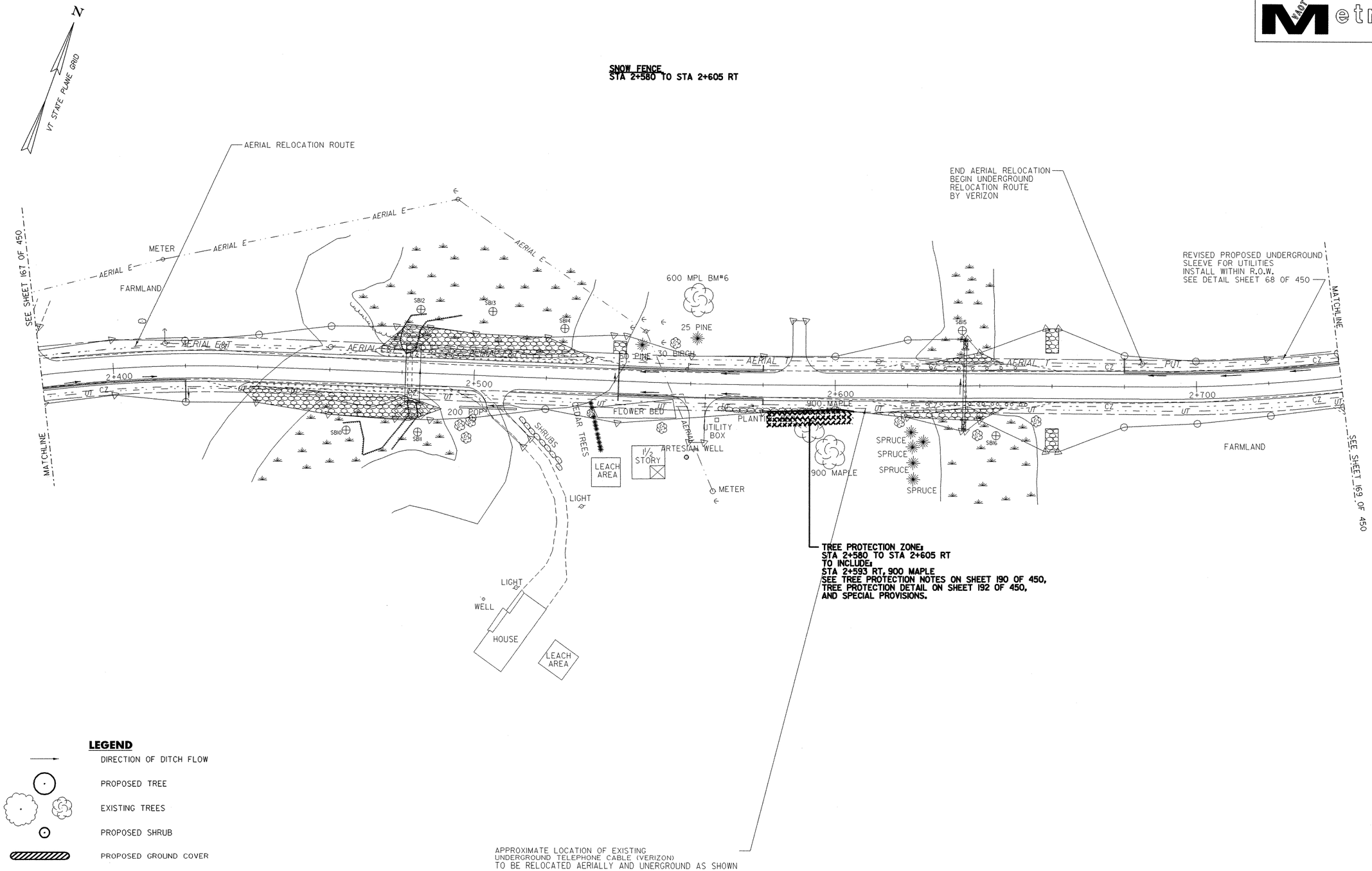

LEGEND

- DIRECTION OF DITCH FLOW
- PROPOSED TREE
- EXISTING TREES
- PROPOSED SHRUB
- PROPOSED GROUND COVER
- NEW LOCATION FOR TRANSPLANTED MATERIAL
- EXISTING PLANT MATERIAL TO BE TRANSPLANTED
- TREE PROTECTION ZONE WITH FENCING
- LIMIT OF CUT
- LIMIT OF FILL

LANDSCAPE PLAN

0 10 20 30
1:500

PROJECT NAME:	HIGHGATE - FRANKLIN
PROJECT NUMBER:	STP RS 0301(1) SA
FILE NAME: 85c060/design/dc060landbdr.dgn	PLOT DATE: 09-MAY-2005
PROJECT LEADER: DELLASANTA	DRAWN BY: SQUAD B
DESIGNED BY: SQUAD B	CHECKED BY: SQUAD B
IPARM FILE NAME: dc060land05.i	SHEET 168 OF 450

VAOT Metric

N

VT STATE PLANE GRID

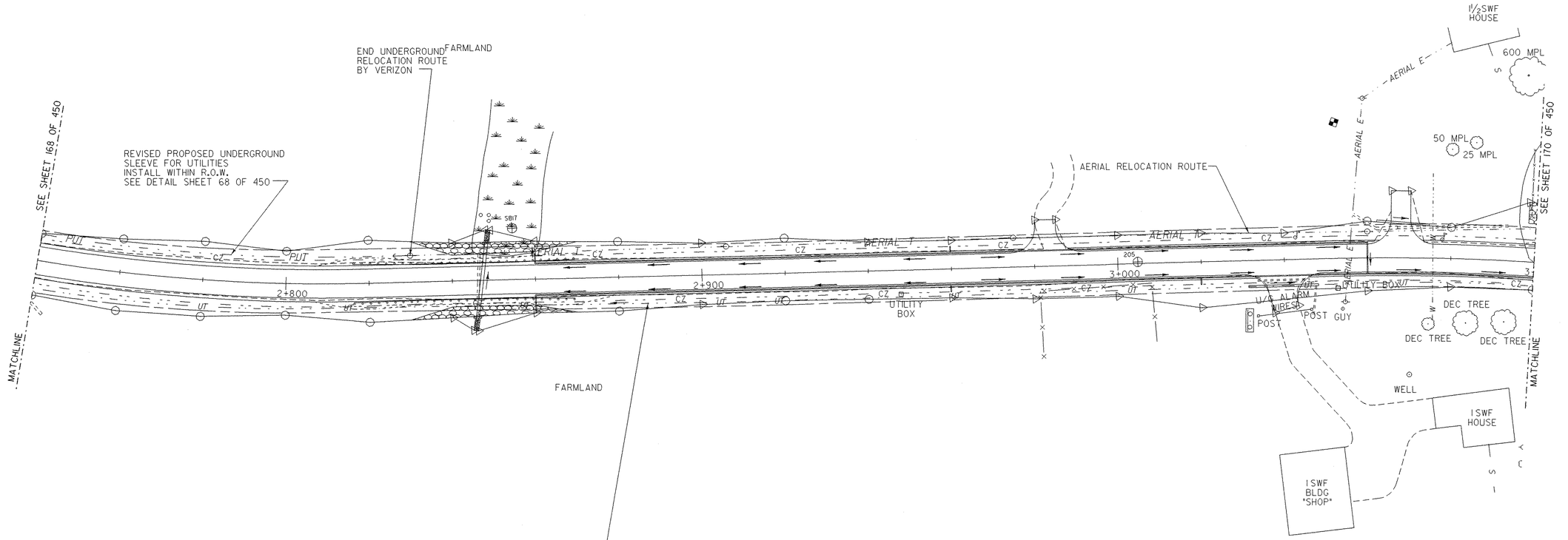

LEGEND

- DIRECTION OF DITCH FLOW
- PROPOSED TREE
- EXISTING TREES
- PROPOSED SHRUB
- PROPOSED GROUND COVER
- NEW LOCATION FOR TRANSPLANTED MATERIAL
- EXISTING PLANT MATERIAL TO BE TRANSPLANTED
- TREE PROTECTION ZONE WITH FENCING
- LIMIT OF CUT
- LIMIT OF FILL

LANDSCAPE PLAN

0 10 20 30

1:500

PROJECT NAME:	HIGHGATE - FRANKLIN
PROJECT NUMBER:	STP RS 0301(I) SA
FILE NAME: 85c060/design/dc060landbdr.dgn	PLOT DATE: 09-MAY-2005
PROJECT LEADER: DELLASANTA	DRAWN BY: SQUAD B
DESIGNED BY: SQUAD B	CHECKED BY: SQUAD B
IPARM FILE NAME: dc060land06.i	SHEET 169 OF 450

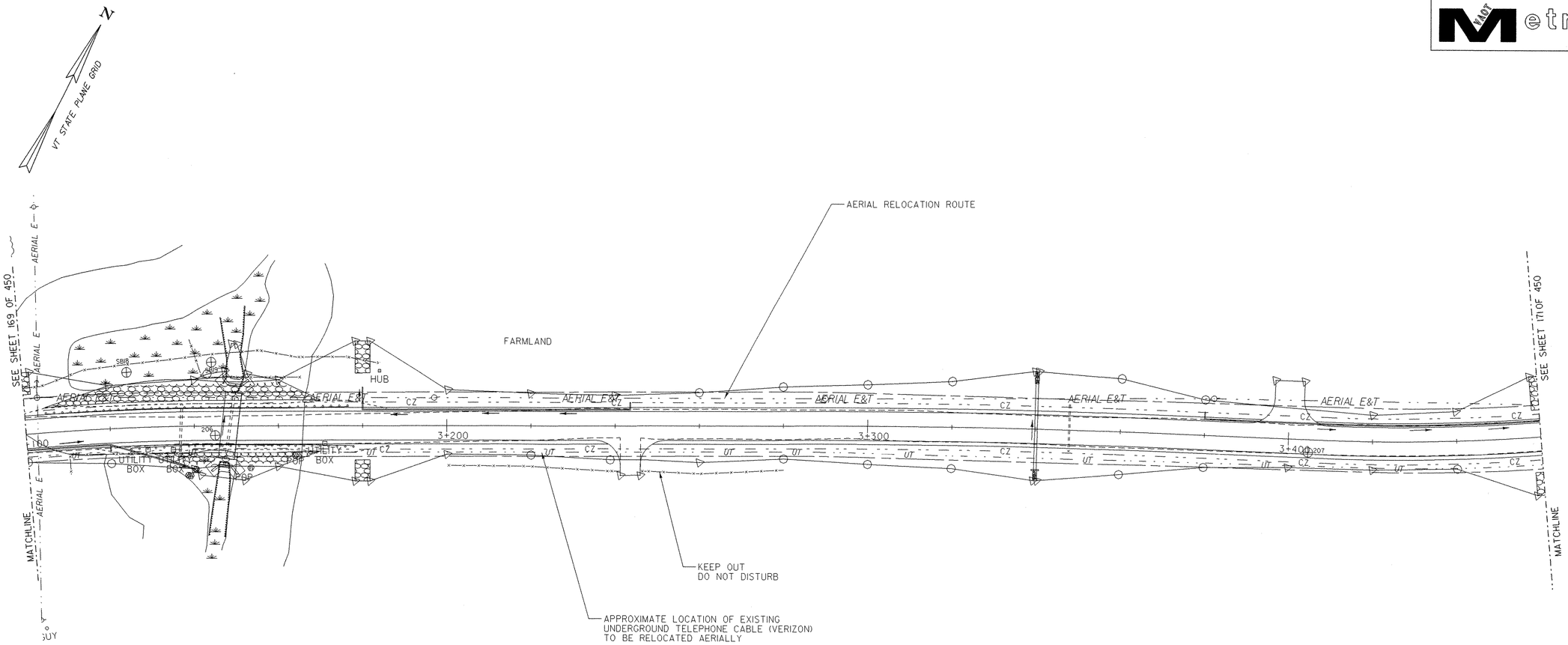

LEGEND

- DIRECTION OF DITCH FLOW
- PROPOSED TREE
- EXISTING TREES
- PROPOSED SHRUB
- PROPOSED GROUND COVER
- NEW LOCATION FOR TRANSPLANTED MATERIAL
- EXISTING PLANT MATERIAL TO BE TRANSPLANTED
- TREE PROTECTION ZONE WITH FENCING
- LIMIT OF CUT
- LIMIT OF FILL

LANDSCAPE PLAN

0 10 20 30
1:500

PROJECT NAME: HIGHGATE - FRANKLIN	
PROJECT NUMBER: STP RS 0301(1) SA	
FILE NAME:85c060/design/dc060landbdr.dgn	PLOT DATE: 09-MAY-2005
PROJECT LEADER: DELLASANTA	DRAWN BY: SQUAD B
DESIGNED BY: SQUAD B	CHECKED BY: SQUAD B
IPARM FILE NAME: dc060land07.i	SHEET 170 OF 450

VT STATE PLANE GRID

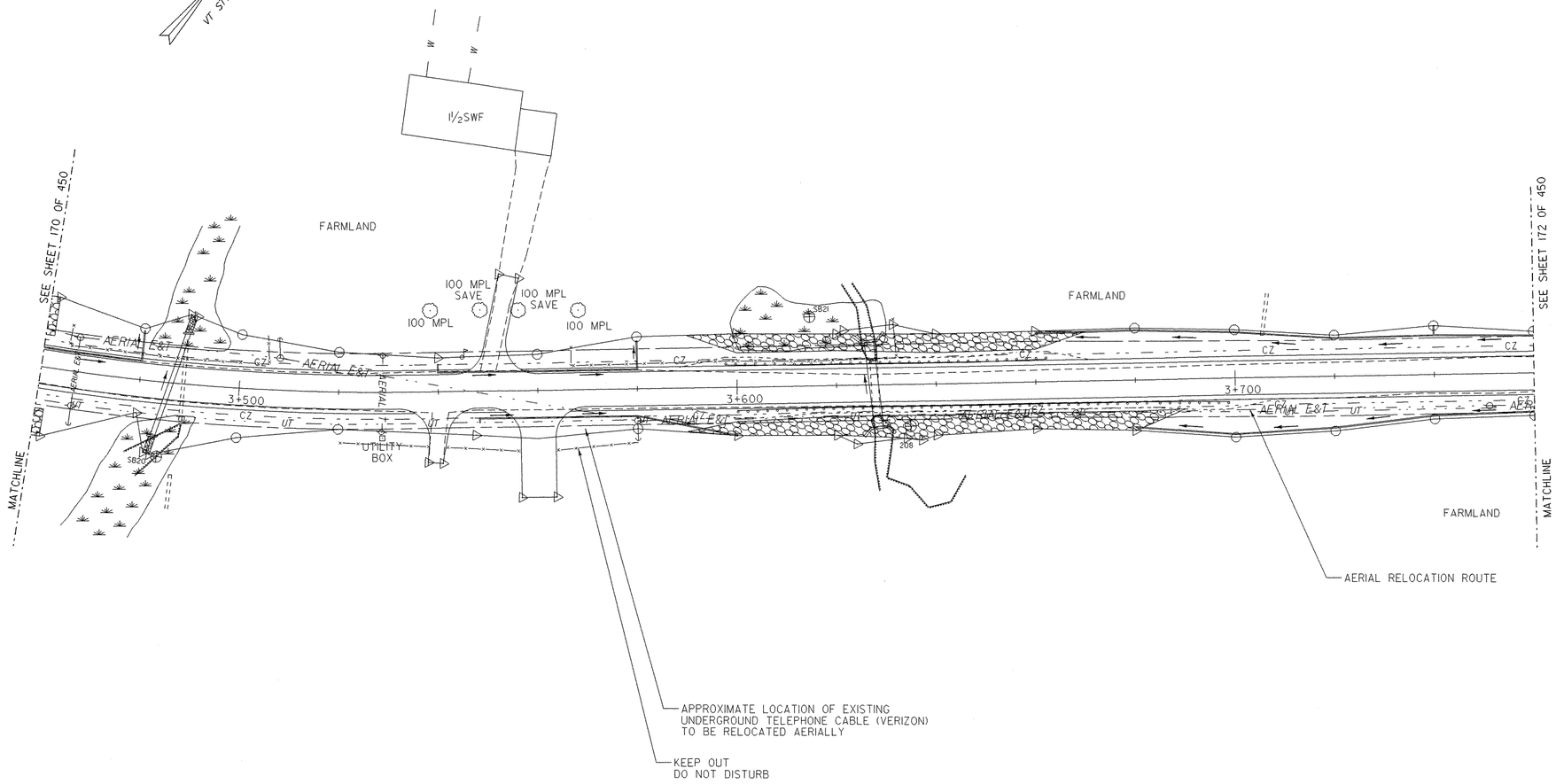

LEGEND

- DIRECTION OF DITCH FLOW
- PROPOSED TREE
- EXISTING TREES
- PROPOSED SHRUB
- PROPOSED GROUND COVER
- NEW LOCATION FOR TRANSPLANTED MATERIAL
- EXISTING PLANT MATERIAL TO BE TRANSPLANTED
- TREE PROTECTION ZONE WITH FENCING
- LIMIT OF CUT
- LIMIT OF FILL

LANDSCAPE PLAN

0 10 20 30

1:500

PROJECT NAME:	HIGHGATE - FRANKLIN
PROJECT NUMBER:	STP RS 0301(1) SA
FILE NAME:85c060/design/dc060landbdr.dgn	PLOT DATE: 09-MAY-2005
PROJECT LEADER: DELLASANTA	DRAWN BY: SQUAD B
DESIGNED BY: SQUAD B	CHECKED BY: SQUAD B
IPARM FILE NAME: dc060land08.i	SHEET 171 OF 450

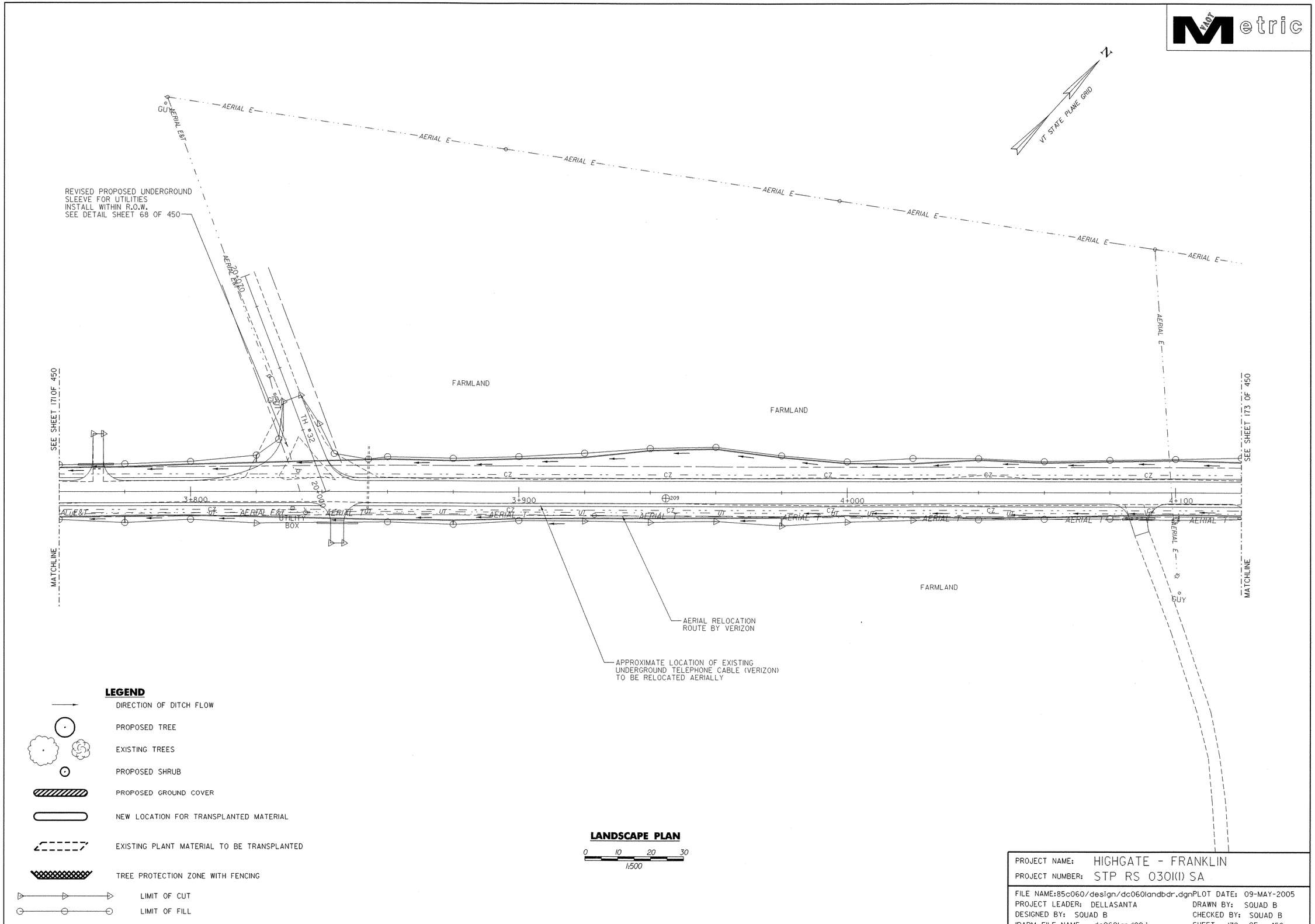

PROJECT NAME: HIGHGATE - FRANKLIN
PROJECT NUMBER: STP RS 0301(1) SA

FILE NAME: 85c060/design/dc060landbdr.dgn PLOT DATE: 09-MAY-2005
PROJECT LEADER: DELLASANTA DRAWN BY: SQUAD B
DESIGNED BY: SQUAD B CHECKED BY: SQUAD B
IPARM FILE NAME: dc060land09.i SHEET 172 OF 450

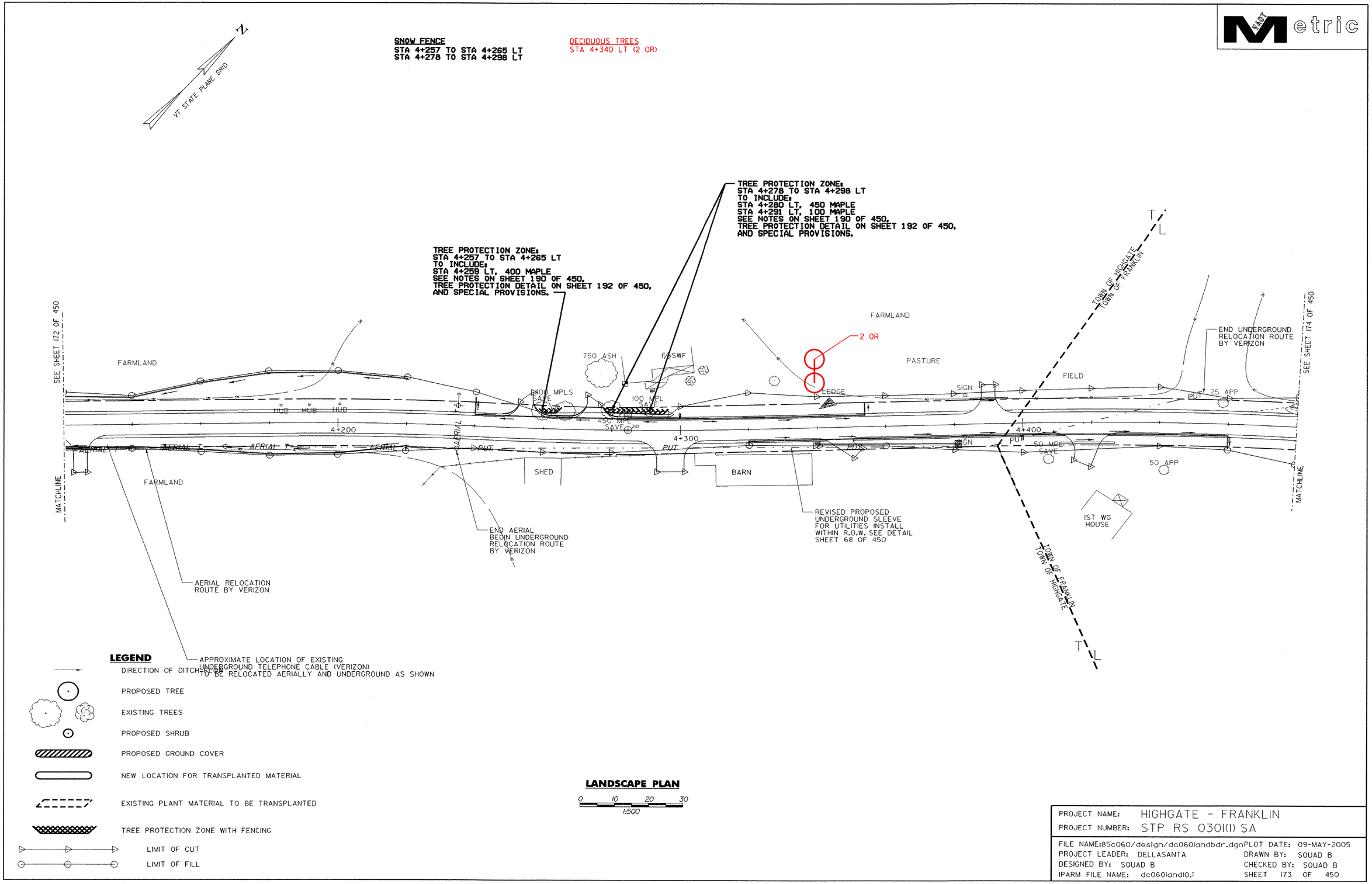

PROJECT NAME:	HIGHGATE - FRANKLIN
PROJECT NUMBER:	STP RS 0301(1) SA

FILE NAME: 85c060/design/dc060landbdr.dgn	PLOT DATE: 09-MAY-2005
PROJECT LEADER: DELLASANTA	DRAWN BY: SQUAD B
DESIGNED BY: SQUAD B	CHECKED BY: SQUAD B
IPARM FILE NAME: dc060land10.i	SHEET 173 OF 450

VAOT Metric

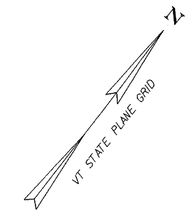

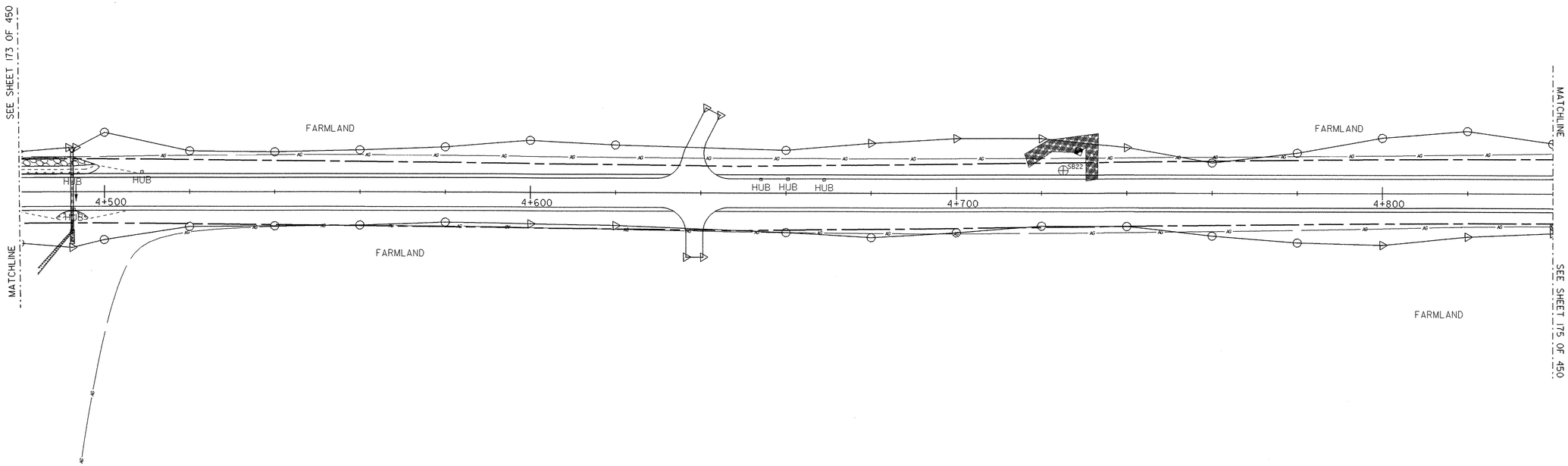

LEGEND

- DIRECTION OF DITCH FLOW
- PROPOSED TREE
- EXISTING TREES
- PROPOSED SHRUB
- PROPOSED GROUND COVER
- NEW LOCATION FOR TRANSPLANTED MATERIAL
- EXISTING PLANT MATERIAL TO BE TRANSPLANTED
- TREE PROTECTION ZONE WITH FENCING
- LIMIT OF CUT
- LIMIT OF FILL

LANDSCAPE PLAN

0 10 20 30
1:500

PROJECT NAME:	HIGHGATE - FRANKLIN
PROJECT NUMBER:	STP RS 0301(I) SA
FILE NAME:85c060/design/dc060landbdr.dgn	PLOT DATE: 09-MAY-2005
PROJECT LEADER: DELLASANTA	DRAWN BY: SQUAD B
DESIGNED BY: SQUAD B	CHECKED BY: SQUAD B
IPARM FILE NAME: dc060landll.i	SHEET 174 OF 450

SNOW FENCE
STA 4+915 TO STA 4+935 LT
STA 4+945 TO STA 4+995 LT

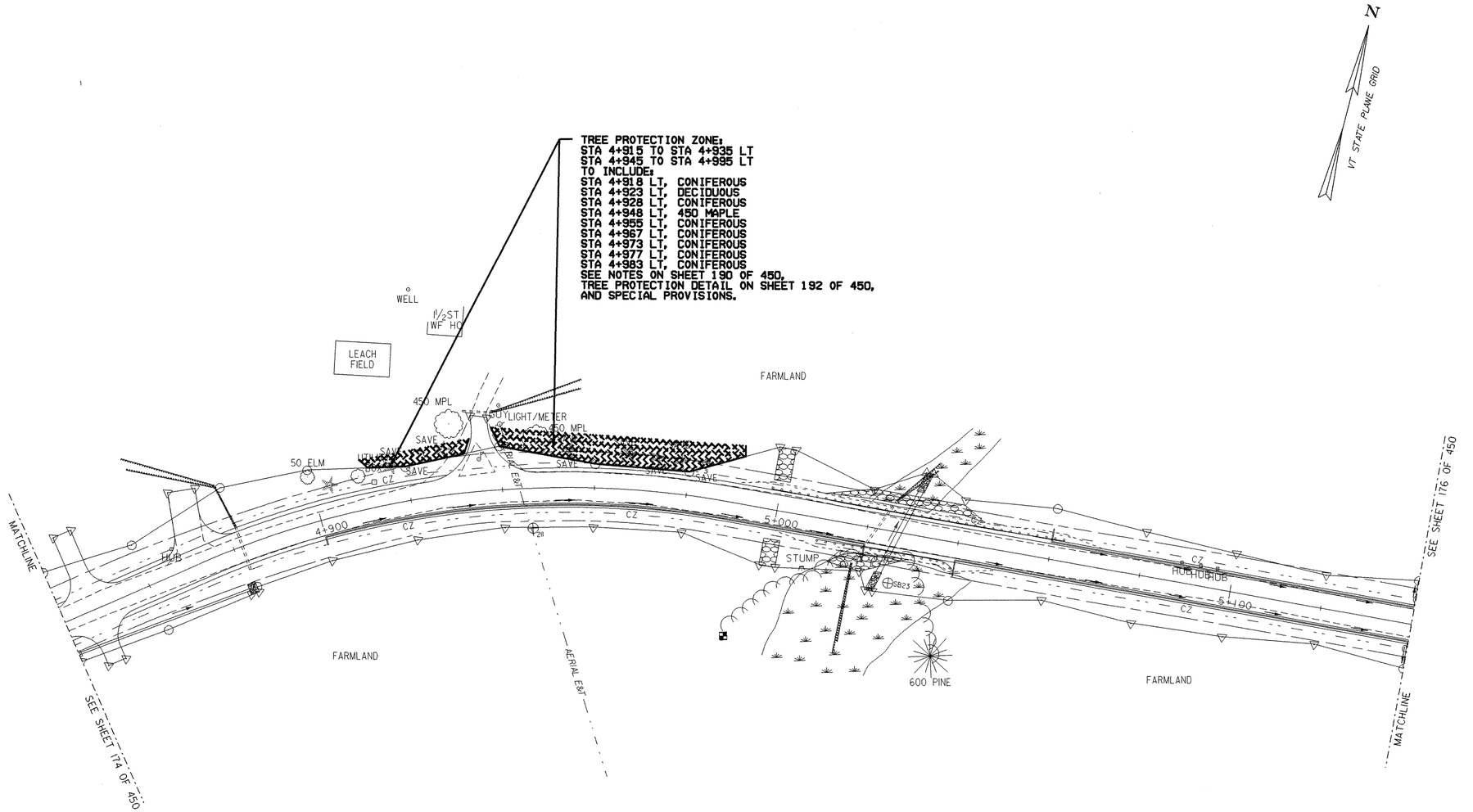

LEGEND

- DIRECTION OF DITCH FLOW
- PROPOSED TREE
- EXISTING TREES
- PROPOSED SHRUB
- PROPOSED GROUND COVER
- NEW LOCATION FOR TRANSPLANTED MATERIAL
- EXISTING PLANT MATERIAL TO BE TRANSPLANTED
- TREE PROTECTION ZONE WITH FENCING
- LIMIT OF CUT
- LIMIT OF FILL

LANDSCAPE PLAN

0 10 20 30
1:500

PROJECT NAME:	HIGHGATE - FRANKLIN
PROJECT NUMBER:	STP RS 0301(1) SA
FILE NAME:85c060/design/dc060landbdr.dgn	PLOT DATE: 09-MAY-2005
PROJECT LEADER: DELLASANTA	DRAWN BY: SQUAD B
DESIGNED BY: SQUAD B	CHECKED BY: SQUAD B
IPARM FILE NAME: dc060land12.i	SHEET 175 OF 450

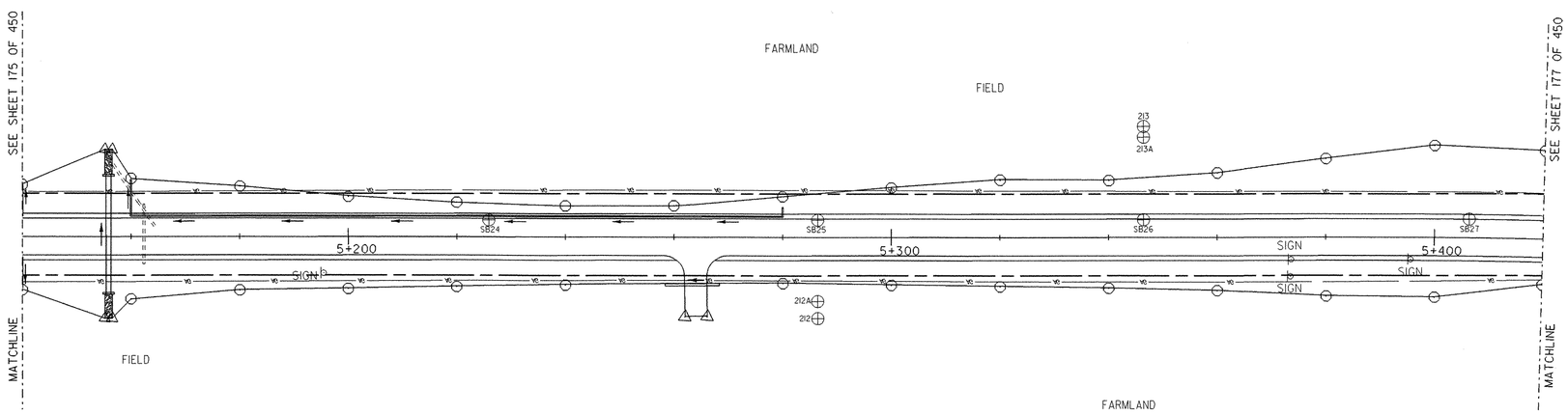

LEGEND

- DIRECTION OF DITCH FLOW
- PROPOSED TREE
- EXISTING TREES
- PROPOSED SHRUB
- PROPOSED GROUND COVER
- NEW LOCATION FOR TRANSPLANTED MATERIAL
- EXISTING PLANT MATERIAL TO BE TRANSPLANTED
- TREE PROTECTION ZONE WITH FENCING
- LIMIT OF CUT
- LIMIT OF FILL

LANDSCAPE PLAN

0 10 20 30

1:500

PROJECT NAME:	HIGHGATE - FRANKLIN
PROJECT NUMBER:	STP RS 0301(1) SA
FILE NAME:85c060/design/dc060landbdr.dgn	PLOT DATE: 09-MAY-2005
PROJECT LEADER: DELLASANTA	DRAWN BY: SQUAD B
DESIGNED BY: SQUAD B	CHECKED BY: SQUAD B
IPARM FILE NAME: dc060land13.i	SHEET 176 OF 450

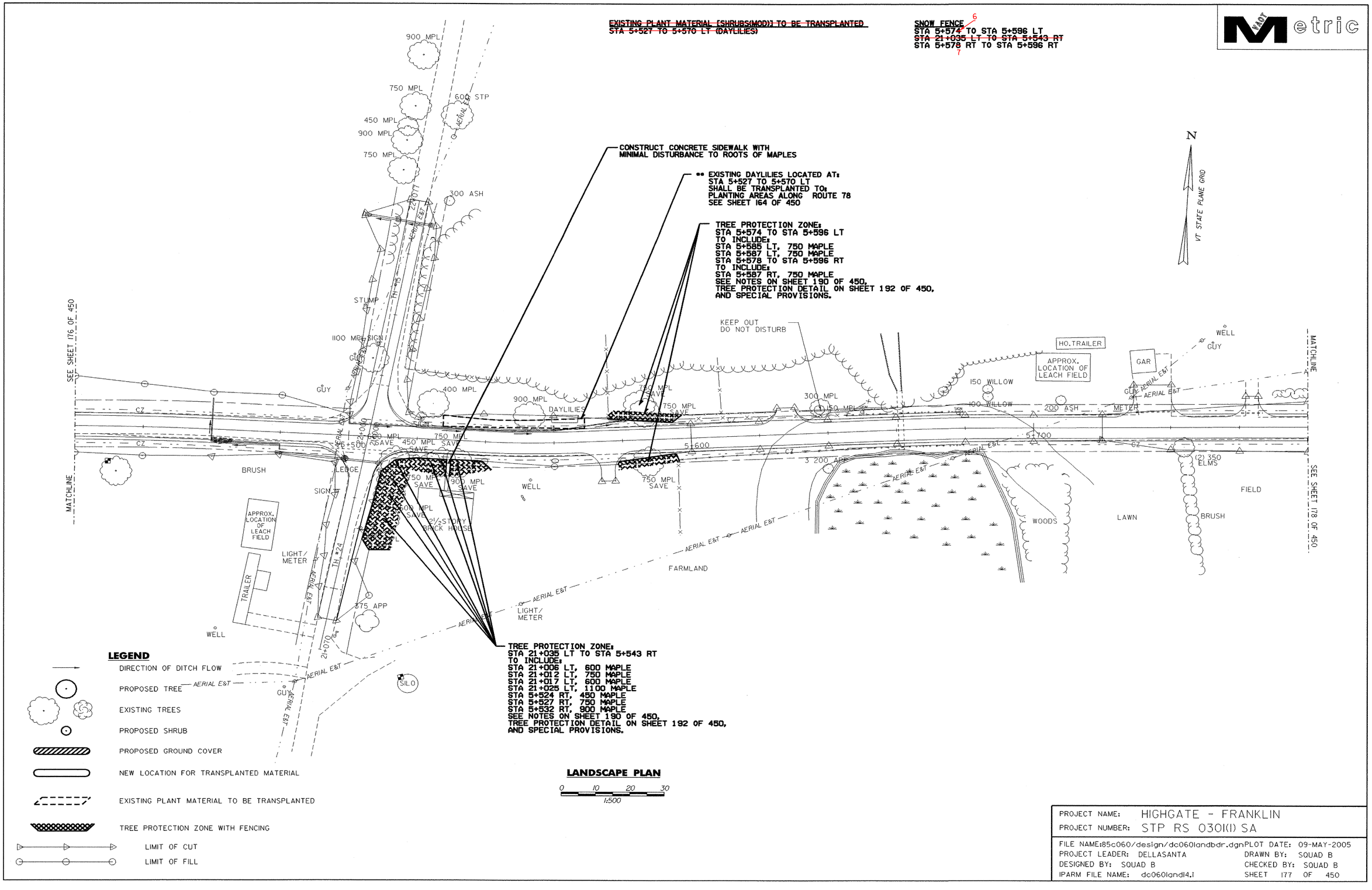

PROJECT NAME:	HIGHGATE - FRANKLIN
PROJECT NUMBER:	STP RS 0301(1) SA
FILE NAME: 85c060/design/dc060landbdr.dgn	PLOT DATE: 09-MAY-2005
PROJECT LEADER: DELLASANTA	DRAWN BY: SQUAD B
DESIGNED BY: SQUAD B	CHECKED BY: SQUAD B
IPARM FILE NAME: dc060land14.i	SHEET 177 OF 450

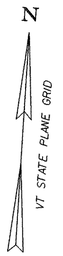

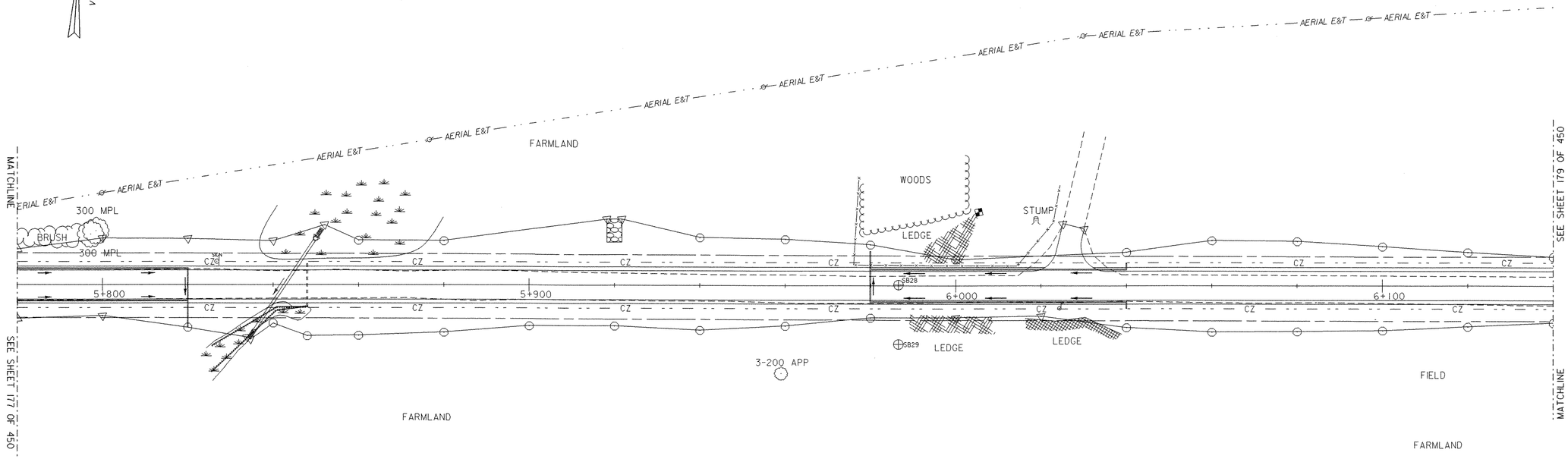

LEGEND

- DIRECTION OF DITCH FLOW
- PROPOSED TREE
- EXISTING TREES
- PROPOSED SHRUB
- PROPOSED GROUND COVER
- NEW LOCATION FOR TRANSPLANTED MATERIAL
- EXISTING PLANT MATERIAL TO BE TRANSPLANTED
- TREE PROTECTION ZONE WITH FENCING
- LIMIT OF CUT
- LIMIT OF FILL

LANDSCAPE PLAN

0 10 20 30
1:500

PROJECT NAME:	HIGHGATE - FRANKLIN
PROJECT NUMBER:	STP RS 0301(1) SA
FILE NAME:85c060/design/dc060landbdr.dgn	PLOT DATE: 09-MAY-2005
PROJECT LEADER: DELLASANTA	DRAWN BY: SQUAD B
DESIGNED BY: SQUAD B	CHECKED BY: SQUAD B
IPARM FILE NAME: dc060landl5.i	SHEET 178 OF 450

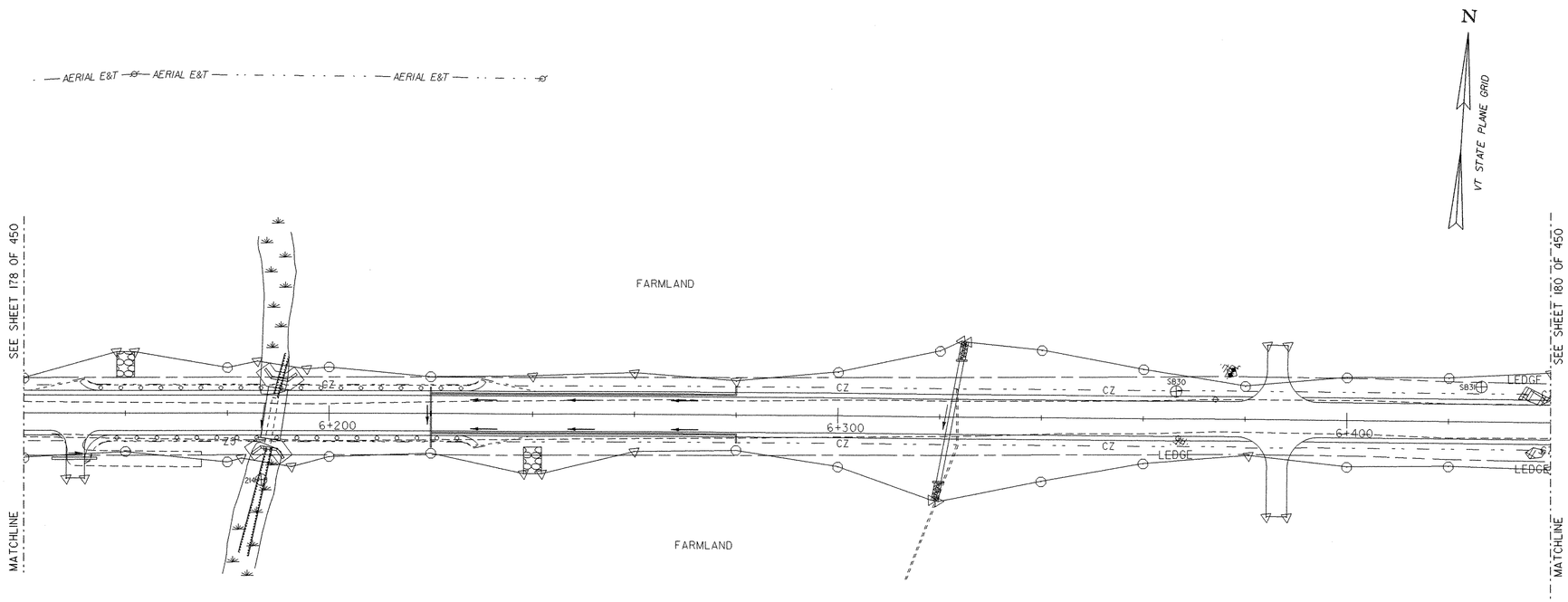

LEGEND

- DIRECTION OF DITCH FLOW
- PROPOSED TREE
- EXISTING TREES
- PROPOSED SHRUB
- PROPOSED GROUND COVER
- NEW LOCATION FOR TRANSPLANTED MATERIAL
- EXISTING PLANT MATERIAL TO BE TRANSPLANTED
- TREE PROTECTION ZONE WITH FENCING
- LIMIT OF CUT
- LIMIT OF FILL

LANDSCAPE PLAN

0 10 20 30
1:500

PROJECT NAME: HIGHGATE - FRANKLIN	
PROJECT NUMBER: STP RS 0301(1) SA	
FILE NAME:85c060/design/dc060landbdr.dgn	PLOT DATE: 09-MAY-2005
PROJECT LEADER: DELLASANTA	DRAWN BY: SQUAD B
DESIGNED BY: SQUAD B	CHECKED BY: SQUAD B
IPARM FILE NAME: dc060land16.1	SHEET 179 OF 450

~~SNOW FENCE~~
~~STA 23+018 TO 23+040 LT~~
~~STA 6+636 TO STA 6+656 LT~~
~~STA 6+661 TO STA 6+678 LT~~
STA 6+626 TO STA 6+656 LT

~~EXISTING PLANT MATERIAL (SHRUBS (MOD)) TO BE TRANSPLANTED~~
~~** STA 6+688 TO 6+716 RT (DAYLILIES)~~
~~** STA 23+021 TO 23+045 RT (DAYLILIES)~~

PLANT MATERIAL (SHRUBS)
STA 6+662 TO STA 6+672 RT 11 EA AC (SERVICE BERRY)

~~DECIDUOUS TREES~~ SEE BELOW
~~STA 6+600 RT (1 QR)~~
~~STA 6+608 RT (1 QR)~~
~~STA 6+618 RT (1 QR)~~
~~STA 6+641 RT (1 QR)~~
~~STA 6+848 RT (1 FP)~~
~~STA 6+855 RT (1 FP)~~
~~STA 6+884 RT (1 FP)~~
~~STA 6+873 RT (1 FP)~~
~~STA 6+682 RT (1 FP)~~
~~STA 6+690 RT (1 FP)~~
~~STA 6+700 RT (1 FP)~~
~~STA 6+709 RT (1 FP)~~
~~STA 6+718 RT (1 FP)~~
~~STA 23+020 LT (1 QR)~~

~~GROUND COVER AND VINES~~
~~STA 6+577 TO STA 6+621 RT~~
STA 6+640 TO STA 6+680 RT 110 HH
STA 6+645 TO STA 6+660 RT 88 HF

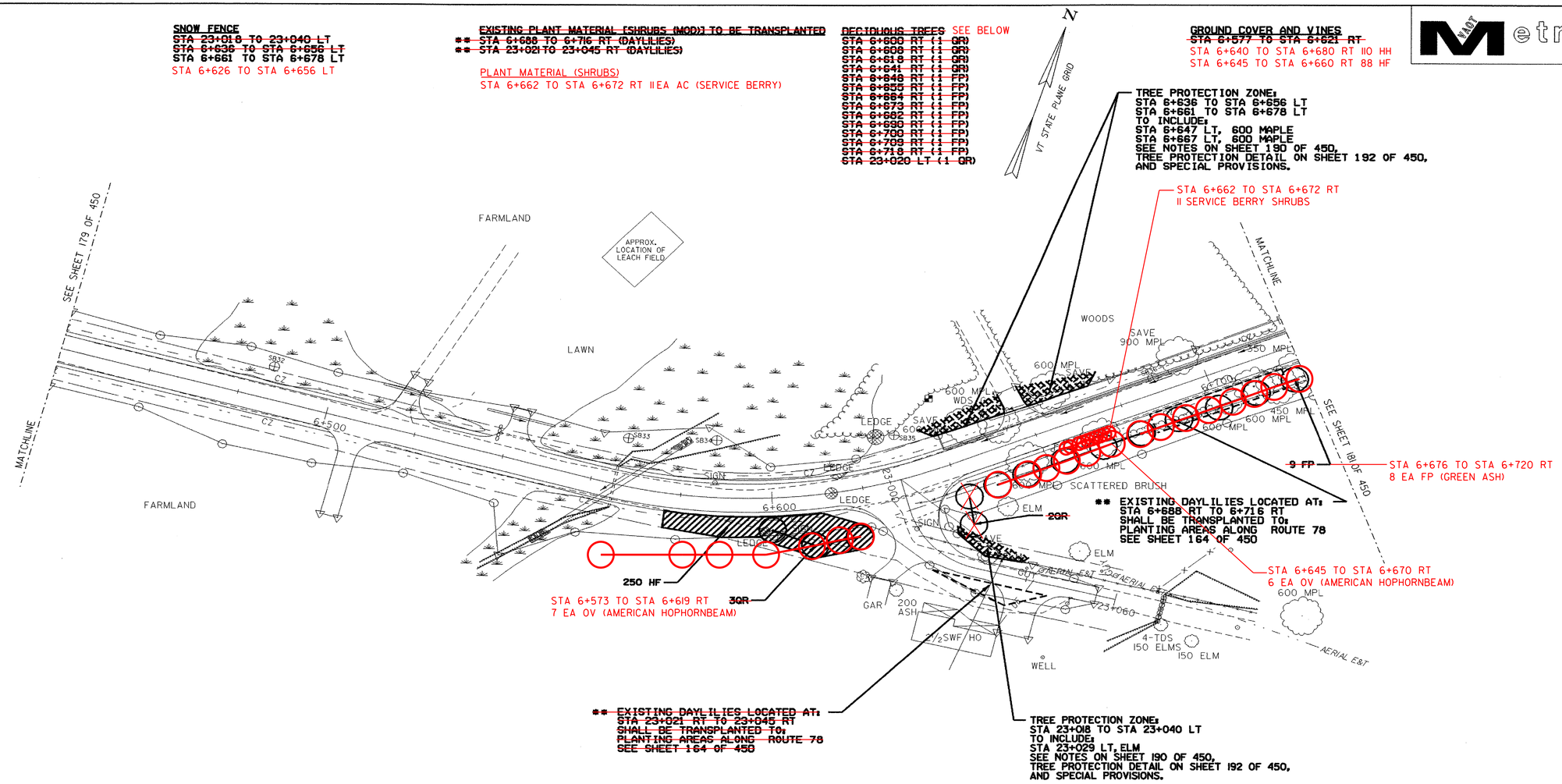

LEGEND

- DIRECTION OF DITCH FLOW
- PROPOSED TREE
- EXISTING TREES
- PROPOSED SHRUB
- PROPOSED GROUND COVER
- NEW LOCATION FOR TRANSPLANTED MATERIAL
- EXISTING PLANT MATERIAL TO BE TRANSPLANTED
- TREE PROTECTION ZONE WITH FENCING
- LIMIT OF CUT
- LIMIT OF FILL

DECIDUOUS TREES
STA 6+573 RT (1 OV)
STA 6+580 RT (1 OV)
STA 6+587 RT (1 OV)
STA 6+595 RT (1 OV)
STA 6+603 RT (1 OV)
STA 6+611 RT (1 OV)
STA 6+619 RT (1 OV)

STA 6+645 RT (1 OV)
STA 6+649 RT (1 OV)
STA 6+653 RT (1 OV)
STA 6+657 RT (1 OV)
STA 6+661 RT (1 OV)
STA 6+670 RT (1 OV)

STA 6+676 RT (1 FP)
STA 6+682 RT (1 FP)
STA 6+687 RT (1 FP)
STA 6+692 RT (1 FP)
STA 6+699 RT (1 FP)
STA 6+706 RT (1 FP)
STA 6+712 RT (1 FP)
STA 6+718 RT (1 FP)

LANDSCAPE PLAN

0 10 20 30
1:500

PROJECT NAME:	HIGHGATE - FRANKLIN
PROJECT NUMBER:	STP RS 0301(1) SA
FILE NAME: 85c060/design/dc060landbdr.dgn	PLOT DATE: 09-MAY-2005
PROJECT LEADER: DELLASANTA	DRAWN BY: SQUAD B
DESIGNED BY: SQUAD B	CHECKED BY: SQUAD B
IPARM FILE NAME: dc060landl7.i	SHEET 180 OF 450

SNOW FENCE
STA 6+952 TO STA 7+001 LT

DECIDUOUS TREES
~~STA 6+733 LT (1 BP)~~
~~STA 6+745 LT (1 BP)~~
~~STA 6+755 LT (1 BP)~~
~~STA 6+790 LT (1 BP)~~
~~STA 6+796 LT (1 BP)~~
~~STA 6+802 LT (1 BP)~~
~~STA 6+808 LT (1 BP)~~
~~STA 6+814 LT (1 BP)~~
~~STA 6+726 RT (1 FP)~~
~~STA 6+735 RT (1 FP)~~
~~STA 6+745 RT (1 OV)~~
~~STA 6+754 RT (1 OV)~~
~~STA 6+765 RT (1 OV)~~
~~STA 6+775 RT (1 BP)~~
~~STA 6+823 RT (1 BP)~~
~~STA 6+836 RT (1 BP)~~
STA 6+724 RT (1FP)
STA 6+730 RT (1FP)
STA 6+735 RT (1FP)

STA 6+742 RT (1OV)
STA 6+747 RT (1OV)
STA 6+752 RT (1OV)
STA 6+757 RT (1OV)
STA 6+762 RT (1OV)

STA 6+775 RT (1BP)

DECIDUOUS SHRUBS
~~STA 6+840 RT (1VP)~~
~~STA 6+844 RT (1VP)~~
~~STA 6+848 RT (1VP)~~

VT STATE PLANE GRID

TREE PROTECTION ZONE:
STA 6+952 TO STA 7+001 LT
TO INCLUDE:
STA 6+963 LT, 900 MAPLE
STA 6+970 LT, 450 MAPLE
STA 6+990 LT, 600 MAPLE
SEE NOTES ON SHEET 190 OF 450,
TREE PROTECTION DETAIL ON SHEET 192 OF 450,
AND SPECIAL PROVISIONS.

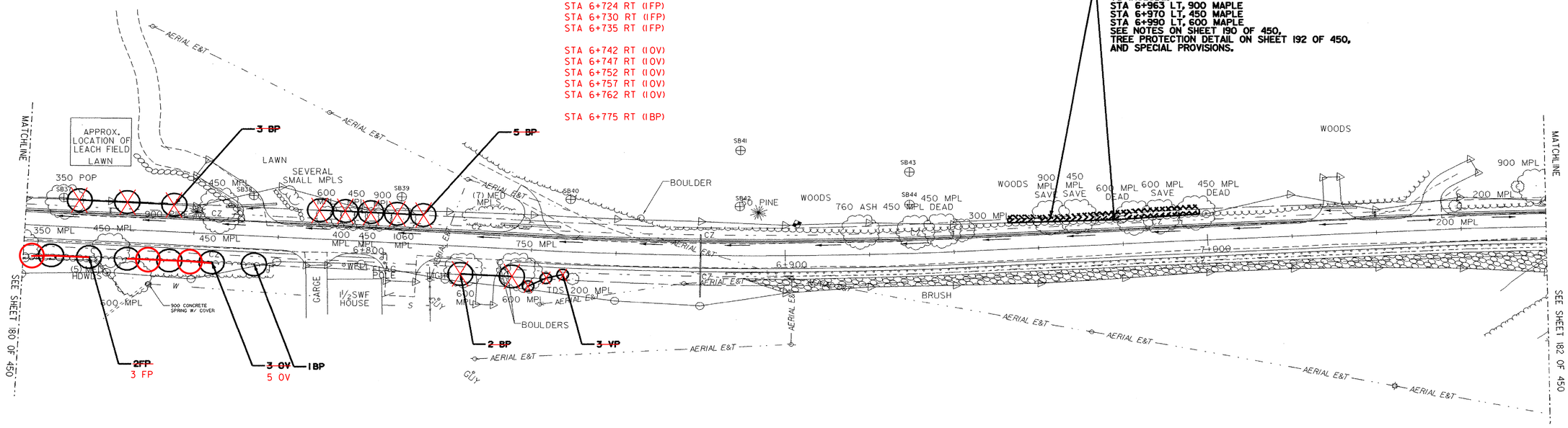

LEGEND

- DIRECTION OF DITCH FLOW
- PROPOSED TREE
- EXISTING TREES
- PROPOSED SHRUB
- PROPOSED GROUND COVER
- NEW LOCATION FOR TRANSPLANTED MATERIAL
- EXISTING PLANT MATERIAL TO BE TRANSPLANTED
- TREE PROTECTION ZONE WITH FENCING
- LIMIT OF CUT
- LIMIT OF FILL

LANDSCAPE PLAN
0 10 20 30
1:500

PROJECT NAME:	HIGHGATE - FRANKLIN
PROJECT NUMBER:	STP RS 0301(I)SA
FILE NAME:85c060/design/dc060landbdr.dgn	PLOT DATE: 09-MAY-2005
PROJECT LEADER: DELLASANTA	DRAWN BY: SQUAD B
DESIGNED BY: SQUAD B	CHECKED BY: SQUAD B
IPARM FILE NAME: dc060landl8.i	SHEET 181 OF 450

VAOT Metric

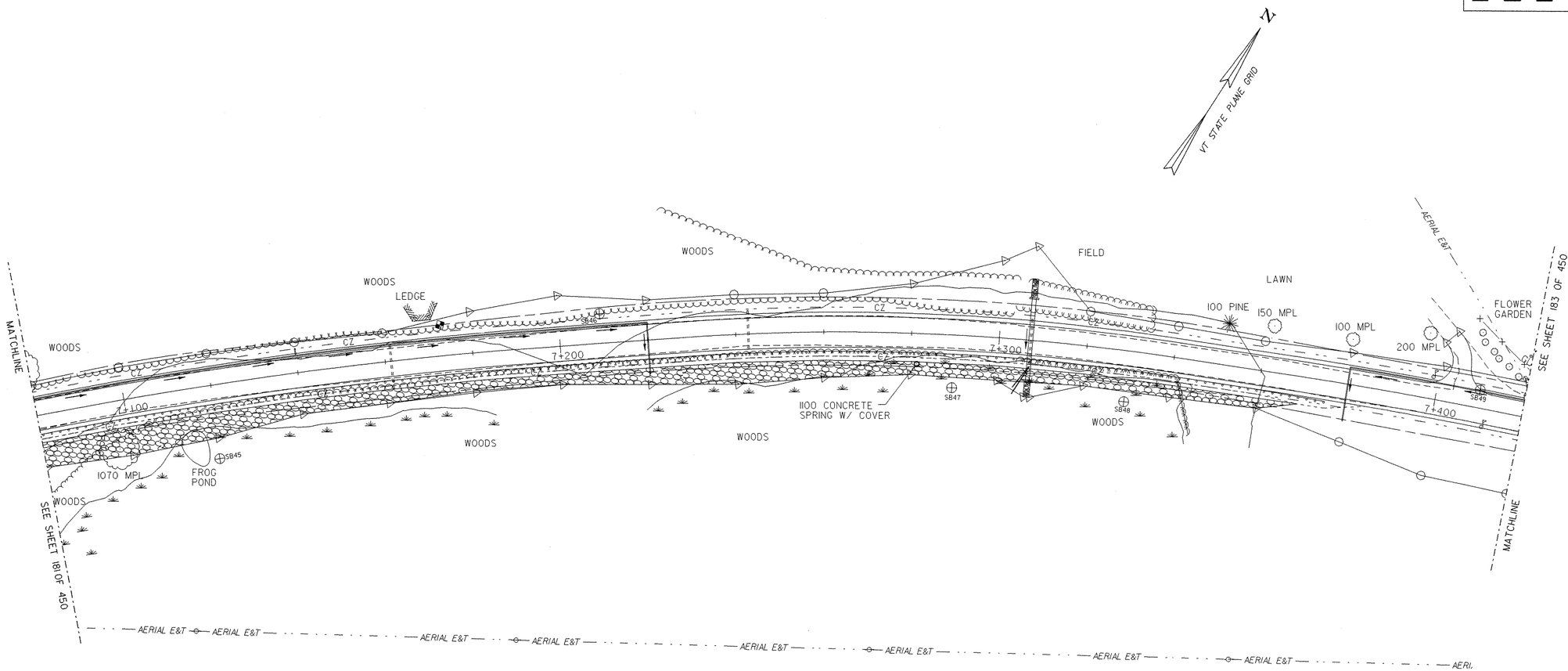

LEGEND

- DIRECTION OF DITCH FLOW
- PROPOSED TREE
- EXISTING TREES
- PROPOSED SHRUB
- PROPOSED GROUND COVER
- NEW LOCATION FOR TRANSPLANTED MATERIAL
- EXISTING PLANT MATERIAL TO BE TRANSPLANTED
- TREE PROTECTION ZONE WITH FENCING
- LIMIT OF CUT
- LIMIT OF FILL

LANDSCAPE PLAN

0 10 20 30
1:500

PROJECT NAME:	HIGHGATE - FRANKLIN
PROJECT NUMBER:	STP RS 0301(1) SA
FILE NAME:85c060/design/dc060landbdr.dgn	PLOT DATE: 09-MAY-2005
PROJECT LEADER: DELLASANTA	DRAWN BY: SQUAD B
DESIGNED BY: SQUAD B	CHECKED BY: SQUAD B
IPARM FILE NAME: dc060land19.i	SHEET 182 OF 450

DECIDUOUS TREES
~~STA 7+451 LT (1 OV)~~
~~STA 7+478 LT (1 OV)~~
~~STA 7+513 LT (1 OV)~~
~~STA 7+524 LT (1 OV)~~
~~STA 7+550 LT (1 OV)~~
~~STA 7+560 LT (1 OV)~~
~~STA 7+577 LT (1 OV)~~
~~STA 7+585 LT (1 OV)~~
~~STA 7+595 LT (1 OV)~~
~~STA 7+635 LT (1 ARN)~~

DECIDUOUS SHRUBS
~~STA 7+456 LT (1 VP)~~
~~STA 7+461 LT (1 VP)~~
~~STA 7+466 LT (1 VP)~~
~~STA 7+471 LT (1 VP)~~
~~STA 7+481 LT (1 AC)~~
~~STA 7+484 LT (1 AC)~~
~~STA 7+486 LT (1 AC)~~
~~STA 7+488 LT (1 AC)~~
~~STA 7+491 LT (1 AC)~~
~~STA 7+508 LT (1 AC)~~
~~STA 7+511 LT (1 AC)~~
~~STA 7+514 LT (1 AC)~~
~~STA 7+529 LT (1 VP)~~
~~STA 7+531 LT (1 VP)~~
~~STA 7+534 LT (1 VP)~~
~~STA 7+544 LT (1 VP)~~
STA 7+440 LT (1SV)
STA 7+441 LT (1SV)
STA 7+442 LT (1SV)
STA 7+443 LT (1SV)
STA 7+444 LT (1SV)

DECIDUOUS SHRUBS
~~STA 7+546 LT (1 VP)~~
~~STA 7+566 LT (1 AC)~~
~~STA 7+569 LT (1 AC)~~
~~STA 7+572 LT (1 AC)~~
~~STA 7+581 LT (1 VP)~~
~~STA 7+591 LT (1 VP)~~
~~STA 7+602 LT (1 VP)~~
~~STA 7+604 LT (1 VP)~~
~~STA 7+607 LT (1 VP)~~
~~STA 7+609 LT (1 VP)~~
~~STA 7+612 LT (1 VP)~~
~~STA 7+624 LT (1 SV)~~
~~STA 7+627 LT (1 SV)~~
~~STA 7+630 LT (1 SV)~~
~~STA 7+643 LT (1 SV)~~
~~STA 7+646 LT (1 SV)~~

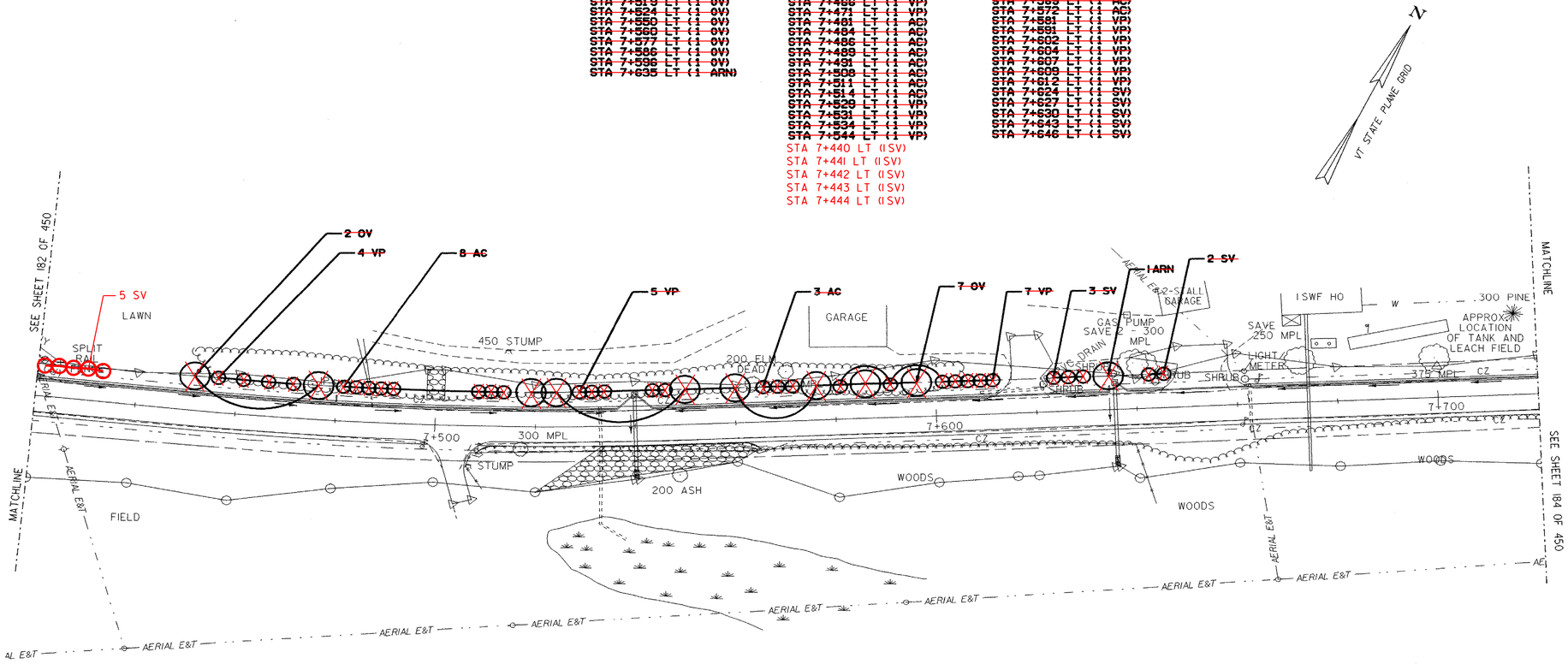

LEGEND

- DIRECTION OF DITCH FLOW
- PROPOSED TREE
- EXISTING TREES
- PROPOSED SHRUB
- PROPOSED GROUND COVER
- NEW LOCATION FOR TRANSPLANTED MATERIAL
- EXISTING PLANT MATERIAL TO BE TRANSPLANTED
- TREE PROTECTION ZONE WITH FENCING
- LIMIT OF CUT
- LIMIT OF FILL

LANDSCAPE PLAN

0 10 20 30
1:500

PROJECT NAME: HIGHGATE - FRANKLIN
PROJECT NUMBER: STP RS 0301(1) SA

FILE NAME:85c060/design/dc060landbdr.dgn PLOT DATE: 09-MAY-2005
PROJECT LEADER: DELLASANTA DRAWN BY: SQUAD B
DESIGNED BY: SQUAD B CHECKED BY: SQUAD B
IPARM FILE NAME: dc060land20.i SHEET 183 OF 450

~~SNOW FENCE~~
~~STA 7+809 TO STA 7+823 LT~~
~~STA 7+849 TO STA 7+871 LT~~

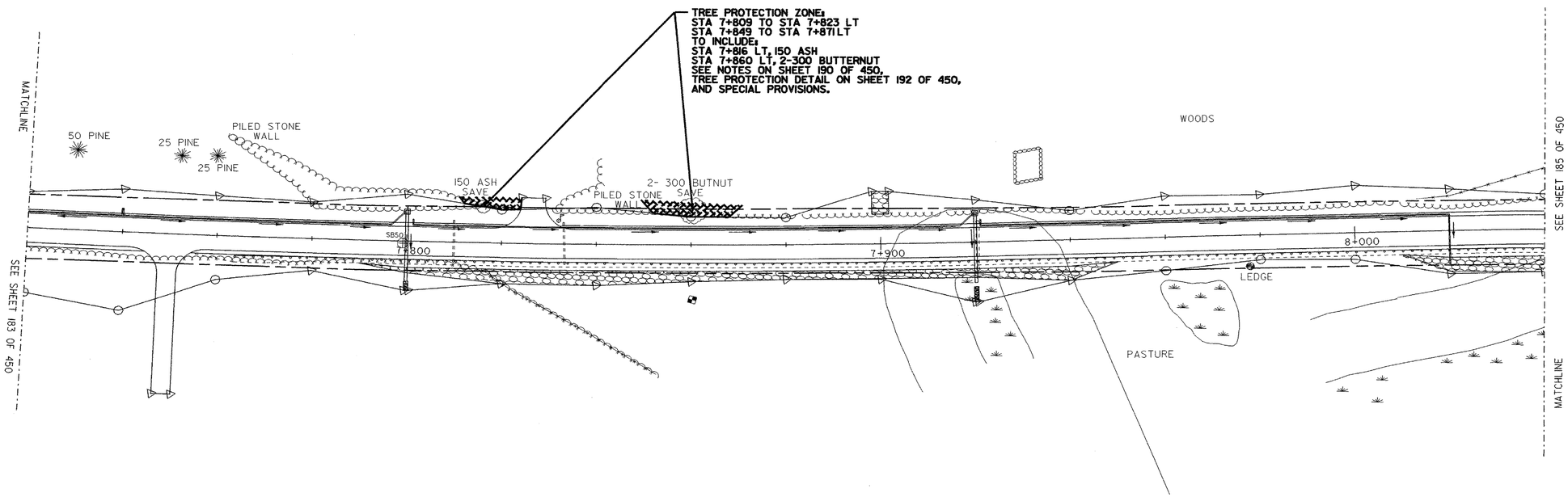

N

VT STATE PLANE GRID

LEGEND

- DIRECTION OF DITCH FLOW
- PROPOSED TREE
- EXISTING TREES
- PROPOSED SHRUB
- PROPOSED GROUND COVER
- NEW LOCATION FOR TRANSPLANTED MATERIAL
- EXISTING PLANT MATERIAL TO BE TRANSPLANTED
- TREE PROTECTION ZONE WITH FENCING
- LIMIT OF CUT
- LIMIT OF FILL

LANDSCAPE PLAN

0 10 20 30
1:500

PROJECT NAME:	HIGHGATE - FRANKLIN
PROJECT NUMBER:	STP RS 0301(I) SA
FILE NAME:85c060/design/dc060landbdr.dgn	PLOT DATE: 09-MAY-2005
PROJECT LEADER: DELLASANTA	DRAWN BY: SQUAD B
DESIGNED BY: SQUAD B	CHECKED BY: SQUAD B
IPARM FILE NAME: dc060land2l.i	SHEET 184 OF 450

~~SNOW FENCE~~
~~STA 8+213 TO REV STA 8+303 LT~~
~~REV STA 8+315 TO REV STA 8+339.723 LT~~

~~DECIDUOUS TREES~~
~~STA 8+072 LT (1 BP)~~
~~STA 8+077 LT (1 BP)~~
~~STA 8+104 LT (1 BP)~~
STA 8+070 LT (1BP)
STA 8+075 LT (1BP)
STA 8+080 LT (1BP)
STA 8+075 LT (1OV)
STA 8+080 LT (1OV)
STA 8+085 LT (1OV)

~~DECIDUOUS SHRUBS~~
~~STA 8+089 LT (1VP)~~
~~STA 8+092 LT (1VP)~~
~~STA 8+092 LT (1VP)~~
~~STA 8+096 LT (1VP)~~
~~STA 8+098 LT (1VP)~~

N
VT STATE PLANE GRID

TREE PROTECTION ZONE:
STA 8+213 TO REV STA 8+303 LT
REV STA 8+315 TO REV STA 8+339.723 LT
TO INCLUDE: ALL TREES
SEE NOTES ON SHEET 190 OF 450.
TREE PROTECTION DETAIL ON SHEET 192 OF 450,
AND SPECIAL PROVISIONS.

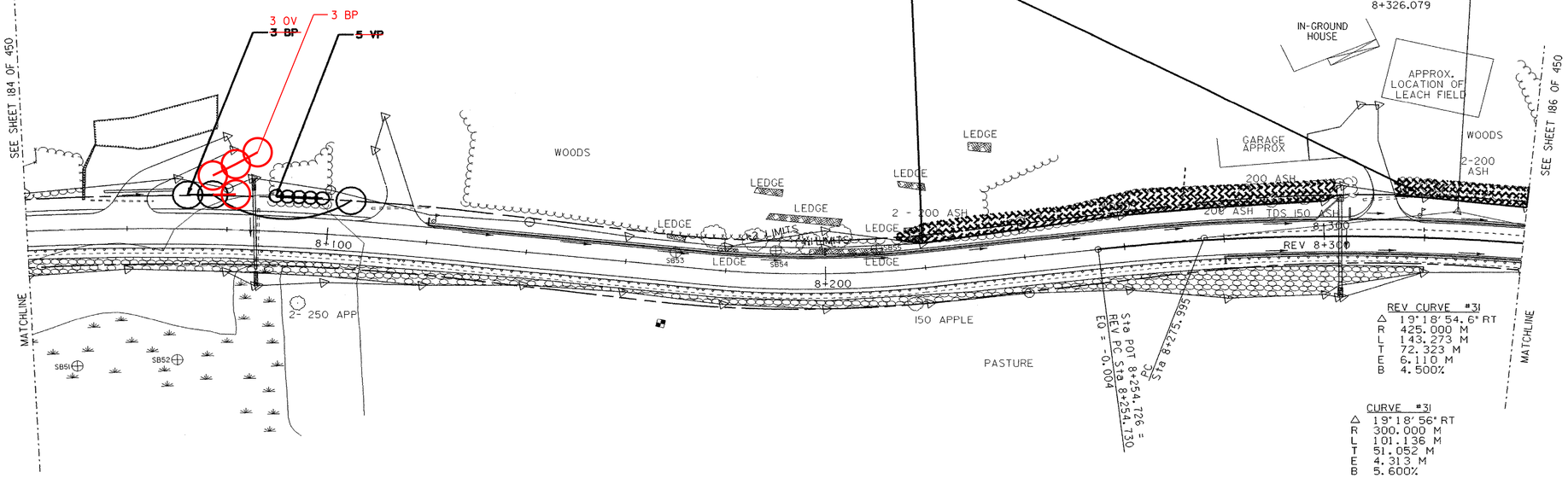

REV CURVE #3I
Δ 19°18'54.6" RT
R 425.000 M
L 143.273 M
T 72.323 M
E 6.110 M
B 4.500%

CURVE #3I
Δ 19°18'56" RT
R 300.000 M
L 101.136 M
T 51.052 M
E 4.313 M
B 5.600%

LEGEND

- DIRECTION OF DITCH FLOW
- PROPOSED TREE
- EXISTING TREES
- PROPOSED SHRUB
- PROPOSED GROUND COVER
- NEW LOCATION FOR TRANSPLANTED MATERIAL
- EXISTING PLANT MATERIAL TO BE TRANSPLANTED
- TREE PROTECTION ZONE WITH FENCING
- LIMIT OF CUT
- LIMIT OF FILL

LANDSCAPE PLAN

0 10 20 30
1:500

PROJECT NAME:	HIGHGATE - FRANKLIN
PROJECT NUMBER:	STP RS 0301(I) SA
FILE NAME:85c060/design/dc060landbdr.dgnPLOT DATE:	09-MAY-2005
PROJECT LEADER: DELLASANTA	DRAWN BY: SQUAD B
DESIGNED BY: SQUAD B	CHECKED BY: SQUAD B
IPARM FILE NAME: dc060land22.1	SHEET 185 OF 450

~~SNOW FENCE~~
~~REV STA 8+339.723 TO REV STA 8+350 LT~~
~~REV STA 8+355 TO REV STA 8+372 LT~~
~~STA 8+561 TO STA 8+579 LT~~
~~STA 8+590 TO STA 8+631 LT~~

TREE PROTECTION ZONE:
STA 8+561 TO STA 8+579 LT
STA 8+590 TO STA 8+631 LT
TO INCLUDE:
STA 8+572 LT, 750 MAPLE
STA 8+593 LT, 750 MAPLE
STA 8+598 LT, 750 MAPLE
STA 8+608 LT, 2-100 MAPLES
STA 8+620 LT, 750 MAPLE
SEE NOTES ON SHEET 190 OF 450.
TREE PROTECTION DETAIL ON SHEET 192 OF 450,
AND SPECIAL PROVISIONS.

TREE PROTECTION ZONE:
REV STA 8+339.723 TO REV STA 8+350 LT
REV STA 8+355 TO REV STA 8+372 LT
TO INCLUDE: ALL TREES
SEE NOTES ON SHEET 190 OF 450,
TREE PROTECTION DETAIL ON SHEET 192 OF 450,
AND SPECIAL PROVISIONS.

N
VT STATE PLANE GRID

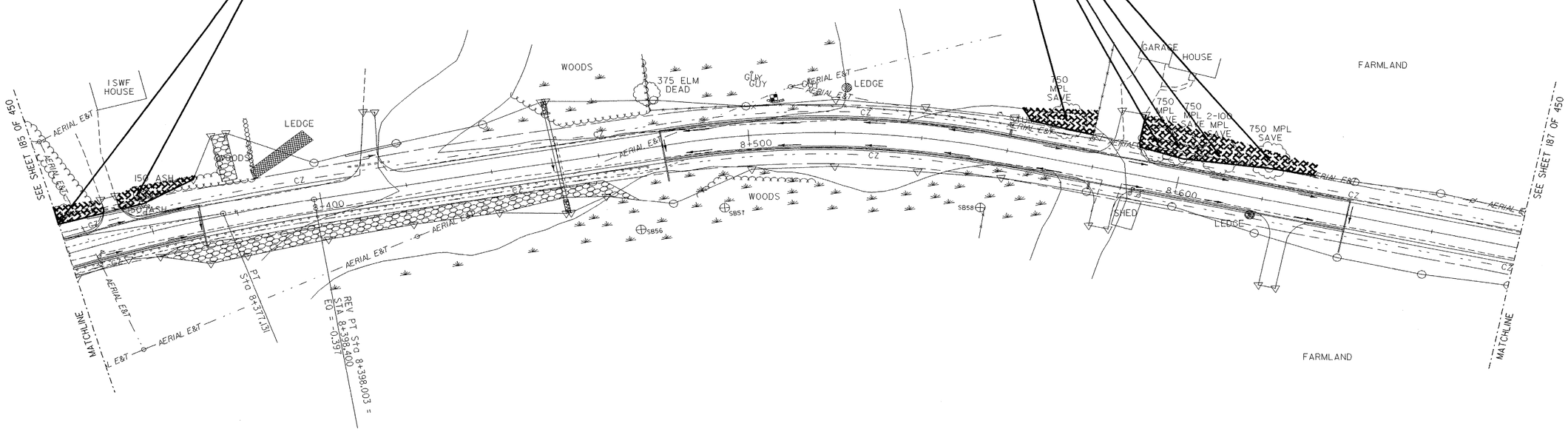

LEGEND

- DIRECTION OF DITCH FLOW
- PROPOSED TREE
- EXISTING TREES
- PROPOSED SHRUB
- PROPOSED GROUND COVER
- NEW LOCATION FOR TRANSPLANTED MATERIAL
- EXISTING PLANT MATERIAL TO BE TRANSPLANTED
- TREE PROTECTION ZONE WITH FENCING
- LIMIT OF CUT
- LIMIT OF FILL

LANDSCAPE PLAN

0 10 20 30
1:500

PROJECT NAME:	HIGHGATE - FRANKLIN
PROJECT NUMBER:	STP RS 0301(1) SA
FILE NAME:85c060/design/dc060landbdr.dgn	PLOT DATE: 09-MAY-2005
PROJECT LEADER: DELLASANTA	DRAWN BY: SQUAD B
DESIGNED BY: SQUAD B	CHECKED BY: SQUAD B
IPARM FILE NAME: dc060land23.i	SHEET 186 OF 450

N

VT STATE PLANE GRID

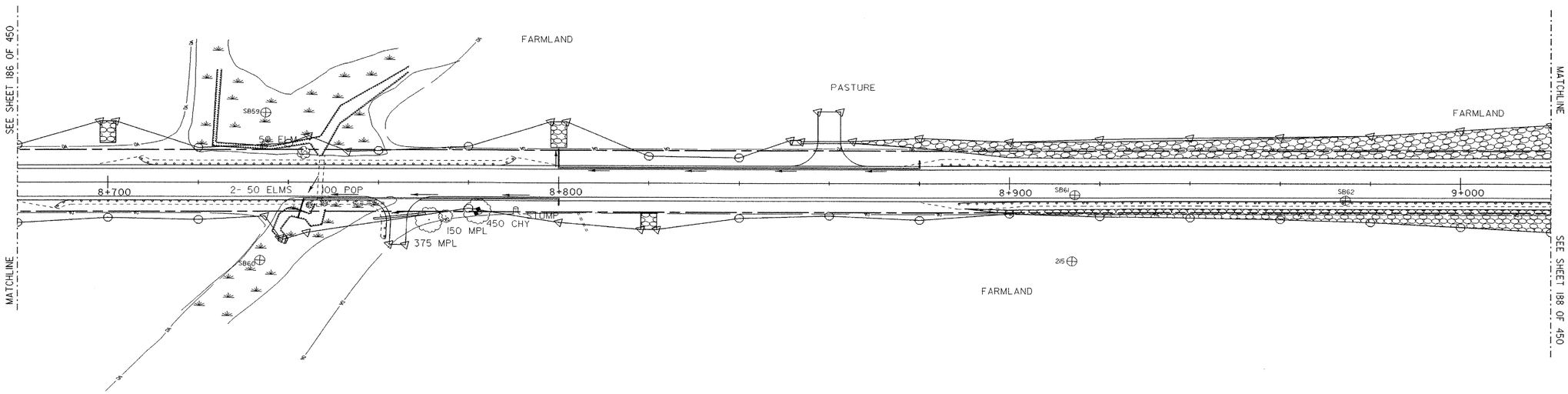

LEGEND

- DIRECTION OF DITCH FLOW
- PROPOSED TREE
- EXISTING TREES
- PROPOSED SHRUB
- PROPOSED GROUND COVER
- NEW LOCATION FOR TRANSPLANTED MATERIAL
- EXISTING PLANT MATERIAL TO BE TRANSPLANTED
- TREE PROTECTION ZONE WITH FENCING
- LIMIT OF CUT
- LIMIT OF FILL

LANDSCAPE PLAN

0 10 20 30

1:500

PROJECT NAME:	HIGHGATE - FRANKLIN
PROJECT NUMBER:	STP RS 0301(1) SA
FILE NAME:85c060/design/dc060landbdr.dgn	PLOT DATE: 09-MAY-2005
PROJECT LEADER: DELLASANTA	DRAWN BY: SQUAD B
DESIGNED BY: SQUAD B	CHECKED BY: SQUAD B
IPARM FILE NAME: dc060land24.I	SHEET 187 OF 450

DECIDUOUS TREES
~~STA 8+240 LT (1 UAP)~~
~~STA 25+015 LT (1 FP)~~
~~STA 9+273 LT (1 UAP)~~
~~STA 9+281 LT (1 UAP)~~
~~STA 9+280 LT (2 ARN)~~
STA 9+220 LT (1 OR)
STA 9+220 RT (1 OV)
STA 9+226 RT (1 OV)
STA 9+232 RT (1 OV)
STA 9+240 RT (1 FP)

GROUND COVER AND VINES
~~STA 9+124 TO 9+161 RT (320 LP)~~
~~STA 9+182 TO 24+045 RT (260 HF)~~
~~STA 9+193 TO 9+231 LT (200 HF)~~
STA 9+138 TO STA 9+202 RT (320 LP)
STA 9+138 TO STA 9+180 RT (137 HF)

SNOW FENCE
~~STA 24+031 TO STA 24+054 LT~~
~~STA 25+014 TO STA 25+041 LT~~
~~STA 9+293 TO AH STA 14+658 LT~~
STA 24+034 TO STA 24+048 LT
STA 25+014 TO STA 25+032 LT
STA 9+295 TO AH STA 14+658 LT

N
VT STATE PLANE GRID

MATCHLINE
SEE SHEET 187 OF 450

LEDGE
LEDGE
586.3
HUB
216
NAIL 2.3 m BOULDER
586.4
NAIL 2.3 m BOULDER
HUB
100

TREE PROTECTION ZONE:
STA 9+293 TO STA AH 14+658 LT
TO INCLUDE:
STA 9+304 LT, 750 MAPLE
SEE NOTES ON SHEET 190 OF 450,
TREE PROTECTION DETAIL ON SHEET 192 OF 450,
AND SPECIAL PROVISIONS.

POE STA 9+306.288 =
EQ - STA OF AH 650.000
POB STA OF AH 643.712

MATCHLINE
SEE SHEET 189 OF 450

2 ARN
2 UAP
1 UAP
200 HF
1 OR
2-300 ELM
GAR
900 MPL
750 MPL
900 MPL
1½SWF HOUSE
GAR
TRIPLE TIE SAVE
SIGN
300 ASH
SIGN
50 POP
AERIAL E&T
GUY
137 HF
320 LP
320 LP
260 HF
9+200
SIGN
GIP
AERIAL E&T
1 FP
3 OV
1 FP
TH = 37
24+060
SIGN
600 MPL SAVE
100 ELM SAVE
AERIAL E&T
AERIAL E&T
AERIAL E&T
GUY
150 ASH SAVE
150 ASH SAVE
1500 MPL SAVE
METER
TH = 12
1½SWF HOUSE
WDS 750 MPL
MPL
SIGN
150 ELM
50 APP
2-100 APP
100 POP
CONC NAIL IN BOULDER
HUB
450 ASH
2 SWF HOUSE
WELL
300 APP
AERIAL E&T
GUY
150 BASS
150 ELM
150 ELM

TREE PROTECTION ZONE:
STA 24+031 TO STA 24+054 LT
TO INCLUDE:
STA 24+038 LT, 100 ELM
STA 24+043 LT, 600 MAPLE
SEE NOTES ON SHEET 190 OF 450,
TREE PROTECTION DETAIL ON SHEET 192 OF 450,
AND SPECIAL PROVISIONS.

TREE PROTECTION ZONE:
STA 25+014 TO STA 25+041 LT
TO INCLUDE:
STA 25+021 LT, 50 ASH
STA 25+024 LT, 50 ASH
STA 25+030 LT, 600 MAPLE
SEE NOTES ON SHEET 190 OF 450,
TREE PROTECTION DETAIL ON SHEET 192 OF 450,
AND SPECIAL PROVISIONS.

LEGEND

- DIRECTION OF DITCH FLOW
- PROPOSED TREE
- EXISTING TREES
- PROPOSED SHRUB
- PROPOSED GROUND COVER
- NEW LOCATION FOR TRANSPLANTED MATERIAL
- EXISTING PLANT MATERIAL TO BE TRANSPLANTED
- TREE PROTECTION ZONE WITH FENCING
- LIMIT OF CUT
- LIMIT OF FILL

LANDSCAPE PLAN

0 10 20 30
1:500

PROJECT NAME:	HIGHGATE - FRANKLIN
PROJECT NUMBER:	STP RS 0301(1) SA
FILE NAME:85c060/design/dc060landbdr.dgn	PLOT DATE: 09-MAY-2005
PROJECT LEADER: DELLASANTA	DRAWN BY: SQUAD B
DESIGNED BY: SQUAD B	CHECKED BY: SQUAD B
IPARM FILE NAME: dc060land25.i	SHEET 188 OF 450

SNOW FENCE
~~AH STA 14+863 TO AH STA 14+893 RT~~
~~AH STA 14+895 TO AH STA 14+925 RT~~
AH STA 14+867 TO AH STA 14+892 RT
AH STA 14+899 TO AH STA 14+922 RT

DECIDUOUS TREES
~~AH STA 14+728 RT (1 QR)~~
~~AH STA 14+753 RT (1 QR)~~
~~AH STA 14+778 RT (1 QR)~~
~~AH STA 14+804 RT (1 QR)~~
~~AH STA 14+828 RT (1 QR)~~

VAOT Metric

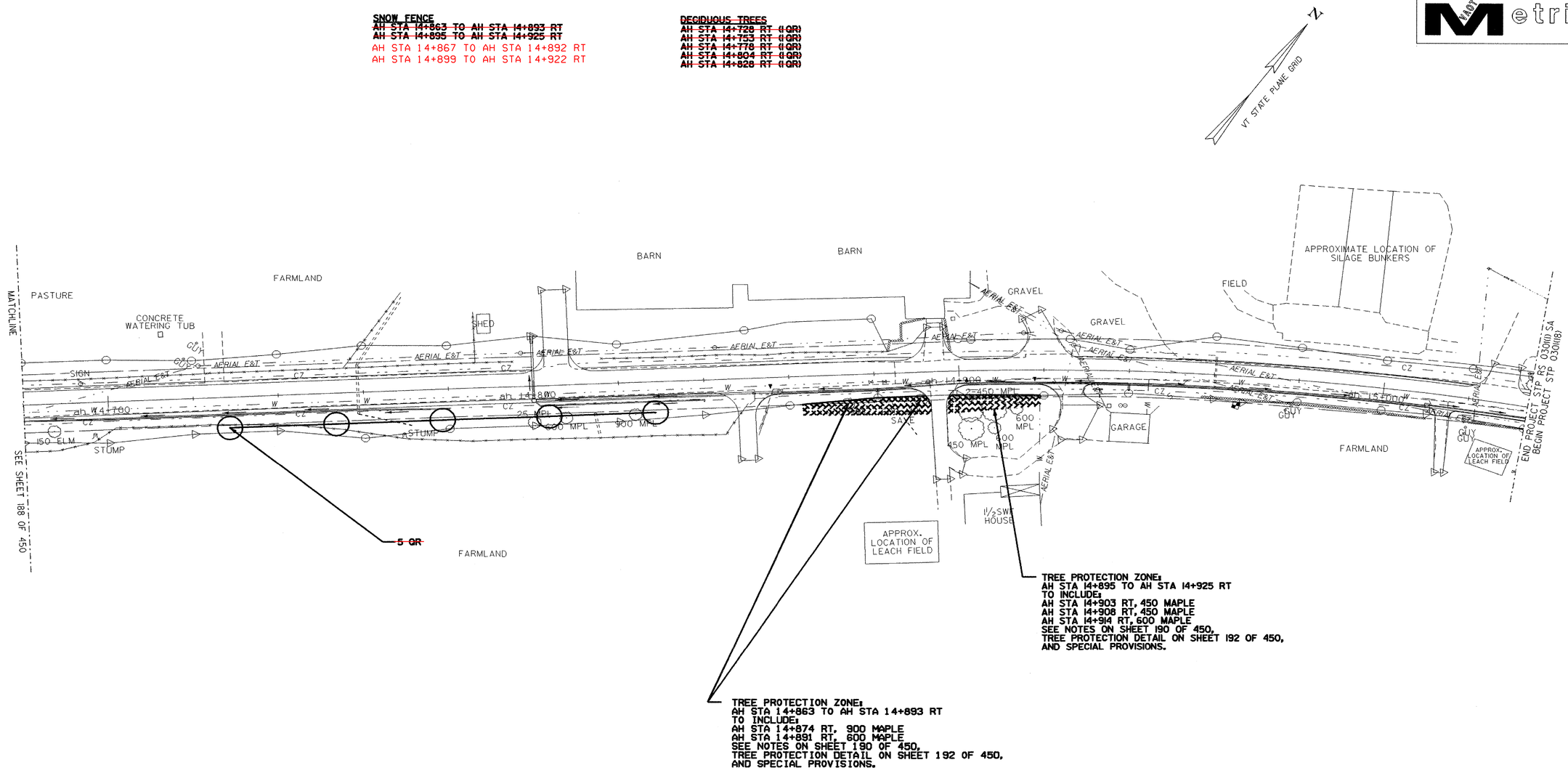

LEGEND

- DIRECTION OF DITCH FLOW
- PROPOSED TREE
- EXISTING TREES
- PROPOSED SHRUB
- PROPOSED GROUND COVER
- NEW LOCATION FOR TRANSPLANTED MATERIAL
- EXISTING PLANT MATERIAL TO BE TRANSPLANTED
- TREE PROTECTION ZONE WITH FENCING
- LIMIT OF CUT
- LIMIT OF FILL

LANDSCAPE PLAN

0 10 20 30
1:500

PROJECT NAME:	HIGHGATE - FRANKLIN
PROJECT NUMBER:	STP RS 0301(I) SA
FILE NAME: 85c060/design/dc060landbdr.dgn	PLOT DATE: 09-MAY-2005
PROJECT LEADER: DELLASANTA	DRAWN BY: SQUAD B
DESIGNED BY: SQUAD B	CHECKED BY: SQUAD B
IPARM FILE NAME: dc060land26.i	SHEET 189 OF 450

TREE PROTECTION NOTES:

Metric

THE FOLLOWING SIGNIFICANT TREES WITHIN THE R.O.W. ARE INDICATED TO BE SAVED:

SHEET NO.:	STATION:	TREES:
SHEET 168	2+593 RT	900 MAPLE
SHEET 173	4+259 LT	400 MAPLE
	4+280 LT	450 MAPLE
	4+291 LT	100 MAPLE
SHEET 175	4+919 LT	CONIFEROUS
	4+923 LT	DECIDOUS
	4+928 LT	CONIFEROUS
	4+948 LT	450 MAPLE
	4+955 LT	CONIFEROUS
	4+967 LT	CONIFEROUS
	4+973 LT	CONIFEROUS
	4+977 LT	CONIFEROUS
	4+983 LT	CONIFEROUS
SHEET 177	21+006 LT	600 MAPLE
	21+012 LT	750 MAPLE
	21+017 LT	600 MAPLE
	21+025 LT	1100 MAPLE
	5+524 RT	450 MAPLE
	5+527 RT	750 MAPLE
	5+532 RT	900 MAPLE
	5+585 LT	750 MAPLE
	5+587 LT	750 MAPLE
	5+587 RT	750 MAPLE
SHEET 180	6+647 LT	600 MAPLE
	6+667 LT	600 MAPLE
	23+029 LT	ELM
SHEET 181	6+963 LT	900 MAPLE
	6+970 LT	450 MAPLE
	6+990 LT	600 MAPLE
SHEET 184	7+816 LT	150 ASH
	7+860 LT	2-(300) BUTTERNUT
SHEET 185	8+213 TO REV 8+303 LT	ALL TREES
	REV 8+315 TO REV 8+339.723 LT	ALL TREES
SHEET 186	REV 8+339.723 TO REV 8+350 LT	ALL TREES
	REV 8+355 TO 8+372 LT	ALL TREES
	8+572 LT	750 MAPLE
	8+593 LT	750 MAPLE
	8+598 LT	750 MAPLE
	8+608 LT	2-(100) MAPLES
	8+620 LT	750 MAPLE
SHEET 188	24+038 LT	100 ELM
	24+043 LT	600 MAPLE
	25+021 LT	50 ASH
	25+024 LT	50 ASH
	25+030 LT	600 MAPLE
	9+304 LT	750 MAPLE
SHEET 189	AH 14+874 RT	900 MAPLE
	AH 14+891 RT	600 MAPLE
	AH 14+903 RT	450 MAPLE
	AH 14+908 RT	450 MAPLE
	AH 14+914 RT	600 MAPLE

1. DURING CONSTRUCTION: PROTECT TREES TO BE SAVED BY ERECTING ORANGE SNOW FENCE JUST AT LIMIT OF CONSTRUCTION AS INDICATED (PLEASE SEE LANDSCAPE PLANS AND TREE PROTECTION DETAIL). INSTALL SIGNAGE AT EACH PROTECTION ZONE WHICH CLEARLY READS: "TREES ARE BEING PROTECTED. NO UNAUTHORIZED TRESPASS IS ALLOWED".

2. AVOID CUTTING ROOTS OF TREES WHENEVER POSSIBLE. WHEN AVOIDANCE IS NOT POSSIBLE, CUT ROOTS FLUSH (SAW THOSE ROOTS GREATER THAN 25 MM WIDE), WHICH WILL ENCOURAGE NEW ROOT GROWTH. DO NOT RIP ROOTS WITH EXCAVATOR OR OTHER HEAVY EQUIPMENT.

3. BACKFILL AS SOON AS POSSIBLE; KEEP ROOT ENDS MOIST WITH WET BURLAP OR SIMILAR MATERIAL UNTIL ABLE TO BACKFILL. ADD A ROOT STIMULATOR SUCH AS MYCORRHIZAL FUNGI PER MANUFACTURER'S INSTRUCTIONS, AND WATER (PER APPROVED WATERING SPECIFICATIONS) THE ENTIRE BACKFILL AREA WITHIN 24 HOURS.

4. NO EXCAVATED OR BACKFILL MATERIAL SHALL BE PILED IN TREE PROTECTION ZONE; NO EQUIPMENT SHALL BE STORED OR PILED IN TREE PROTECTION ZONE.

5. IF A PROTECTED TREE IS DAMAGED DUE TO THE CONTRACTOR'S NEGLIGENCE AND IS NOT REPAIRABLE (AS DETERMINED BY THE ENGINEER OR VAOT LANDSCAPE ARCHITECT), THEN THE CONTRACTOR SHALL REPLACE THE TREE (AT THE CONTRACTOR'S EXPENSE AND ACCORDING TO APPROVED PLANTING TECHNIQUES) WITH THE SAME TREE OF EQUAL VALUE, OR TWO OR MORE TREES WITH A TOTAL VALUE EQUAL TO THAT OF THE DAMAGED TREE. IN ADDITION, WITH THE EXCEPTION OF FENCING, ALL TREE PROTECTION MEASURES, ROOT PRUNING, AND OTHER MATERIALS WILL NOT BE PAID SEPARATELY, BUT WILL BE CONSIDERED INCIDENTAL TO ALL OTHER LANDSCAPING CONTRACT ITEMS.

PROJECT NAME: HIGHGATE - FRANKLIN
PROJECT NUMBER: STP RS 0301(I) SA

FILE NAME:85c060/design/dc060landdet.dgnPLOT DATE: 09-MAY-2005
PROJECT LEADER: DELLASANTA DRAWN BY: SQUAD B
DESIGNED BY: SQAUD B CHECKED BY: SQAUD B
IPARM FILE NAME: dc060landnotes.i SHEET 190 OF 450

PLANT LIST

KEY	BOTANICAL NAME	COMMON NAME	SIZE	QTY	UNIT	ITEM#	REMARKS	SPACING
	DECIDUOUS TREES							
ARN	ACER RUBRUM 'NORTHWOOD'	NORTHWOOD RED MAPLE	40-50 mm CAL	~~3~~ 0	EA	656.30	B&B	AT STATIONS
BP	BETULA PAPYRIFERA	PAPER BIRCH (SINGLE STEM)	50-60 mm CAL	14	EA	656.30	B&B	AT STATIONS
FP	FRAXINUS PENNSYLVANICA	GREEN ASH	50-60 mm CAL	12	EA	656.30	B&B	AT STATIONS
OV	OSTRYA VIRGINIANA	AMERICAN HOPHORNBEAM	50-60 mm CAL	~~12~~ 24	EA	656.30	B&B	AT STATIONS
QR	QUERCUS RUBRA	NORTHERN RED OAK	50-60 mm CAL	~~10~~ 3	EA	656.30	B&B	AT STATIONS
UAP	ULMUS AMERICANA 'PRINCETON'	'PRINCETON' AMERICAN ELM	50-60 mm CAL	~~15~~ 0	EA	656.30	B&B	AT STATIONS
	DECIDUOUS SHRUBS							
AC	AMELANCHIER CANADENSIS	SHADBLOW SERVICEBERRY (CLUMP FORM)	.91-1.22 M HT	11	EA	656.35	B&B	AT STATIONS
VP	VIBURNUM PRUNIFOLIUM	BLACKHAW VIBURNUM	.91-1.22 M HT	~~24~~ 0	EA	656.35	B&B	AT STATIONS
SV	SYRINGA VULGARIS	LILAC	.91-1.22 M HT	5	EA	656.35	B&B/CONTAINER	AT STATIONS
	GROUND COVERS AND VINES							
HH	HEMEROCALLIS 'HYPERION'	HYPERION DAYLILY	3.79 L CONTAINER	110	EA	656.40	CONTAINER	450 mm OC
LP	LUPINUS PERENNIS	LUPINE	3.79 L CONTAINER	320	EA	656.40	CONTAINER	450 mm OC
HF	HEMEROCALLIS 'FULVA'	COMMON ORANGE DAYLILY	3.79 L CONTAINER	710	EA	656.40	CONTAINER	450 mm OC

PROJECT NAME: HIGHGATE - FRANKLIN
PROJECT NUMBER: STP RS 0301(1) SA

FILE NAME:85c060/design/dc060landdet.dgn PLOT DATE: 09-MAY-2005
PROJECT LEADER: DELLASANTA DRAWN BY: SQUAD B
DESIGNED BY: SQAUD B CHECKED BY: SQAUD B
IPARM FILE NAME: dc060landpl.i SHEET 191 OF 450

LANDSCAPE DETAILS

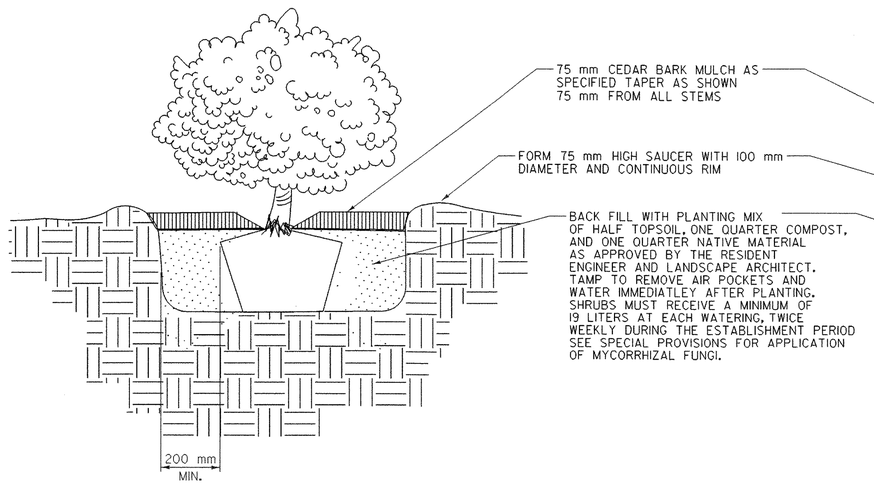

SHRUB PLANTING DETAIL
NOT TO SCALE

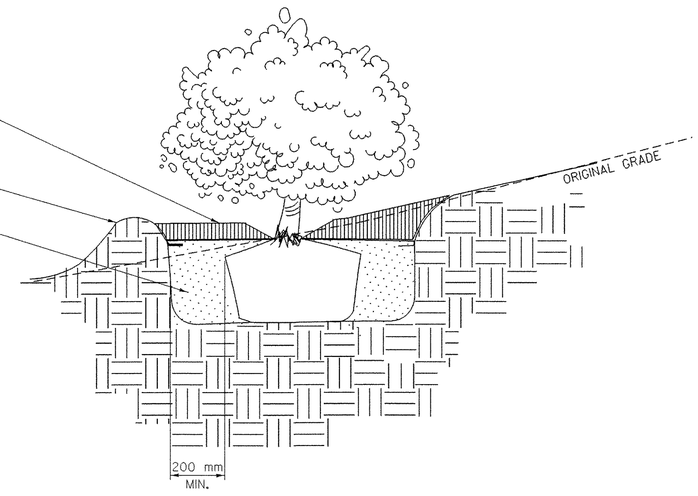

SHRUB PLANTING ON SLOPES DETAIL
NOT TO SCALE

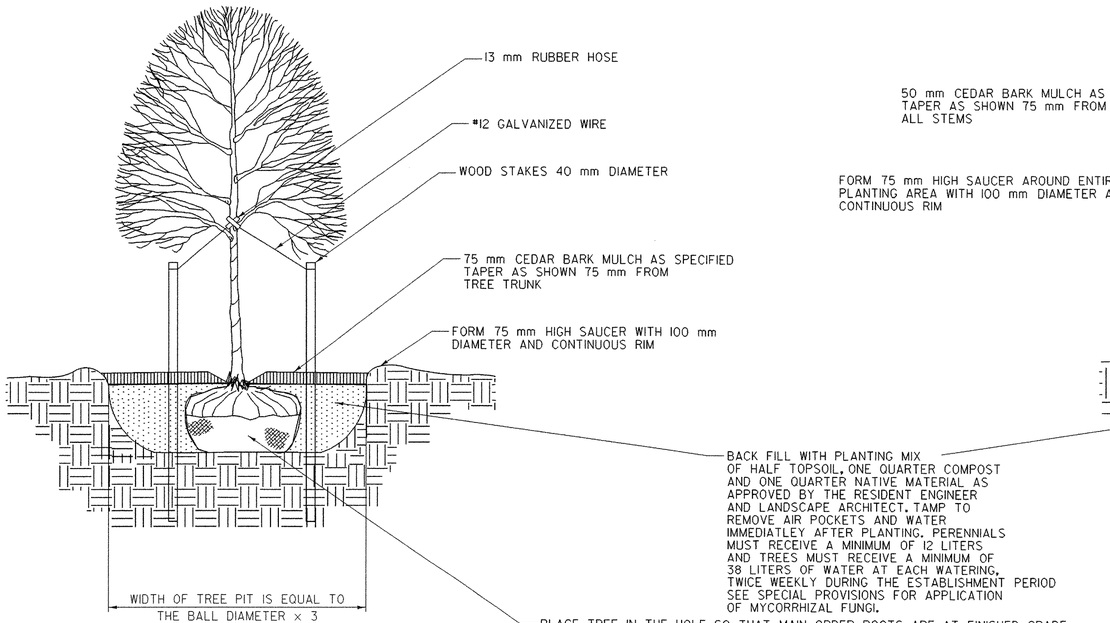

DECIDUOUS TREE PLANTING DETAIL
NOT TO SCALE

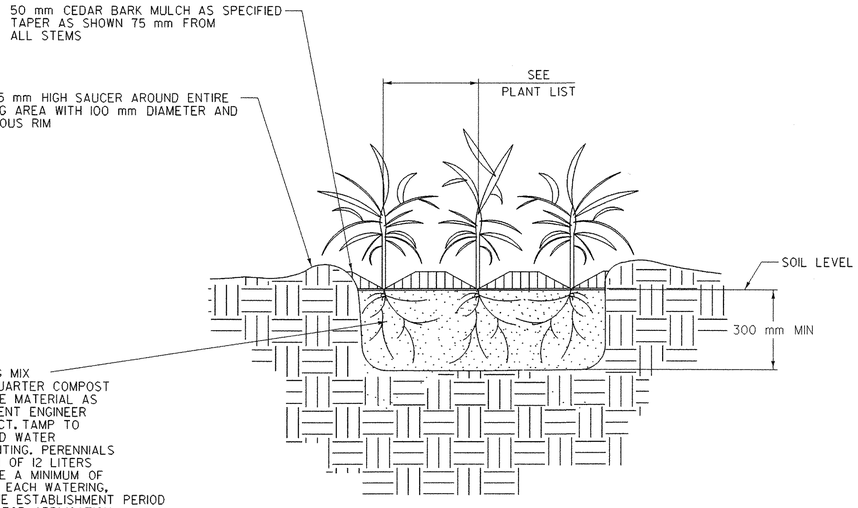

PERENNIAL PLANTING DETAIL
NOT TO SCALE

PLANT SOURCES ARE LISTED BELOW:

HORSEFORD GARDENS & NURSERY
2111 GREENBUSH RD.
CHARLOTTE, VT 05445
802-425-2811
LORI TAXTER

HIGH REACH FARM
2847 TAMPICO RD.
DANVILLE, VT 05828
802-748-3512
STEVE PARKER & SUSANNE TERRY

COBBLE CREEK NURSERY
WHOLESALE GROWERS
RD #2, BOX 3850
BRISTOL, VT 05433
802-453-3889
JOHN PADUA

ELMORE ROOTS NURSERY
PO BOX 171
ELMORE, VT 05657
1-800-42PLANT OR 888-3305
WWW.ELMOREROOTS.COM
DAVID L. FRIED

4 SEASONS GARDEN CENTER
427 MARSHALL AVENUE
WILLISTON, VT 05495
802-862-6036
COMMERCIAL@4SEASONSGC.COM

NOTES:

1. STAKE ONLY THOSE TREES PLANTED IN WINDY, EXPOSED LOCATIONS WHERE THEY MIGHT BE BLOWN OVER OR VANDALIZED AS DETERMINED BY RESIDENT ENGINEER OR LANDSCAPE ARCHITECT.
2. COMPLETELY REMOVE ALL GUY WIRES, RUBBER HOSE, AND STAKES ONE YEAR AFTER PLANTING.

PROJECT NAME:	HIGHGATE - FRANKLIN
PROJECT NUMBER:	STP RS 0301(1) SA
FILE NAME:85c060/design/dc060landdet.dgn	PLOT DATE: 09-MAY-2005
PROJECT LEADER: DELLASANTA	DRAWN BY: SQAUD B
DESIGNED BY: SQAUD B	CHECKED BY: SQAUD B
IPARM FILE NAME: dc060landdet.i	SHEET 192 OF 450

VAOT Metric

DURABLE 100mm WHITE LINE
STA 1+003.080 TO STA 1+300.000 LT (EDGE LINE)
STA 1+003.080 TO STA 1+300.000 RT (EDGE LINE)
ROUTE 78 - 40M (EDGE LINE)

TEMPORARY 100mm WHITE LINE
STA 1+003.080 TO STA 1+300.000 LT (EDGE LINE)
STA 1+003.080 TO STA 1+300.000 RT (EDGE LINE)
ROUTE 78 - 40M (EDGE LINE)

DURABLE 100mm YELLOW LINE
STA 1+006.080 TO STA 1+300.000 LT (CENTER LINE)
STA 1+006.080 TO STA 1+300.000 RT (CENTER LINE)
ROUTE 78 - 40M (CENTER LINE)

TEMPORARY 100mm YELLOW LINE
STA 1+006.080 TO STA 1+300.000 LT (CENTER LINE)
STA 1+006.080 TO STA 1+300.000 RT (CENTER LINE)
ROUTE 78 - 40M (CENTER LINE)

REMOVAL OF EXISTING PAVEMENT MARKINGS
23M ON ROUTE 78 (CENTER LINE)
23M ON ROUTE 78 RT (EDGE LINE)

DURABLE LETTER OR SYMBOL
STA 1+009.150 LT "STOP"

TEMPORARY LETTER OR SYMBOL
STA 1+009.150 LT "STOP"

DURABLE 600mm STOP BAR
STA 1+006.410 LT (6M)

TEMPORARY 600mm STOP BAR
STA 1+006.410 LT (6M)

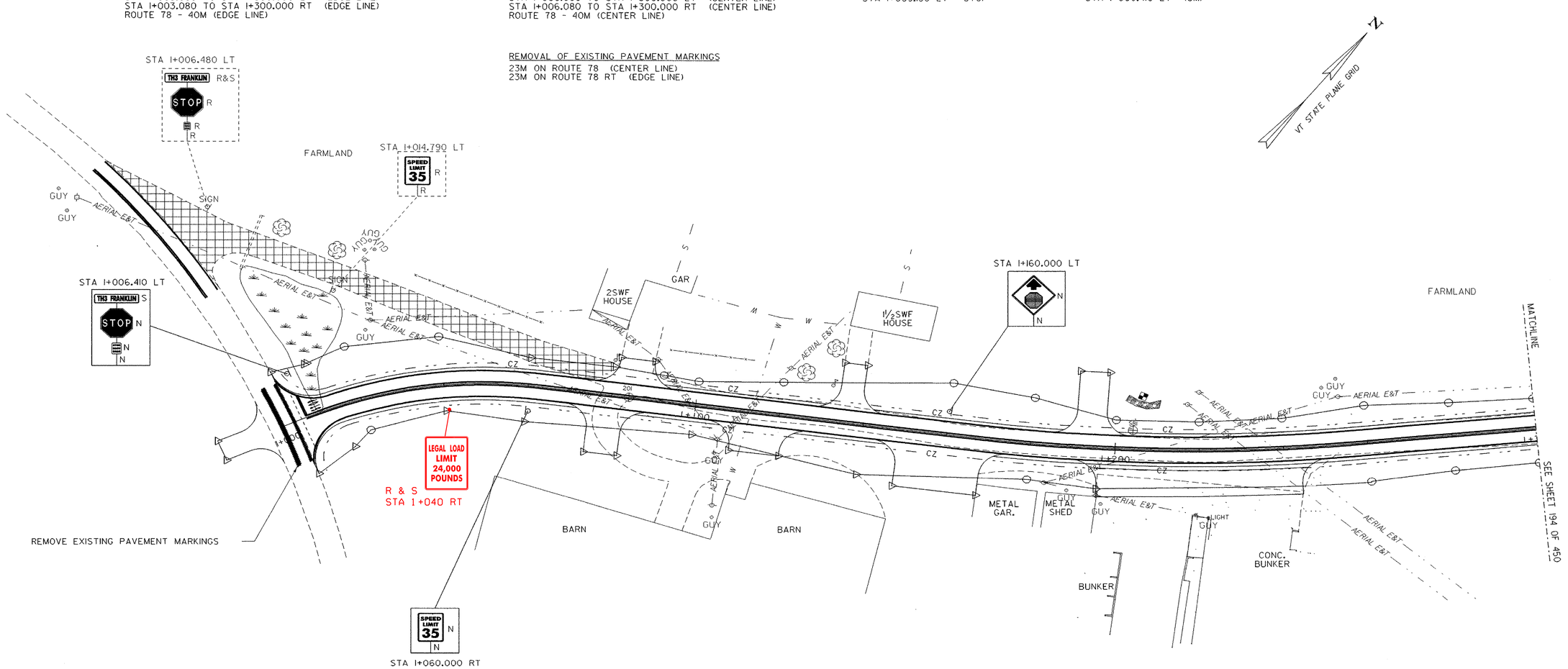

SIGN LEGEND

R = REMOVE
S = SALVAGE
N = NEW
RET = RETAIN
T&T = THINNING & TRIMMING
B-B = BACK TO BACK

TRAFFIC SIGNS & PAVEMENT MARKINGS SHEET

0 10 20 30
SCALE IN METERS

PROJECT NAME:	HIGHGATE - FRANKLIN
PROJECT NUMBER:	STP RS 0301(I) SA
FILE NAME: ...85c060/design/dc060tts.dgn	PLOT DATE: 09-MAY-2005
PROJECT LEADER: DELLASANTA	DRAWN BY: SQUAD B
DESIGNED BY: SQUAD B	CHECKED BY: SQUAD B
IPARM FILE NAME: dc060tsl.i	SHEET 193 OF 450

Metric

DURABLE 100mm WHITE LINE
STA 1+300.000 TO STA 1+660.000 LT (EDGE LINE)
STA 1+300.000 TO STA 1+660.000 RT (EDGE LINE)

DURABLE 100mm YELLOW LINE
STA 1+300.000 TO STA 1+660.000 LT (CENTER LINE)
STA 1+300.000 TO STA 1+660.000 RT (CENTER LINE)

TEMPORARY 100mm WHITE LINE
STA 1+300.000 TO STA 1+660.000 LT (EDGE LINE)
STA 1+300.000 TO STA 1+660.000 RT (EDGE LINE)

TEMPORARY 100mm YELLOW LINE
STA 1+300.000 TO STA 1+660.000 LT (CENTER LINE)
STA 1+300.000 TO STA 1+660.000 RT (CENTER LINE)

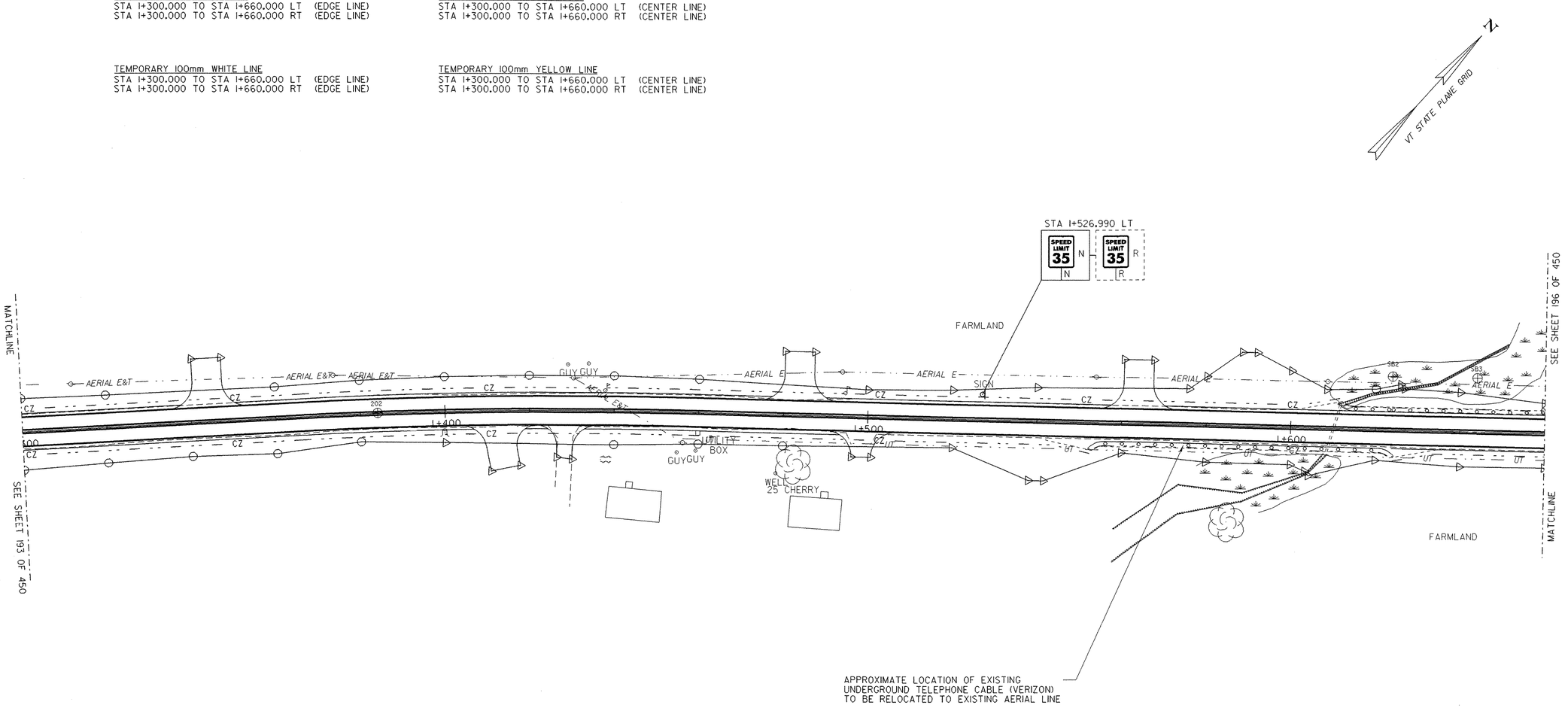

SIGN LEGEND

R = REMOVE
S = SALVAGE
N = NEW
RET = RETAIN
T&T = THINNING & TRIMMING
B-B = BACK TO BACK

TRAFFIC SIGNS & PAVEMENT MARKINGS SHEET

0 10 20 30
SCALE IN METERS

PROJECT NAME: HIGHGATE - FRANKLIN
PROJECT NUMBER: STP RS 0301(I) SA

FILE NAME: ...85c060/design/dc060tts.dgn PLOT DATE: 09-MAY-2005
PROJECT LEADER: DELLASANTA DRAWN BY: SQUAD B
DESIGNED BY: SQUAD B CHECKED BY: SQUAD B
IPARM FILE NAME: dc060ts2.i SHEET 194 OF 450

Metric

DURABLE 100mm WHITE LINE
STA 1+660.000 TO STA 2+020.000 LT (EDGE LINE)
STA 1+660.000 TO STA 2+020.000 RT (EDGE LINE)

DURABLE 100mm YELLOW LINE
STA 1+660.000 TO STA 2+020.000 LT (CENTER LINE)
STA 1+660.000 TO STA 2+020.000 RT (CENTER LINE)

TEMPORARY 100mm WHITE LINE
STA 1+660.000 TO STA 2+020.000 LT (EDGE LINE)
STA 1+660.000 TO STA 2+020.000 RT (EDGE LINE)

TEMPORARY 100mm YELLOW LINE
STA 1+660.000 TO STA 2+020.000 LT (CENTER LINE)
STA 1+660.000 TO STA 2+020.000 RT (CENTER LINE)

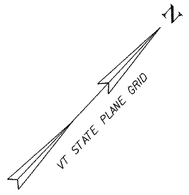

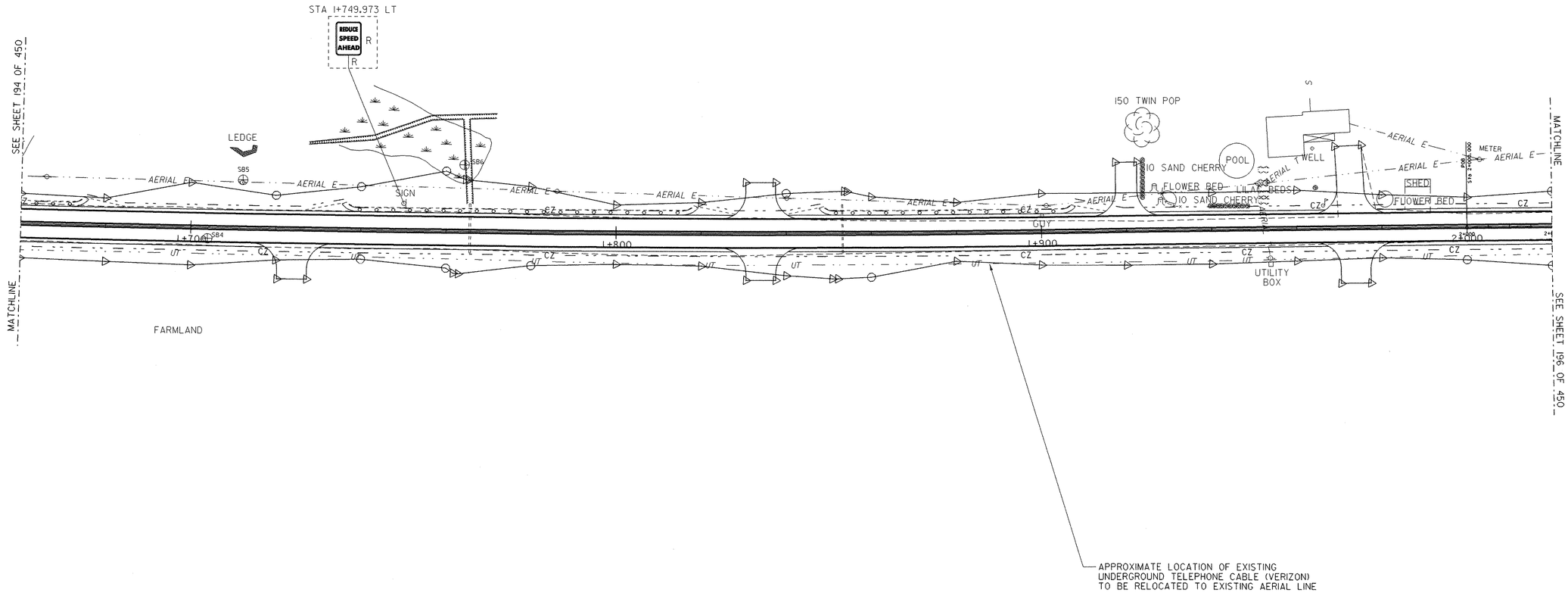

SIGN LEGEND

R = REMOVE
S = SALVAGE
N = NEW
RET = RETAIN
T&T = THINNING & TRIMMING
B-B = BACK TO BACK

TRAFFIC SIGNS & PAVEMENT MARKINGS SHEET

0 10 20 30
SCALE IN METERS

PROJECT NAME:	HIGHGATE - FRANKLIN
PROJECT NUMBER:	STP RS 0301(1) SA
FILE NAME: ...85c060/design/dc060tts.dgn	PLOT DATE: 09-MAY-2005
PROJECT LEADER: DELLASANTA	DRAWN BY: SQUAD B
DESIGNED BY: SQUAD B	CHECKED BY: SQUAD B
IPARM FILE NAME: dc060ts3.i	SHEET 195 OF 450

VAOT Metric

VT STATE PLANE GRID

DURABLE 100mm WHITE LINE
STA 2+020.000 TO STA 2+380.000 LT (EDGE LINE)
STA 2+020.000 TO STA 2+380.000 RT (EDGE LINE)

DURABLE 100mm YELLOW LINE
STA 2+020.000 TO STA 2+380.000 LT (CENTER LINE)
STA 2+020.000 TO STA 2+380.000 RT (CENTER LINE)

TEMPORARY 100mm WHITE LINE
STA 2+020.000 TO STA 2+380.000 LT (EDGE LINE)
STA 2+020.000 TO STA 2+380.000 RT (EDGE LINE)

TEMPORARY 100mm YELLOW LINE
STA 2+020.000 TO STA 2+380.000 LT (CENTER LINE)
STA 2+020.000 TO STA 2+380.000 RT (CENTER LINE)

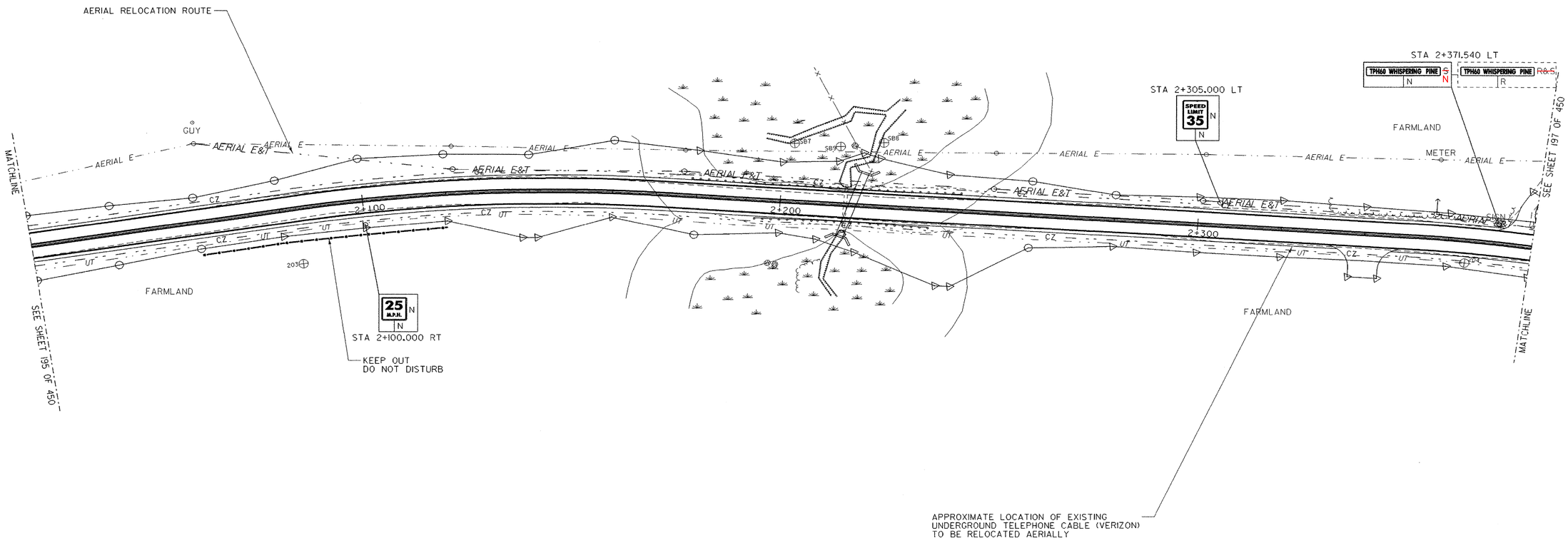

SIGN LEGEND

R = REMOVE
S = SALVAGE
N = NEW
RET = RETAIN
T&T = THINNING & TRIMMING
B-B = BACK TO BACK

TRAFFIC SIGNS & PAVEMENT MARKINGS SHEET

0 10 20 30
SCALE IN METERS

PROJECT NAME: HIGHGATE - FRANKLIN
PROJECT NUMBER: STP RS 0301(I) SA

FILE NAME: ...85c060/design/dc060ts.dgn PLOT DATE: 09-MAY-2005
PROJECT LEADER: DELLASANTA DRAWN BY: SQUAD B
DESIGNED BY: SQUAD B CHECKED BY: SQUAD B
IPARM FILE NAME: dc060ts4.i SHEET 196 OF 450

Metric

N

VT STATE PLANE GRID

DURABLE 100mm WHITE LINE
STA 2+380.000 TO STA 2+740.00 LT (EDGE LINE)
STA 2+380.000 TO STA 2+740.00 RT (EDGE LINE)

DURABLE 100mm YELLOW LINE
STA 2+380.000 TO STA 2+740.00 LT (CENTER LINE)
STA 2+380.000 TO STA 2+740.00 RT (CENTER LINE)

TEMPORARY 100mm WHITE LINE
STA 2+380.000 TO STA 2+740.00 LT (EDGE LINE)
STA 2+380.000 TO STA 2+740.00 RT (EDGE LINE)

TEMPORARY 100mm YELLOW LINE
STA 2+380.000 TO STA 2+740.00 LT (CENTER LINE)
STA 2+380.000 TO STA 2+740.00 RT (CENTER LINE)

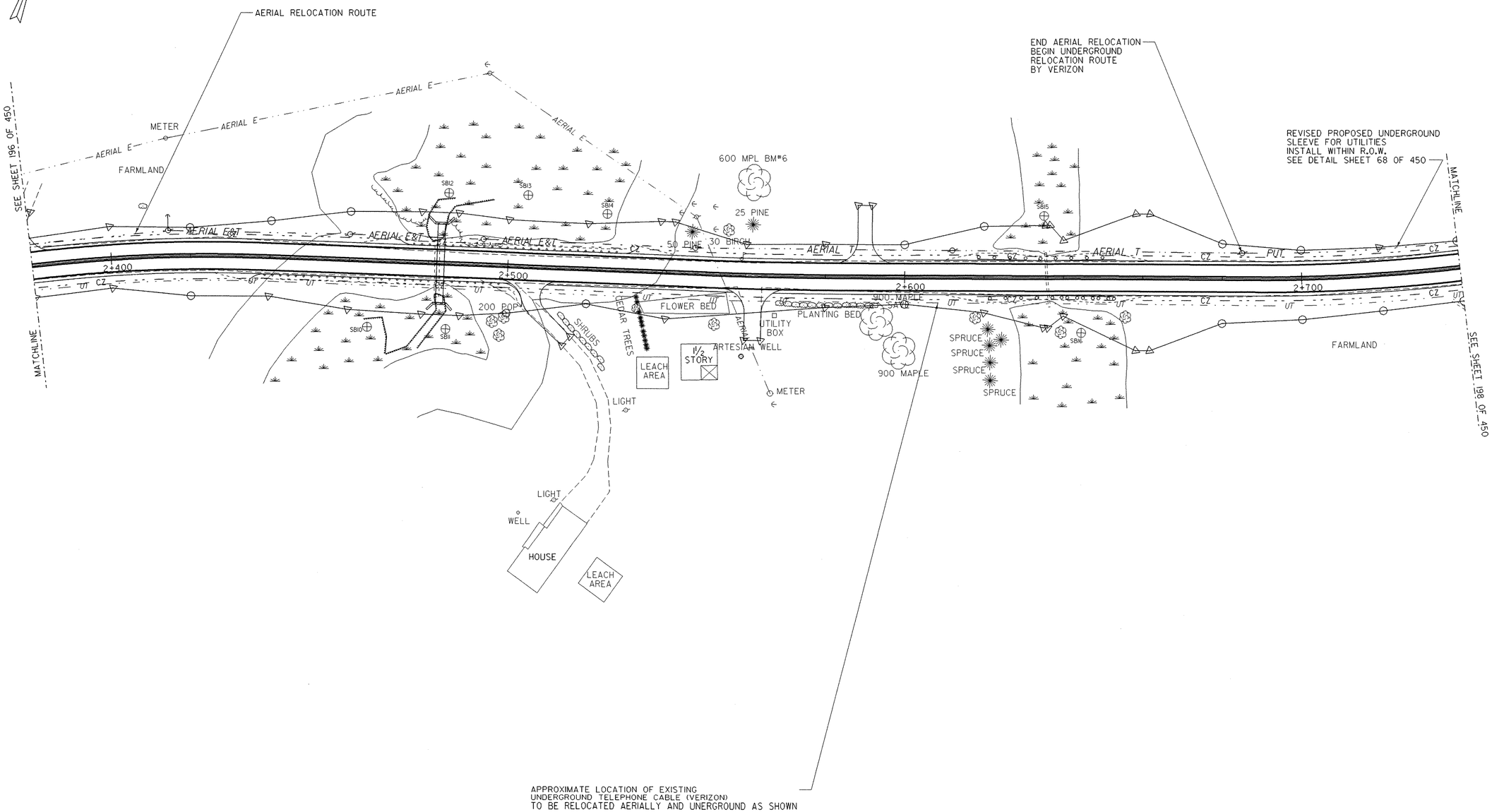

SIGN LEGEND

R = REMOVE
S = SALVAGE
N = NEW
RET = RETAIN
T&T = THINNING & TRIMMING
B-B = BACK TO BACK

TRAFFIC SIGNS & PAVEMENT MARKINGS SHEET

0 10 20 30
SCALE IN METERS

PROJECT NAME:	HIGHGATE - FRANKLIN
PROJECT NUMBER:	STP RS 0301(1) SA
FILE NAME: ...85c060/design/dc060tts.dgn	PLOT DATE: 09-MAY-2005
PROJECT LEADER: DELLASANTA	DRAWN BY: SQUAD B
DESIGNED BY: SQUAD B	CHECKED BY: SQUAD B
IPARM FILE NAME: dc060ts5.i	SHEET 197 OF 450

Metric

VT STATE PLANE GRID

DURABLE 100mm WHITE LINE
STA 2+740.000 TO STA 3+100.00 LT (EDGE LINE)
STA 2+740.000 TO STA 3+100.00 RT (EDGE LINE)

DURABLE 100mm YELLOW LINE
STA 2+740.000 TO STA 3+100.00 LT (CENTER LINE)
STA 2+740.000 TO STA 3+100.00 RT (CENTER LINE)

TEMPORARY 100mm WHITE LINE
STA 2+740.000 TO STA 3+100.00 LT (EDGE LINE)
STA 2+740.000 TO STA 3+100.00 RT (EDGE LINE)

TEMPORARY 100mm YELLOW LINE
STA 2+740.000 TO STA 3+100.00 LT (CENTER LINE)
STA 2+740.000 TO STA 3+100.00 RT (CENTER LINE)

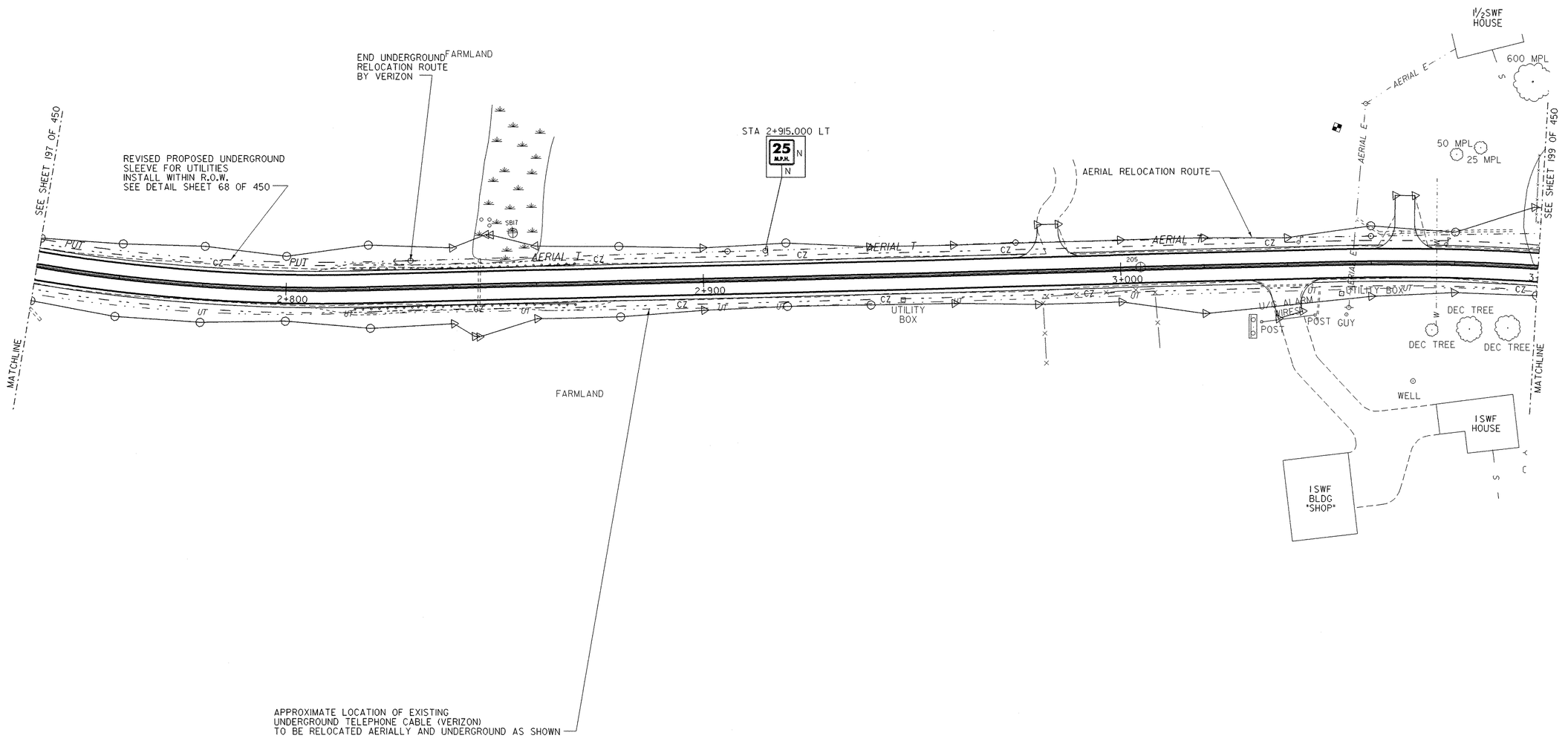

SIGN LEGEND

R = REMOVE
S = SALVAGE
N = NEW
RET = RETAIN
T&T = THINNING & TRIMMING
B-B = BACK TO BACK

TRAFFIC SIGNS & PAVEMENT MARKINGS SHEET

0 10 20 30
SCALE IN METERS

PROJECT NAME: HIGHGATE - FRANKLIN	
PROJECT NUMBER: STP RS 0301(1) SA	
FILE NAME: ...85c060/design/dc060tts.dgn	PLOT DATE: 09-MAY-2005
PROJECT LEADER: DELLASANTA	DRAWN BY: SQUAD B
DESIGNED BY: SQUAD B	CHECKED BY: SQUAD B
IPARM FILE NAME: dc060ts6.i	SHEET 198 OF 450

Metric

VT STATE PLANE GRID

DURABLE 100mm WHITE LINE
STA 3+100.000 TO STA 3+460.00 LT (EDGE LINE)
STA 3+100.000 TO STA 3+460.00 RT (EDGE LINE)

DURABLE 100mm YELLOW LINE
STA 3+100.000 TO STA 3+460.00 LT (CENTER LINE)
STA 3+100.000 TO STA 3+460.00 RT (CENTER LINE)

TEMPORARY 100mm WHITE LINE
STA 3+100.000 TO STA 3+460.00 LT (EDGE LINE)
STA 3+100.000 TO STA 3+460.00 RT (EDGE LINE)

TEMPORARY 100mm YELLOW LINE
STA 3+100.000 TO STA 3+460.00 LT (CENTER LINE)
STA 3+100.000 TO STA 3+460.00 RT (CENTER LINE)

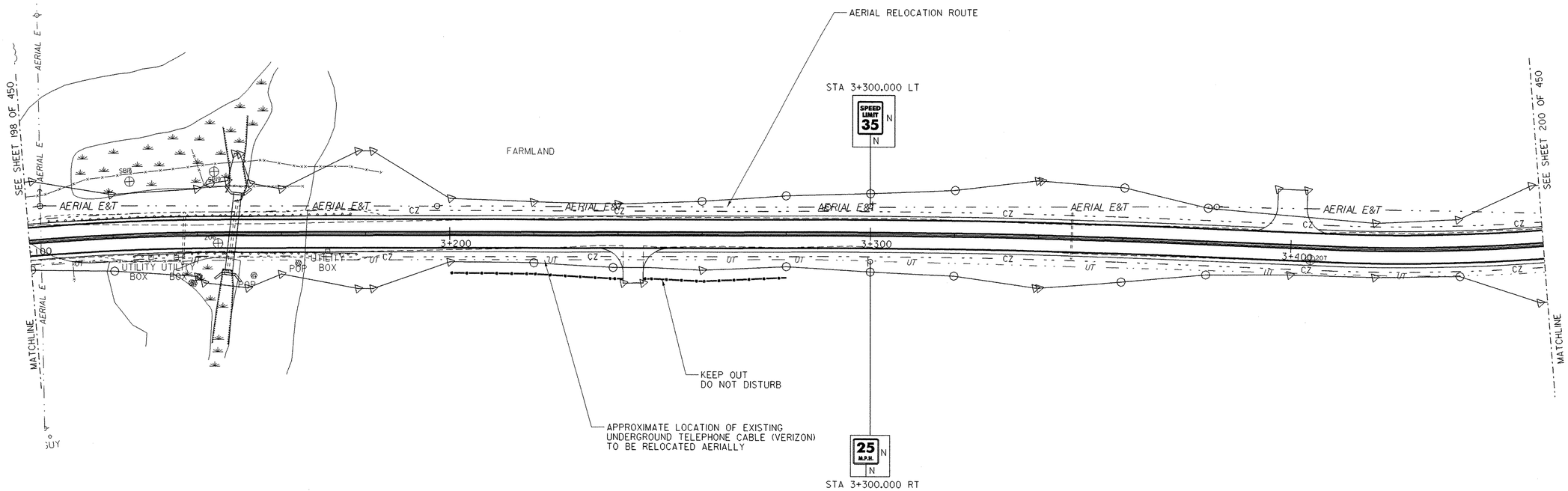

SIGN LEGEND

R = REMOVE
S = SALVAGE
N = NEW
RET = RETAIN
T&T = THINNING & TRIMMING
B-B = BACK TO BACK

TRAFFIC SIGNS & PAVEMENT MARKINGS SHEET

0 10 20 30
SCALE IN METERS

PROJECT NAME:	HIGHGATE - FRANKLIN
PROJECT NUMBER:	STP RS 0301(1) SA
FILE NAME: ...85c060/design/dc060tts.dgn	PLOT DATE: 09-MAY-2005
PROJECT LEADER: DELLASANTA	DRAWN BY: SQUAD B
DESIGNED BY: SQUAD B	CHECKED BY: SQUAD B
IPARM FILE NAME: dc060ts7.i	SHEET 199 OF 450

DURABLE 100mm WHITE LINE
STA 3+460.000 TO STA 3+760.00 LT (EDGE LINE)
STA 3+460.000 TO STA 3+760.00 RT (EDGE LINE)

DURABLE 100mm YELLOW LINE
STA 3+460.000 TO STA 3+760.00 LT (CENTER LINE)
STA 3+460.000 TO STA 3+760.00 RT (CENTER LINE)

TEMPORARY 100mm WHITE LINE
STA 3+460.000 TO STA 3+760.00 LT (EDGE LINE)
STA 3+460.000 TO STA 3+760.00 RT (EDGE LINE)

TEMPORARY 100mm YELLOW LINE
STA 3+460.000 TO STA 3+760.00 LT (CENTER LINE)
STA 3+460.000 TO STA 3+760.00 RT (CENTER LINE)

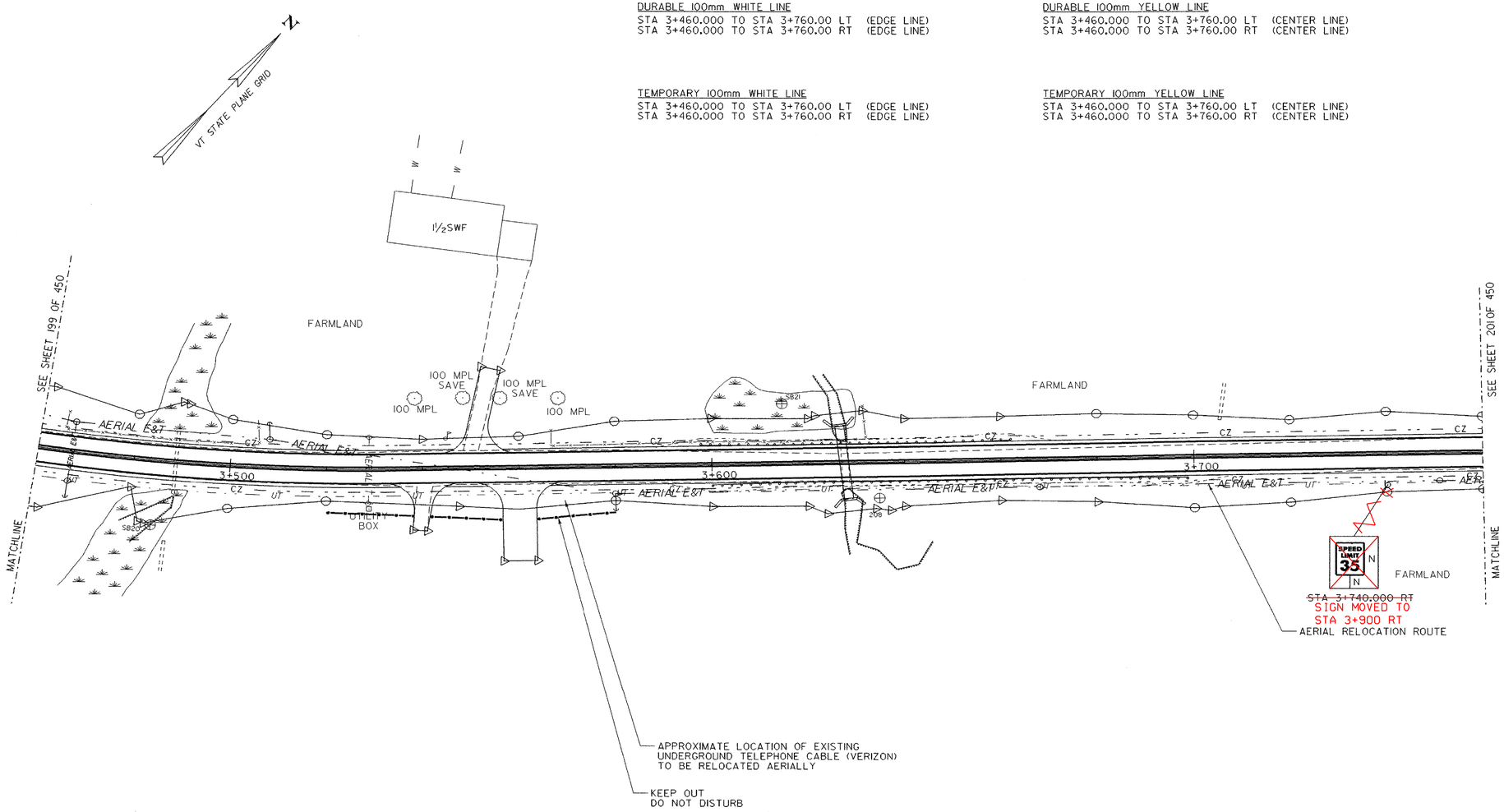

SIGN LEGEND

R = REMOVE
S = SALVAGE
N = NEW
RET = RETAIN
T&T = THINNING & TRIMMING
B-B = BACK TO BACK

TRAFFIC SIGNS & PAVEMENT MARKINGS SHEET

0 10 20 30
SCALE IN METERS

PROJECT NAME:	HIGHGATE - FRANKLIN
PROJECT NUMBER:	STP RS 0301(1) SA
FILE NAME: ...85c060/design/dc060tts.dgn	PLOT DATE: 09-MAY-2005
PROJECT LEADER: DELLASANTA	DRAWN BY: SQUAD B
DESIGNED BY: SQUAD B	CHECKED BY: SQUAD B
IPARM FILE NAME: dc060ts8.i	SHEET 200 OF 450

DURABLE 100mm WHITE LINE
STA 3+760.000 TO STA 3+821.200 LT (EDGE LINE)
STA 3+760.000 TO STA 4+120.000 RT (EDGE LINE)
STA 3+851.310 TO STA 4+120.000 LT (EDGE LINE)
STA 20+000.000 TO STA 20+030.000 LT (TH #32 EDGE LINE)
STA 20+000.000 TO STA 20+030.000 RT (TH #32 EDGE LINE)

DURABLE 100mm YELLOW LINE
STA 3+760.000 TO STA 3+827.660 LT (CENTER LINE)
STA 3+760.000 TO STA 3+827.660 RT (CENTER LINE)
STA 3+846.790 TO STA 4+120.000 LT (CENTER LINE)
STA 3+846.790 TO STA 4+120.000 RT (CENTER LINE)
STA 20+005.800 TO STA 20+030.000 LT (TH #32 CENTER LINE)
STA 20+005.800 TO STA 20+030.000 RT (TH #32 CENTER LINE)

DURABLE LETTER OR SYMBOL
STA 20+009.070 LT (TH #32 - "STOP")

TEMPORARY LETTER OR SYMBOL
STA 20+009.070 LT (TH #32 - "STOP")

DURABLE 600mm STOP BAR
STA 20+006.320 LT (TH #32 - IIM)

TEMPORARY 600mm STOP BAR
STA 20+006.320 LT (TH #32 - IIM)

TEMPORARY 100mm WHITE LINE
STA 3+760.000 TO STA 3+821.200 LT (EDGE LINE)
STA 3+760.000 TO STA 4+120.000 RT (EDGE LINE)
STA 3+851.310 TO STA 4+120.000 LT (EDGE LINE)
STA 20+000.000 TO STA 20+030.000 LT (TH #32 EDGE LINE)
STA 20+000.000 TO STA 20+030.000 RT (TH #32 EDGE LINE)

TEMPORARY 100mm YELLOW LINE
STA 3+760.000 TO STA 3+827.660 LT (CENTER LINE)
STA 3+760.000 TO STA 3+827.660 RT (CENTER LINE)
STA 3+846.790 TO STA 4+120.000 LT (CENTER LINE)
STA 3+846.790 TO STA 4+120.000 RT (CENTER LINE)
STA 20+005.800 TO STA 20+030.000 LT (TH #32 CENTER LINE)
STA 20+005.800 TO STA 20+030.000 RT (TH #32 CENTER LINE)

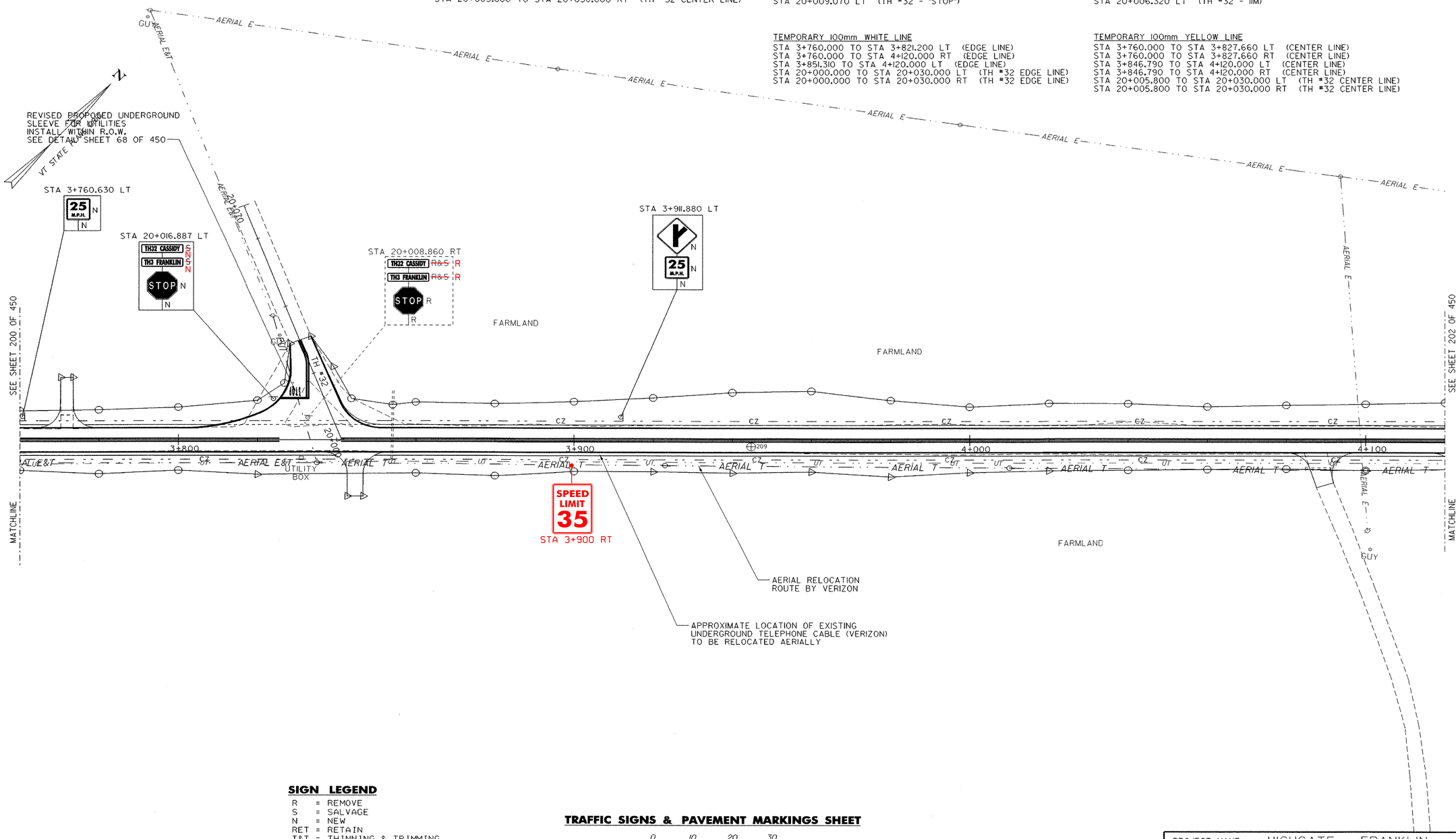

SIGN LEGEND

R = REMOVE
S = SALVAGE
N = NEW
RET = RETAIN
T&T = THINNING & TRIMMING
B-B = BACK TO BACK

TRAFFIC SIGNS & PAVEMENT MARKINGS SHEET

0 10 20 30
SCALE IN METERS

PROJECT NAME: HIGHGATE - FRANKLIN
PROJECT NUMBER: STP RS 0301(I) SA

FILE NAME: ...85c060/design/dc060tts.dgn
PROJECT LEADER: DELLASANTA
DESIGNED BY: SQUAD B
IPARM FILE NAME: dc060ts9.i
PLOT DATE: 09-MAY-2005
DRAWN BY: SQUAD B
CHECKED BY: SQUAD B
SHEET 201 OF 450

DURABLE 100mm WHITE LINE
STA 4+120.000 TO STA 4+480.000 LT (EDGE LINE)
STA 4+120.000 TO STA 4+480.000 RT (EDGE LINE)

DURABLE 100mm YELLOW LINE
STA 4+120.000 TO STA 4+480.000 LT (CENTER LINE)
STA 4+120.000 TO STA 4+480.000 RT (CENTER LINE)

TEMPORARY 100mm WHITE LINE
STA 4+120.000 TO STA 4+480.000 LT (EDGE LINE)
STA 4+120.000 TO STA 4+480.000 RT (EDGE LINE)

TEMPORARY 100mm YELLOW LINE
STA 4+120.000 TO STA 4+480.000 LT (CENTER LINE)
STA 4+120.000 TO STA 4+480.000 RT (CENTER LINE)

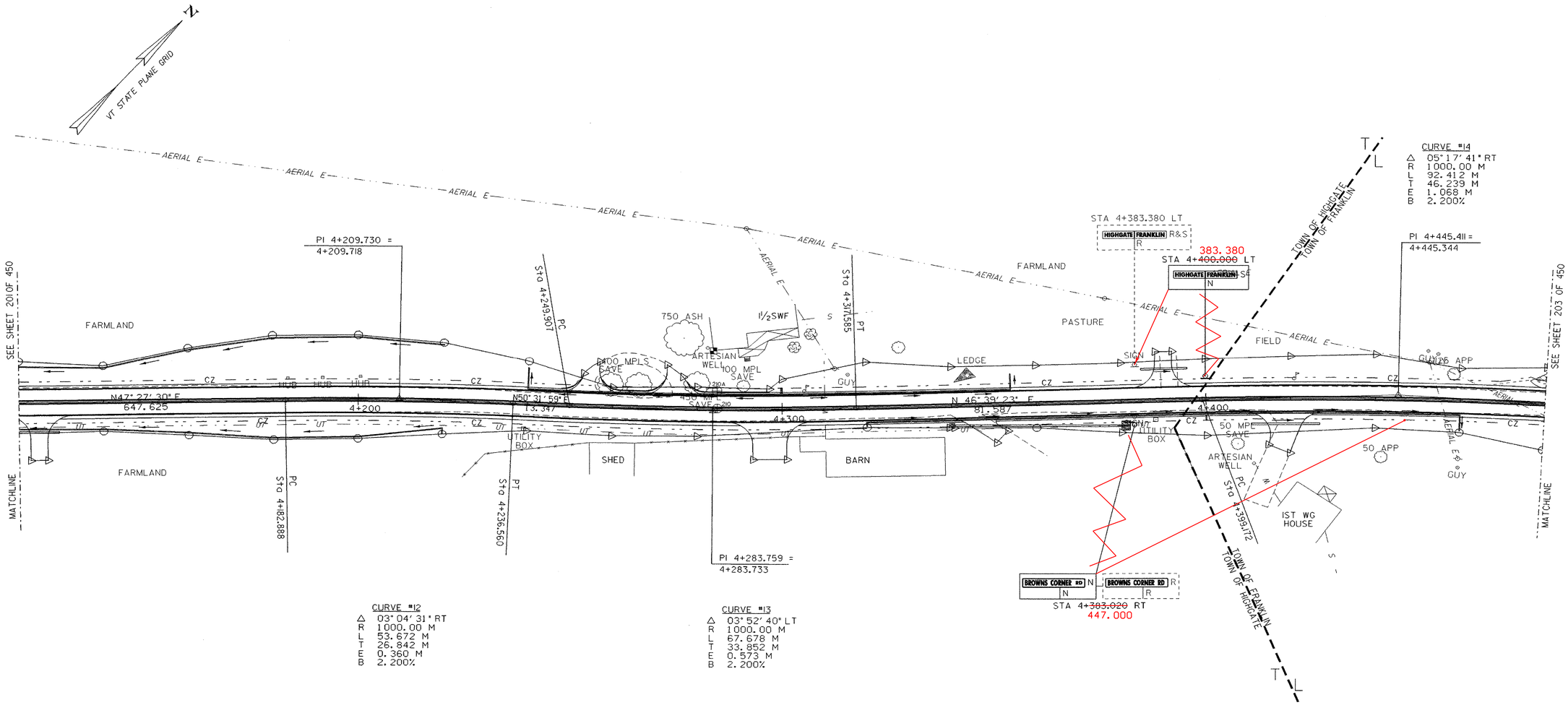

CURVE #14
Δ 05° 17' 41" RT
R 1000.00 M
L 92.412 M
T 46.239 M
E 1.068 M
B 2.200%

CURVE #12
Δ 03° 04' 31" RT
R 1000.00 M
L 53.672 M
T 26.842 M
E 0.360 M
B 2.200%

CURVE #13
Δ 03° 52' 40" LT
R 1000.00 M
L 67.678 M
T 33.852 M
E 0.573 M
B 2.200%

SIGN LEGEND

R = REMOVE
S = SALVAGE
N = NEW
RET = RETAIN
T&T = THINNING & TRIMMING
B-B = BACK TO BACK

TRAFFIC SIGNS & PAVEMENT MARKINGS SHEET

0 10 20 30
SCALE IN METERS

PROJECT NAME:	HIGHGATE - FRANKLIN
PROJECT NUMBER:	STP RS 0301(1) SA
FILE NAME: ...85c060/design/dc060tts.dgn	PLOT DATE: 09-MAY-2005
PROJECT LEADER: DELLASANTA	DRAWN BY: SQUAD B
DESIGNED BY: SQUAD B	CHECKED BY: SQUAD B
IPARM FILE NAME: dc060tsl0.i	SHEET 202 OF 450

VAOT Metric

DURABLE 100mm WHITE LINE
STA 4+480.000 TO STA 4+840.000 LT (EDGE LINE)
STA 4+480.000 TO STA 4+840.000 RT (EDGE LINE)

DURABLE 100mm YELLOW LINE
STA 4+480.000 TO STA 4+840.000 LT (CENTER LINE)
STA 4+480.000 TO STA 4+840.000 RT (CENTER LINE)

TEMPORARY 100mm WHITE LINE
STA 4+480.000 TO STA 4+840.000 LT (EDGE LINE)
STA 4+480.000 TO STA 4+840.000 RT (EDGE LINE)

TEMPORARY 100mm YELLOW LINE
STA 4+480.000 TO STA 4+840.000 LT (CENTER LINE)
STA 4+480.000 TO STA 4+840.000 RT (CENTER LINE)

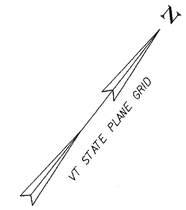

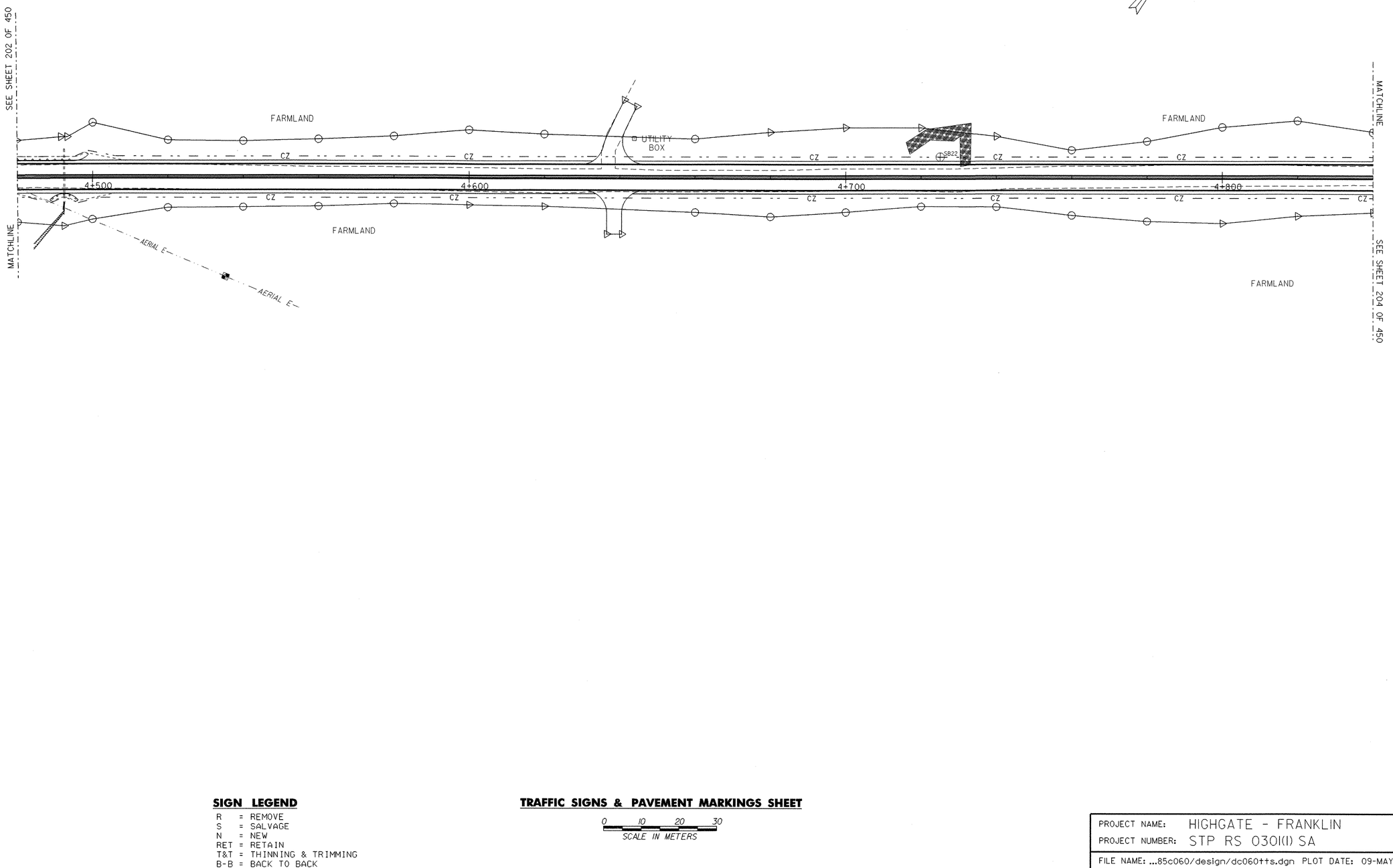

SIGN LEGEND

R = REMOVE
S = SALVAGE
N = NEW
RET = RETAIN
T&T = THINNING & TRIMMING
B-B = BACK TO BACK

TRAFFIC SIGNS & PAVEMENT MARKINGS SHEET

0 10 20 30
SCALE IN METERS

PROJECT NAME: HIGHGATE - FRANKLIN
PROJECT NUMBER: STP RS 0301(1) SA

FILE NAME: ...85c060/design/dc060tts.dgn
PROJECT LEADER: DELLASANTA
DESIGNED BY: SQUAD B
IPARM FILE NAME: dc060tsll.i
PLOT DATE: 09-MAY-2005
DRAWN BY: SQUAD B
CHECKED BY: SQUAD B
SHEET 203 OF 450

DURABLE 100mm WHITE LINE
STA 4+840.000 TO STA 5+140.000 LT (EDGE LINE)
STA 4+840.000 TO STA 5+140.000 RT (EDGE LINE)

DURABLE 100mm YELLOW LINE
STA 4+840.000 TO STA 5+140.000 LT (CENTER LINE)
STA 4+840.000 TO STA 5+140.000 RT (CENTER LINE)

TEMPORARY 100mm WHITE LINE
STA 4+840.000 TO STA 5+140.000 LT (EDGE LINE)
STA 4+840.000 TO STA 5+140.000 RT (EDGE LINE)

TEMPORARY 100mm YELLOW LINE
STA 4+840.000 TO STA 5+140.000 LT (CENTER LINE)
STA 4+840.000 TO STA 5+140.000 RT (CENTER LINE)

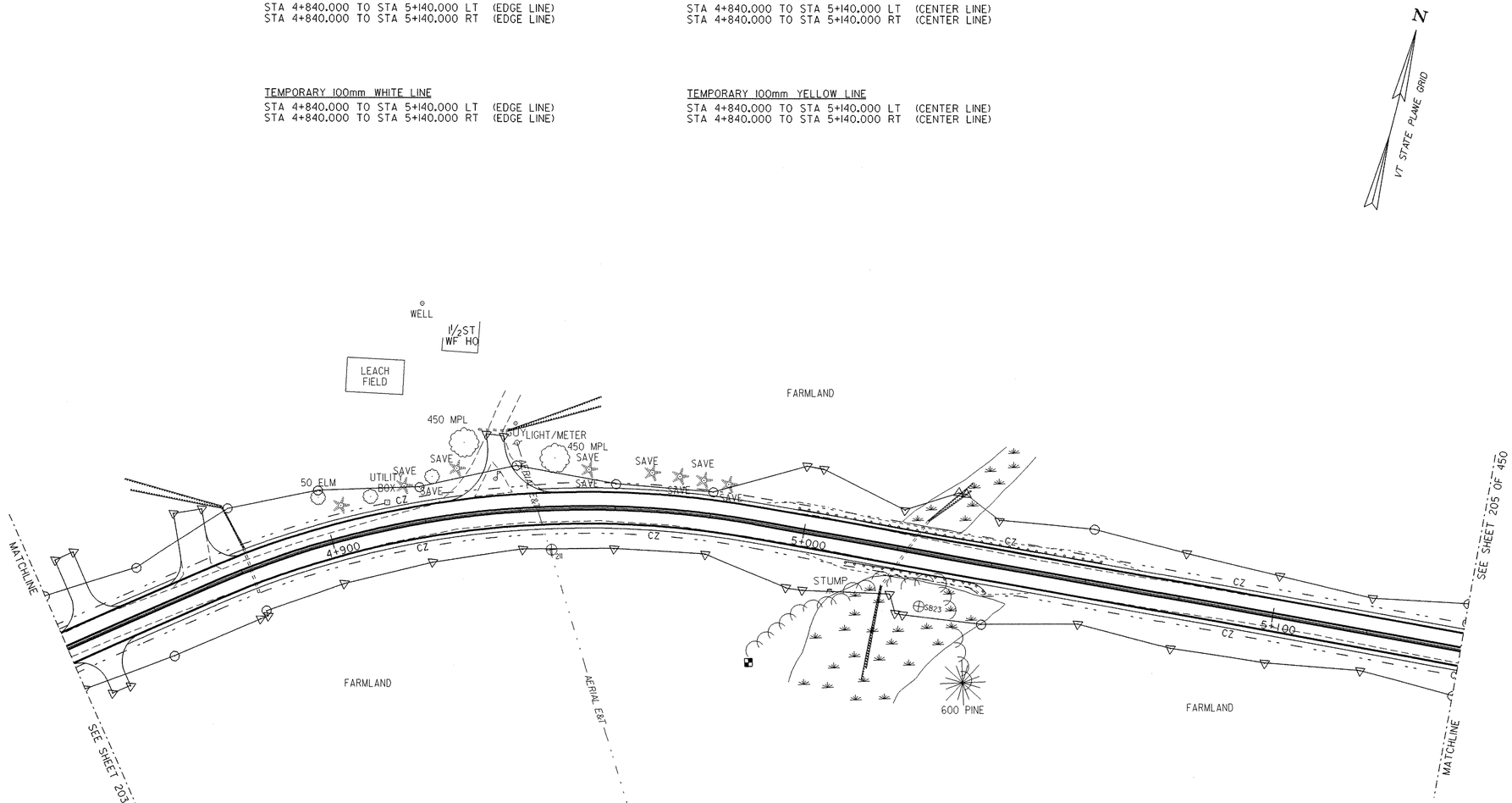

SIGN LEGEND

R = REMOVE
S = SALVAGE
N = NEW
RET = RETAIN
T&T = THINNING & TRIMMING
B-B = BACK TO BACK

TRAFFIC SIGNS & PAVEMENT MARKINGS SHEET

0 10 20 30
SCALE IN METERS

PROJECT NAME:	HIGHGATE - FRANKLIN
PROJECT NUMBER:	STP RS 0301(1) SA
FILE NAME: ...85c060/design/dc060tts.dgn	PLOT DATE: 09-MAY-2005
PROJECT LEADER: DELLASANTA	DRAWN BY: SQUAD B
DESIGNED BY: SQUAD B	CHECKED BY: SQUAD B
IPARM FILE NAME: dc060tsl2.i	SHEET 204 OF 450

VAOT Metric

DURABLE 100mm WHITE LINE
STA 5+140.000 TO STA 5+420.000 LT (EDGE LINE)
STA 5+140.000 TO STA 5+420.000 RT (EDGE LINE)

DURABLE 100mm YELLOW LINE
STA 5+140.000 TO STA 5+420.000 LT (CENTER LINE)
STA 5+140.000 TO STA 5+420.000 RT (CENTER LINE)

TEMPORARY 100mm WHITE LINE
STA 5+140.000 TO STA 5+420.000 LT (EDGE LINE)
STA 5+140.000 TO STA 5+420.000 RT (EDGE LINE)

TEMPORARY 100mm YELLOW LINE
STA 5+140.000 TO STA 5+420.000 LT (CENTER LINE)
STA 5+140.000 TO STA 5+420.000 RT (CENTER LINE)

N
VT STATE PLANE GRID

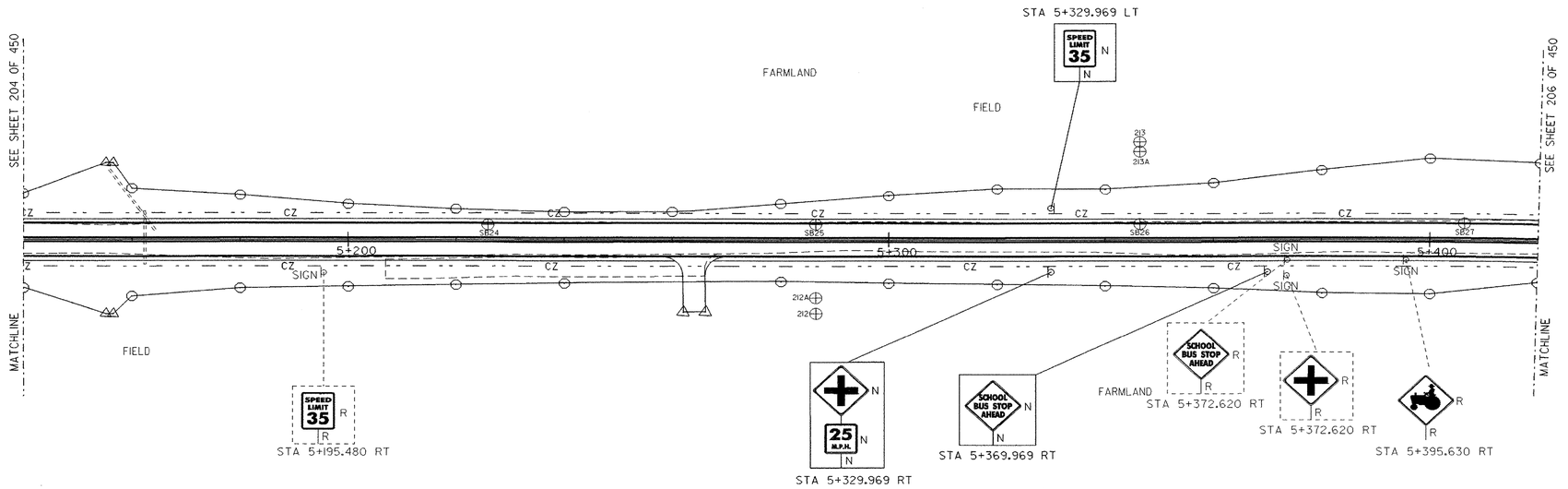

SIGN LEGEND

R = REMOVE
S = SALVAGE
N = NEW
RET = RETAIN
T&T = THINNING & TRIMMING
B-B = BACK TO BACK

TRAFFIC SIGNS & PAVEMENT MARKINGS SHEET

0 10 20 30
SCALE IN METERS

PROJECT NAME: HIGHGATE - FRANKLIN
PROJECT NUMBER: STP RS 0301(I) SA

FILE NAME: ...85c060/design/dc060tts.dgn
PROJECT LEADER: DELLASANTA
DESIGNED BY: SQUAD B
IPARM FILE NAME: dc060tsl3.i

PLOT DATE: 09-MAY-2005
DRAWN BY: SQUAD B
CHECKED BY: SQUAD B
SHEET 205 OF 450

DURABLE 100mm WHITE LINE

STA 5+420.000 TO STA 5+494.030 LT (EDGE LINE)
STA 5+420.000 TO STA 5+489.970 RT (EDGE LINE)
STA 21+005.770 TO STA 21+056.000 RT (TH #24 EDGE LINE)
STA 21+001.560 TO STA 21+056.000 LT (TH #24 EDGE LINE)
STA 22+001.710 TO STA 22+017.000 LT (TH #15 EDGE LINE)
STA 22+005.620 TO STA 22+017.000 RT (TH #15 EDGE LINE)
STA 5+521.500 TO STA 5+780.000 LT (EDGE LINE)
STA 5+518.000 TO STA 5+780.000 RT (EDGE LINE)

DURABLE 100mm YELLOW LINE

STA 5+420.000 TO STA 5+499.620 LT (CENTER LINE)
STA 5+420.000 TO STA 5+499.620 RT (CENTER LINE)
STA 5+520.753 TO STA 5+780.000 LT (CENTER LINE)
STA 5+520.753 TO STA 5+780.000 RT (CENTER LINE)
STA 21+005.610 TO STA 21+056.000 LT (TH #24 CENTER LINE)
STA 21+005.610 TO STA 21+056.000 RT (TH #24 CENTER LINE)
STA 22+005.600 TO STA 22+017.000 LT (TH #15 CENTER LINE)
STA 22+005.600 TO STA 22+017.000 RT (TH #15 CENTER LINE)

DURABLE LETTER OR SYMBOL

STA 21+008.290 LT (TH #24 - "STOP")
STA 22+008.260 LT (TH #15 - "STOP")
STA 5+523.803 LT ("STOP")

DURABLE 600mm STOP BAR

STA 21+005.540 LT (TH #24 - 6M)
STA 22+005.510 LT (TH #15 - 6M)
STA 5+521.053 LT (3M)

TEMPORARY 100mm WHITE LINE

STA 5+420.000 TO STA 5+494.030 LT (EDGE LINE)
STA 5+420.000 TO STA 5+489.970 RT (EDGE LINE)
STA 21+005.770 TO STA 21+056.000 RT (TH #24 EDGE LINE)
STA 21+001.560 TO STA 21+056.000 LT (TH #24 EDGE LINE)
STA 22+001.710 TO STA 22+017.000 LT (TH #15 EDGE LINE)
STA 22+005.620 TO STA 22+017.000 RT (TH #15 EDGE LINE)
STA 5+521.500 TO STA 5+780.000 LT (EDGE LINE)
STA 5+518.000 TO STA 5+780.000 RT (EDGE LINE)

TEMPORARY 100mm YELLOW LINE

STA 5+420.000 TO STA 5+499.620 LT (CENTER LINE)
STA 5+420.000 TO STA 5+499.620 RT (CENTER LINE)
STA 5+511.850 TO STA 5+780.000 LT (CENTER LINE)
STA 5+511.850 TO STA 5+780.000 RT (CENTER LINE)
STA 21+005.610 TO STA 21+056.000 LT (TH #24 CENTER LINE)
STA 21+005.610 TO STA 21+056.000 RT (TH #24 CENTER LINE)
STA 22+005.600 TO STA 22+017.000 LT (TH #15 CENTER LINE)
STA 22+005.600 TO STA 22+017.000 RT (TH #15 CENTER LINE)

TEMPORARY LETTER OR SYMBOL

STA 21+008.440 LT (TH #24 - "STOP")
STA 22+009.280 LT (TH #15 - "STOP")
STA 5+523.803 LT ("STOP")

TEMPORARY 600mm STOP BAR

STA 21+005.540 LT (TH #24 - 6M)
STA 22+005.510 LT (TH #15 - 6M)
STA 5+521.053 LT (3M)

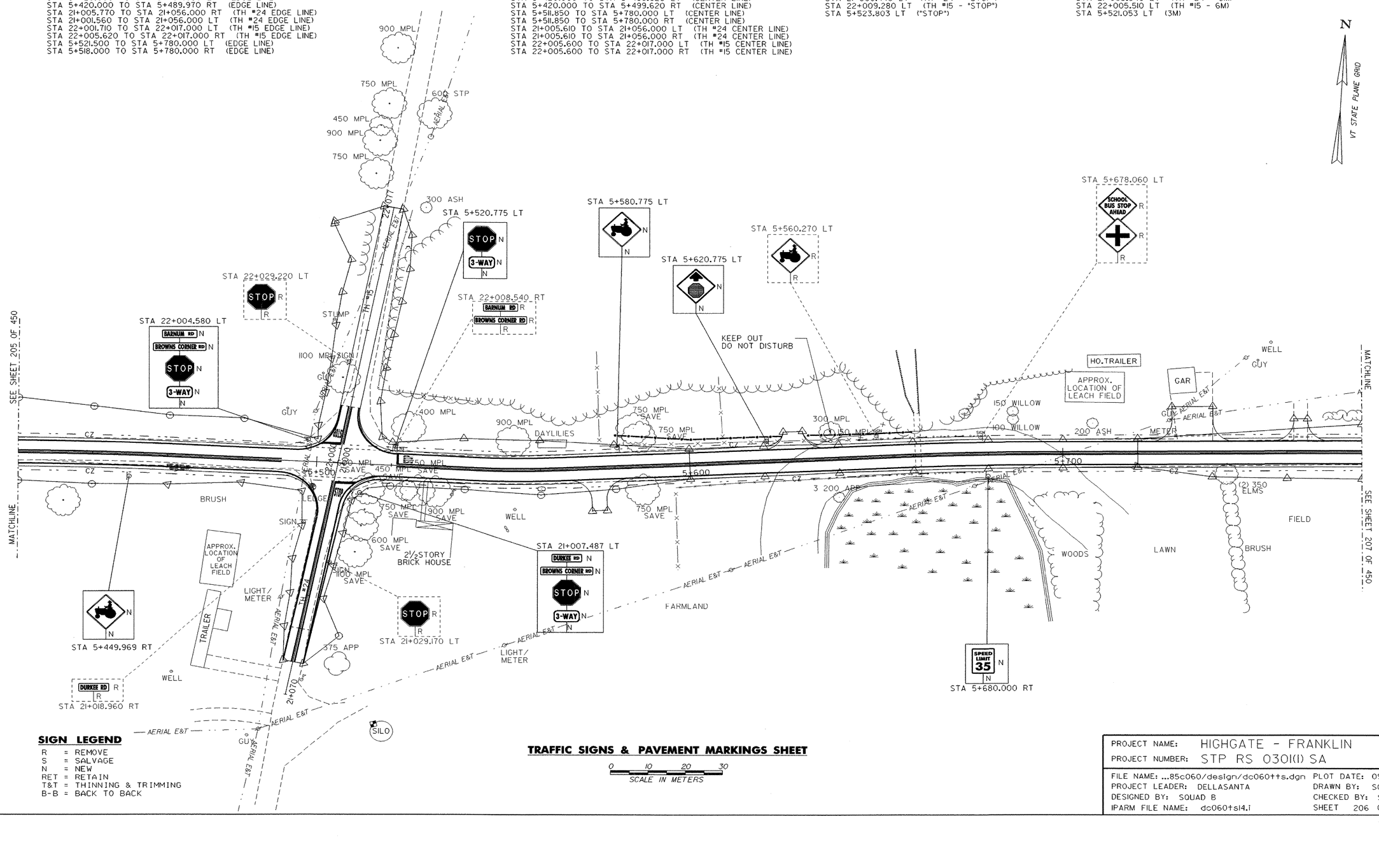

SIGN LEGEND

R = REMOVE
S = SALVAGE
N = NEW
RET = RETAIN
T&T = THINNING & TRIMMING
B-B = BACK TO BACK

TRAFFIC SIGNS & PAVEMENT MARKINGS SHEET

0 10 20 30
SCALE IN METERS

PROJECT NAME:	HIGHGATE - FRANKLIN
PROJECT NUMBER:	STP RS 0301(1) SA
FILE NAME: ...85c060/design/dc060tts.dgn	PLOT DATE: 09-MAY-2005
PROJECT LEADER: DELLASANTA	DRAWN BY: SQUAD B
DESIGNED BY: SQUAD B	CHECKED BY: SQUAD B
IPARM FILE NAME: dc060tsl4.i	SHEET 206 OF 450

DURABLE 100mm WHITE LINE
STA 5+780.000 TO STA 6+140.000 LT (EDGE LINE)
STA 5+780.000 TO STA 6+140.000 RT (EDGE LINE)

DURABLE 100mm YELLOW LINE
STA 5+780.000 TO STA 6+140.000 LT (CENTER LINE)
STA 5+780.000 TO STA 6+140.000 RT (CENTER LINE)

TEMPORARY 100mm WHITE LINE
STA 5+780.000 TO STA 6+140.000 LT (EDGE LINE)
STA 5+780.000 TO STA 6+140.000 RT (EDGE LINE)

TEMPORARY 100mm YELLOW LINE
STA 5+780.000 TO STA 6+140.000 LT (CENTER LINE)
STA 5+780.000 TO STA 6+140.000 RT (CENTER LINE)

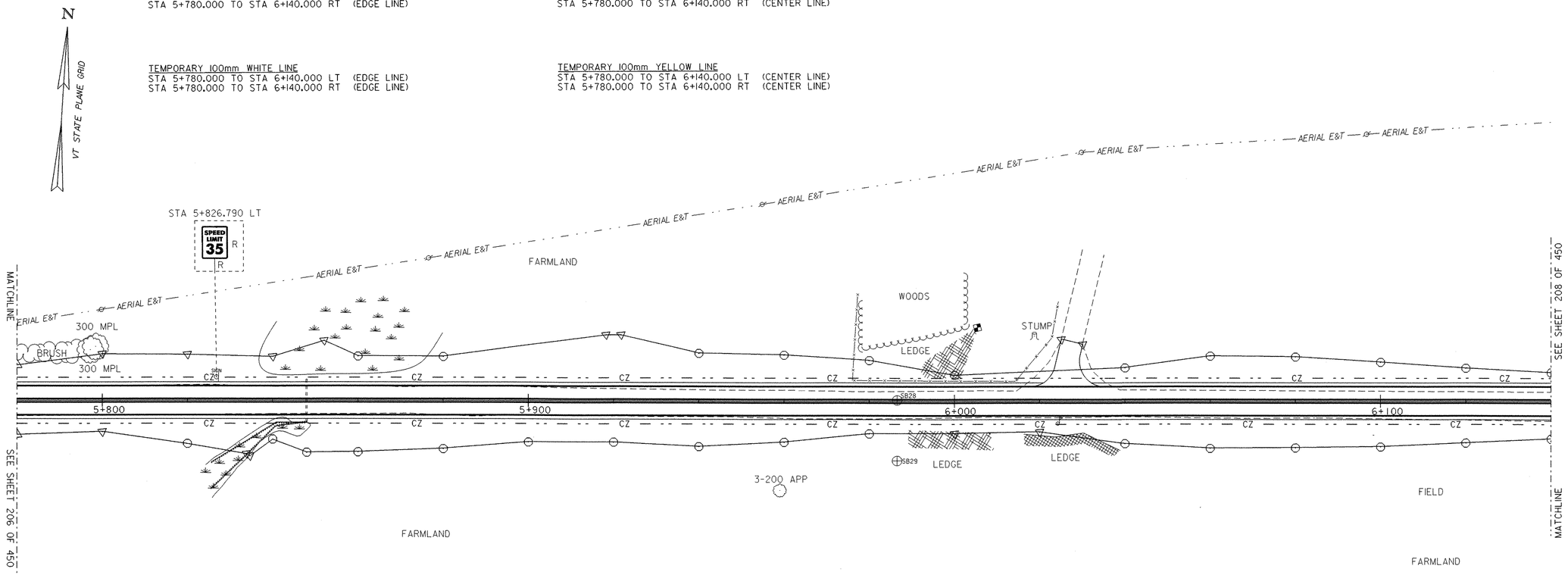

SIGN LEGEND

R = REMOVE
S = SALVAGE
N = NEW
RET = RETAIN
T&T = THINNING & TRIMMING
B-B = BACK TO BACK

TRAFFIC SIGNS & PAVEMENT MARKINGS SHEET

0 10 20 30
SCALE IN METERS

PROJECT NAME:	HIGHGATE - FRANKLIN
PROJECT NUMBER:	STP RS 0301(1) SA
FILE NAME: ...85c060/design/dc060tts.dgn	PLOT DATE: 09-MAY-2005
PROJECT LEADER: DELLASANTA	DRAWN BY: SQUAD B
DESIGNED BY: SQUAD B	CHECKED BY: SQUAD B
IPARM FILE NAME: dc060tsl5.i	SHEET 207 OF 450

DURABLE 100mm WHITE LINE
STA 6+140.000 TO STA 6+440.000 LT (EDGE LINE)
STA 6+140.000 TO STA 6+440.000 RT (EDGE LINE)

DURABLE 100mm YELLOW LINE
STA 6+140.000 TO STA 6+440.000 LT (CENTER LINE)
STA 6+140.000 TO STA 6+440.000 RT (CENTER LINE)

TEMPORARY 100mm WHITE LINE
STA 6+140.000 TO STA 6+440.000 LT (EDGE LINE)
STA 6+140.000 TO STA 6+440.000 RT (EDGE LINE)

TEMPORARY 100mm YELLOW LINE
STA 6+140.000 TO STA 6+440.000 LT (CENTER LINE)
STA 6+140.000 TO STA 6+440.000 RT (CENTER LINE)

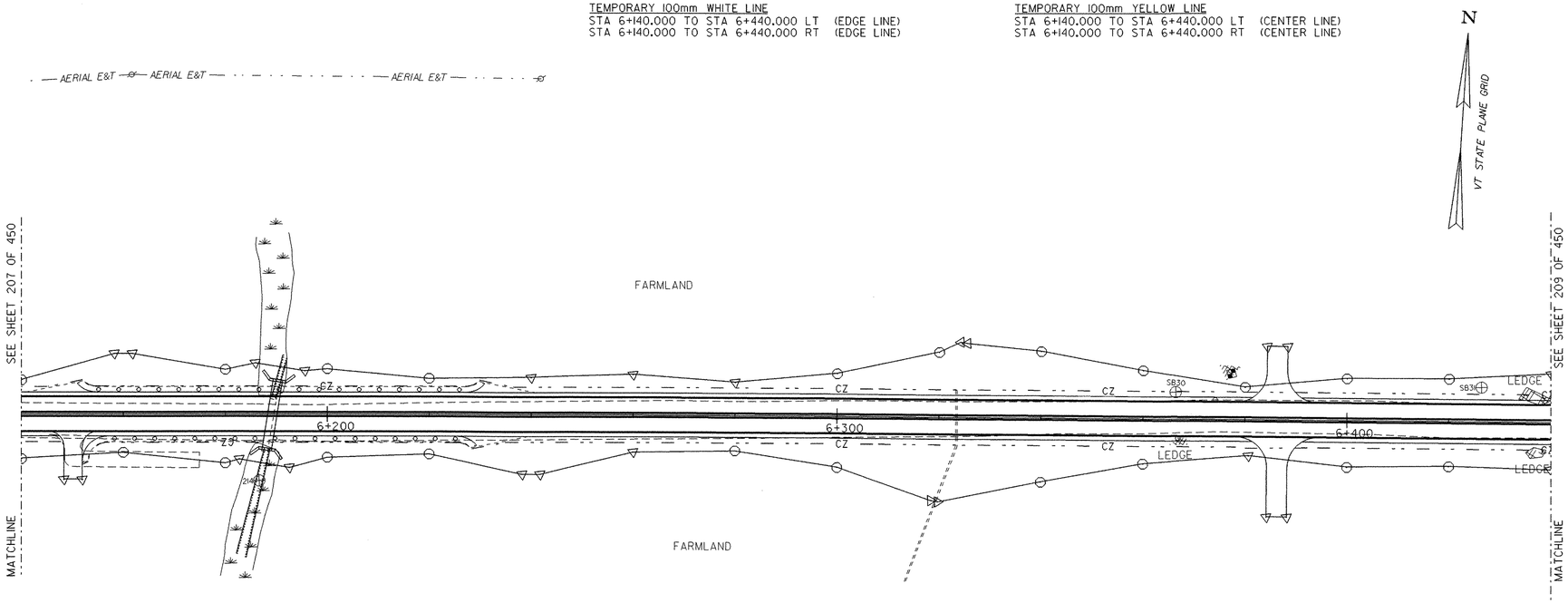

SIGN LEGEND

R = REMOVE
S = SALVAGE
N = NEW
RET = RETAIN
T&T = THINNING & TRIMMING
B-B = BACK TO BACK

TRAFFIC SIGNS & PAVEMENT MARKINGS SHEET

0 10 20 30
SCALE IN METERS

PROJECT NAME:	HIGHGATE - FRANKLIN
PROJECT NUMBER:	STP RS 0301(1) SA
FILE NAME: ...85c060/design/dc060tts.dgn	PLOT DATE: 09-MAY-2005
PROJECT LEADER: DELLASANTA	DRAWN BY: SQUAD B
DESIGNED BY: SQUAD B	CHECKED BY: SQUAD B
IPARM FILE NAME: dc060tsl6.i	SHEET 208 OF 450

DURABLE 100mm WHITE LINE
STA 6+440.000 TO STA 6+720.000 LT (EDGE LINE)
STA 6+440.000 TO STA 6+613.890 RT (EDGE LINE)
STA 6+643.220 TO STA 6+720.000 RT (EDGE LINE)
STA 23+002.520 TO STA 23+010.000 LT (TH #25 EDGE LINE)
STA 23+002.550 TO STA 23+010.000 RT (TH #25 EDGE LINE)

DURABLE 100mm YELLOW LINE
STA 6+440.000 TO STA 6+622.560 LT (CENTER LINE)
STA 6+440.000 TO STA 6+622.560 RT (CENTER LINE)
STA 6+634.550 TO STA 6+720.000 LT (CENTER LINE)
STA 6+634.550 TO STA 6+720.000 RT (CENTER LINE)
STA 23+004.600 TO STA 23+010.000 LT (TH #25 CENTER LINE)
STA 23+004.600 TO STA 23+010.000 RT (TH #25 CENTER LINE)

DURABLE LETTER OR SYMBOL
STA 23+008.128 LT (TH #25 - "STOP")

DURABLE 600mm STOP BAR
STA 23+005.378 LT (TH #25 - 9M)

TEMPORARY 100mm WHITE LINE
STA 6+440.000 TO STA 6+720.000 LT (EDGE LINE)
STA 6+440.000 TO STA 6+613.890 RT (EDGE LINE)
STA 6+643.220 TO STA 6+720.000 RT (EDGE LINE)
STA 23+002.520 TO STA 23+010.000 LT (TH #25 EDGE LINE)
STA 23+002.550 TO STA 23+010.000 RT (TH #25 EDGE LINE)

TEMPORARY 100mm YELLOW LINE
STA 6+440.000 TO STA 6+622.560 LT (CENTER LINE)
STA 6+440.000 TO STA 6+622.560 RT (CENTER LINE)
STA 6+634.550 TO STA 6+720.000 LT (CENTER LINE)
STA 6+634.550 TO STA 6+720.000 RT (CENTER LINE)
STA 23+004.600 TO STA 23+010.000 LT (TH #25 CENTER LINE)
STA 23+004.600 TO STA 23+010.000 RT (TH #25 CENTER LINE)

TEMPORARY LETTER OR SYMBOL
STA 23+008.128 LT (TH #25 - "STOP")

TEMPORARY 600mm STOP BAR
STA 23+005.378 LT (TH #25 - 9M)

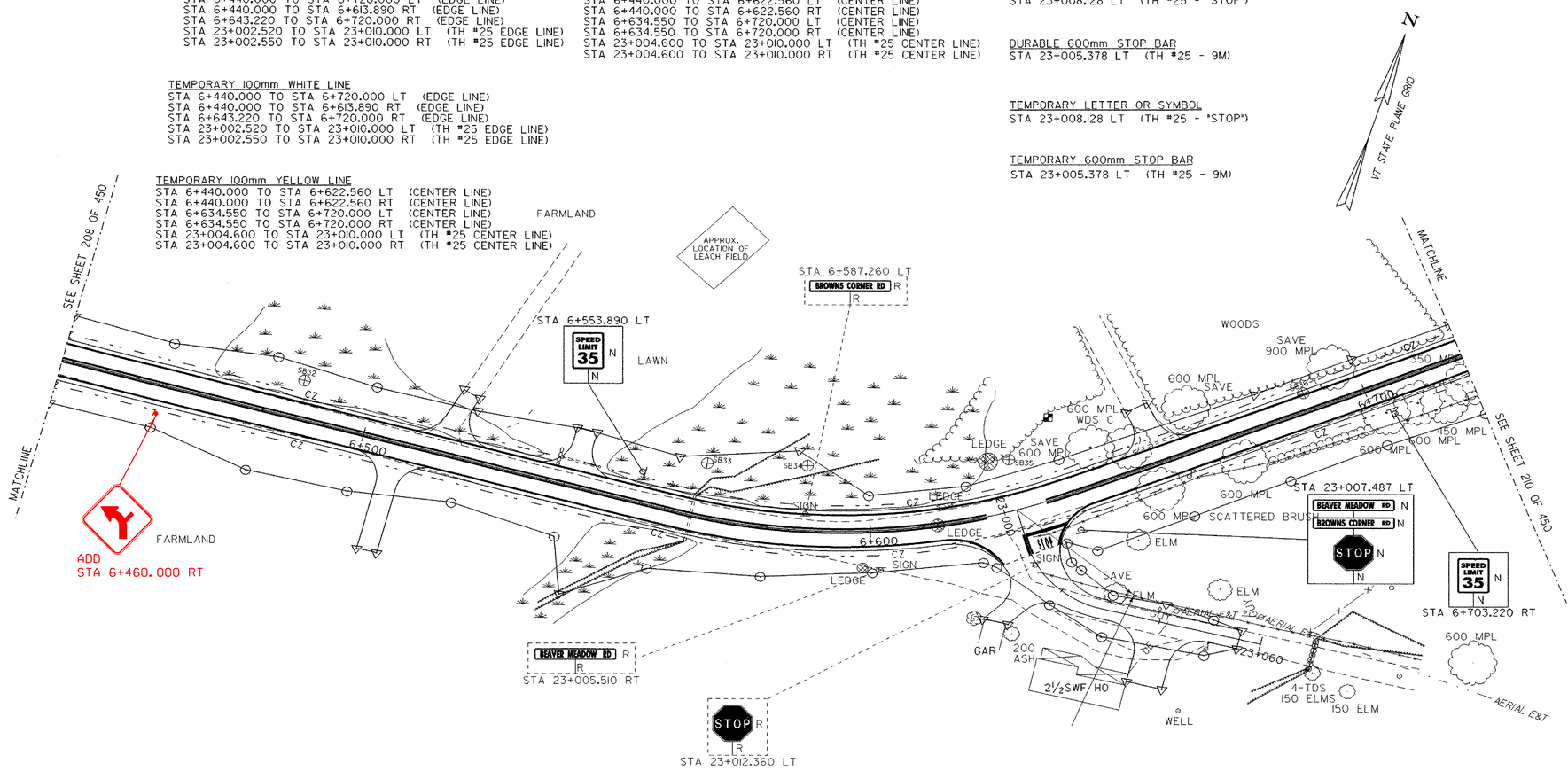

SIGN LEGEND

R = REMOVE
S = SALVAGE
N = NEW
RET = RETAIN
T&T = THINNING & TRIMMING
B-B = BACK TO BACK

TRAFFIC SIGNS & PAVEMENT MARKINGS SHEET

0 10 20 30
SCALE IN METERS

PROJECT NAME:	HIGHGATE - FRANKLIN
PROJECT NUMBER:	STP RS 0301(1) SA
FILE NAME: ...85c060/design/dc060tts.dgn	PLOT DATE: 09-MAY-2005
PROJECT LEADER: DELLASANTA	DRAWN BY: SQUAD B
DESIGNED BY: SQUAD B	CHECKED BY: SQUAD B
IPARM FILE NAME: dc060tsl7.i	SHEET 209 OF 450

DURABLE 100mm WHITE LINE
STA 6+720.000 TO STA 7+080.000 LT (EDGE LINE)
STA 6+720.000 TO STA 7+080.000 RT (EDGE LINE)

DURABLE 100mm YELLOW LINE
STA 6+720.000 TO STA 7+080.000 LT (CENTER LINE)
STA 6+720.000 TO STA 7+080.000 RT (CENTER LINE)

TEMPORARY 100mm WHITE LINE
STA 6+720.000 TO STA 7+080.000 LT (EDGE LINE)
STA 6+720.000 TO STA 7+080.000 RT (EDGE LINE)

TEMPORARY 100mm YELLOW LINE
STA 6+720.000 TO STA 7+080.000 LT (CENTER LINE)
STA 6+720.000 TO STA 7+080.000 RT (CENTER LINE)

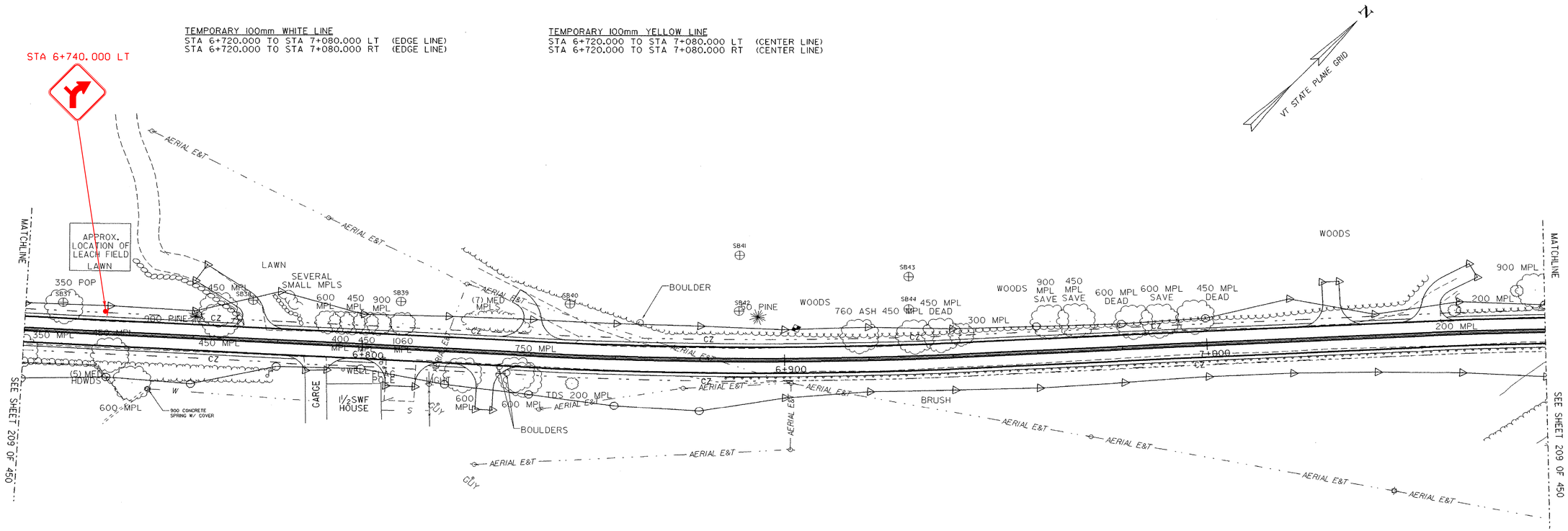

SIGN LEGEND

R = REMOVE
S = SALVAGE
N = NEW
RET = RETAIN
T&T = THINNING & TRIMMING
B-B = BACK TO BACK

TRAFFIC SIGNS & PAVEMENT MARKINGS SHEET

0 10 20 30
SCALE IN METERS

PROJECT NAME:	HIGHGATE - FRANKLIN
PROJECT NUMBER:	STP RS 0301(I)SA
FILE NAME: ...85c060/design/dc060tts.dgn	PLOT DATE: 09-MAY-2005
PROJECT LEADER: DELLASANTA	DRAWN BY: SQUAD B
DESIGNED BY: SQUAD B	CHECKED BY: SQUAD B
IPARM FILE NAME: dc060tsl8.1	SHEET 210 OF 450

DURABLE 100mm WHITE LINE

STA 7+080.000 TO STA 7+420.000 LT (EDGE LINE)
STA 7+080.000 TO STA 7+420.000 RT (EDGE LINE)

DURABLE 100mm YELLOW LINE

STA 7+080.000 TO STA 7+420.000 LT (CENTER LINE)
STA 7+080.000 TO STA 7+420.000 RT (CENTER LINE)

TEMPORARY 100mm WHITE LINE

STA 7+080.000 TO STA 7+420.000 LT (EDGE LINE)
STA 7+080.000 TO STA 7+420.000 RT (EDGE LINE)

TEMPORARY 100mm YELLOW LINE

STA 7+080.000 TO STA 7+420.000 LT (CENTER LINE)
STA 7+080.000 TO STA 7+420.000 RT (CENTER LINE)

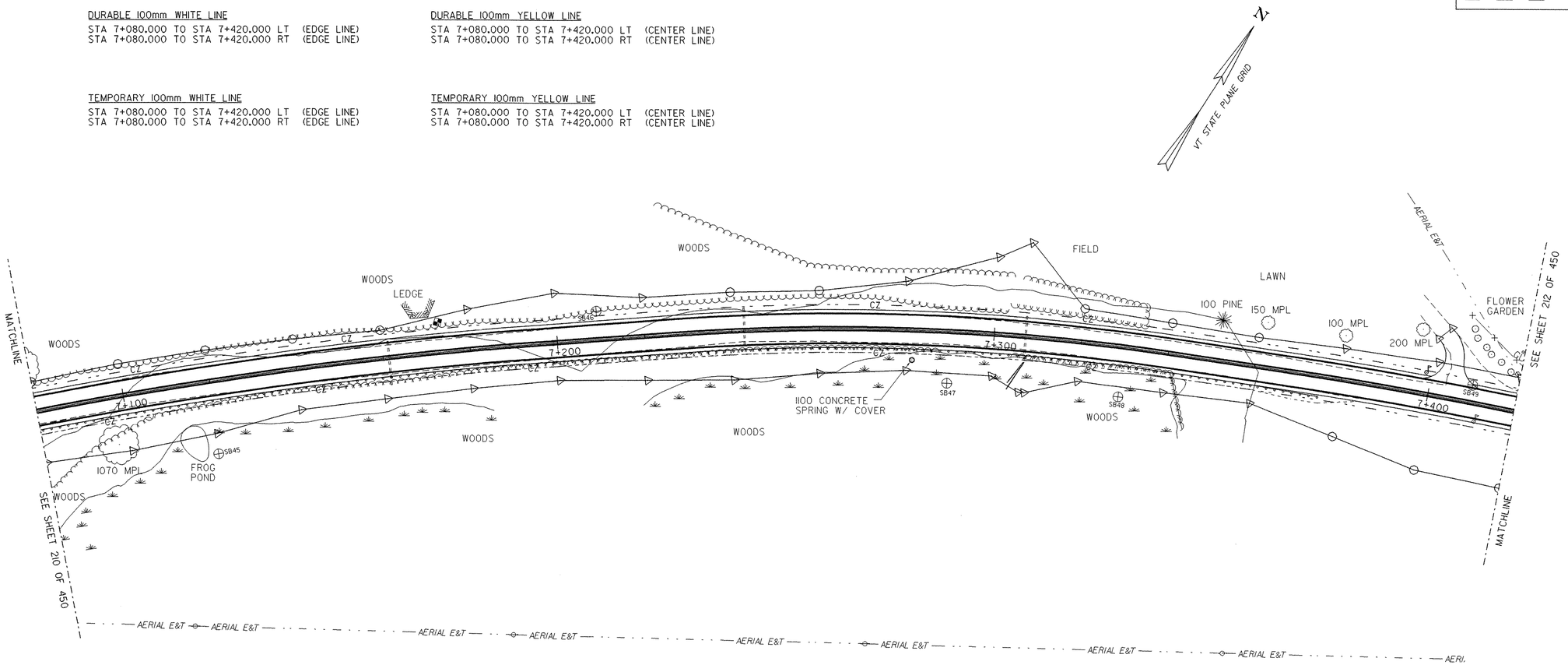

SIGN LEGEND

R = REMOVE
S = SALVAGE
N = NEW
RET = RETAIN
T&T = THINNING & TRIMMING
B-B = BACK TO BACK

TRAFFIC SIGNS & PAVEMENT MARKINGS SHEET

0 10 20 30
SCALE IN METERS

PROJECT NAME: HIGHGATE - FRANKLIN
PROJECT NUMBER: STP RS 0301(1) SA

FILE NAME: ...85c060/design/dc060tts.dgn PLOT DATE: 09-MAY-2005
PROJECT LEADER: DELLASANTA DRAWN BY: SQUAD B
DESIGNED BY: SQUAD B CHECKED BY: SQUAD B
IPARM FILE NAME: dc060tsl9.i SHEET 211 OF 450

DURABLE 100mm WHITE LINE
STA 7+420.000 TO STA 7+720.000 LT (EDGE LINE)
STA 7+420.000 TO STA 7+720.000 RT (EDGE LINE)

DURABLE 100mm YELLOW LINE
STA 7+420.000 TO STA 7+720.000 LT (CENTER LINE)
STA 7+420.000 TO STA 7+720.000 RT (CENTER LINE)

TEMPORARY 100mm WHITE LINE
STA 7+420.000 TO STA 7+720.000 LT (EDGE LINE)
STA 7+420.000 TO STA 7+720.000 RT (EDGE LINE)

TEMPORARY 100mm YELLOW LINE
STA 7+420.000 TO STA 7+720.000 LT (CENTER LINE)
STA 7+420.000 TO STA 7+720.000 RT (CENTER LINE)

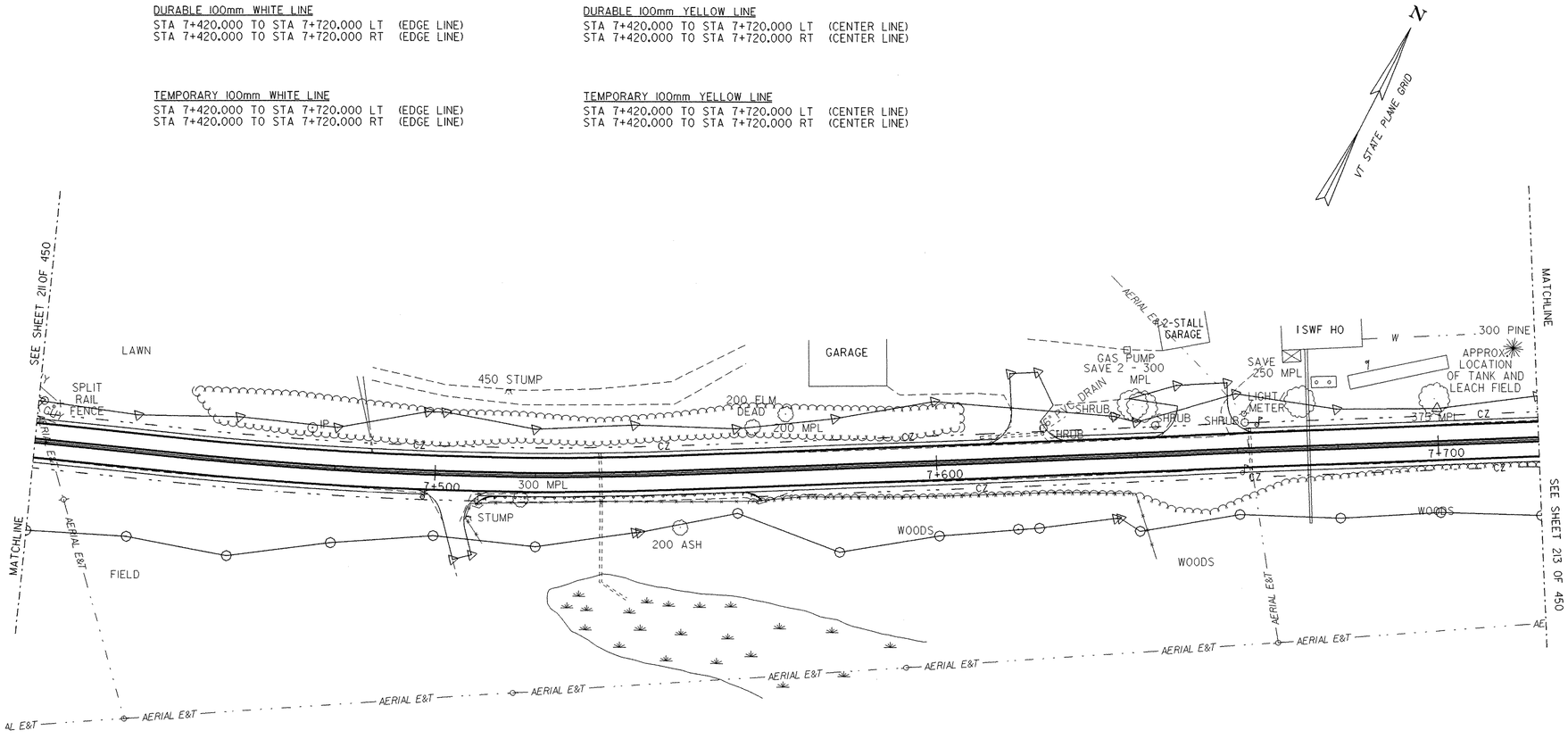

SIGN LEGEND

R = REMOVE
S = SALVAGE
N = NEW
RET = RETAIN
T&T = THINNING & TRIMMING
B-B = BACK TO BACK

TRAFFIC SIGNS & PAVEMENT MARKINGS SHEET

0 10 20 30
SCALE IN METERS

PROJECT NAME:	HIGHGATE - FRANKLIN
PROJECT NUMBER:	STP RS 0301(1) SA
FILE NAME: ...85c060/design/dc060tts.dgn	PLOT DATE: 09-MAY-2005
PROJECT LEADER: DELLASANTA	DRAWN BY: SQUAD B
DESIGNED BY: SQUAD B	CHECKED BY: SQUAD B
IPARM FILE NAME: dc060ts20.i	SHEET 212 OF 450

DURABLE 100mm WHITE LINE

STA 7+720.000 TO STA 8+040.000 LT (EDGE LINE)
STA 7+720.000 TO STA 8+040.000 RT (EDGE LINE)

DURABLE 100mm YELLOW LINE

STA 7+720.000 TO STA 8+040.000 LT (CENTER LINE)
STA 7+720.000 TO STA 8+040.000 RT (CENTER LINE)

TEMPORARY 100mm WHITE LINE

STA 7+720.000 TO STA 8+040.000 LT (EDGE LINE)
STA 7+720.000 TO STA 8+040.000 RT (EDGE LINE)

TEMPORARY 100mm YELLOW LINE

STA 7+720.000 TO STA 8+040.000 LT (CENTER LINE)
STA 7+720.000 TO STA 8+040.000 RT (CENTER LINE)

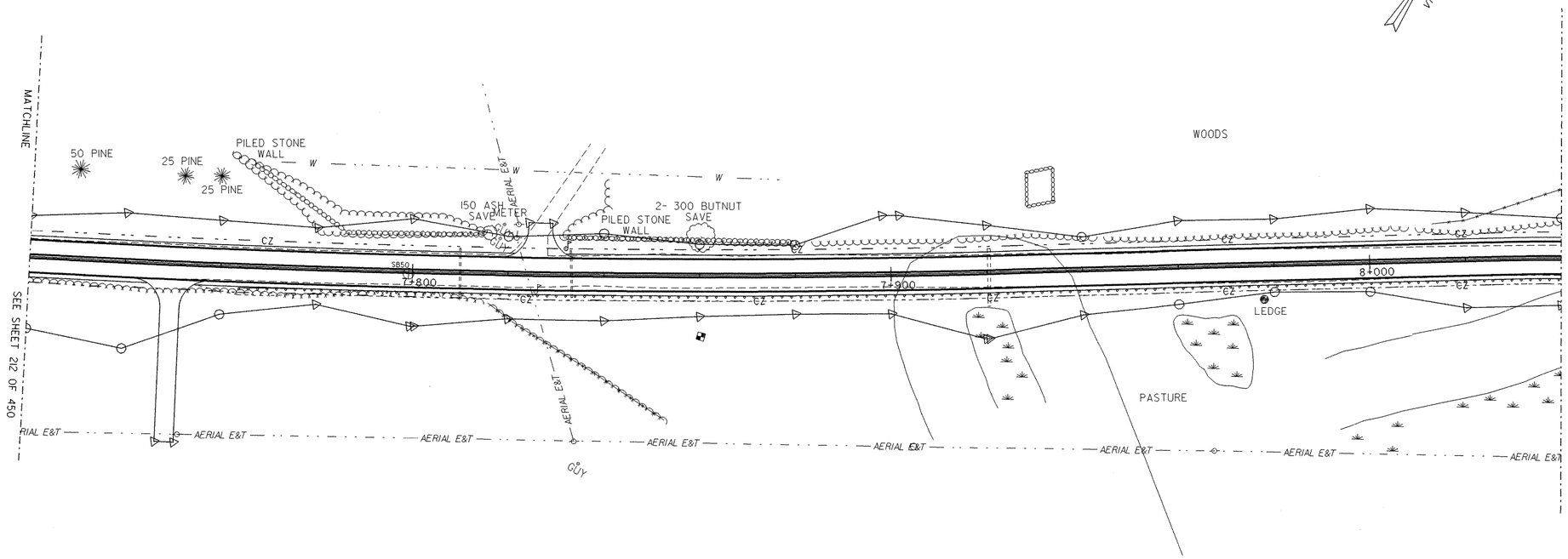

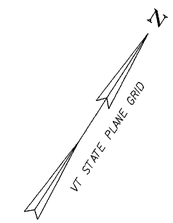

SIGN LEGEND

R = REMOVE
S = SALVAGE
N = NEW
RET = RETAIN
T&T = THINNING & TRIMMING
B-B = BACK TO BACK

TRAFFIC SIGNS & PAVEMENT MARKINGS SHEET

0 10 20 30
SCALE IN METERS

PROJECT NAME: HIGHGATE - FRANKLIN	
PROJECT NUMBER: STP RS 0301(1) SA	
FILE NAME: ...85c060/design/dc060tts.dgn	PLOT DATE: 09-MAY-2005
PROJECT LEADER: DELLASANTA	DRAWN BY: SQUAD B
DESIGNED BY: SQUAD B	CHECKED BY: SQUAD B
IPARM FILE NAME: dc060ts21.1	SHEET 213 OF 450

DURABLE 100mm WHITE LINE
STA 8+040.000 TO REV STA 8+339.720 LT (EDGE LINE)
STA 8+040.000 TO REV STA 8+339.720 RT (EDGE LINE)

DURABLE 100mm YELLOW LINE
STA 8+040.000 TO REV STA 8+339.720 LT (CENTER LINE)
STA 8+040.000 TO REV STA 8+339.720 RT (CENTER LINE)

TEMPORARY 100mm WHITE LINE
STA 8+040.000 TO REV STA 8+339.720 LT (EDGE LINE)
STA 8+040.000 TO REV STA 8+339.720 RT (EDGE LINE)

TEMPORARY 100mm YELLOW LINE
STA 8+040.000 TO REV STA 8+339.720 LT (CENTER LINE)
STA 8+040.000 TO REV STA 8+339.720 RT (CENTER LINE)

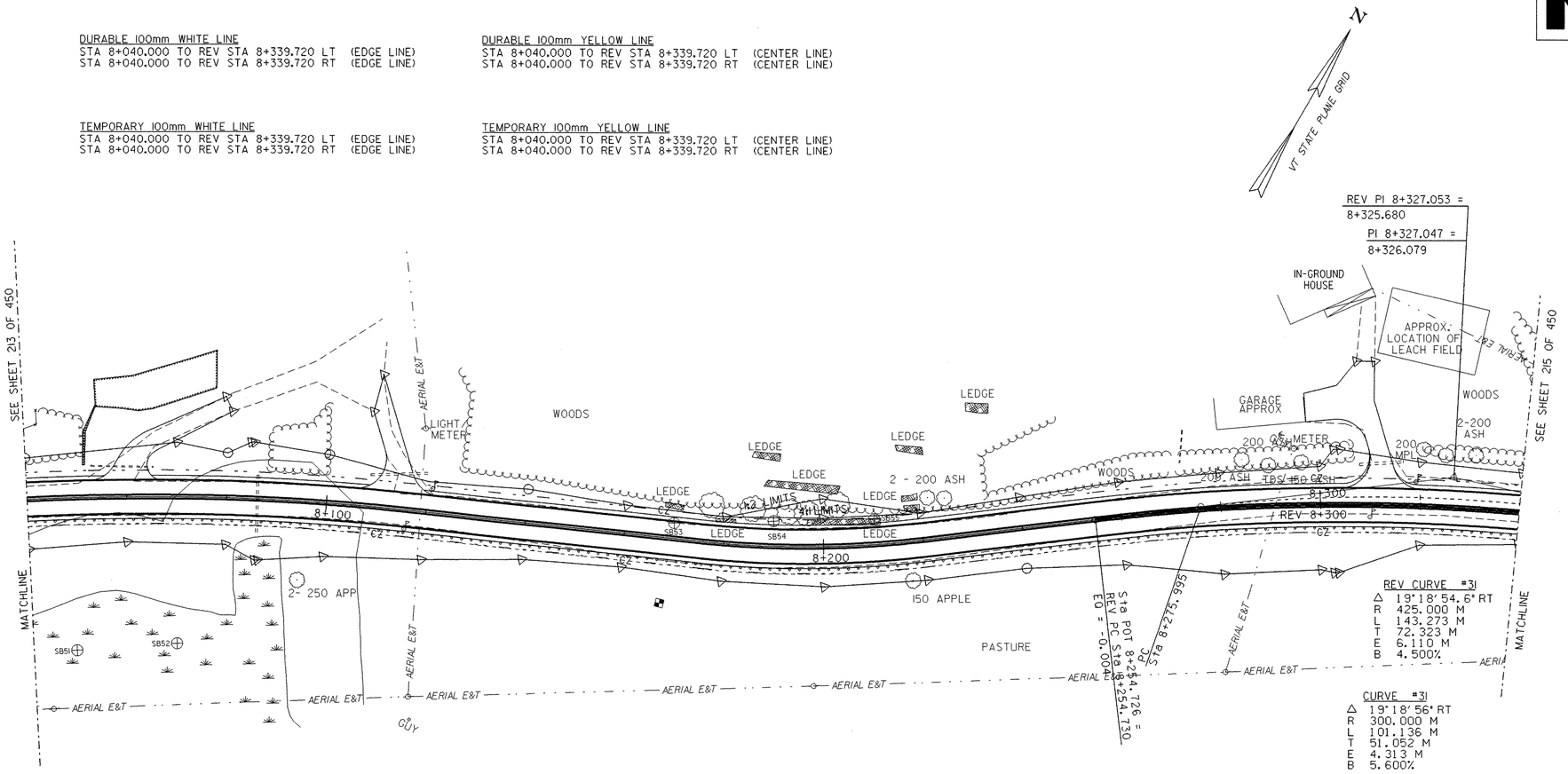

SIGN LEGEND

R = REMOVE
S = SALVAGE
N = NEW
RET = RETAIN
T&T = THINNING & TRIMMING
B-B = BACK TO BACK

TRAFFIC SIGNS & PAVEMENT MARKINGS SHEET

0 10 20 30
SCALE IN METERS

PROJECT NAME:	HIGHGATE - FRANKLIN
PROJECT NUMBER:	STP RS 0301(I) SA
FILE NAME: ...85c060/design/dc060tts.dgn	PLOT DATE: 09-MAY-2005
PROJECT LEADER: DELLASANTA	DRAWN BY: SQUAD B
DESIGNED BY: SQUAD B	CHECKED BY: SQUAD B
IPARM FILE NAME: dc060ts22.i	SHEET 214 OF 450

VAOT Metric

DURABLE 100mm WHITE LINE
REV STA 8+339.720 TO STA 8+680.000 LT (EDGE LINE)
REV STA 8+339.720 TO STA 8+680.000 RT (EDGE LINE)

DURABLE 100mm YELLOW LINE
REV STA 8+339.720 TO STA 8+680.000 LT (CENTER LINE)
REV STA 8+339.720 TO STA 8+680.000 RT (CENTER LINE)

TEMPORARY 100mm WHITE LINE
REV STA 8+339.720 TO STA 8+680.000 LT (EDGE LINE)
REV STA 8+339.720 TO STA 8+680.000 RT (EDGE LINE)

TEMPORARY 100mm YELLOW LINE
REV STA 8+339.720 TO STA 8+680.000 LT (CENTER LINE)
REV STA 8+339.720 TO STA 8+680.000 RT (CENTER LINE)

N
VT STATE PLANE GRID

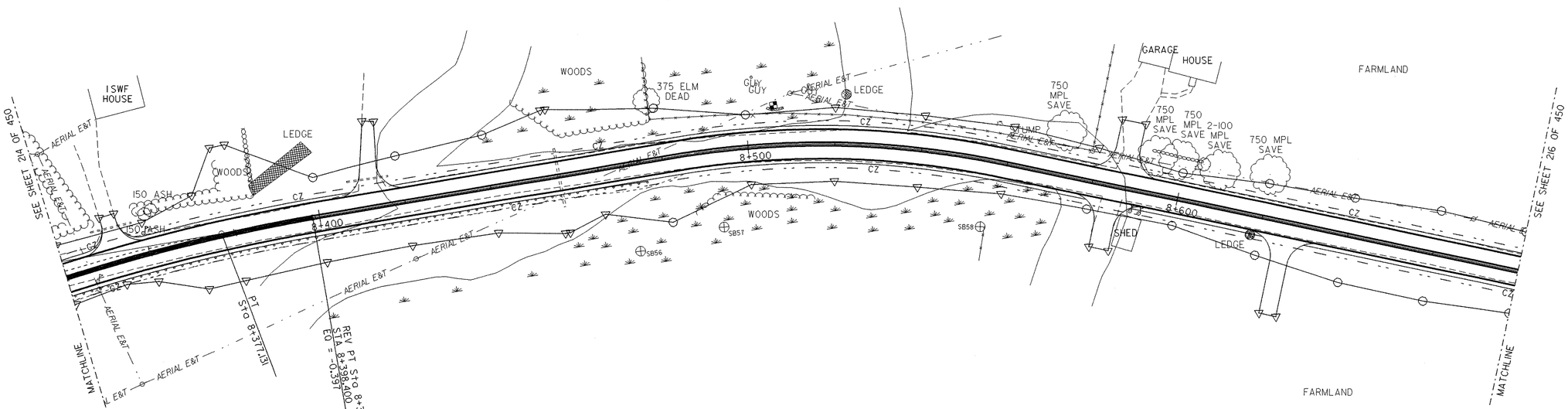

SIGN LEGEND

R = REMOVE
S = SALVAGE
N = NEW
RET = RETAIN
T&T = THINNING & TRIMMING
B-B = BACK TO BACK

TRAFFIC SIGNS & PAVEMENT MARKINGS SHEET

0 10 20 30
SCALE IN METERS

PROJECT NAME: HIGHGATE - FRANKLIN	
PROJECT NUMBER: STP RS 0301(1) SA	
FILE NAME: ...85c060/design/dc060tts.dgn	PLOT DATE: 09-MAY-2005
PROJECT LEADER: DELLASANTA	DRAWN BY: SQUAD B
DESIGNED BY: SQUAD B	CHECKED BY: SQUAD B
IPARM FILE NAME: dc060ts23.i	SHEET 215 OF 450

DURABLE 100mm WHITE LINE

STA 8+680.000 TO STA 9+020.000 LT (EDGE LINE)
STA 8+680.000 TO STA 9+020.000 RT (EDGE LINE)

DURABLE 100mm YELLOW LINE

STA 8+680.000 TO STA 9+020.000 LT (CENTER LINE)
STA 8+680.000 TO STA 9+020.000 RT (CENTER LINE)

TEMPORARY 100mm WHITE LINE

STA 8+680.000 TO STA 9+020.000 LT (EDGE LINE)
STA 8+680.000 TO STA 9+020.000 RT (EDGE LINE)

TEMPORARY 100mm YELLOW LINE

STA 8+680.000 TO STA 9+020.000 LT (CENTER LINE)
STA 8+680.000 TO STA 9+020.000 RT (CENTER LINE)

N

VT STATE PLANE GRID

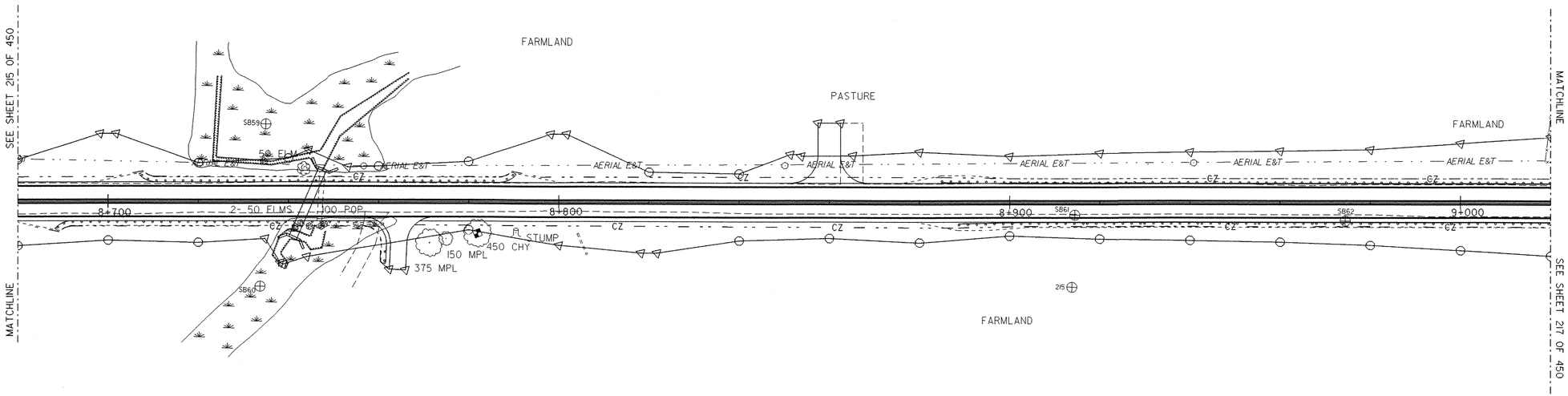

SIGN LEGEND

R = REMOVE
S = SALVAGE
N = NEW
RET = RETAIN
T&T = THINNING & TRIMMING
B-B = BACK TO BACK

TRAFFIC SIGNS & PAVEMENT MARKINGS SHEET

0 10 20 30
SCALE IN METERS

PROJECT NAME:	HIGHGATE - FRANKLIN
PROJECT NUMBER:	STP RS 0301(1) SA
FILE NAME: ...85c060/design/dc060tts.dgn	PLOT DATE: 09-MAY-2005
PROJECT LEADER: DELLASANTA	DRAWN BY: SQUAD B
DESIGNED BY: SQUAD B	CHECKED BY: SQUAD B
IPARM FILE NAME: dc060ts24.i	SHEET 216 OF 450

VAOT Metric

DURABLE 100mm WHITE LINE
STA 9+020.000 TO STA ah 14+680.000 LT (EDGE LINE)
STA 9+020.000 TO STA 9+193.500 RT (EDGE LINE)
STA 9+224.190 TO STA 9+240.910 RT (EDGE LINE)
STA 9+267.210 TO STA ah 14+680.000 RT (EDGE LINE)
STA 24+003.400 TO STA 24+026.610 LT (TH #37 EDGE LINE)
STA 24+003.400 TO STA 24+026.610 RT (TH #37 EDGE LINE)
STA 25+003.230 TO STA 25+019.208 LT (TH #21 EDGE LINE)
STA 25+003.230 TO STA 25+019.208 RT (TH #21 EDGE LINE)

DURABLE 100mm YELLOW LINE
STA 9+020.000 TO STA 9+203.030 LT (CENTER LINE)
STA 9+020.000 TO STA 9+203.030 RT (CENTER LINE)
STA 9+215.030 TO STA 9+248.100 LT (CENTER LINE)
STA 9+215.030 TO STA 9+248.100 RT (CENTER LINE)
STA 9+260.000 TO STA ah 14+680.000 LT (CENTER LINE)
STA 9+260.000 TO STA ah 14+680.000 RT (CENTER LINE)
STA 24+005.500 TO STA 24+026.610 LT (TH #37 CENTER LINE)
STA 24+005.500 TO STA 24+026.610 RT (TH #37 CENTER LINE)
STA 25+005.500 TO STA 25+019.208 LT (TH #21 CENTER LINE)
STA 25+005.500 TO STA 25+019.208 RT (TH #21 CENTER LINE)

DURABLE LETTER OR SYMBOL
STA 24+008.610 LT (TH #37 - "STOP")
STA 25+008.550 LT (TH #21 - "STOP")

TEMPORARY LETTER OR SYMBOL
STA 24+008.610 LT (TH #37 - "STOP")
STA 25+008.550 LT (TH #21 - "STOP")

TEMPORARY 100mm WHITE LINE
STA 9+020.000 TO STA ah 14+680.000 LT (EDGE LINE)
STA 9+020.000 TO STA 9+193.500 RT (EDGE LINE)
STA 9+224.190 TO STA 9+240.910 RT (EDGE LINE)
STA 9+267.210 TO STA ah 14+680.000 RT (EDGE LINE)
STA 24+003.400 TO STA 24+026.610 LT (TH #37 EDGE LINE)
STA 24+003.400 TO STA 24+026.610 RT (TH #37 EDGE LINE)
STA 25+003.230 TO STA 25+019.208 LT (TH #21 EDGE LINE)
STA 25+003.230 TO STA 25+019.208 RT (TH #21 EDGE LINE)

TEMPORARY 100mm YELLOW LINE
STA 9+020.000 TO STA 9+203.030 LT (CENTER LINE)
STA 9+020.000 TO STA 9+203.030 RT (CENTER LINE)
STA 9+215.030 TO STA 9+248.100 LT (CENTER LINE)
STA 9+215.030 TO STA 9+248.100 RT (CENTER LINE)
STA 9+260.000 TO STA ah 14+680.000 LT (CENTER LINE)
STA 9+260.000 TO STA ah 14+680.000 RT (CENTER LINE)
STA 24+005.500 TO STA 24+026.610 LT (TH #37 CENTER LINE)
STA 24+005.500 TO STA 24+026.610 RT (TH #37 CENTER LINE)
STA 25+005.500 TO STA 25+019.208 LT (TH #21 CENTER LINE)
STA 25+005.500 TO STA 25+019.208 RT (TH #21 CENTER LINE)

DURABLE 600mm STOP BAR
STA 24+005.860 LT (TH #37 - 10M)
STA 25+005.800 LT (TH #21 - 7M)

TEMPORARY 600mm STOP BAR
STA 24+005.860 LT (TH #37 - 10M)
STA 25+005.800 LT (TH #21 - 7M)

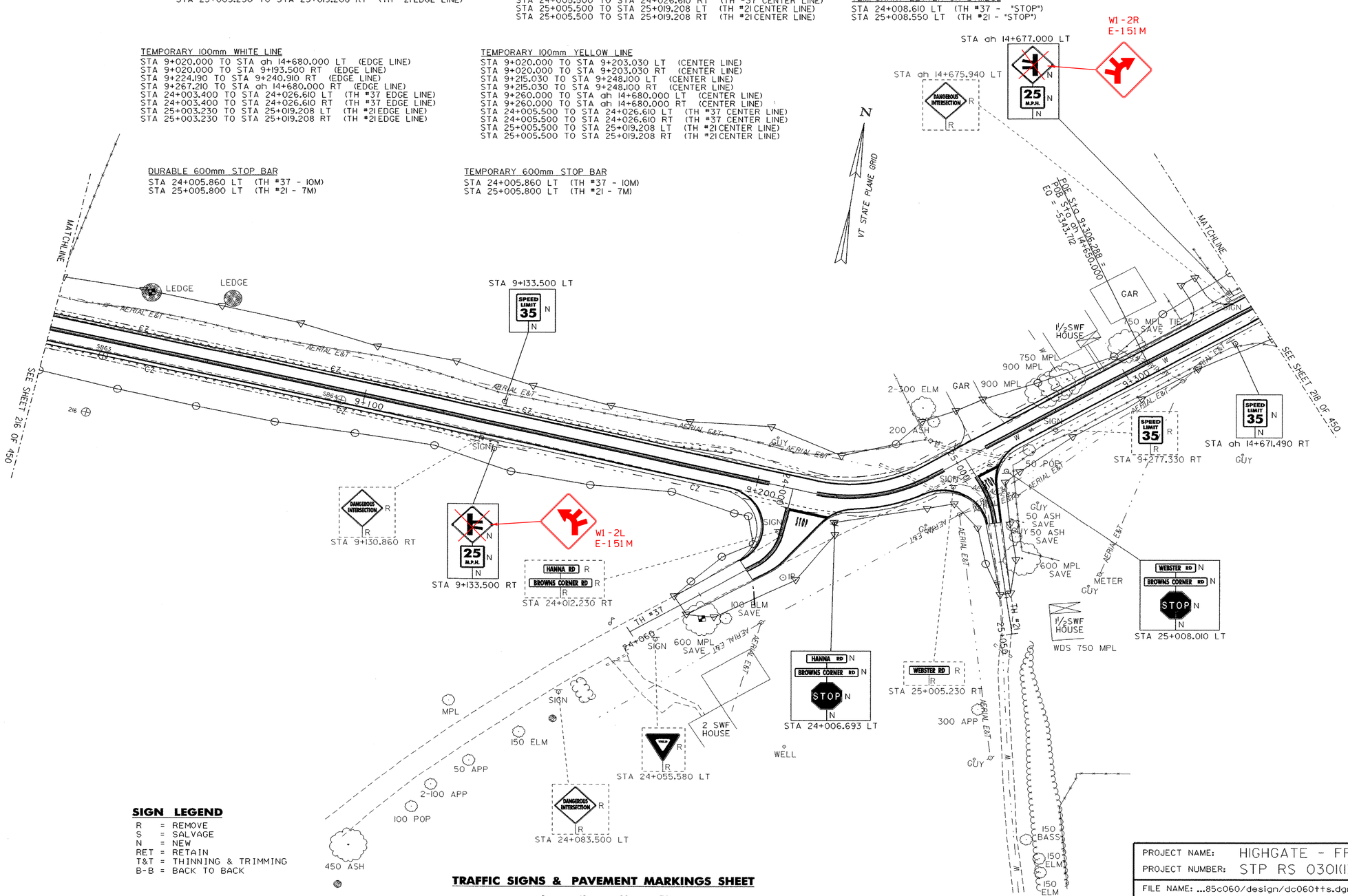

SIGN LEGEND

R = REMOVE
S = SALVAGE
N = NEW
RET = RETAIN
T&T = THINNING & TRIMMING
B-B = BACK TO BACK

TRAFFIC SIGNS & PAVEMENT MARKINGS SHEET

0 10 20 30
SCALE IN METERS

PROJECT NAME: HIGHGATE - FRANKLIN
PROJECT NUMBER: STP RS 0301(I) SA

FILE NAME: ...85c060/design/dc060tts.dgn
PROJECT LEADER: DELLASANTA
DESIGNED BY: SQUAD B
IPARM FILE NAME: dc060tts25.i
PLOT DATE: 09-MAY-2005
DRAWN BY: SQUAD B
CHECKED BY: SQUAD B
SHEET 217 OF 450

DURABLE 100mm WHITE LINE
STA ah 14+680.000 TO STA ah 15+034.000 LT (EDGE LINE)
STA ah 14+680.000 TO STA ah 15+034.000 RT (EDGE LINE)

DURABLE 100mm YELLOW LINE
STA ah 14+680.000 TO STA ah 15+034.000 LT (CENTER LINE)
STA ah 14+680.000 TO STA ah 15+034.000 RT (CENTER LINE)

TEMPORARY 100mm WHITE LINE
STA ah 14+680.000 TO STA ah 15+034.000 LT (EDGE LINE)
STA ah 14+680.000 TO STA ah 15+034.000 RT (EDGE LINE)

TEMPORARY 100mm YELLOW LINE
STA ah 14+680.000 TO STA ah 15+034.000 LT (CENTER LINE)
STA ah 14+680.000 TO STA ah 15+034.000 RT (CENTER LINE)

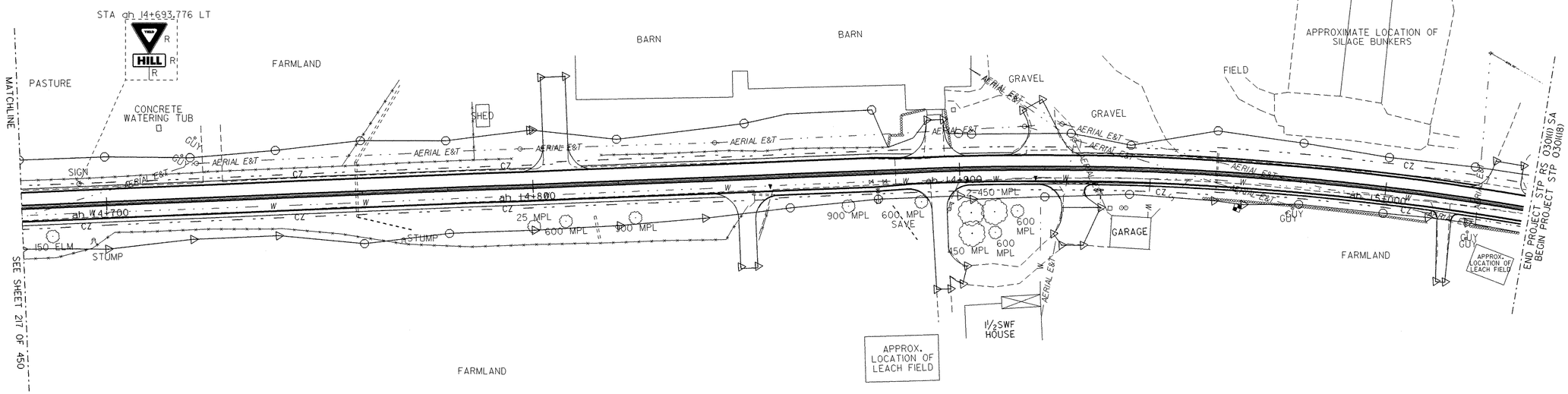

SIGN LEGEND

R = REMOVE
S = SALVAGE
N = NEW
RET = RETAIN
T&T = THINNING & TRIMMING
B-B = BACK TO BACK

TRAFFIC SIGNS & PAVEMENT MARKINGS SHEET

0 10 20 30
SCALE IN METERS

PROJECT NAME:	HIGHGATE - FRANKLIN
PROJECT NUMBER:	STP RS 030I(I) SA
FILE NAME: ...85c060/design/dc060tts.dgn	PLOT DATE: 09-MAY-2005
PROJECT LEADER: DELLASANTA	DRAWN BY: SQUAD B
DESIGNED BY: SQUAD B	CHECKED BY: SQUAD B
IPARM FILE NAME: dc060ts26.i	SHEET 218 OF 450

STATE OF VERMONT
AGENCY OF TRANSPORTATION

TRAFFIC SIGN SUMMARY SHEET

Metric

KILOMETER MARKER, STATION, OR SIGN NUMBER	SIGN LEGEND	SIGN DIMENSIONS EA	SIGN DIMENSIONS WIDTH (mm)	SIGN DIMENSIONS HEIGHT (mm)	NEW & SALVAGED SIGNS "A"	NEW & SALVAGED SIGNS "B"	NEW & SALVAGED SIGNS SALV SIGN	NEW & SALVAGED SIGNS SALV TIS	EXIST POST RETAIN	EXIST POST SALVAGE	NO. OF POSTS	FLANGED CHANNEL kg/m 1.7	FLANGED CHANNEL kg/m 3.0	FLANGED CHANNEL kg/m 4.5	SQUARE STEEL (mm) 44 kg/m 3.4	SQUARE STEEL (mm) 50 kg/m 3.9	SQUARE STEEL (mm) 63 kg/m 5.0	ANCHOR	SLEEVE	TUBULAR ALUMINUM Ø (mm) 75 kg/m 1.9	TUBULAR ALUMINUM Ø (mm) 100 kg/m 2.5	TUBULAR ALUMINUM Ø (mm) 100 MOD kg/m 2.5	FOUNDATION	TUBULAR STEEL Ø (mm) 75 kg/m 11.3	TUBULAR STEEL Ø (mm) 89 kg/m 13.4	TUBULAR STEEL Ø (mm) 100 kg/m 16.1	TUBULAR STEEL Ø (mm) 125 kg/m 21.7	W-SHAPE STEEL FTG. SIZE 600 mm	W-SHAPE STEEL FTG. SIZE 750 mm	W-SHAPE STEEL WEIGHT	W-SHAPE STEEL POST SIZE	SIGN FRAME REQUIRED	REMARKS	SIGN DETAIL DETAIL ON SHEET NUMBER	SIGN DETAIL STD. SHEET NUMBER
•EXISTING STOP SLAVAGED FOR SHORT DURATION												OPTION ITEMS																							
HIGHGATE 1+006.410 LT	TH3 FRANKLIN STOP 0780 0609 0468	1	750/ 150	750/ 200	0.56/ 0.03		2 +				3.96 1			X			X																	A POST-TOP MOUNTING BRACKET WILL BE REQUIRED. MOUNT 300mm ABOVE AND PERPENDICULAR TO STOP SIGN		E-143M/ E-138M
1+040.000 RT	LEGAL LOAD LIMIT 24,000 POUNDS						1				3.96																								
1+060.000 RT	SPEED LIMIT 35	1	600	750	0.45						3.96 1			X			X																		E-142M
1+160.000 LT		1	750	750	0.56						4.57 1			X			X																		E-150
1+526.990 LT	SPEED LIMIT 35	1	600	750	0.45						4.27 1			X			X																		E-142M
2+100.000 RT	25 M.P.H.	1	600	600	0.36						4.27 1			X			X																		E-155
2+305.000 LT	SPEED LIMIT 35	1	600	750	0.45						4.27 1			X			X																		E-142M
2+371.540 LT	TPH60 WHISPERING PINE	1	230	1050	0.24		+				3.66 1			X			X																		
												m	m	m	m	m	m		EA	kg	kg	kg		kg	kg	kg	kg								
	TOTALS				m² 3.10 ~~2.86~~	m²	EA. 3 ~~2~~	m²				m 32.92 ~~34~~			m ~~34~~					kg			EA.	kg				EA.	EA.	kg					

FINAL POST LENGTHS ARE TO BE DETERMINED IN THE FIELD. POST SIZES ARE COMPUTED BASED ON INFORMATION FURNISHED ON THE STANDARD SHEETS AND THE TRAFFIC & SAFETY DIVISION'S "SIGN POST DESIGN GUIDELINE."

PROJECT NAME: HIGHGATE - FRANKLIN
PROJECT NUMBER: STP RS 0301(1) SA

FILE NAME: ...85c060/design/dc060frm.dgn
PROJECT LEADER: DELLASANTA
DESIGNED BY: SQUAD B
IPARM FILE NAME: dc060ssl.i
PLOT DATE: 09-MAY-2005
DRAWN BY: SQUAD B
CHECKED BY: SQUAD B
SHEET 219 OF 450

STATE OF VERMONT
AGENCY OF TRANSPORTATION

TRAFFIC SIGN SUMMARY SHEET

MUTCD Metric

KILOMETER MARKER, STATION, OR SIGN NUMBER	SIGN LEGEND	SIGN DIMENSIONS EA	WIDTH (mm)	HEIGHT (mm)	NEW & SALVAGED SIGNS "A"	"B"	SALV SIGN	SALV TIS	EXIST POST RETAIN	EXIST POST SALVAGE	NO. OF POSTS	NEW SIGN POSTS: FLANGED CHANNEL kg/m 1.7	3.0	4.5	SQUARE STEEL (mm) kg/m 44 3.4	50 3.9	63 5.0	ANCHOR	SLEEVE	TUBULAR ALUMINUM Ø (mm) kg/m 75 1.9	100 2.5	100 MOD 2.5	TUBULAR STEEL Ø (mm) FOUND-ATION	75 11.3	89 13.4	100 16.1	125 21.7	W-SHAPE STEEL FTG. SIZE 600 mm	750 mm	WEIGHT	POST SIZE	SIGN FRAME REQUIRED	REMARKS	SIGN DETAIL DETAIL ON SHEET NUMBER	STD. SHEET NUMBER
												OPTION ITEMS																								
2+915.000 LT	25 M.P.H.	1	600	600	0.36						1			4.27 X			X																		E-155
3+300.000 LT	SPEED LIMIT 35	1	600	750	0.45						1			4.27 X			X																		E-142M
3+300.000 RT	25 M.P.H.	1	600	600	0.36						1			4.27 X			X																		E-155
900.000 3+~~740.000~~ RT	SPEED LIMIT 35	1	600	750	0.45						1			4.27 X			X																		E-142M
20+016.887 LT	TH32 CASSIDY TH3 FRANKLIN STOP	1 2	750 230	750 750	0.56 0.34		~~2~~				1			3.96 X			X																	A POST-TOP MOUNTING BRACKET WILL BE REQUIRED. MOUNT 300mm ABOVE AND PERPENDICULAR TO STOP SIGN		E-143M
3+760.630 LT	25 M.P.H.	1	600	600	0.36						1			4.27 X			X																		E-155
3+911.880 LT	25 M.P.H.	1	750/ 600	750/ 600	0.56/ 0.36						1			4.88 X			X																		224 E-155
4+383.020 RT	BROWNS CORNER RD	1	230	1050	0.24						1			3.66 X			X																		E-123
4+447.000 RT	INSTALLED THEN RELOCATED BROWNS CORNER RD						1							4.27 X																					
TOTALS					m² ~~4.04~~ ~~3.70~~	m²	EA. ~~2~~ 1	m²			m ~~38.12~~ ~~34~~				m ~~34~~				EA.	kg			EA.	kg				EA.	EA.	kg					

FINAL POST LENGTHS ARE TO BE DETERMINED IN THE FIELD. POST SIZES ARE COMPUTED BASED ON INFORMATION FURNISHED ON THE STANDARD SHEETS AND THE TRAFFIC & SAFETY DIVISION'S "SIGN POST DESIGN GUIDELINE."

PROJECT NAME: HIGHGATE - FRANKLIN
PROJECT NUMBER: STP RS 0301(I) SA

FILE NAME: ...85c060/design/dc060frm.dgn PLOT DATE: 09-MAY-2005
PROJECT LEADER: DELLASANTA DRAWN BY: SQUAD B
DESIGNED BY: SQUAD B CHECKED BY: SQUAD B
IPARM FILE NAME: dc060ss2.i SHEET 220 OF 450

STATE OF VERMONT
AGENCY OF TRANSPORTATION

TRAFFIC SIGN SUMMARY SHEET

MAY Metric

KILOMETER MARKER, STATION, OR SIGN NUMBER	SIGN LEGEND	SIGN DIMENSIONS EA	WIDTH (mm)	HEIGHT (mm)	NEW & SALVAGED SIGNS "A"	"B"	SALV SIGN	SALV TIS	EXIST POST RETAIN	EXIST POST SALVAGE	NO. OF POSTS	NEW SIGN POSTS: FLANGED CHANNEL kg/m 1.7	3.0	4.5	SQUARE STEEL (mm) kg/m 44 3.4	50 3.9	63 5.0	ANCHOR	SLEEVE	TUBULAR ALUMINUM Ø (mm) kg/m 75 1.9	100 2.5	100 MOD 2.5	TUBULAR STEEL Ø (mm) FOUNDATION	kg/m 75 11.3	89 13.4	100 16.1	125 21.7	W-SHAPE STEEL FTG. SIZE 600 mm	750 mm	WEIGHT	POST SIZE	SIGN FRAME REQUIRED	REMARKS	SIGN DETAIL DETAIL ON SHEET NUMBER	STD. SHEET NUMBER
												OPTION ITEMS																									
FRANKLIN 4+~~400.000~~ 383.380 LT	HIGHGATE / FRANKLIN	1	230	1050	0.24		+				1			3.96 X			X																			E-124M
5+329.969 LT	SPEED LIMIT 35	1	600	750	0.45						1			4.27 X			X																			E-142M
5+329.969 RT	25 M.P.H.	1	750/ 600	750/ 600	0.56/ 0.36						1			4.88 X			X																			E-155/ E-155
5+369.969 RT	SCHOOL BUS STOP AHEAD	1	750	750	0.56						1			4.57 X			X																			E-153
5+449.969 RT		1	750	750	0.56						1			4.57 X			X																		SEE DETAIL	224	
22+004.580 LT	BARNUM RD / BROWNS CORNER RD; STOP 3-WAY	1	230/ 230/ 750/ 450	750/ 1050/ 750/ 225	0.17/ 0.24/ 0.56/ 0.10						1			4.27 X			X																		A POST-TOP MOUNTING BRACKET WILL BE REQUIRED. MOUNT 300mm ABOVE AND PERPENDICULAR TO STOP SIGN	224	E-123/ E-123/ E-143M
21+007.487 LT	DURKEE RD / BROWNS CORNER RD; STOP 3-WAY	1	230/ 230/ 750/ 450	600/ 1050/ 750/ 225	0.14/ 0.24/ 0.56/ 0.10						1			3.96 X			X																		A POST-TOP MOUNTING BRACKET WILL BE REQUIRED. MOUNT 300mm ABOVE AND PERPENDICULAR TO STOP SIGN	224	E-123/ E-123/ E-143M

FINAL POST LENGTHS ARE TO BE DETERMINED IN THE FIELD. POST SIZES ARE COMPUTED BASED ON INFORMATION FURNISHED ON THE STANDARD SHEETS AND THE TRAFFIC & SAFETY DIVISION'S "SIGN POST DESIGN GUIDELINE."

	m	m	m	m	m	m		EA	kg	kg	kg		kg	kg	kg	kg			
TOTALS			m 30.48 ~~34~~			m ~~34~~			kg			EA.	kg				EA.	EA.	kg
	m² 4.84 ~~4.60~~	m²	EA. 0 +	m²															

PROJECT NAME: HIGHGATE - FRANKLIN
PROJECT NUMBER: STP RS 0301(I) SA

FILE NAME: ...85c060/design/dc060frm.dgn
PROJECT LEADER: DELLASANTA
DESIGNED BY: SQUAD B
IPARM FILE NAME: dc060ss3.i
PLOT DATE: 09-MAY-2005
DRAWN BY: SQUAD B
CHECKED BY: SQUAD B
SHEET 221 OF 450

STATE OF VERMONT
AGENCY OF TRANSPORTATION

TRAFFIC SIGN SUMMARY SHEET

MUTCD Metric

KILOMETER MARKER, STATION, OR SIGN NUMBER	SIGN LEGEND	SIGN DIMENSIONS EA	WIDTH (mm)	HEIGHT (mm)	NEW & SALVAGED SIGNS "A"	"B"	SALV SIGN	SALV TIS	EXIST POST RETAIN	EXIST POST SALVAGE	NO. OF POSTS	NEW SIGN POSTS: FLANGED CHANNEL kg/m 1.7	3.0	4.5	SQUARE STEEL (mm) 44 kg/m 3.4	50 kg/m 3.9	63 kg/m 5.0	ANCHOR	SLEEVE	TUBULAR ALUMINUM Ø (mm) 75 kg/m 1.9	100 kg/m 2.5	100 MOD kg/m 2.5	TUBULAR STEEL Ø (mm) FOUNDATION	75 kg/m 11.3	89 kg/m 13.4	100 kg/m 16.1	125 kg/m 21.7	W-SHAPE STEEL FTG. SIZE 600 mm	750 mm	WEIGHT	POST SIZE	SIGN FRAME REQUIRED	REMARKS	SIGN DETAIL DETAIL ON SHEET NUMBER	STD. SHEET NUMBER
												OPTION ITEMS																									
5+520.775 LT	STOP 3-WAY	1	750/ 450	750/ 225	0.56/ 0.10						1			4.27 X			X																		224	E-143M
5+580.775 LT		1	750	750	0.56						1			4.57 X			X																		224	
5+620.775 LT		1	750	750	0.56						1			4.88 X			X																			E-150
6+460.000 RT		1	750	750	0.56									4.57 X																						
5+680.000 RT	SPEED LIMIT 35	1	600	750	0.45						1			4.27 X			X																			E-142M
6+553.890 LT	SPEED LIMIT 35	1	600	750	0.45						1			4.27 X			X																			E-142M
23+007.487 LT	BEAVER MEADOW RD / BROWNS CORNER RD STOP	1	230/ 230/ 750	1050/ 1050/ 750	0.24/ 0.24/ 0.56						1			3.96 X			X																		A POST-TOP MOUNTING BRACKET WILL BE REQUIRED. MOUNT 300mm ABOVE AND PERPENDICULAR TO STOP SIGN		E-123/ E-123/ E-143M
												m	m	m	m	m	m	EA	kg	kg	kg		kg	kg	kg	kg									
TOTALS					m² 4.28 ~~4.84~~	m²	EA. 0	m²				m 30.79 ~~34~~			m ~~34~~				kg			EA.	kg				EA.	EA.	kg						

FINAL POST LENGTHS ARE TO BE DETERMINED IN THE FIELD. POST SIZES ARE COMPUTED BASED ON INFORMATION FURNISHED ON THE STANDARD SHEETS AND THE TRAFFIC & SAFETY DIVISION'S "SIGN POST DESIGN GUIDELINE."

PROJECT NAME: HIGHGATE - FRANKLIN
PROJECT NUMBER: STP RS 0301(1) SA

FILE NAME: ...85c060/design/dc060frm.dgn PLOT DATE: 09-MAY-2005
PROJECT LEADER: DELLASANTA DRAWN BY: SQUAD B
DESIGNED BY: SQUAD B CHECKED BY: SQUAD B
IPARM FILE NAME: dc060ss4.i SHEET 222 OF 450

STATE OF VERMONT
AGENCY OF TRANSPORTATION

TRAFFIC SIGN SUMMARY SHEET

MUTCD Metric

KILOMETER MARKER, STATION, OR SIGN NUMBER	SIGN LEGEND	SIGN DIMENSIONS EA	WIDTH (mm)	HEIGHT (mm)	NEW & SALVAGED SIGNS "A"	"B"	SALV SIGN	SALV TIS	EXIST POST RETAIN	EXIST POST SALVAGE	NO. OF POSTS	NEW SIGN POSTS: FLANGED CHANNEL kg/m 1.7	3.0	4.5	SQUARE STEEL (mm) kg/m 44 3.4	50 3.9	63 5.0	ANCHOR	SLEEVE	TUBULAR ALUMINUM Ø (mm) kg/m 75 1.9	100 2.5	100 MOD 2.5	TUBULAR STEEL Ø (mm) FOUNDATION	kg/m 75 11.3	89 13.4	100 16.1	125 21.7	W-SHAPE STEEL FTG. SIZE 600 mm	750 mm	WEIGHT	POST SIZE	SIGN FRAME REQUIRED	REMARKS	SIGN DETAIL DETAIL ON SHEET NUMBER	STD. SHEET NUMBER
												OPTION ITEMS																								
6+703.220 RT	SPEED LIMIT 35	1	600	750	0.45						1			4.27 X			X																		E-142M
6+740.000 LT		1	750	750	0.56									4.88 X																					
9+133.500 LT	SPEED LIMIT 35	1	600	750	0.45						1			4.57 X			X																		E-142M
9+133.500 RT	25 M.P.H.	1	750/ 600	750/ 600	0.56/ 0.36						1			4.88 X			X																	224	E-151M/ E-155
	W1-2L																																		
24+006.693 LT	HANNA RD / BROWNS CORNER RD STOP	1	230/ 230/ 750	600/ 1050/ 750	0.14/ 0.24/ 0.56						1			3.96 X			X																	A POST-TOP MOUNTING BRACKET WILL BE REQUIRED. MOUNT 300mm ABOVE AND PERPENDICULAR TO STOP SIGN		E-123/ E-123/ E-143M
25+008.010 LT	WEBSTER RD / BROWNS CORNER RD STOP	1	230/ 230/ 750	750/ 1050/ 750	0.17/ 0.24/ 0.56						1			3.96 X			X																	A POST-TOP MOUNTING BRACKET WILL BE REQUIRED. MOUNT 300mm ABOVE AND PERPENDICULAR TO STOP SIGN		E-123/ E-123/ E-143M
ah 14+671.490 RT	SPEED LIMIT 35	1	600	750	0.45						1			4.27 X			X																		E-142M
ah 14+677.000 LT	25 M.P.H.	1	750/ 600	750/ 600	0.56/ 0.36						1			4.88 X			X																	224	E-151M/ E-155
	W1-2R																																		
	SHEET 1 TOTAL			3.10	~~2.86~~		3 ~~2~~							32.92 ~~34~~			~~34~~																		
	SHEET 2 TOTAL			4.04	~~3.70~~		1 ~~2~~							38.12 ~~34~~			~~34~~																		
	SHEET 3 TOTAL			4.84	~~4.6~~		0 ~~1~~							30.48 ~~34~~			~~34~~																		
	SHEET 4 TOTAL			4.28	~~4.84~~		0							30.79 ~~34~~			~~34~~																		
	SHEET 5 TOTAL			5.66	~~5.1~~		0							35.67 ~~30~~			~~30~~																		
												m	m	m	m	m	m		EA	kg	kg	kg		kg	kg	kg	kg								
	TOTALS				m² 21.92 ~~20.54~~	m²	EA. 4 ~~5~~	m²				m 167.98 ~~166~~			m ~~166~~					kg			EA.	kg				EA.	EA.	kg					

FINAL POST LENGTHS ARE TO BE DETERMINED IN THE FIELD. POST SIZES ARE COMPUTED BASED ON INFORMATION FURNISHED ON THE STANDARD SHEETS AND THE TRAFFIC & SAFETY DIVISION'S "SIGN POST DESIGN GUIDELINE."

TO BK1-B PG. 32 | TO BK1-B PG. 44 | TO BK1-B PG. 36

PROJECT NAME: HIGHGATE - FRANKLIN
PROJECT NUMBER: STP RS 0301(1) SA

FILE NAME: ...85c060/design/dc060frm.dgn PLOT DATE: 09-MAY-2005
PROJECT LEADER: DELLASANTA DRAWN BY: SQUAD B
DESIGNED BY: SQUAD B CHECKED BY: SQUAD B
IPARM FILE NAME: dc060ss5.I SHEET 223 OF 450

TRAFFIC SIGN DETAILS

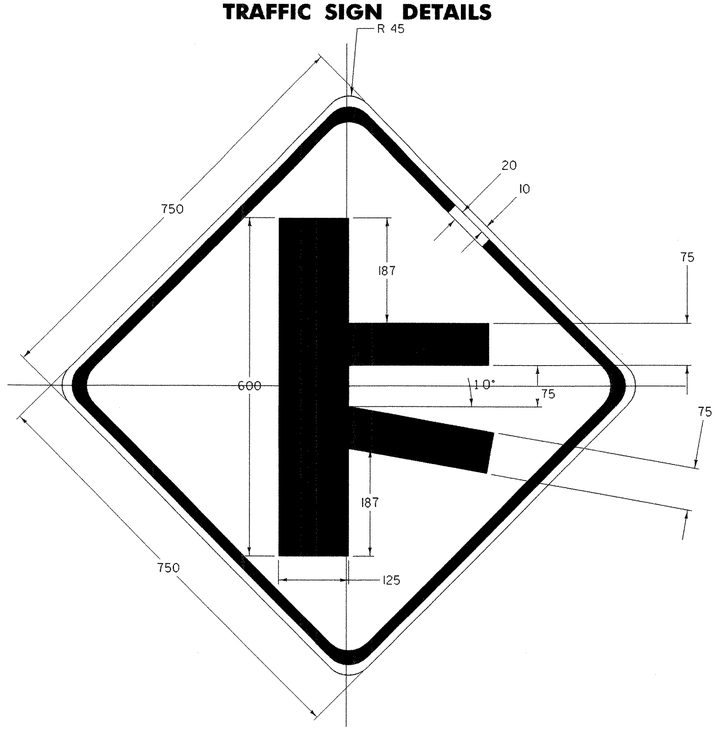

COLORS: SYMBOL & BORDER - BLACK
BACKGROUND - YELLOW (REFLECTIVE)

W11-5

SIGN	DIMENSIONS (MM)							
	A	B	C	D	E	F	G	H
MIN.	600	10	15	260	163	225	211	50
STD.	750	13	20	325	202	282	263	50
EXPWY.	900	15	25	389	242	339	316	60
SPECIAL	1200	20	30	510	317	445	413	70

COLORS: SYMBOL & BORDER - BLACK
BACKGROUND - YELLOW (REFLECTIVE)

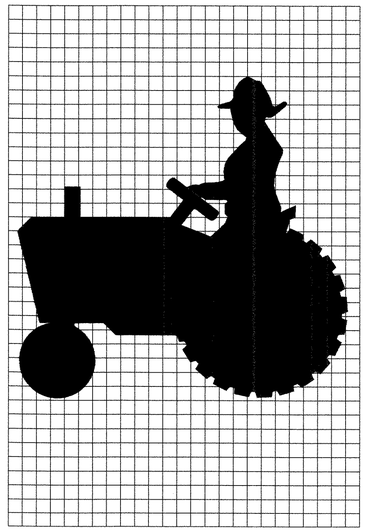

SCALE - 1 SQUARE = 1 UNIT

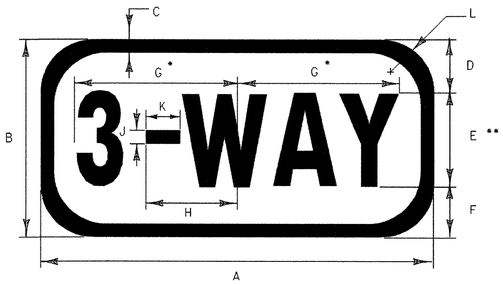

RI-3

* REDUCE SPACING TO FIT
** SERIES 2000 STANDARD ALPHABETS

SIGN	DIMENSIONS (INCHES)										
	A	B	C	D	E	F	G	H	J	K	L
MIN.	300	150	12.5	37.5	75	37.5	122	69	10	27	37.5
STD.	450	225	12.5	50	125	50	200	108	17	44	37.5
EXPWY.	600	300	12.5	75	150	75	240	130	20	53	37.5

COLORS: SYMBOL & BORDER - RED
BACKGROUND - WHITE (REFLECTIVE)

ALL DIMENSIONS IN mm UNLESS OTHERWISE NOTED.

PROJECT NAME: HIGHGATE - FRANKLIN
PROJECT NUMBER: STP RS 0301(1) SA

FILE NAME: ...85c060/design/dc060dtl.dgn
PROJECT LEADER: DELLASANTA
DESIGNED BY: SQUAD B
IPARM FILE NAME: dc060dtl.i

PLOT DATE: 09-MAY-2005
DRAWN BY: SQUAD B
CHECKED BY: SQUAD B
SHEET 224 OF 450

BRIDGE QUANTITY

Metric

DESCRIPTIONS			TOTALS			SUMMARY OF ESTIMATED QUANTITIES																	
ITEM NO.	ITEMS	UNIT	GRAND TOTAL	ROUND	FINAL	STA. 2+217.500			STA. 2+483.000			STA. 3+148.500			STA. 3+627.500			STA. 6+189.250			STA. 8+744.500		
						HDWL 2 (LT)	PIPE	HDWL 1(RT)	HDWL 2 (LT)	BOX	HDWL 1(RT)	HDWL 2 (LT)	PIPE	HDWL 1(RT)	HDWL 2 (LT)	BOX	HDWL 1(RT)	HDWL 2 (LT)	PIPE	HDWL 1(RT)	HDWL 2 (LT)	PIPE	HDWL 1(RT)
203.27	UNCLASSIFIED CHANNEL EXCAVATION	CM	80	4			14.8			8.9			20.5			9.8			10.6			11.4	
204.20	TRENCH EXCAVATION OF EARTH	CM	20	EST.			7.0															13.0	
204.25	STRUCTURE EXCAVATION	CM	1625	25.7		60.8	147.5	68.7	50.6	188.9	60.8	52.2	196.7	66.8	58.5	139.4	60.1	57.7	90.7	77.9	62.8	105.6	53.6
204.30	GRANULAR BACKFILL FOR STRUCTURES	CM	1630	9.1		59.2	164.6	56.9	59.4	206.7	58.5	54.3	167.2	58.6	51.3	189.4	55.6	49.2	138.7	48.5	40.2	119.1	43.7
404.45	TAR EMULSION	L	110	EST.						60						50							
501.34	CONCRETE, HIGH PERFORMANCE CLASS B	CM	210	1.56		17.75		17.75	16.78		16.78	17.29		17.04	16.83		16.78	17.99		17.82	17.89		17.72
507.15	REINFORCING STEEL	KG	15000	42		1230		1230	1300		1300	1186		1186	1264		1264	1236		1236	1263		1263
514.10	WATER REPELLENT (MOD - SILANE)	L	60	EST.		5		5	5		5	5		5	5		5	5		5	5		5
519.20	SHEET MEMBRANE WATERPROOFING	SM	110	0.3						60.5						49.2							
540.10	PRECAST CONCRETE BOX (STA. 2+483.000 - 1850x1850x19900)	LS	1	-						1													
540.10	PRECAST CONCRETE BOX (STA. 3+627.500 - 1850x1850x16800)	LS	1	-												1							
601.0542	1800 mm PCCSP (MOD - 3.51mm (75 mm x 25 mm))	M	68.75	-			18.30						19.70						14.00			16.75	
613.11	STONE FILL, TYPE II	CM	135	1.6			24.0			18.3			17.8			17.9			27.7			27.7	
614.10	TEMPORARY RELOCATION OF STREAM (STA. 2+217.250)	LS	1	-			1																
614.10	TEMPORARY RELOCATION OF STREAM (STA. 2+483.000)	LS	1	-						1													
614.10	TEMPORARY RELOCATION OF STREAM (STA. 3+148.500)	LS	1	-									1										
614.10	TEMPORARY RELOCATION OF STREAM (STA. 3+627.500)	LS	1	-												1							
614.10	TEMPORARY RELOCATION OF STREAM (STA. 6+189.250)	LS	1	-															1				
614.10	TEMPORARY RELOCATION OF STREAM (STA. 8+744.500)	LS	1	-																		1	
649.31	GEOTEXTILE UNDER STONE FILL	SM	310	7			57			42			41			42			70			51	
651.40	GRUBBING MATERIAL	SM	110	5			9			11			16			14			30			25	
654.10	EROSION MATTING (JUTE)	SM	270	2		21		23	21		20	34		31	15		18	18		18	26		23

GENERAL NOTES

1) ALL MATERIALS AND CONSTRUCTION SHALL CONFORM TO AGENCY OF TRANSPORTATION STANDARD SPECIFICATIONS DATED 2001, AND THE LATEST AASHTO STANDARD SPECIFICATIONS FOR HIGHWAY BRIDGES.

2) IT IS THE RESPONSIBILITY OF THE CONTRACTOR TO OBTAIN ALL NECESSARY PERMITS AND CLEARANCES ASSOCIATED WITH THE WORK REQUIRED IN THE TEMPORARY RELOCATION OF THE STREAM

3) IN-STREAM CONSTRUCTION SHALL BE RESTRICTED TO JUNE 1 TO OCTOBER 1, UNLESS THE CONTRACTOR OBTAINS WRITTEN PERMISSION FROM THE AGENCY OF NATURAL RESOURCES TO DO WORK OUTSIDE OF THAT TIME FRAME.

4) THE CONTRACTOR SHALL TAKE ALL PRECAUTIONS NECESSARY TO PREVENT SILTATION OR POLLUTION. ESPECIALLY THE DISCHARGE OF RAW CONCRETE, INTO ANY BROOK, STREAM, OR RIVER.

5) WHEN TRAFFIC OF ANY FORM IS MAINTAINED OVER THE NEW PIPES OR BOXES. THE CONTRACTOR SHALL MAINTAIN A MINIMUM COVER OF 1000 mm OF COMPACTED MATERIAL.

6) THE FOLLOWING TABLE OF ALLOWABLE STRESSES AND WEIGHTS APPLY TO THESE PLANS FOR DESIGN PURPOSES:

CONCRETE, HIGH PERFORMANCE CLASS B: f'c = 25 MPa fc = 10 MPa

ALL CONCRETE MUST BE PRODUCED WITH CEMENTITIOUS MATERIALS EXHIBITING MODERATE SULFATE RESISTANCE

REINFORCING STEEL: Ft = 166 MPa GRADE 420
SOIL UNIT WEIGHT: 2250 kg/m3

DESIGN LOAD FOR SPREAD FOOTINGS ON SOIL: 190 KPa

7) THE KEY IN CONCRETE CONSTRUCTION JOINTS SHALL BE MONOLITHIC AND CONTINUOUS FOR THE FULL LENGTH OF THE JOINT. ANY UPWARD KEY SHALL BE PLACED INTEGRALLY WITH THE CONCRETE BELOW THE JOINT.

8) ALL EXPOSED EDGES OF CONCRETE SHALL BE CHAMFERED 25mm BY 25mm.

9) JOINTS AND SCORE MARKS IN CONCRETE SHALL BE CONSTRUCTED AS INDICATED ON THE PLANS OR AS DIRECTED BY THE ENGINEER.

10) ALL REINFORCING STEEL SHALL BE DETAILED AND FABRICATED USING PROCEDURES AND TOLERANCES IN ACCORDANCE WITH APPLICABLE PUBLICATIONS OF THE CONCRETE REINFORCING STEEL INSTITUTE (CRSI).

REINFORCING PLACEMENT TOLERANCES SHALL BE:
SPACING +/- 25 mm
CLEARANCE +/- 5 mm

11) MINIMUM COVER FOR REINFORCING STEEL SHALL BE FIFTY (50) MILLIMETERS ALONG THE BACK FACES OF WALLS AGAINST EARTH, AND EIGHTY (80) MILLIMETERS ELSEWHERE, UNLESS OTHERWISE NOTED.

12) ALL DIMENSIONS ARE HORIZONTAL OR VERTICAL AND ARE GIVEN AT 20 DEGREES CELSIUS UNLESS OTHERWISE NOTED.

13) ALL EROSION MATTING (JUTE) SHALL BE USED IN AND AROUND THE CHANNEL AT THE STRUCTURE INLETS AND OUTLETS. AT THESE SAME LOCATIONS NO FERTILIZER SHALL BE USED IN CONJUNCTION WITH THE SEEDING OF GRUBBING MATERIAL AND DISTURBED EARTH.

14) NO MATERIAL IS REQUIRED TO BE PLACED IN THE PIPE OR BOX INVERTS. ONCE FLOW IS RETURNED TO THESE STRUCTURES IT IS ANTICIPATED THE DEPOSITION OF NATURAL STREAMBED MATERIAL WILL FILL THE 300mm BURIED INVERTS.

15) ESTIMATED QUANTITIES FOR ITEM 204.20, TRENCH EXCAVATION OF EARTH HAVE BEEN INCLUDED FOR PAYMENT OF THE REMOVAL OF THE EXISTING PIPES WHERE THEY FALL OUTSIDE OF THE LIMITS OF STRUCTURE EXCAVATION FOR THE 1800 mm PCCSP @ STA 2+217.500 AND 8+744.500.

BRIDGE QUANTITY & GENERAL NOTES SHEET

PROJECT NAME: HIGHGATE-FRANKLIN
PROJECT NUMBER: STP RS 0301(I)SA

FILE NAME: /85c060/str/s85c060ww.dgn
PROJECT LEADER: S. FARNSWORTH
DESIGNED BY: M. FOWLER
sc060qty.i

PLOT DATE: 09-MAY-2005
DRAWN BY: R. PELLETT
CHECKED BY: G. SPILAK
SHEET 225 OF 450

MAINLINE STA. 2+217.250
CHANNEL LINE STA. 170+000
ASKEW = 73°-00'-00"

HEADWALL 2

EXISTING 1020 CMP
REMOVE

NEW 1800 X 18300 PCCSP

WW3

WW4

73°

170+000

2+200

2+220

2+240

2+260

WP = CHANNEL LINE STA 169+991.000 =
MAINLINE STA 2+214.636; 8.611m RT

WW1

WW2

HEADWALL 1

TYPE II
STONE FILL
(TYP)

169+980

N

VT STATE PLANE GRID

MDOT Metric

PLAN

F.G. = 79.193

℄

ELEV. = 79.000

-0.056

-0.018

-0.021

-0.059

ELEV. = 79.000

600 STONE FILL*
TYPE II (TYP.)

ELEV. = 77.350

1:-1.6

1:-1.6

ELEV. = 77.500

EXISTING
GROUND

OUTLET INVERT = 74.800

ELEV. = 73.900

PIPE INVERT PLACED
300 BELOW STREAMBED

STREAMBED

INLET INVERT = 75.000

ELEV. = 74.050

9300 (SLOPE LENGTH)

9000 (SLOPE LENGTH)

18300 (SLOPE LENGTH)

80

75

70

*NOTE: SIDE SLOPE TYPE II STONE FILL QUANTITY INCLUDED IN ROADWAY QUANTITIES.

2+217.250
ASKEW 73°-00'-00"
ELEVATION ALONG ℄ PIPE

0 2 4 6 8 10
SCALE IN METERS

HYDRAULIC DATA

DRAINAGE AREA = 90 HA	DESIGN FLOW = Q25 = 1.8 CMS	
DESIGN TAILWATER DEPTH = N/A	ELEVATION = N/A	
ORDINARY HIGH WATER DEPTH = 0.9 M +/-		
Q 2.33 FLOW = 0.6 CM/S	HEADWATER ELEVATION = 0.5M	
Q 10 FLOW = 1.4 CM/S	HEADWATER ELEVATION = 0.9M	
Q 25 FLOW = 1.8 CM/S	HEADWATER ELEVATION = 1.1M	
Q 50 FLOW = 2.2 CM/S	HEADWATER ELEVATION = 1.3M	
Q100 FLOW = 2.6 CM/S	HEADWATER ELEVATION = 1.5M	
COMMENTS: DEPTHS ARE APPROXIMATE BASED ON INLET CONTROL ANALYSIS.		

PLAN & ELEVATION SHEET – STA. 2+217.25

PROJECT NAME: HIGHGATE-FRANKLIN
PROJECT NUMBER: STP RS 0301(I)SA

FILE NAME: /85c060/str/s85c060pe.dgn
PROJECT LEADER: S. FARNSWORTH
DESIGNED BY: M. FOWLER
sc060pe2217.i

PLOT DATE: 09-MAY-2005
DRAWN BY: R. PELLETT
CHECKED BY: G. SPILAK
SHEET 226 OF 450

WADOT Metric

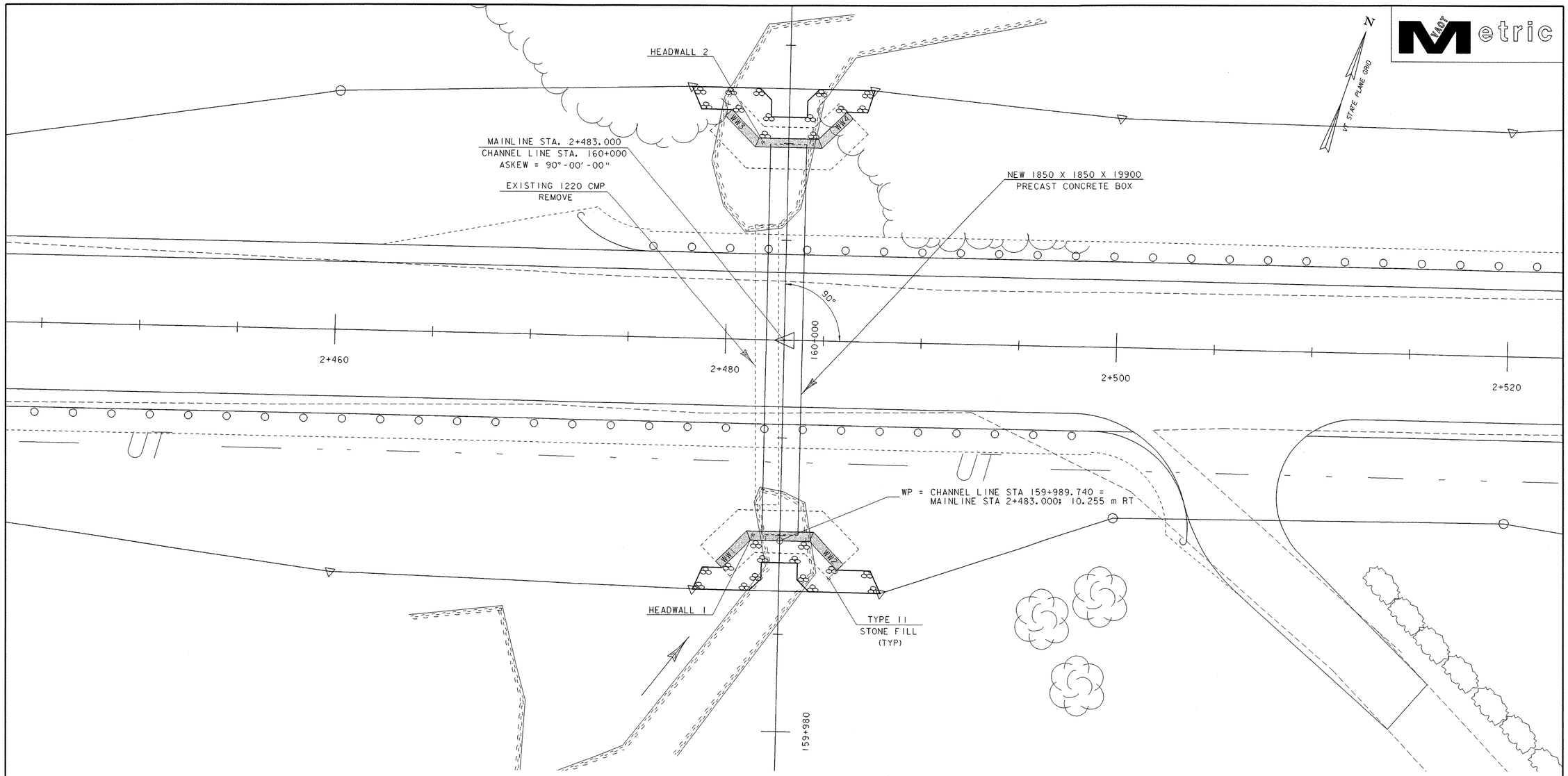

PLAN

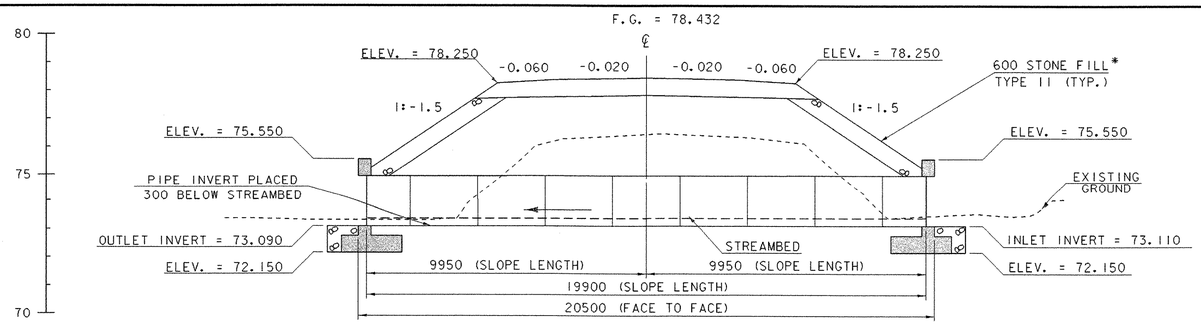

*NOTE: SIDE SLOPE TYPE II STONE FILL QUANTITY INCLUDED IN ROADWAY QUANTITIES.

2+483.000
ASKEW 90°-00'-00''
ELEVATION ALONG ℄ BOX

HYDRAULIC DATA		
DRAINAGE AREA = 313 HA	DESIGN FLOW = Q25 = 4.2 CMS	
DESIGN TAILWATER DEPTH = N/A	ELEVATION = N/A	
ORDINARY HIGH WATER DEPTH = 0.9 M +/-		
Q 2.33 FLOW = 1.6 CM/S		HEADWATER ELEVATION = 0.7M
Q 10 FLOW = 3.4 CM/S		HEADWATER ELEVATION = 1.2M
Q 25 FLOW = 4.2 CM/S		HEADWATER ELEVATION = 1.4M
Q 50 FLOW = 5.1 CM/S		HEADWATER ELEVATION = 1.6M
Q100 FLOW = 6.0 CM/S		HEADWATER ELEVATION = 1.8M
COMMENTS: DEPTHS ARE APPROXIMATE BASED ON INLET CONTROL ANALYSIS.		

0 2 4 6 8 10
SCALE IN METERS

PLAN & ELEVATION SHEET – STA. 2+483.00

PROJECT NAME: HIGHGATE-FRANKLIN
PROJECT NUMBER: STP RS 0301(1)SA

FILE NAME: /85c060/str/s85c060pe.dgn
PROJECT LEADER: S. FARNSWORTH
DESIGNED BY: M. FOWLER
sc060pe2483.i

PLOT DATE: 09-MAY-2005
DRAWN BY: R. PELLETT
CHECKED BY: G. SPILAK
SHEET 227 OF 450

VAOT Metric

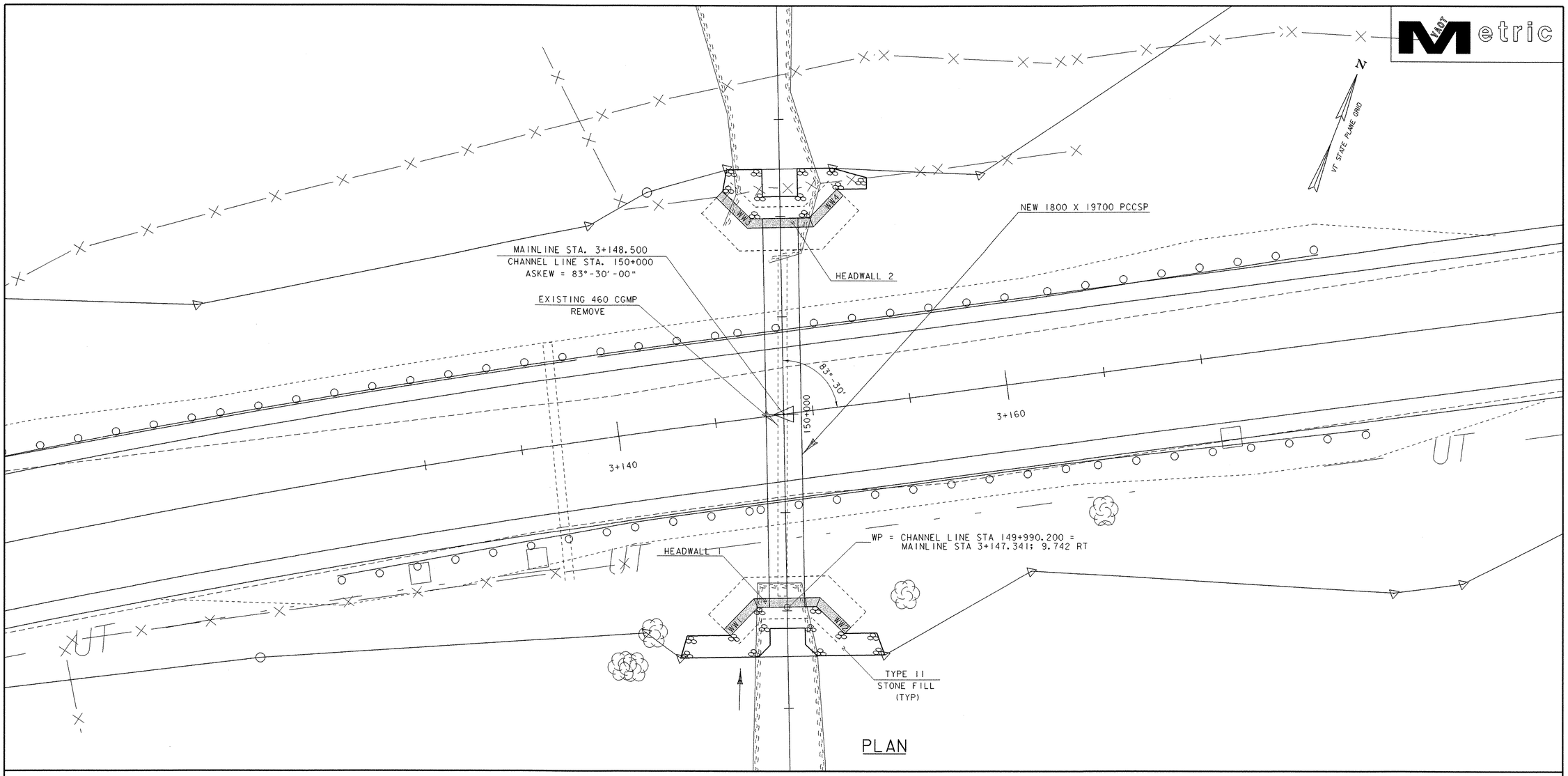

PLAN

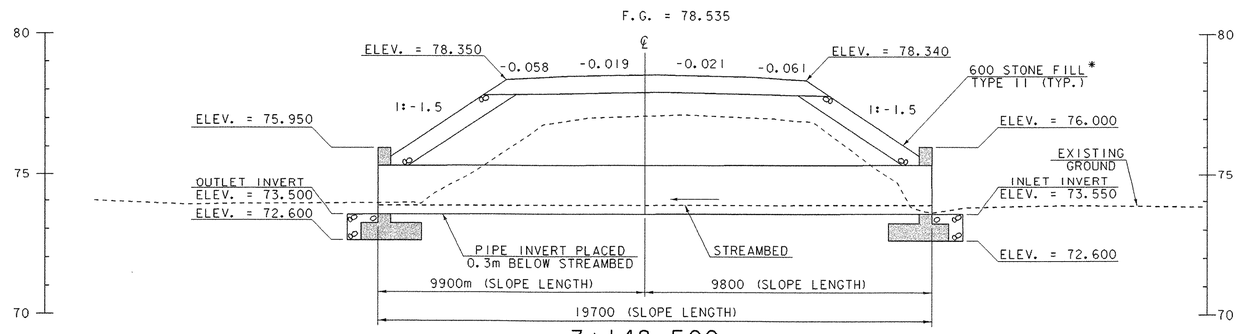

3+148.500
ASKEW 83°-30'-00"
ELEVATION ALONG ℄ PIPE

*NOTE: SIDE SLOPE TYPE II STONE FILL QUANTITY INCLUDED IN ROADWAY QUANTITIES.

0 2 4 6 8 10
SCALE IN METERS

HYDRAULIC DATA

DRAINAGE AREA = 310 HA	DESIGN FLOW = Q25 = 2.0 CMS
DESIGN TAILWATER DEPTH = N/A	ELEVATION = N/A
ORDINARY HIGH WATER DEPTH = 1.8 M +/-	
Q 2.33 FLOW = 0.7 CM/S	HEADWATER ELEVATION = 0.7M
Q 10 FLOW = 1.6 CM/S	HEADWATER ELEVATION = 1.0M
Q 25 FLOW = 2.0 CM/S	HEADWATER ELEVATION = 1.2M
Q 50 FLOW = 2.4 CM/S	HEADWATER ELEVATION = 1.4M
Q100 FLOW = 2.8 CM/S	HEADWATER ELEVATION = 1.6M
COMMENTS: DEPTHS ARE APPROXIMATE BASED ON INLET CONTROL ANALYSIS.	

PLAN & ELEVATION SHEET – STA. 3+148.50

PROJECT NAME: HIGHGATE-FRANKLIN
PROJECT NUMBER: STP RS 0301(I)SA

FILE NAME: /85c060/str/s85c060pe.dgn
PROJECT LEADER: S. FARNSWORTH
DESIGNED BY: M.FOWLER
sc060pe3149.i

PLOT DATE: 09-MAY-2005
DRAWN BY: R. PELLETT
CHECKED BY: G. SPILAK
SHEET 228 OF 450

VAOT Metric

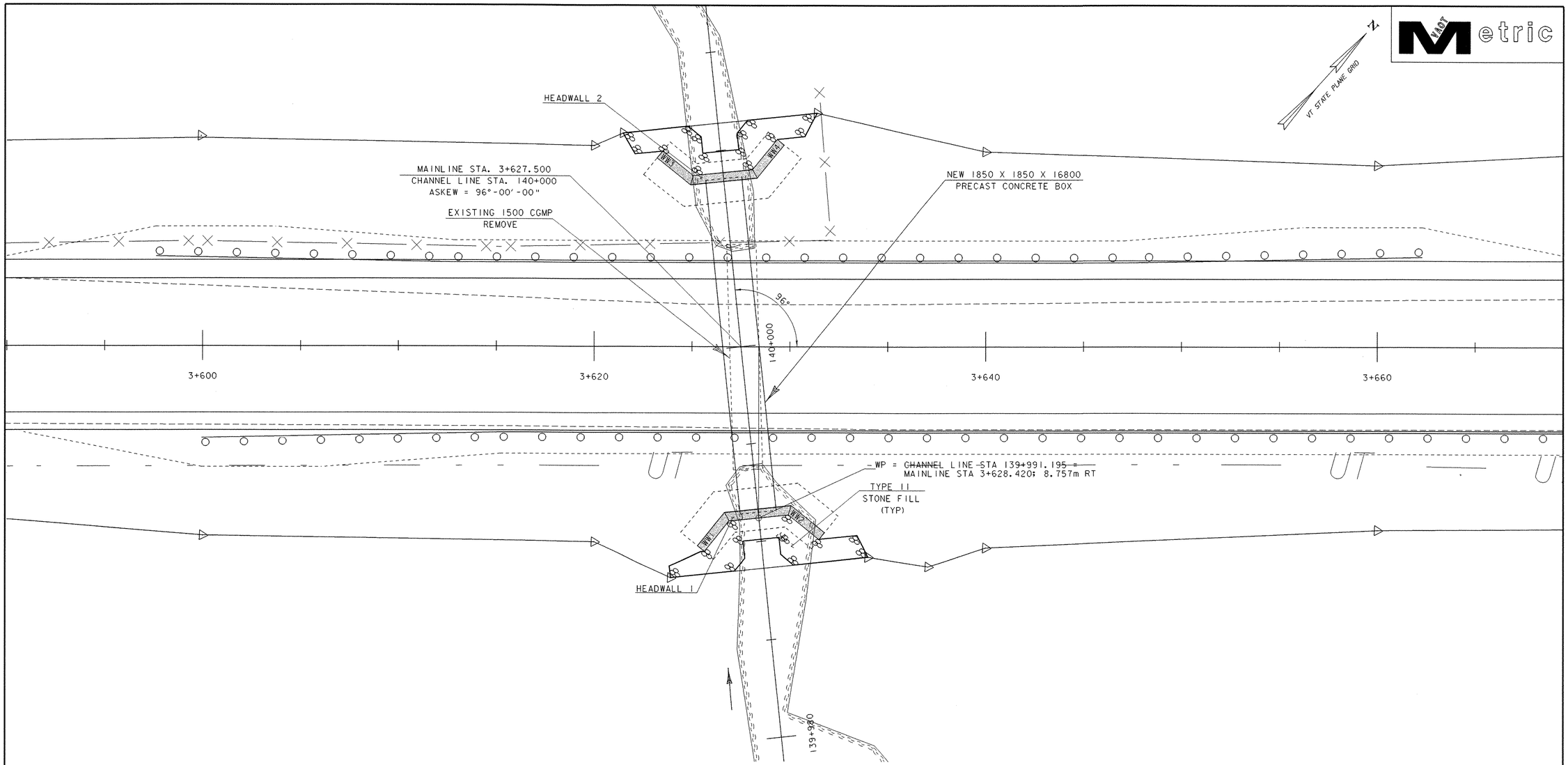

PLAN

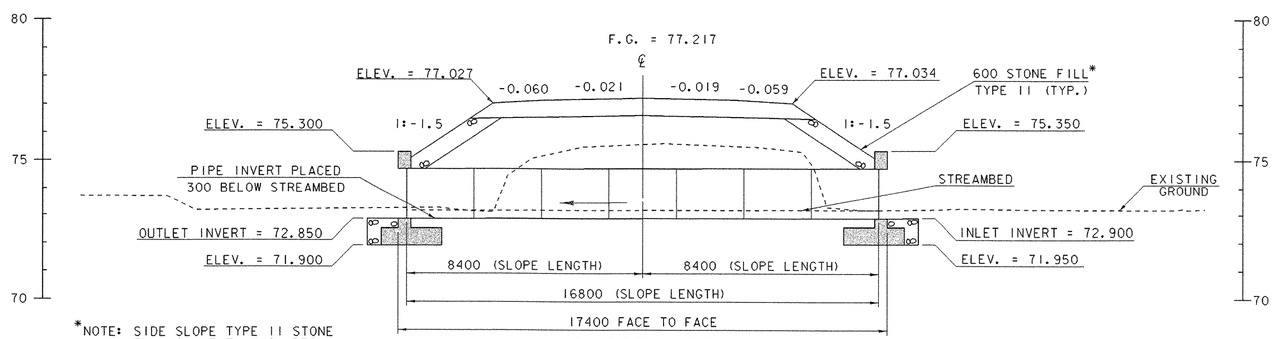

*NOTE: SIDE SLOPE TYPE II STONE FILL QUANTITY INCLUDED IN ROADWAY QUANTITIES.

3+627.500
ASKEW 96°-00'-00''
ELEVATION ALONG ℄ BOX

HYDRAULIC DATA		
DRAINAGE AREA = 270 HA	DESIGN FLOW = Q25 = 4.1 CMS	
DESIGN TAILWATER DEPTH = N/A	ELEVATION = N/A	
ORDINARY HIGH WATER DEPTH = 0.9 M +/-		
Q 2.33 FLOW = 1.4 CM/S	HEADWATER ELEVATION = 0.7M	
Q 10 FLOW = 3.3 CM/S	HEADWATER ELEVATION = 1.2M	
Q 25 FLOW = 4.1 CM/S	HEADWATER ELEVATION = 1.3M	
Q 50 FLOW = 4.8 CM/S	HEADWATER ELEVATION = 1.5M	
Q100 FLOW = 5.8 CM/S	HEADWATER ELEVATION = 1.7M	
COMMENTS: DEPTHS ARE APPROXIMATE BASED ON INLET CONTROL ANALYSIS.		

0 2 4 6 8 10
SCALE IN METERS

PLAN & ELEVATION SHEET – STA. 3+627.50

PROJECT NAME: HIGHGATE-FRANKLIN
PROJECT NUMBER: STP RS 0301(1)SA

FILE NAME: /85c060/str/s86c060pe.dgn
PROJECT LEADER: S. FARNSWORTH
DESIGNED BY: M. FOWLER
sc060pe3627.1

PLOT DATE: 09-MAY-2005
DRAWN BY: R. PELLETT
CHECKED BY: G. SPILAK
SHEET 229 OF 450

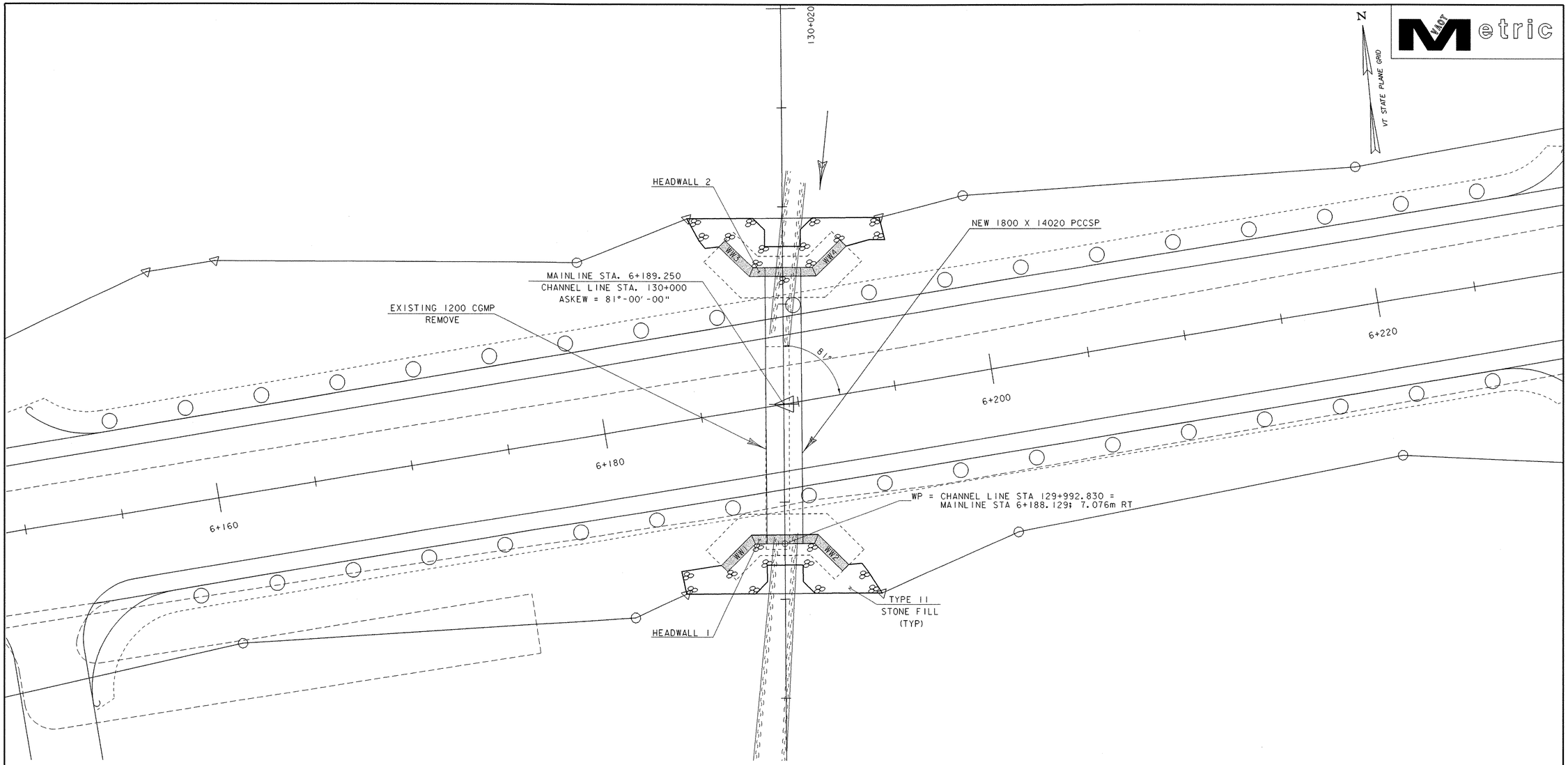

PLAN

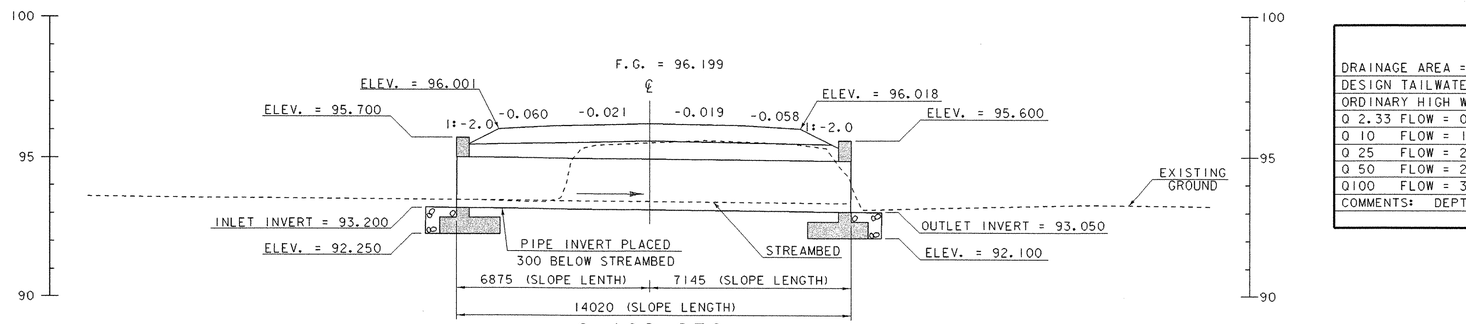

6+189.250
ASKEW 81°-00'-00"
ELEVATION ALONG ℄ PIPE

HYDRAULIC DATA

DRAINAGE AREA = 120 HA	DESIGN FLOW = Q25 = 2.3 CMS	
DESIGN TAILWATER DEPTH = N/A	ELEVATION = N/A	
ORDINARY HIGH WATER DEPTH = 1.5 M +/-		
Q 2.33 FLOW = 0.7 CM/S	HEADWATER ELEVATION = 0.5M	
Q 10 FLOW = 1.7 CM/S	HEADWATER ELEVATION = 0.9M	
Q 25 FLOW = 2.3 CM/S	HEADWATER ELEVATION = 1.0M	
Q 50 FLOW = 2.7 CM/S	HEADWATER ELEVATION = 1.1M	
Q100 FLOW = 3.1 CM/S	HEADWATER ELEVATION = 1.3M	
COMMENTS: DEPTHS ARE APPROXIMATE BASED ON INLET CONTROL ANALYSIS.		

0 2 4 6 8 10
SCALE IN METERS

PLAN & ELEVATION SHEET – STA. 6+189.25

PROJECT NAME: HIGHGATE-FRANKLIN
PROJECT NUMBER: STP RS 0301(I)SA

FILE NAME: /85c060/str/s85c060pe.dgn
PROJECT LEADER: S. FARNSWORTH
DESIGNED BY: M. FOWLER
sc060pe6189.1
PLOT DATE: 09-MAY-2005
DRAWN BY: R. PELLETT
CHECKED BY: G. SPILAK
SHEET 230 OF 450

VAOT Metric

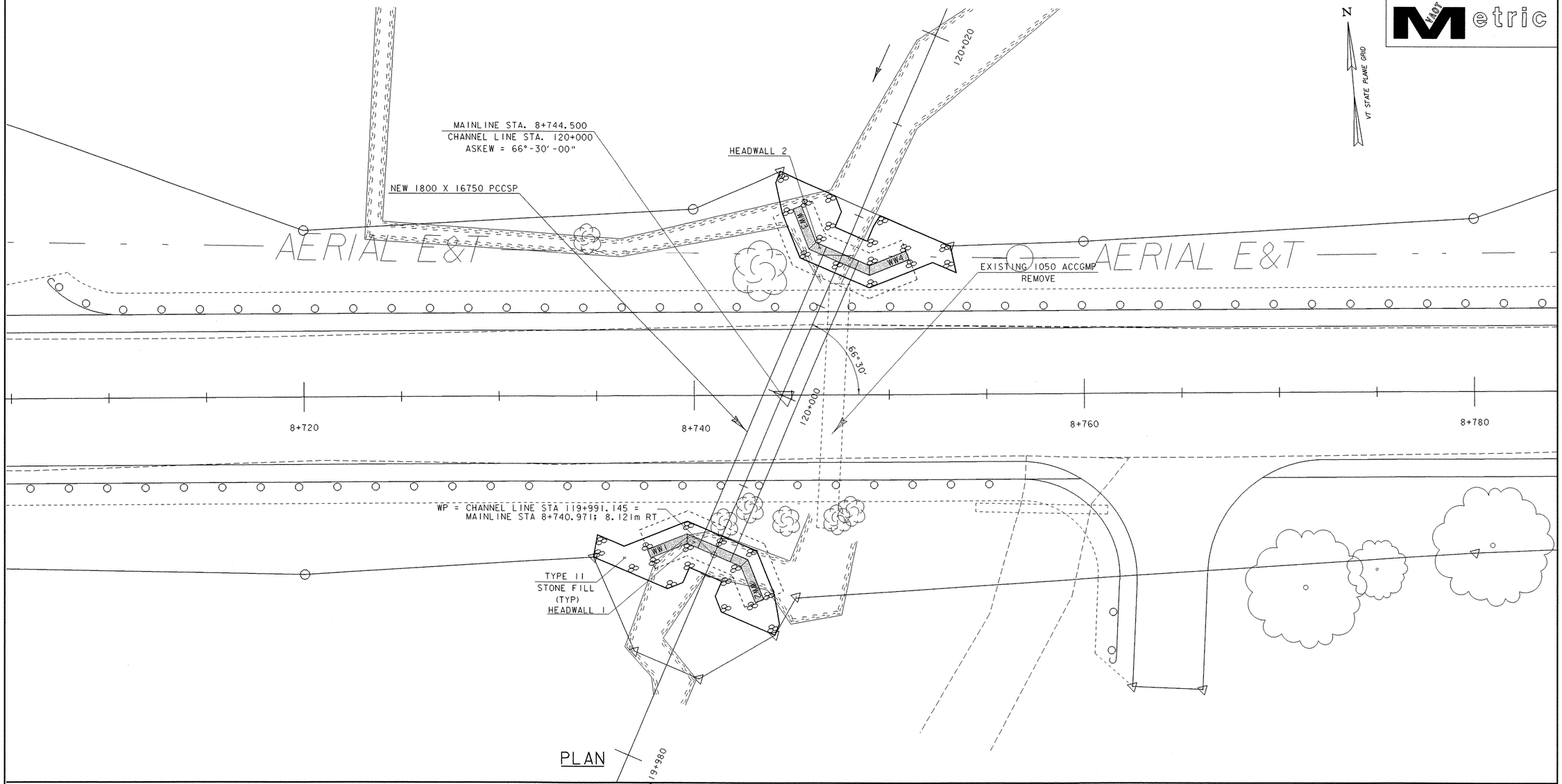

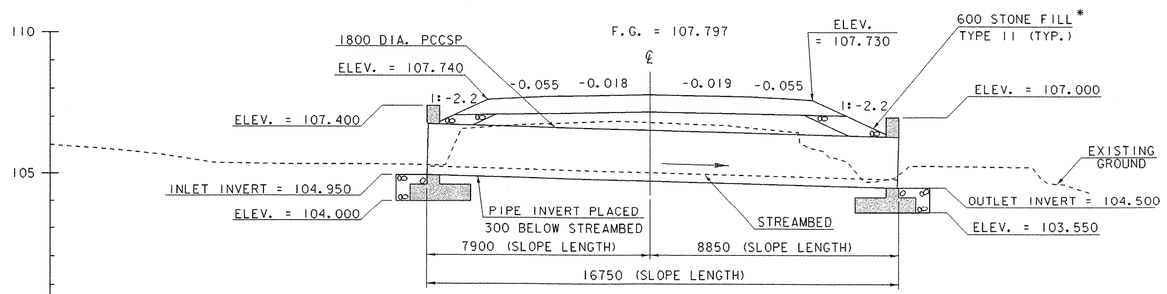

*NOTE: SIDE SLOPE TYPE II STONE FILL QUANTITY INCLUDED IN ROADWAY QUANTITIES.

8+744.500
ASKEW 66°-30'-00''
ELEVATION ALONG ℄ PIPE

HYDRAULIC DATA

DRAINAGE AREA = 120 HA	DESIGN FLOW = Q25 = 1.8 CMS	
DESIGN TAILWATER DEPTH = N/A	ELEVATION = N/A	
ORDINARY HIGH WATER DEPTH = 1.3 M +/-		
Q 2.33 FLOW = 0.9 CM/S	HEADWATER ELEVATION = 0.6M	
Q 10 FLOW = 2.0 CM/S	HEADWATER ELEVATION = 1.0M	
Q 25 FLOW = 2.6 CM/S	HEADWATER ELEVATION = 1.3M	
Q 50 FLOW = 3.0 CM/S	HEADWATER ELEVATION = 1.4M	
Q100 FLOW = 3.4 CM/S	HEADWATER ELEVATION = 1.6M	
COMMENTS: DEPTHS ARE APPROXIMATE BASED ON INLET CONTROL ANALYSIS.		

0 2 4 6 8 10
SCALE IN METERS

PLAN & ELEVATION SHEET – STA. 8+744.50

PROJECT NAME: HIGHGATE-FRANKLIN
PROJECT NUMBER: STP RS 0301(I)SA

FILE NAME: /85c060/str/s85c060pe.dgn
PROJECT LEADER: S. FARNSWORTH
DESIGNED BY: M. FOWLER
sc060pe8744.i

PLOT DATE: 09-MAY-2005
DRAWN BY: R. PELLETT
CHECKED BY: G. SPILAK
SHEET 231 OF 450

1. DESIGN CRITERIA:

   A. SOIL DATA: UNIT WEIGHT = 22 kN/m^3, Ø = 35°

   K_o(AT REST EARTH PRESSURE COEFFICIENT) = 0.43

   B. CONCRETE * f'_c = 30 MPa (PRECAST BOX)

   ALL CONCRETE MUST BE PRODUCED WITH CEMENTITIOUS MATERIALS EXHIBITING MODERATE SULFATE RESISTANCE

   C. DESIGN: SERVICE LOAD OR LOAD FACTOR DESIGN

   LOAD FACTOR: CAPACITY REDUCTION FACTORS
   SHEAR - Φ = 0.85
   BENDING - Φ = 0.90

   γ AND β FACTORS: (GROUP I LOADING)
   DEAD LOAD γ=1.3 β_E= 1.3 VERT. & β= 1.67 LATER.
   LIVE LOAD γ=1.3

   IMPACT - REFER TO AASHTO SECTIONS 3.8 AND 6.4

   SERVICE LOAD AND FACTORS: (GROUP I LOADING)
   DEAD LOAD γ= 1.0 β_E= 1.3 VERT. 1.0 LATER.
   LIVE LOAD γ= 1.0 β= 1.0

2. THE PRECAST SECTION SHOWN IS APPROXIMATE. THE ACTUAL SHAPE WILL BE DEPENDENT UPON THE FABRICATOR. MINOR DIFFERENCES FROM THE SHAPE SHOWN ARE ACCEPTABLE. ALL OF THE UNITS SHALL HAVE THE SAME SHAPE. INDIVIDUAL UNIT LENGTHS DEPICTED ON DRAWINGS ARE 2400mm OR 1550mm. OTHER UNIT LENGTHS MAY BE USED BUT A MIN. LENGTH OF 1200mm MUST BE ADHERED TO.

3. THE HEADWALLS AND WINGWALLS SHALL BE CAST IN PLACE WITH CONCRETE HIGH PERFORMANCE, CLASS B.

4. SEE SPECIAL PROVISIONS FOR ADDITIONAL SPECIFICATIONS ON THE PRECAST UNITS.

5. THE EXTERIOR (TOP & SIDES) AND INTERIOR (SIDES & BOTTOM) OF ALL CONCRETE BOX JOINTS ALONG WITH ALL LIFTING HOLES SHALL BE FILLED WITH MORTAR, TYPE IV, AFTER BEING SET IN THEIR FINAL POSITION. ALL MORTAR SHALL BE WET CURED A MIN. OF 24 HRS. PRIOR TO THE WATERPROOFING DESCRIBED IN NOTE NO. 7.

6. THE SIDES AND TOP OF THE INLET AND OUTLET END SECTIONS SHALL BE PROVIDED WITH INSERTS FOR THE INSTALLATION OF DOWEL BARS. DOWELS OR INSERTS SHALL BE PROVIDED BY THE FABRICATOR OF THE PRECAST UNITS AND COSTS WILL BE INCIDENTAL TO THE CONTRACT ITEM 540.10, PRECAST CONCRETE BOX. SEE DETAILS ON THIS SHEET.

7. A 600mm WIDE STRIP OF SHEET MEMBRANE WATERPROOFING SHALL BE APPLIED AT EACH SIDE JOINT. THE MEMBRANE SHALL BE CENTERED ON THE JOINT AND COVER THE FULL HEIGHT OF SIDE JOINTS. THE ENTIRE TOP SHALL THEN BE COVERED WITH MEMBRANE. THE SHEETS SHALL OVERLAP THE EDGES BY 300mm ON EACH SIDE. AFTER MEMBRANE PLACEMENT THE REMAINDER OF THE EXPOSED SIDES SHALL BE COATED WITH TAR EMULSION APPLIED AS PER SECTION 404.06(a). PAYMENT FOR THE MEMBRANE AND EMULSION WORK SHALL BE BY THEIR RESPECTIVE ITEMS.

8. COSTS FOR ALL MORTAR, TYPE IV USED WILL BE INCIDENTAL TO THE CONTRACT ITEM 540.10, PRECAST CONCRETE BOX.

9. THE GEOTEXTILE FABRIC SHALL BE WRAPPED AROUND THE 300mm UNDERCUT AS SHOWN IN THE TYPICAL BOX SECTION DETAIL ON THIS SHEET.

10. OMIT WEEPHOLES IN ALL PRECAST BOX SECTIONS.

11. 1000mm OF GRANULAR BACKFILL FOR STRUCTURES SHALL BE PROVIDED OVER THE TOP OF THE PRECAST CONCRETE BOXES. IN ACCORDANCE WITH SECTION 601.08 THE PIPES SHALL HAVE A MINIMUM OF 600mm OF GRANULAR BACKFILL FOR STRUCTURES.

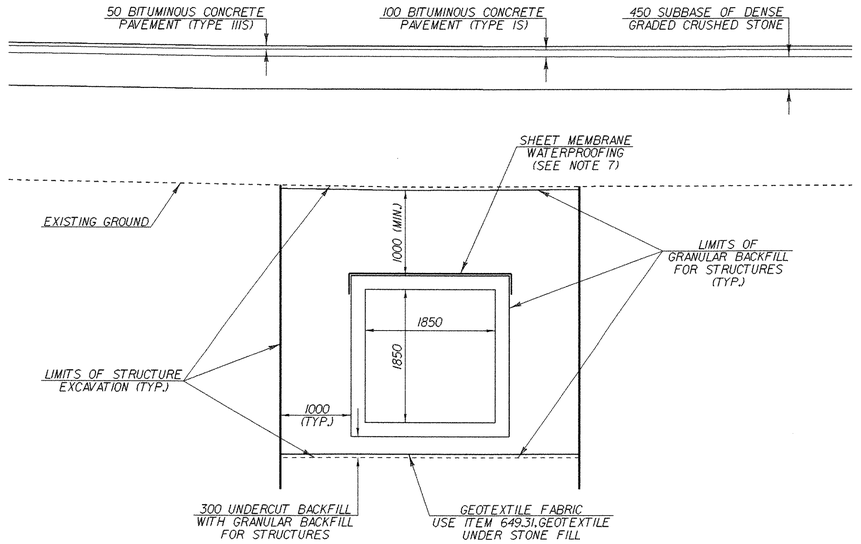

PRECAST BOX SECTION

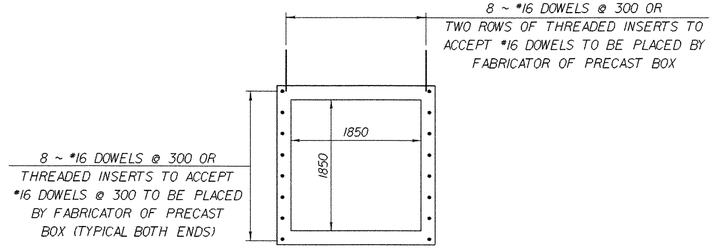

PRECAST BOX DETAIL (END SECTIONS ONLY)

NOTE:
IT IS THE RESPONSIBILITY OF THE CONTRATOR TO OBTAIN ALL NECESSARY PERMITS AND CLEARANCES ASSOCIATED WITH THE WORK REQUIRED IN THE TEMPORARY RELOCATION OF THE STREAM

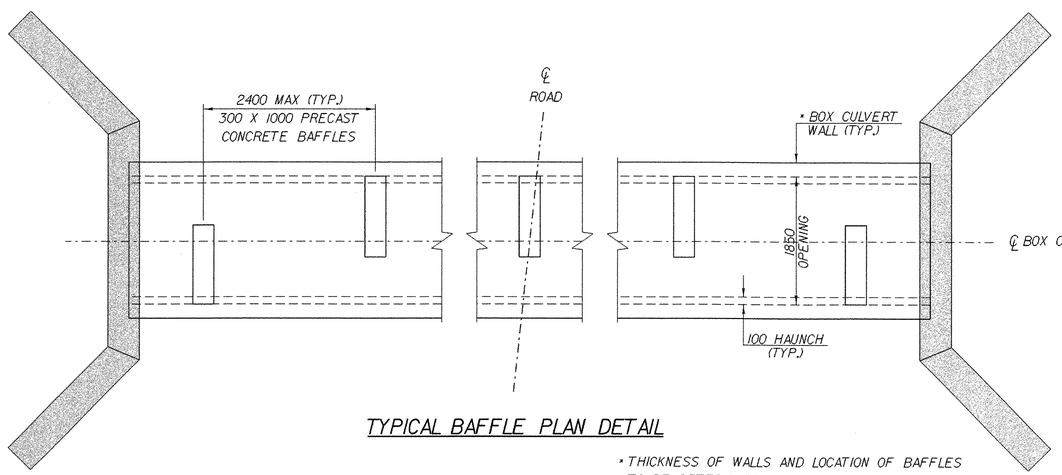

TYPICAL BAFFLE PLAN DETAIL

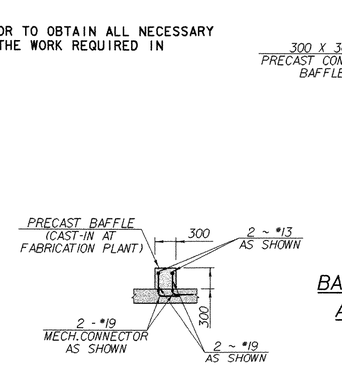

SECTION A-A

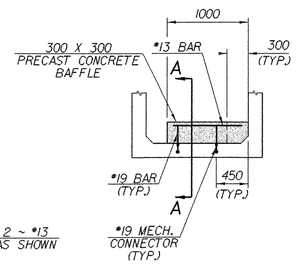

BAFFLE PLACEMENT & ANCHORAGE DETAIL

* THICKNESS OF WALLS AND LOCATION OF BAFFLES TO BE DETERMINED BY THE FABRICATOR.

0 1 2 3 4 5

SCALE = 1:40

Metric

FINAL HYDRAULICS REPORT

BOX CULVERT - STA. 2+483.00

DRAINAGE AREA= 313 HA

02.33=	1.6 cms	HEADWATER ELEVATION=		0.7M
010=	3.4 cms	"	=	1.2M
025=	4.2 cms	"	=	1.4M
050=	5.1 cms	"	=	1.6M
0100=	6.0 cms	"	=	1.8M

TAILWATER ELEVATION @ 050 = N/A
OUTLET VELOCITY @ 025 = 2.8 mps
AT WHAT FREQUENCY IS THE ROADWAY OVERTOPPED? Greater than 0100
DISCHARGE OVER ROAD @ 0100: N/A
REQUIRED CHANNEL PROTECTION: Stone Fill Type II

PERMIT INFORMATION

AVERAGE DAILY FLOW: 0.07 cms
ORDINARY LOW WATER: 0.03 cms DEPTH: 0.1 m
ORDINARY HIGH WATER: 0.7 cms DEPTH: 0.9 m

DESIGN CRITERIA:
1. DESIGN LIVE LOAD AASHTO MS 22.5
2. DESIGN SPAN 1850 X 1850 PRECAST BOX CULVERT
3. ALLOWABLE LOAD FOR SPREAD FOOTINGS ON SOIL 190 kPa ON LEDGE N/A
4. ALLOWABLE LOAD FOR PILING N/A TYPE N/A ESTIMATED LENGTH N/A
5. STRUCTURAL STEEL AASHTO GRADE N/A
6. REINFORCING STEEL GRADE 420
7. CONCRETE HIGH PERFORMANCE, CLASS B f'_c: 25 MPa

TRAFFIC MAINTENANCE:
1. IS TRAFFIC TO BE MAINTAINED? YES

BOX CULVERT - STA. 3+627.50

DRAINAGE AREA= 270 HA

02.33=	1.4 cms	HEADWATER ELEVATION=		0.7M
010=	3.3 cms	"	=	1.2M
025=	4.1 cms	"	=	1.3M
050=	4.8 cms	"	=	1.5M
0100=	5.8 cms	"	=	1.7M

TAILWATER ELEVATION @ 050 = N/A
OUTLET VELOCITY @ 025 = 2.8 mps
AT WHAT FREQUENCY IS THE ROADWAY OVERTOPPED? Greater than 0100
DISCHARGE OVER ROAD @ 0100: N/A
REQUIRED CHANNEL PROTECTION: Stone Fill Type II

PERMIT INFORMATION

AVERAGE DAILY FLOW: 0.06 cms
ORDINARY LOW WATER: 0.03 cms DEPTH: 0.1 m
ORDINARY HIGH WATER: 0.6 cms DEPTH: 0.9 m

DESIGN CRITERIA:
1. DESIGN LIVE LOAD AASHTO MS 22.5
2. DESIGN SPAN 1850 X 1850 PRECAST BOX CULVERT
3. ALLOWABLE LOAD FOR SPREAD FOOTINGS ON SOIL 190 kPa ON LEDGE N/A
4. ALLOWABLE LOAD FOR PILING N/A TYPE N/A ESTIMATED LENGTH N/A
5. STRUCTURAL STEEL AASHTO GRADE N/A
6. REINFORCING STEEL GRADE 420
7. CONCRETE HIGH PERFORMANCE, CLASS B f'_c: 25 MPa

TRAFFIC MAINTENANCE:
1. IS TRAFFIC TO BE MAINTAINED? YES

BOX CULVERT DETAIL SHEET

PROJECT NAME: HIGHGATE-FRANKLIN
PROJECT NUMBER: STP RS 0301(I)SA

FILE NAME: /85c060/str/s85c060ww.dgn
PROJECT LEADER: S. FARNSWORTH
DESIGNED BY: M. FOWLER
sc060box.i

PLOT DATE: 09-MAY-2005
DRAWN BY: R. PELLETT
CHECKED BY: G. SPILAK
SHEET 232 OF 450

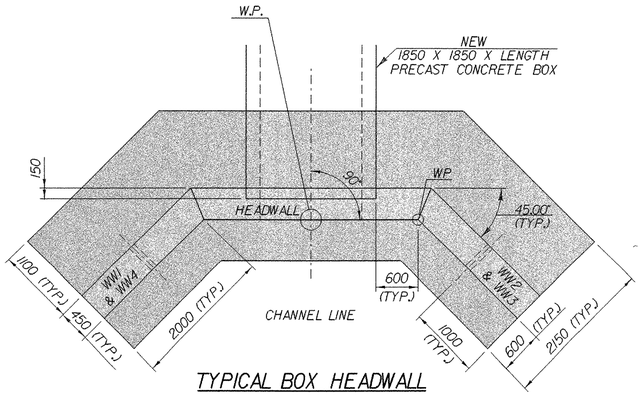

TYPICAL BOX HEADWALL
PLAN

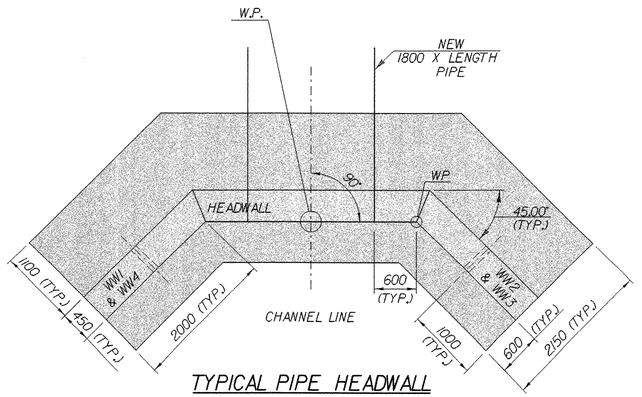

TYPICAL PIPE HEADWALL
PLAN

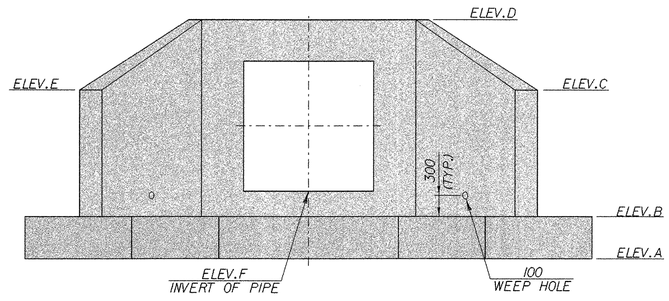

TYPICAL BOX HEADWALL
ELEVATION

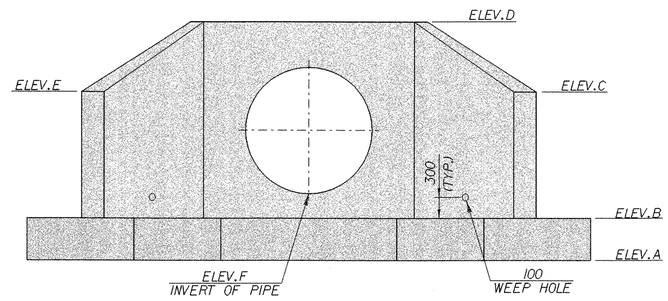

TYPICAL PIPE HEADWALL
ELEVATION

ELEVATIONS FOR HEADWALLS

STA.	ELEV. A	ELEV. B	ELEV. C	ELEV. D	ELEV. E	ELEV. F
2+217.25	ASKEW 73°-00'-00"		1800 X 18.300 m PIPE			
HEADWALL 1						
	74.050	74.650	76.500	77.500	76.900	75.000
HEADWALL 2						
	73.900	74.500	76.350	77.350	76.750	74.800
2+483.00	ASKEW 90°-00'-00"		1850 X 1850 X 19.900 m PRECAST CONCRETE BOX			
HEADWALL 1						
	72.150	72.750	74.550	75.550	74.550	73.110
HEADWALL 2						
	72.150	72.750	74.550	75.550	74.550	73.090
3+148.50	ASKEW 83°-30'-00"		1800 X 19.700 m PIPE			
HEADWALL 1						
	72.600	73.200	75.000	76.000	75.000	73.550
HEADWALL 2						
	72.600	73.200	74.950	75.950	75.100	73.500
3+627.50	ASKEW 96°-00'-00"		1850 X 1850 X 16.800 m PRECAST CONCRETE BOX			
HEADWALL 1						
	71.950	72.550	74.400	75.350	74.400	72.900
HEADWALL 2						
	71.900	72.500	74.300	75.300	74.300	72.850
6+189.25	ASKEW 81°-00'-00"		1800 X 14.000 m PIPE			
HEADWALL 1						
	92.100	92.700	94.600	95.600	95.000	93.050
HEADWALL 2						
	92.250	92.850	94.700	95.700	95.100	93.200
8+744.50	ASKEW 66°-30'-00"		1800 X 16.750 m PIPE			
HEADWALL 1						
	103.550	104.150	106.000	107.000	106.700	104.500
HEADWALL 2						
	104.000	104.600	106.400	107.400	107.100	104.950

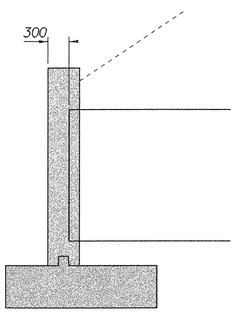

SECTION @ ℄ BOX
AND MIDPOINT OF HEADWALL

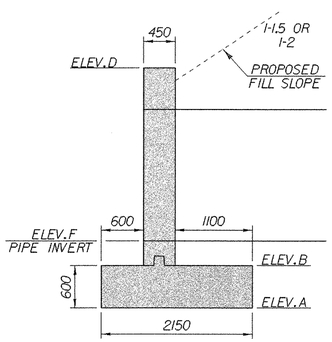

SECTION @ ℄ PIPE
AND MIDPOINT OF HEADWALL

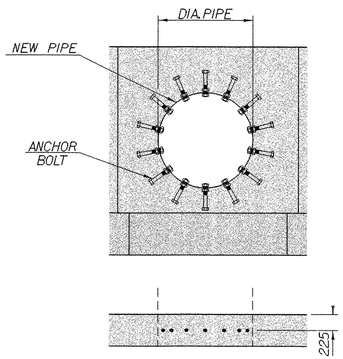

HEADWALL DETAIL
FOR PIPES

1 - ROW GALVANIZED ANCHOR BOLTS SPACED IN ALTERNATE CIRCUMFERENTIAL SEAM HOLES IF AVAILABLE. OTHERWISE USE 13 BOLTS SPACED AT 435 LOCATED AS SHOWN IN PLAN.

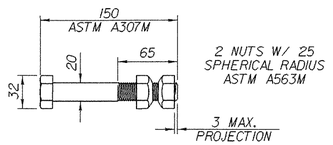

ANCHOR BOLT DETAIL
(NOT TO SCALE)

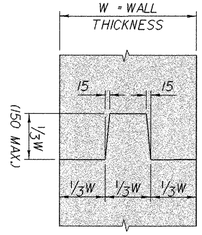

TYPICAL CONCRETE
CONSTRUCTION JOINT
NOT TO SCALE

0 1 2 3 4 5
SCALE = 1:40

HEADWALL PLAN SHEET

PROJECT NAME: HIGHGATE-FRANKLIN
PROJECT NUMBER: STP RS 0301(1)SA

FILE NAME: /85c060/str/s85c060ww.dgn
PROJECT LEADER: S. FARNSWORTH
DESIGNED BY: M. FOWLER
sc060ww.i
PLOT DATE: 09-MAY-2005
DRAWN BY: R. PELLETT
CHECKED BY: G. SPILAK
SHEET 233 OF 450

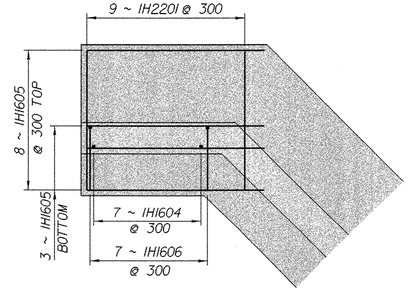

TYPICAL WINGWALL
REINFORCING PLAN

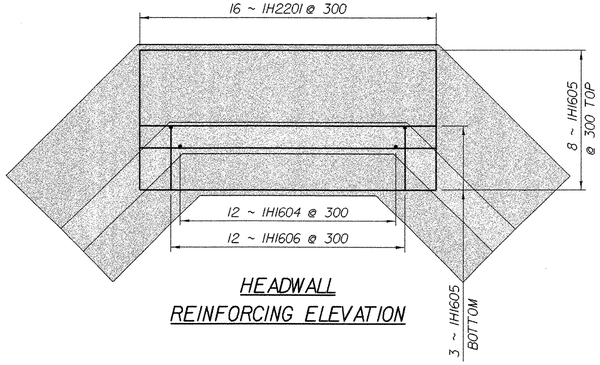

HEADWALL
REINFORCING ELEVATION

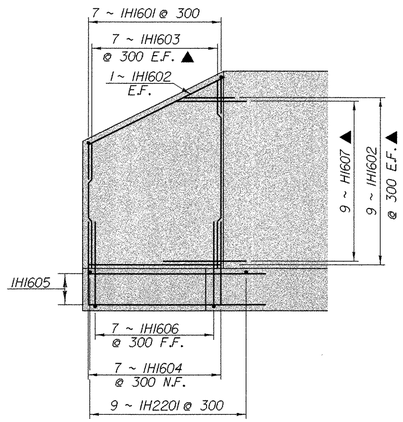

TYPICAL WINGWALL
REINFORCING ELEVATION

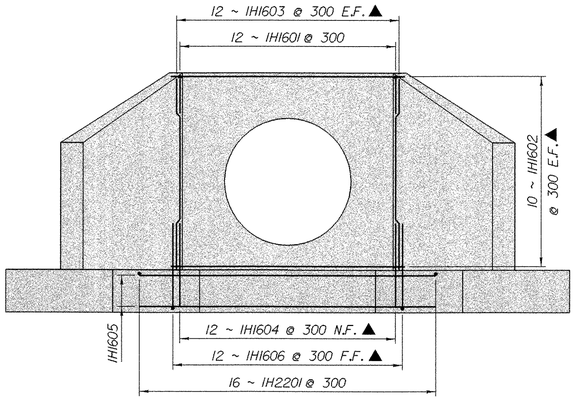

HEADWALL PIPE
REINFORCING ELEVATION

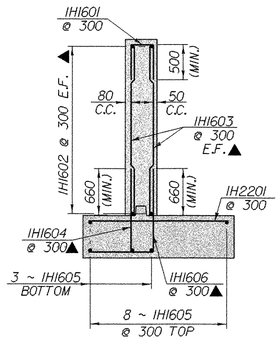

TYPICAL SECTION
REINFORCING

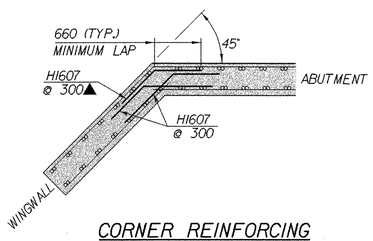

CORNER REINFORCING
DETAIL PIPE

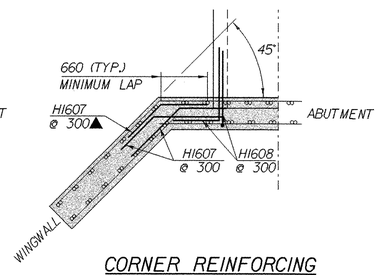

CORNER REINFORCING
DETAIL BOX

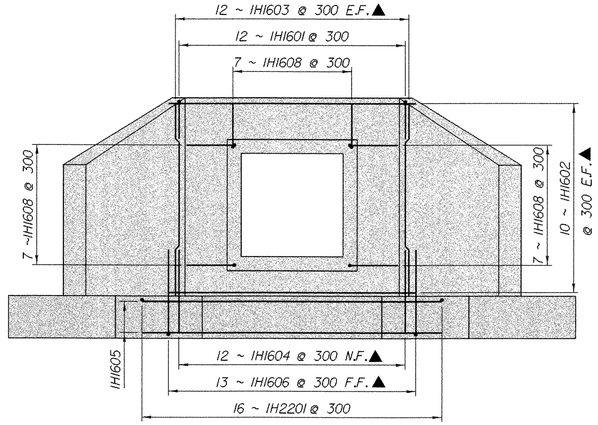

HEADWALL BOX
REINFORCING ELEVATION

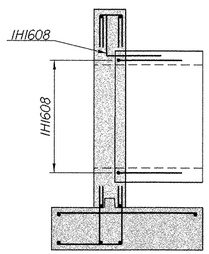

TYPICAL SECTION @ BOX
REINFORCING

0 1 2 3 4 5

SCALE = 1:40

HEADWALL REINFORCING DETAIL SHEET

PROJECT NAME: HIGHGATE-FRANKLIN
PROJECT NUMBER: STP RS 0301(1)SA

FILE NAME: /85c060/str/s85c060ww.dgn
PROJECT LEADER: S. FARNSWORTH
DESIGNED BY: M. FOWLER
sc060wr.i

PLOT DATE: 09-MAY-2005
DRAWN BY: R. PELLETT
CHECKED BY: G. SPILAK
SHEET 234 OF 450

REINFORCING FOR 2 HEADWALLS - 2+217.25

REINFORCING STEEL SCHEDULE

NO. PIECES	SIZE	LENGTH	MARK	TYPE	A	B	C	D	H	J	K	R
108	16	3.33 ▲	H1602	STR	3.33							
96	16	2.77 ▲	H1603	STR	2.77							
52	16	1.18 ▲	H1604	STR	1.18							
66	16	4.22 ▲	H1605	STR	4.22							
68	22	1.99	H2201	STR	1.99							
52	16	2.10 ▲	H1606	17		0.92	1.18	---				
108	16	1.64 ▲	H1607	22		0.66	0.98	---	0.47	---	0.47	---
52	16	1.32	H1601	S10		0.50	0.32	0.50				

REINFORCING FOR 2 HEADWALLS - 2+483.00

REINFORCING STEEL SCHEDULE

NO. PIECES	SIZE	LENGTH	MARK	TYPE	A	B	C	D	H	J	K	R
108	16	3.52 ▲	H1602	STR	3.52							
96	16	2.72 ▲	H1603	STR	2.72							
52	16	1.18 ▲	H1604	STR	1.18							
66	16	4.27 ▲	H1605	STR	4.27							
68	22	1.99	H2201	STR	1.99							
52	16	2.10 ▲	H1606	17		0.92	1.18	---				
42	16	1.69	H1608	17		0.66	1.03	---				
108	16	1.64 ▲	H1607	22		0.66	0.98	---	0.47	---	0.47	---
52	16	1.32	H1601	S10		0.50	0.32	0.50				

REINFORCING FOR 2 HEADWALLS - 3+148.50

REINFORCING STEEL SCHEDULE

NO. PIECES	SIZE	LENGTH	MARK	TYPE	A	B	C	D	H	J	K	R
108	16	3.33 ▲	H1602	STR	3.33							
92	16	2.72 ▲	H1603	STR	2.72							
52	16	1.18 ▲	H1604	STR	1.18							
66	16	4.22 ▲	H1605	STR	4.22							
68	25	1.99	H2201	STR	1.99							
52	16	2.10 ▲	H1606	17		0.92	1.18	---				
108	16	1.64 ▲	H1607	22		0.66	0.98	---	0.47	---	0.47	---
52	16	1.32	H1601	S10		0.50	0.32	0.50				

REINFORCING FOR 2 HEADWALLS - 3+627.50

REINFORCING STEEL SCHEDULE

NO. PIECES	SIZE	LENGTH	MARK	TYPE	A	B	C	D	H	J	K	R
104	16	3.52 ▲	H1602	STR	3.52							
84	16	2.72 ▲	H1603	STR	2.72							
52	16	1.18 ▲	H1604	STR	1.18							
66	16	4.27 ▲	H1605	STR	4.27							
68	22	1.99	H2201	STR	1.99							
52	16	2.10 ▲	H1606	17		0.92	1.18	---				
42	16	1.69	H1608	17		0.66	1.03	---				
108	16	1.64 ▲	H1607	22		0.66	0.98	---	0.47	---	0.47	---
52	16	1.32	H1601	S10		0.50	0.32	0.50				

REINFORCING FOR 2 HEADWALLS - 6+189.25

REINFORCING STEEL SCHEDULE

NO. PIECES	SIZE	LENGTH	MARK	TYPE	A	B	C	D	H	J	K	R
112	16	3.33 ▲	H1602	STR	3.33							
92	16	2.82 ▲	H1603	STR	2.82							
52	16	1.18 ▲	H1604	STR	1.18							
66	16	4.22 ▲	H1605	STR	4.22							
68	22	1.99	H2201	STR	1.99							
52	16	2.10 ▲	H1606	17		0.92	1.18	---				
108	16	1.64 ▲	H1607	22		0.66	0.98	---	0.47	---	0.47	---
52	16	1.32	H1601	S10		0.50	0.32	0.50				

REINFORCING FOR 2 HEADWALLS - 8+744.00

REINFORCING STEEL SCHEDULE

NO. PIECES	SIZE	LENGTH	MARK	TYPE	A	B	C	D	H	J	K	R
124	16	3.33 ▲	H1602	STR	3.33							
92	16	2.77 ▲	H1603	STR	2.77							
52	16	1.18 ▲	H1604	STR	1.18							
66	16	4.22 ▲	H1605	STR	4.22							
68	22	1.99	H2201	STR	1.99							
52	16	2.10 ▲	H1606	17		0.92	1.18	---				
108	16	1.64 ▲	H1607	22		0.66	0.98	---	0.47	---	0.47	---
52	16	1.32	H1601	S10		0.50	0.32	0.50				

NOTE:

NF = NEAR FACE
FF = FAR FACE
EF = EACH FACE
▲ = CUT TO FIT IN FIELD
80 CLR. UNLESS OTHERWISE SPECIFIED ON THE PLANS.

* REINFORCING STEEL LENGTHS IN METERS

* CUT BAR LENGTHS REUSED IN APPROPRIATE PLACES

REINFORCING STEEL NOTES

1. UNLESS OTHERWISE DESIGNATED, ALL BAR REINFORCEMENT FOR CONCRETE IN SIZES UP TO AND INCLUDING 55M SHALL CONFROM TO THE REQUIREMENT OF THE "SPECIFICATIONS FOR DEFORMED BILLET-STEEL BARS FOR CONCRETE REINFORCEMENT", AASHTO M 31M (ASTM A 615M-SI). ALL BARS SHALL BE GRADE 420. UNLESS OTHERWISE DESIGNATED.
2. FOR TYPICAL BENDING DETAILS, RECOMMENDED PIN DIAMETER "D" OF BENDS AND HOOKS, AND OTHER STANDARD PRACTICE. SEE CURRENT CONCRETE REINFORCING STEEL INSTITUTE "MANUAL OF STANDARD PRACTICE".
3. "J" DIMENSION ON 180 DEGREE HOOKS ARE TO BE SHOWN ONLY WHEN NECESSARY TO RESTRICT HOOK SIZE. OTHERWISE, STANDARD HOOKS ARE TO BE USED.
4. "H" DIMENSION ON STIRRUPS ARE TO BE SHOWN ONLY WHEN NECCESSARY TO MAINTAIN CLEARANCES.
5. WHERE SLOPE DIFFERS FROM 45 DEGREES, DIMENSIONS "H" AND "K" MUST BE SHOWN.
6. ▲ DENOTES BARS TO BE CUT IN FIELD.

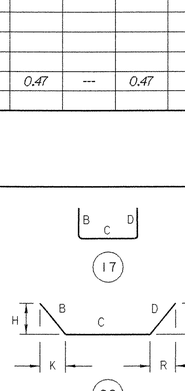

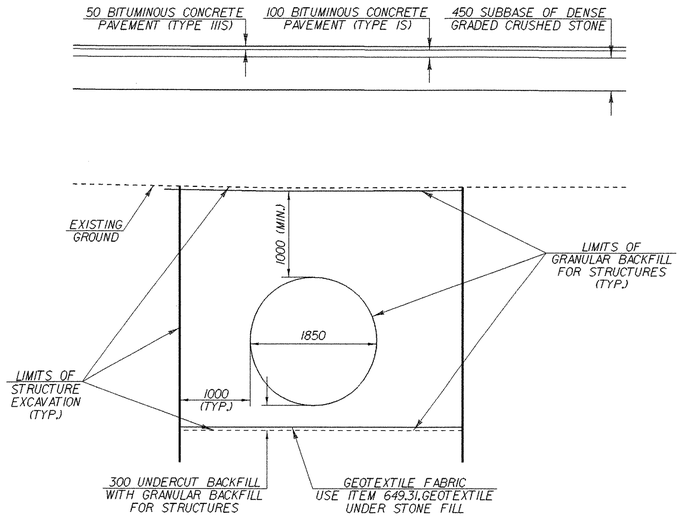

PIPE SECTION

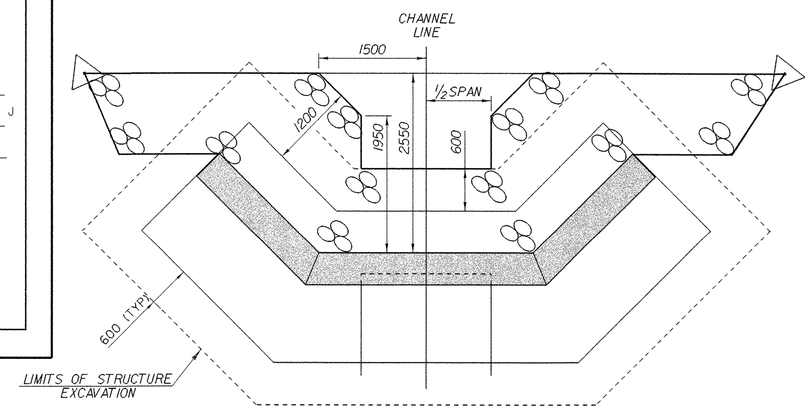

TYPICAL TYPE II STONE FILL PLAN AT INLET & OUTLET

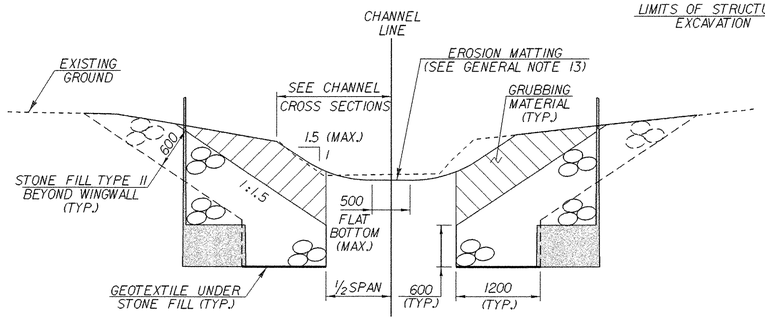

NOTE: ALL EXCAVATION REQUIRED TO CONSTRUCT THE CHANNEL WHICH IS OUTSIDE OF THE LIMITS OF STRUCTURE EXCAVATION SHALL BE PAID AS ITEM 203.27. UNCLASSIFIED CHANNEL EXCAVATION.

RADIUS VARIES BETWEEN CHANNEL BOTTOM AND SIDES AND IS NOT DIMENSIONED. AS DRAWN IT IS ONLY MEANT TO APPROXIMATE FINAL CONDITIONS FOR THE PURPOSE OF ESTIMATING QUANTITES.

TYPICAL CHANNEL SECTION

REINFORCING SCHEDULE SHEET

PROJECT NAME: HIGHGATE-FRANKLIN
PROJECT NUMBER: STP RS 0301(I)SA

FILE NAME: /85c060/str/s85c060ww.dgn
PROJECT LEADER: S. FARNSWORTH
DESIGNED BY: M. FOWLER
sc060rein.i
PLOT DATE: 09-MAY-2005
DRAWN BY: R. PELLETT
CHECKED BY: G. SPILAK
SHEET 235 OF 450

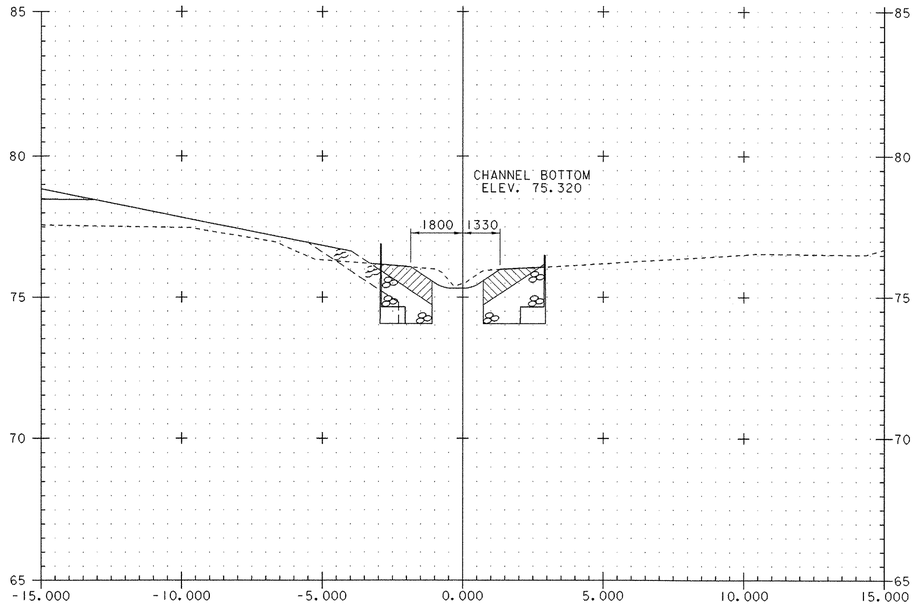

169+989.600

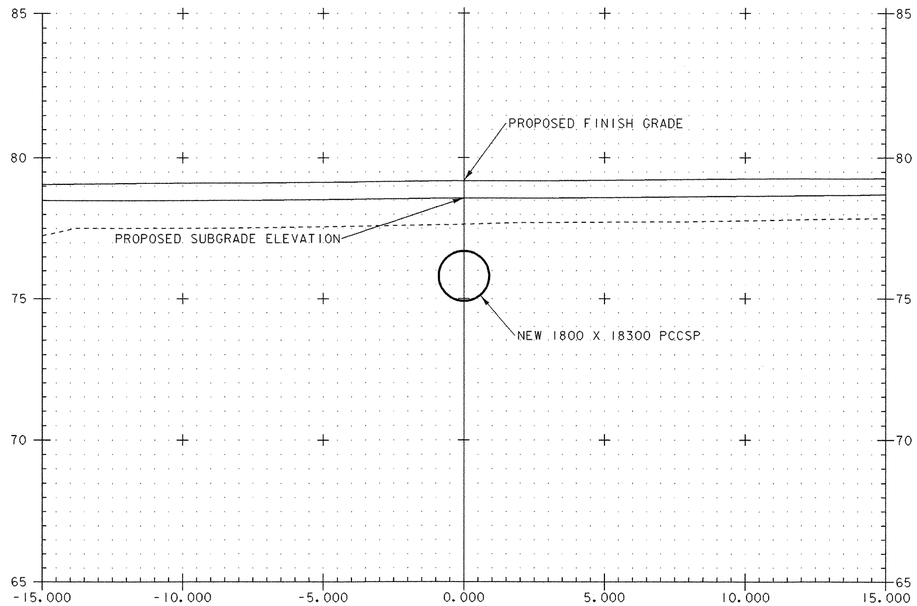

170+000.000

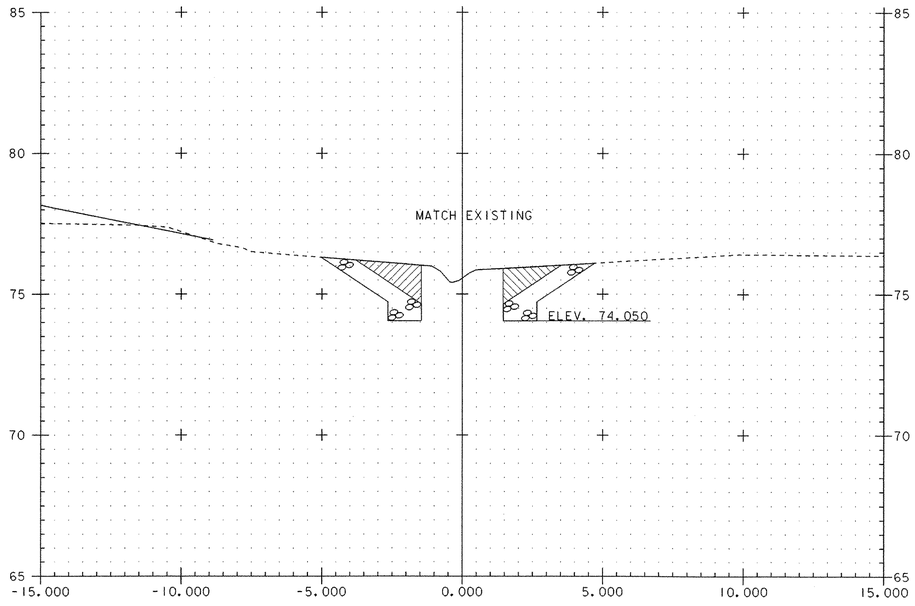

169+988.500

BEGIN TYPE II STONE FILL W/ GEOTEXTILE UNDER STONE FILL, GRUBBING MATERIAL, AND EROSION MATTING

NOTE: ALL CROSS-HATCHED AREAS REPRESENT GRUBBING MATERIAL

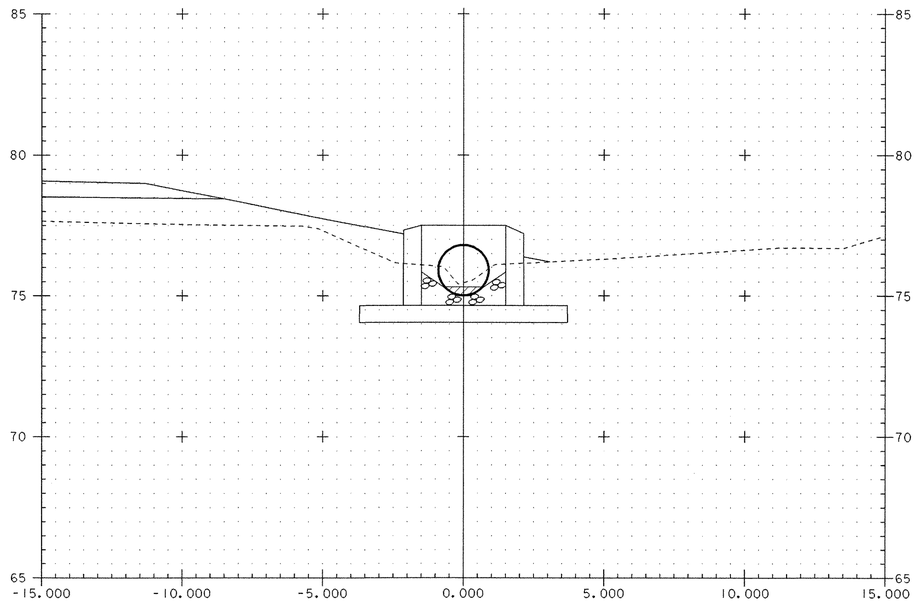

169+991.000

END TYPE II STONE FILL, GRUBBING MATERIAL, AND EROSION MATTING
STA. 169+990.400 END GEOTEXTILE UNDER STONE FILL

0 2 4 6 8 10
SCALE 1:100

PIPE STA. 2+217.25 – CHANNEL SECTIONS

PROJECT NAME: HIGHGATE - FRANKLIN
PROJECT NUMBER: STP RS 0301(1) SA

FILE NAME: /85c060/str/s85c060xs.dgn
PROJECT LEADER: S. FARNSWORTH
DESIGNED BY: M. FOWLER
sc060xs2217a.i

PLOT DATE: 09-MAY-2005
DRAWN BY: R. PELLETT
CHECKED BY: G. SPILAK
SHEET 236 OF 450

Metric

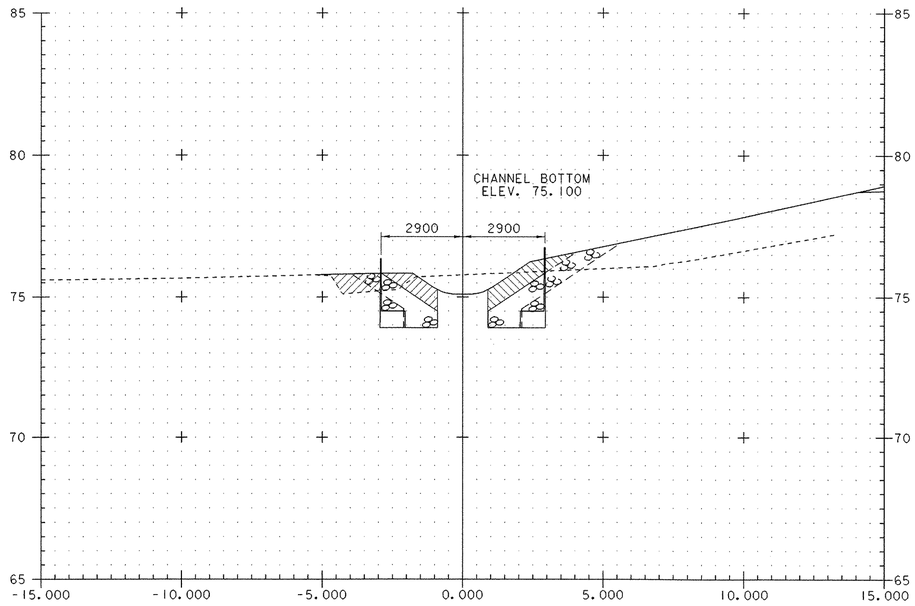

170+010.700

END GRUBBING MATERIAL

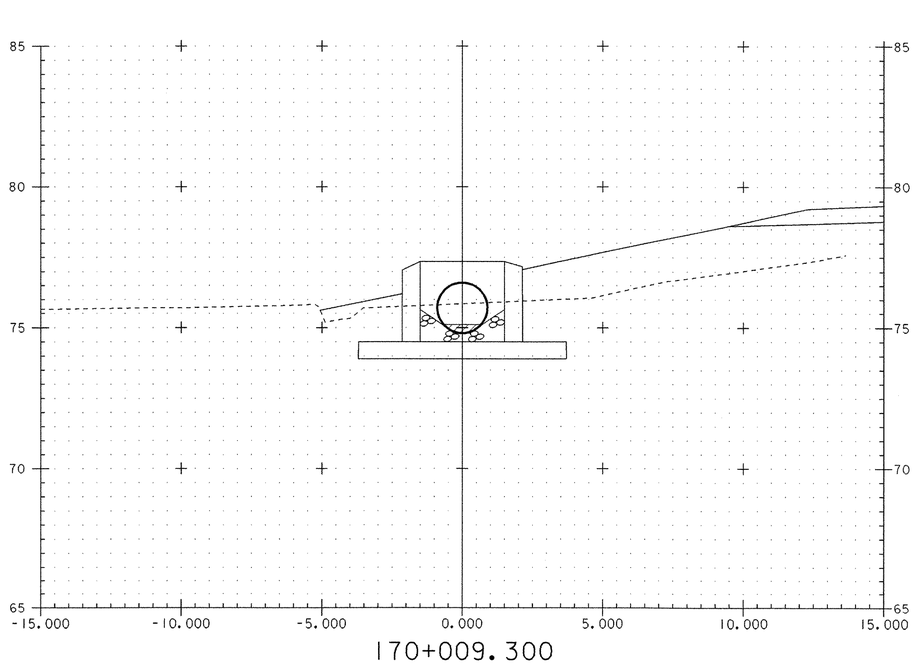

170+009.300

BEGIN TYPE II STONE FILL AND GRUBBING MATERIAL
STA. 170+009.900 GEOTEXTILE UNDER STONE FILL

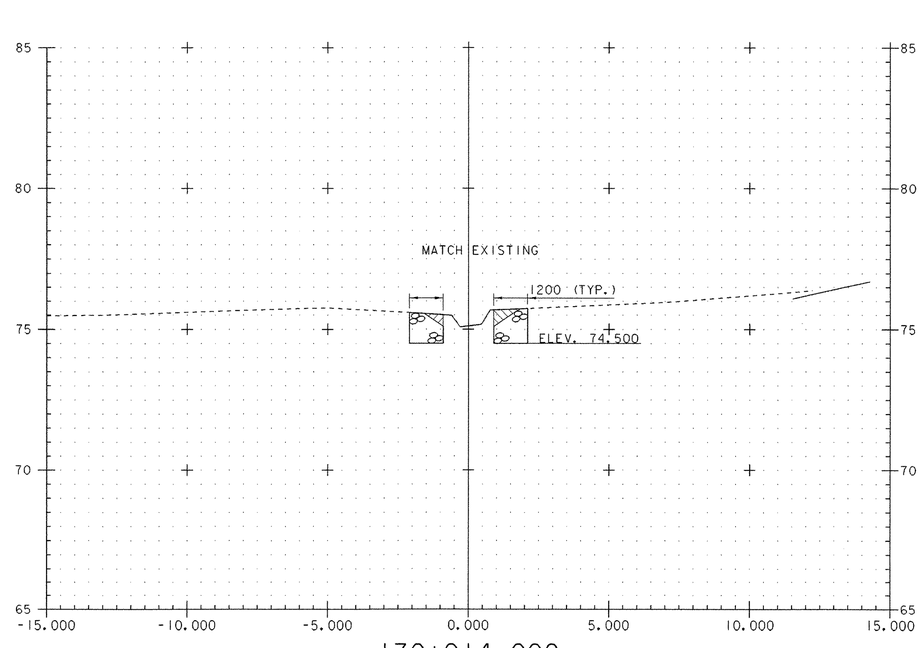

170+014.000

END TYPE II STONE FILL, GEOTEXTILE UNDER STONE FILL,
AND GRUBBING MATERIAL

0 2 4 6 8 10
SCALE 1:100

PIPE STA. 2+217.25 – CHANNEL SECTIONS

PROJECT NAME: HIGHGATE - FRANKLIN
PROJECT NUMBER: STP RS 0301(1) SA

FILE NAME: /85c060/str/s85c060xs.dgn
PROJECT LEADER: S. FARNSWORTH
DESIGNED BY: M. FOWLER
sc060xs2217b.i

PLOT DATE: 09-MAY-2005
DRAWN BY: R. PELLETT
CHECKED BY: G. SPILAK
SHEET 237 OF 450

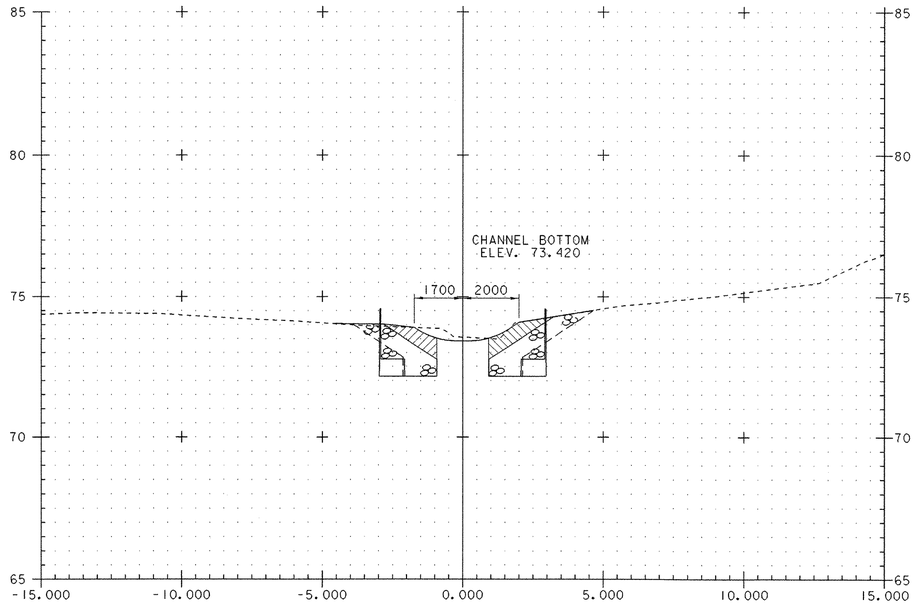

159+988.350

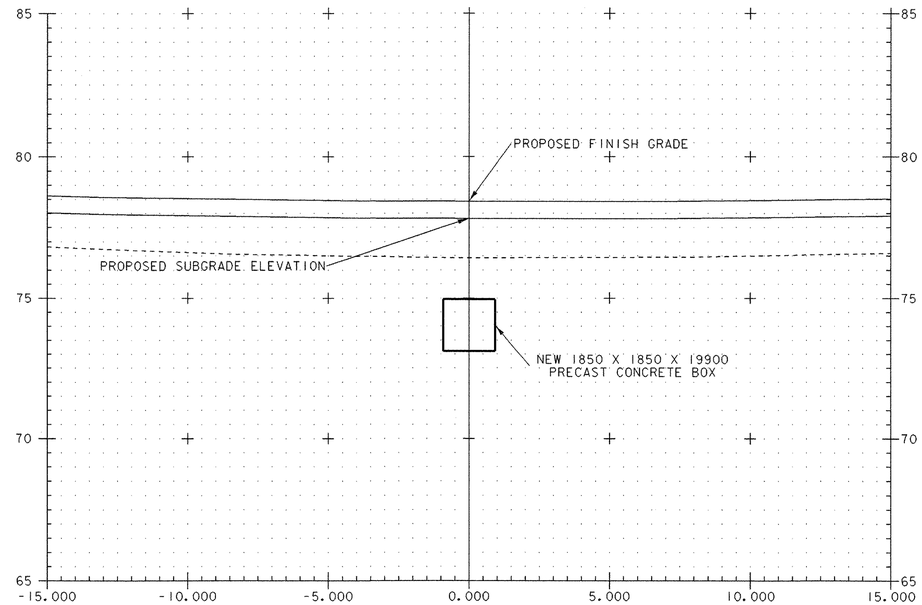

160+000.000

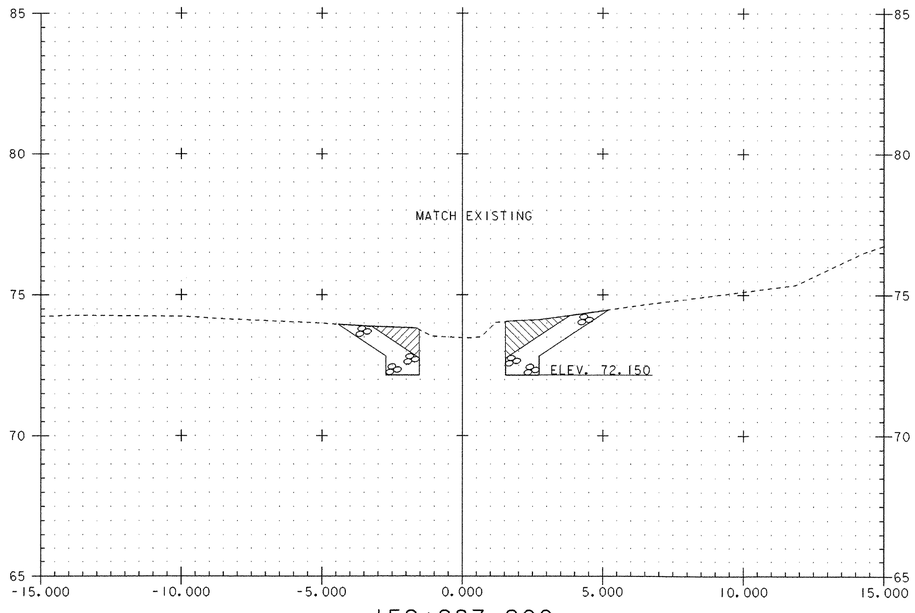

159+987.200

BEGIN TYPE II STONE FILL W/ GEOTEXTILE UNDER STONE FILL, GRUBBING MATERIAL, AND EROSION MATTING

NOTE: ALL CROSS-HATCHED AREAS REPRESENT GRUBBING MATERIAL

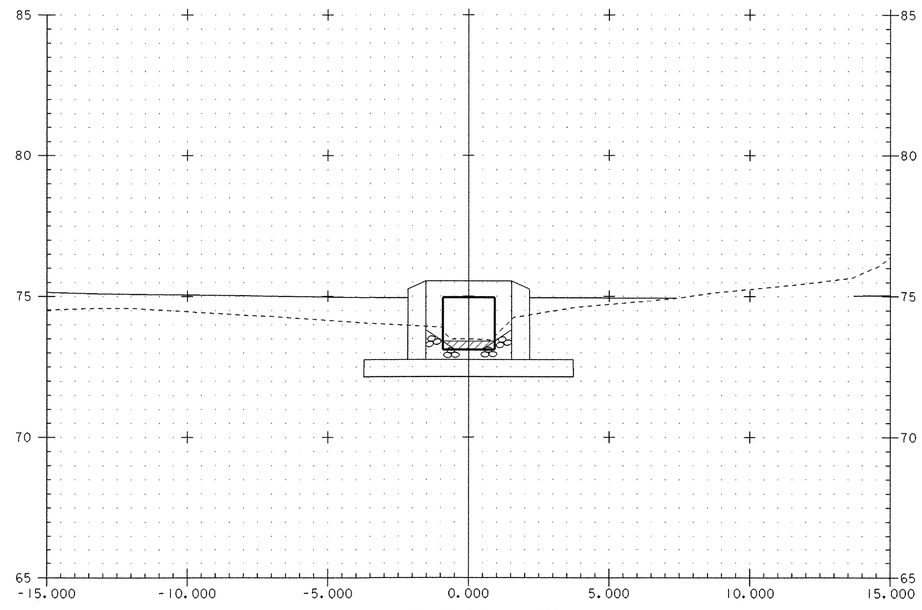

159+989.750

END TYPE II STONE FILL, GRUBBING MATERIAL, AND EROSION MATTING
STA. 159+899.15 END GEOTEXTILE UNDER STONE FILL

0 2 4 6 8 10
SCALE 1:100

BOX STA. 2+483.00 – CHANNEL SECTIONS

PROJECT NAME: HIGHGATE - FRANKLIN
PROJECT NUMBER: STP RS 0301(1) SA

FILE NAME: /85c060/str/s85c060xs.dgn
PROJECT LEADER: S. FARNSWORTH
DESIGNED BY: M. FOWLER
sc060xs2483a.i

PLOT DATE: 09-MAY-2005
DRAWN BY: R. PELLETT
CHECKED BY: G. SPILAK
SHEET 238 OF 450

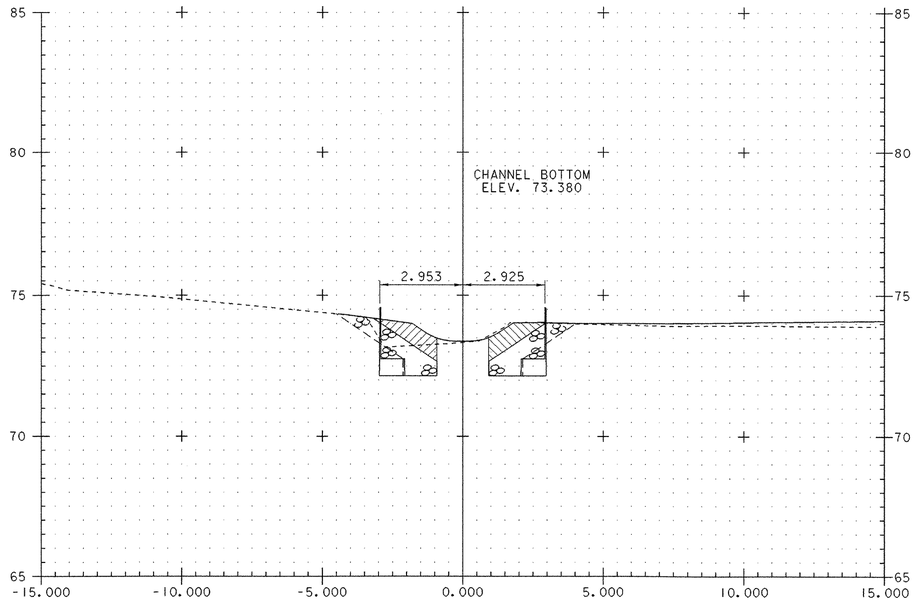

160+011.650

END GRUBBING MATERIAL

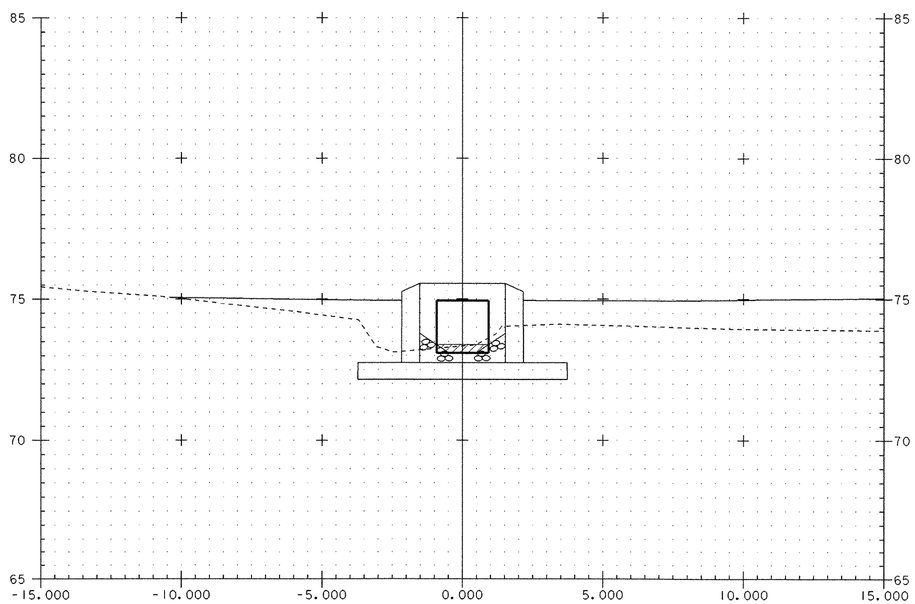

160+010.250

BEGIN TYPE II STONE FILL AND GRUBBING MATERIAL
STA. 160+010.850 GEOTEXTILE UNDER STONE FILL

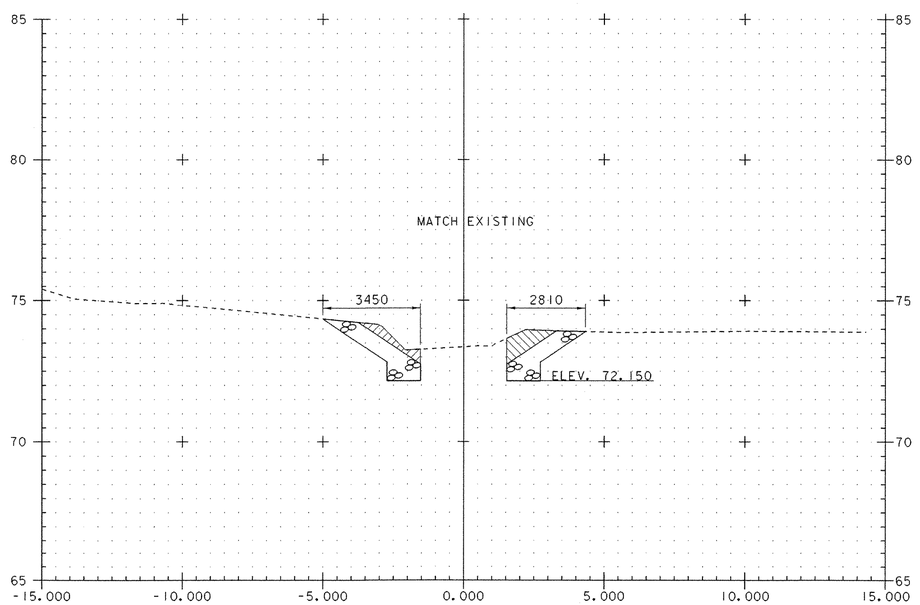

160+012.800

STA. 160+012.790 END TYPE II STONE FILL
STA. 160+012.340 END GEOTEXTILE UNDER STONE FILL

0 2 4 6 8 10
SCALE 1:100

BOX STA. 2+483.00 - CHANNEL SECTIONS

PROJECT NAME: HIGHGATE - FRANKLIN
PROJECT NUMBER: STP RS 0301(1) SA

FILE NAME: /85c060/str/s85c060xs.dgn
PROJECT LEADER: S. FARNSWORTH
DESIGNED BY: M. FOWLER
sc060xs2483b.i

PLOT DATE: 09-MAY-2005
DRAWN BY: R. PELLETT
CHECKED BY: G. SPILAK
SHEET 239 OF 450

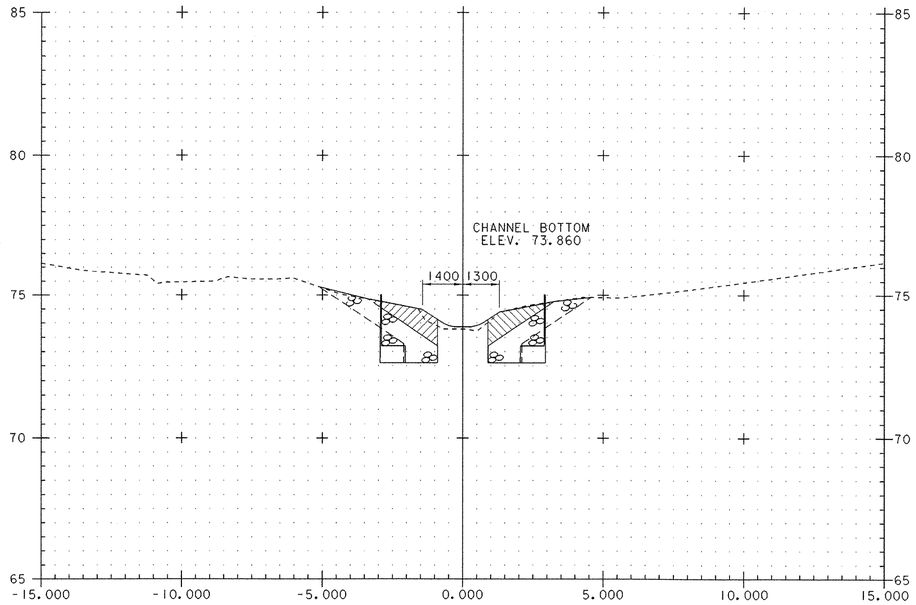

149+988.800

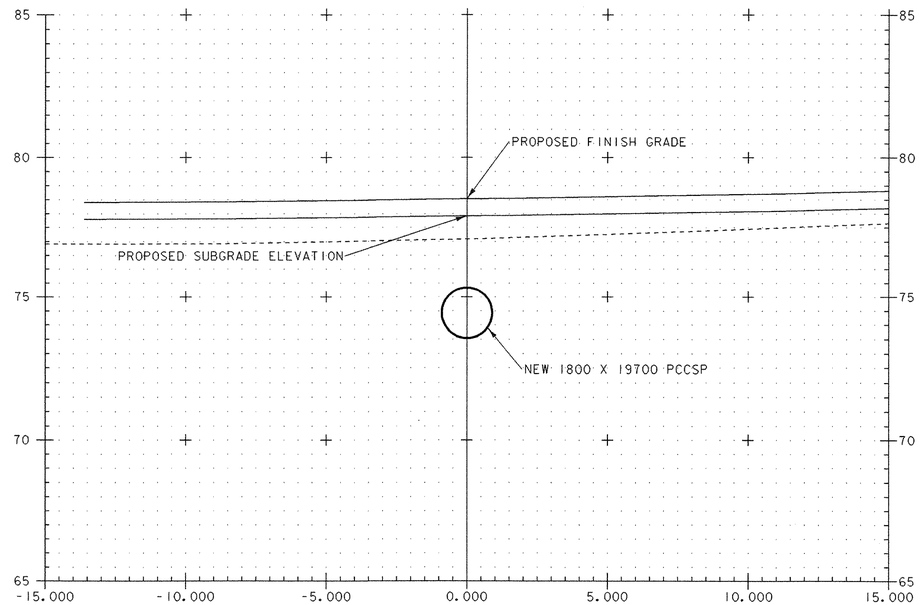

150+000.000

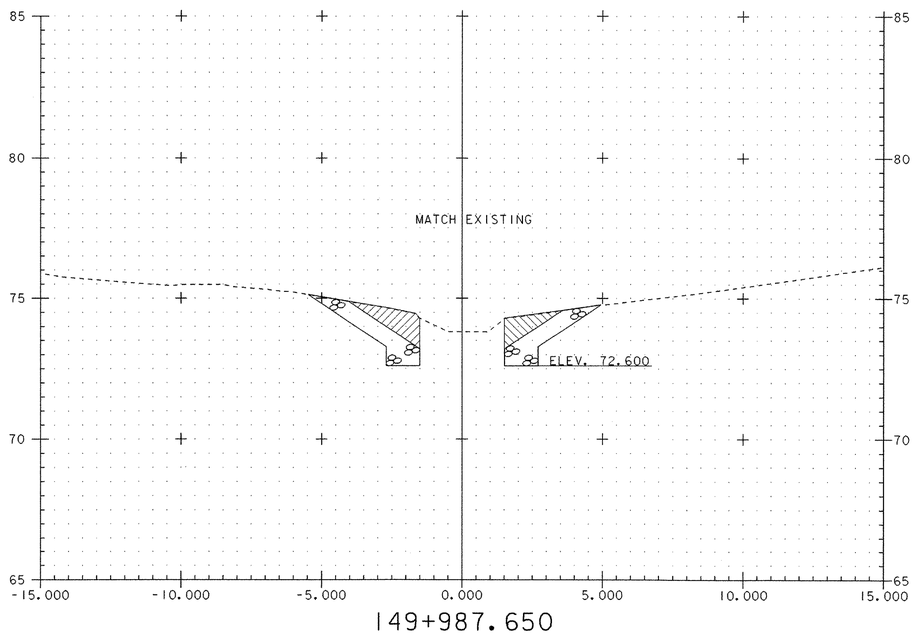

149+987.650

BEGIN TYPE II STONE FILL W/ GEOTEXTILE UNDER STONE FILL, GRUBBING MATERIAL, AND EROSION MATTING

NOTE: ALL CROSS-HATCHED AREAS REPRESENT GRUBBING MATERIAL

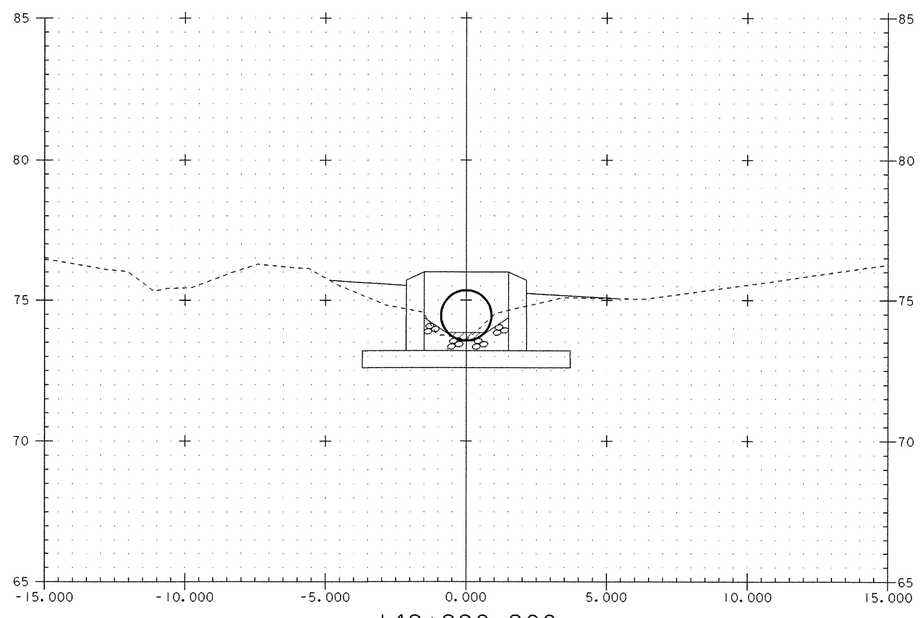

149+990.200

END TYPE II STONE FILL, GRUBBING MATERIAL, AND EROSION MATTING
STA. 149+989.600 END GEOTEXTILE UNDER STONE FILL

0 2 4 6 8 10
SCALE 1:100

PIPE STA. 3+148.50 – CHANNEL SECTIONS

PROJECT NAME: HIGHGATE - FRANKLIN
PROJECT NUMBER: STP RS 0301(I) SA

FILE NAME: /85c060/str/s85c060xs.dgn
PROJECT LEADER: S. FARNSWORTH
DESIGNED BY: M. FOWLER
sc060xs3148a.i

PLOT DATE: 09-MAY-2005
DRAWN BY: R. PELLETT
CHECKED BY: G. SPILAK
SHEET 240 OF 450

Metric

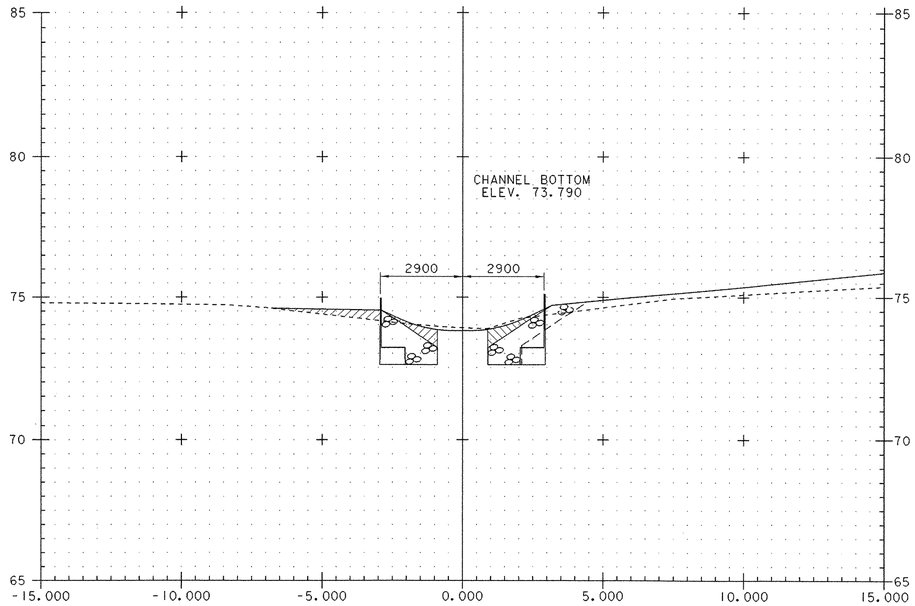

150+011.300

END GRUBBING MATERIAL

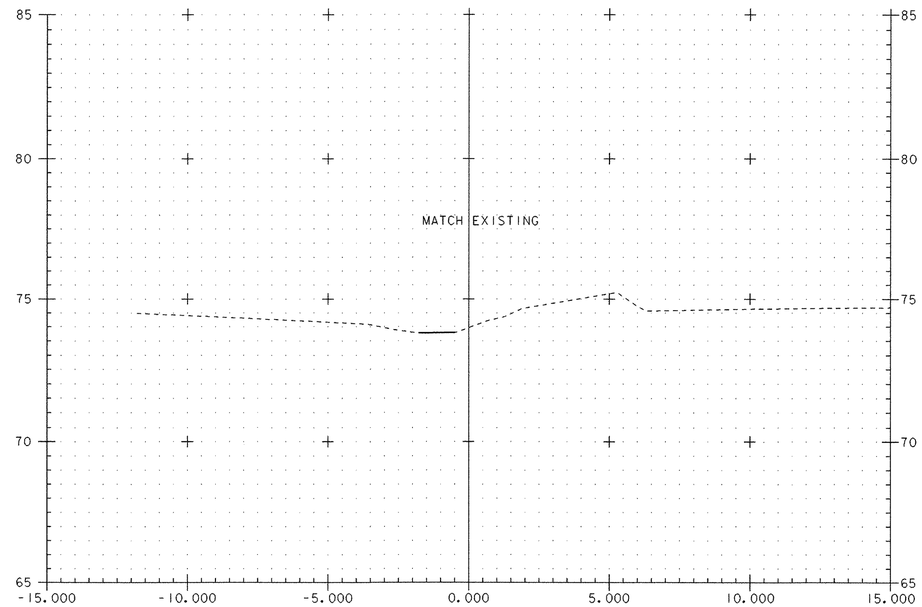

150+019.000

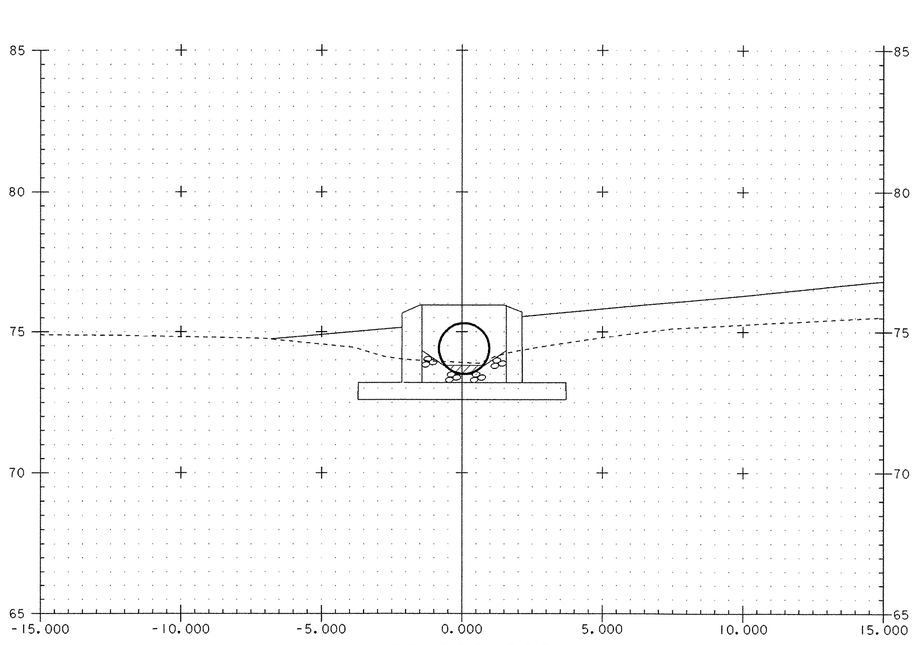

150+009.900

BEGIN TYPE II STONE FILL AND GRUBBING MATERIAL
STA. 150+010.500 GEOTEXTILE UNDER STONE FILL

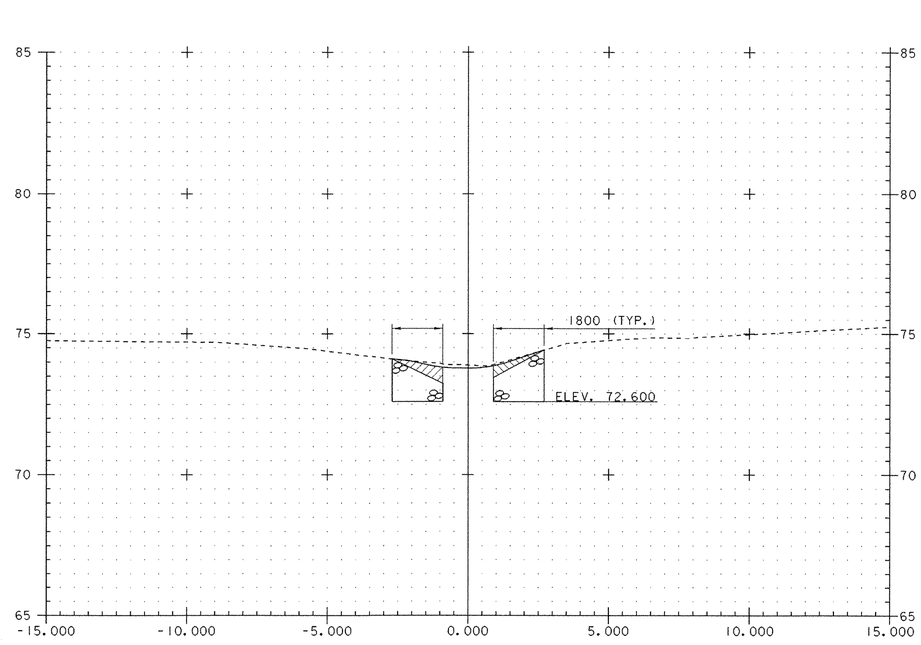

150+012.450

STA. 150+012.44 END TYPE II STONE FILL
STA. 150+011.99 END GEOTEXTILE UNDER STONE FILL

0 2 4 6 8 10

SCALE 1:100

PIPE STA. 3+148.50 – CHANNEL SECTIONS

PROJECT NAME: HIGHGATE - FRANKLIN
PROJECT NUMBER: STP RS 0301(I) SA

FILE NAME: /85c060/str/s85c060xs.dgn
PROJECT LEADER: S. FARNSWORTH
DESIGNED BY: M. FOWLER
sc060xs3148b.i

PLOT DATE: 09-MAY-2005
DRAWN BY: R. PELLETT
CHECKED BY: G. SPILAK
SHEET 241 OF 450

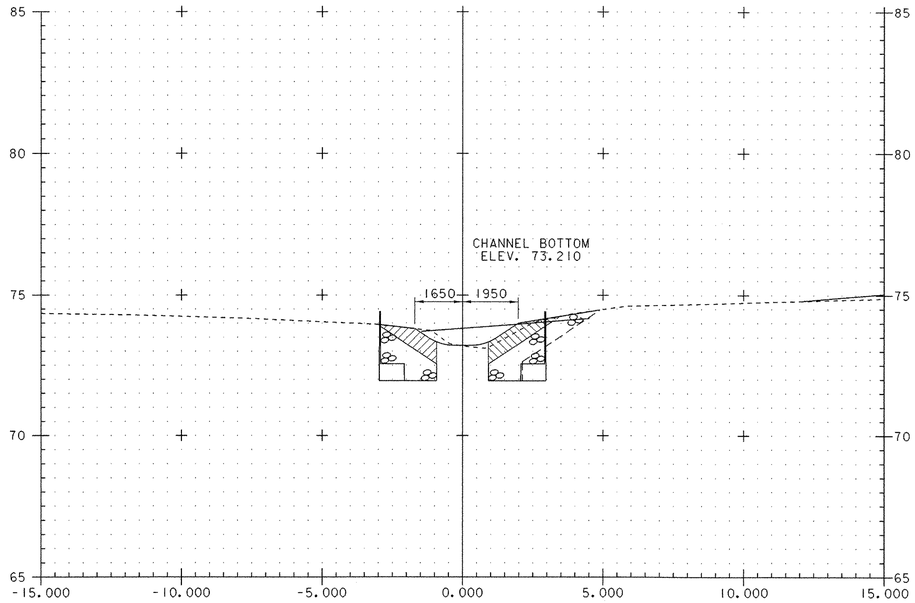

139+989.800

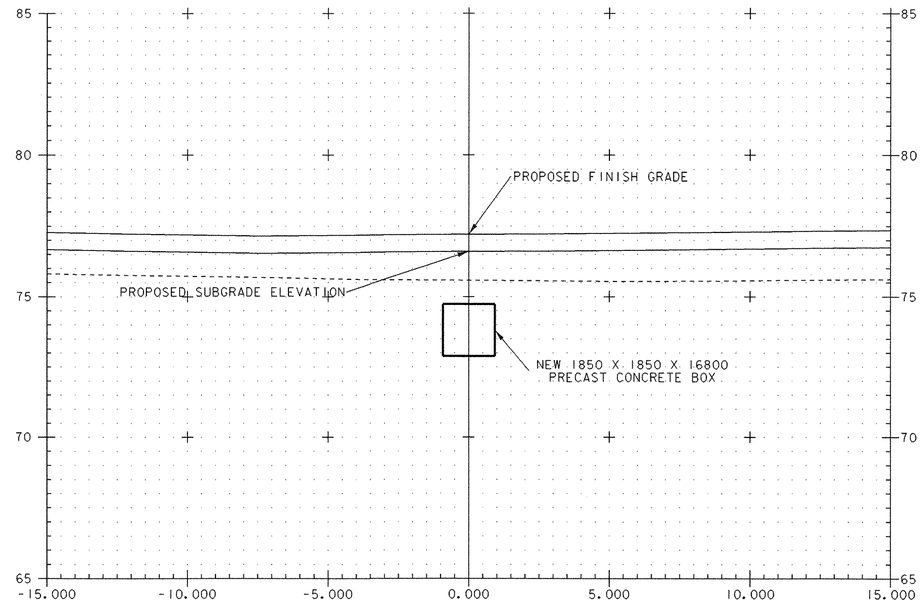

140+000.000

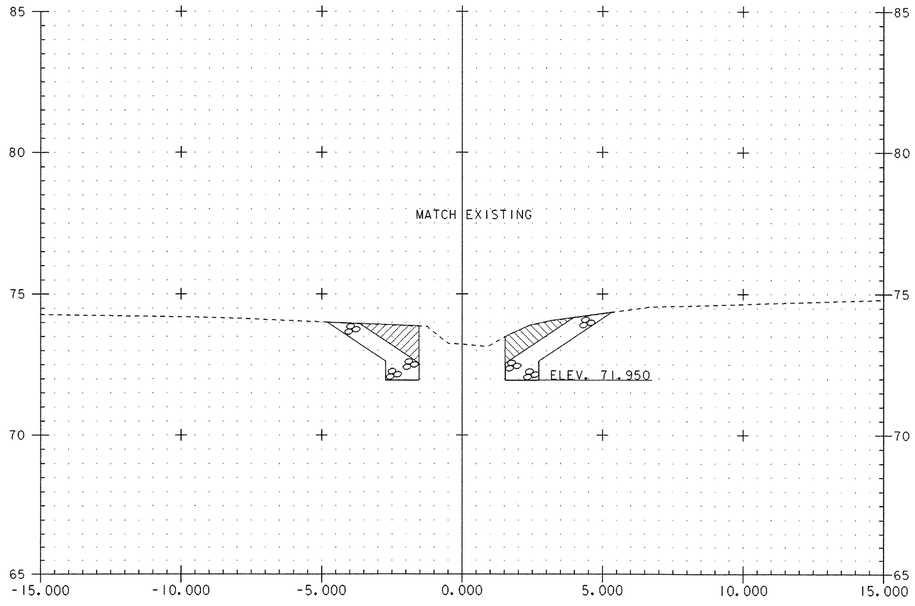

139+988.650

BEGIN TYPE II STONE FILL W/ GEOTEXTILE UNDER STONE FILL, GRUBBING MATERIAL, AND EROSION MATTING

NOTE: ALL CROSS-HATCHED AREAS REPRESENT GRUBBING MATERIAL

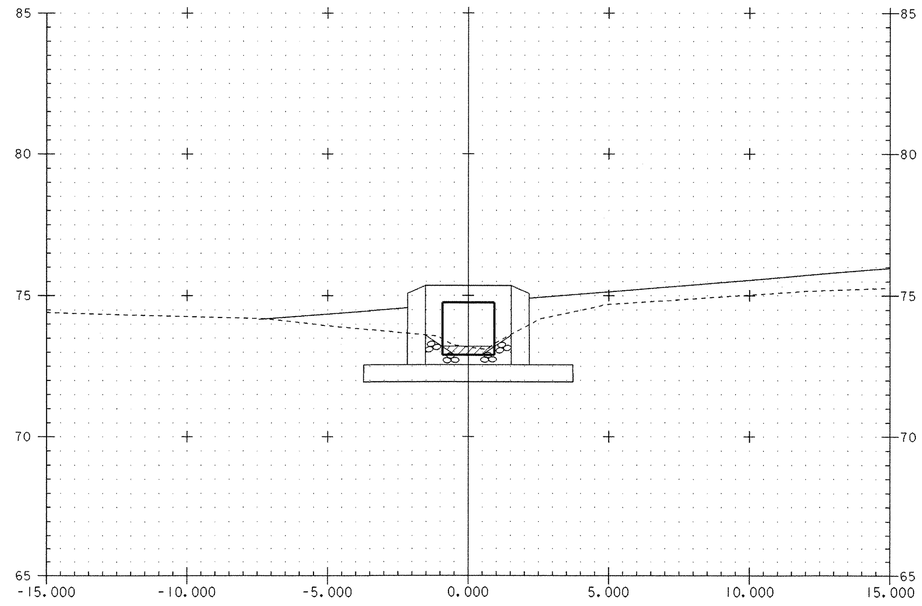

139+991.200

END TYPE II STONE FILL, GRUBBING MATERIAL, AND EROSION MATTING
STA. 139+990.600 END GEOTEXTILE UNDER STONE FILL

0 2 4 6 8 10
SCALE 1:100

BOX STA. 3+627.50 – CHANNEL SECTIONS

PROJECT NAME: HIGHGATE - FRANKLIN
PROJECT NUMBER: STP RS 0301(I) SA

FILE NAME: /85c060/str/s85c060xs.dgn
PROJECT LEADER: S. FARNSWORTH
DESIGNED BY: M. FOWLER
sc060xs3627a.i

PLOT DATE: 09-MAY-2005
DRAWN BY: R. PELLETT
CHECKED BY: G. SPILAK
SHEET 242 OF 450

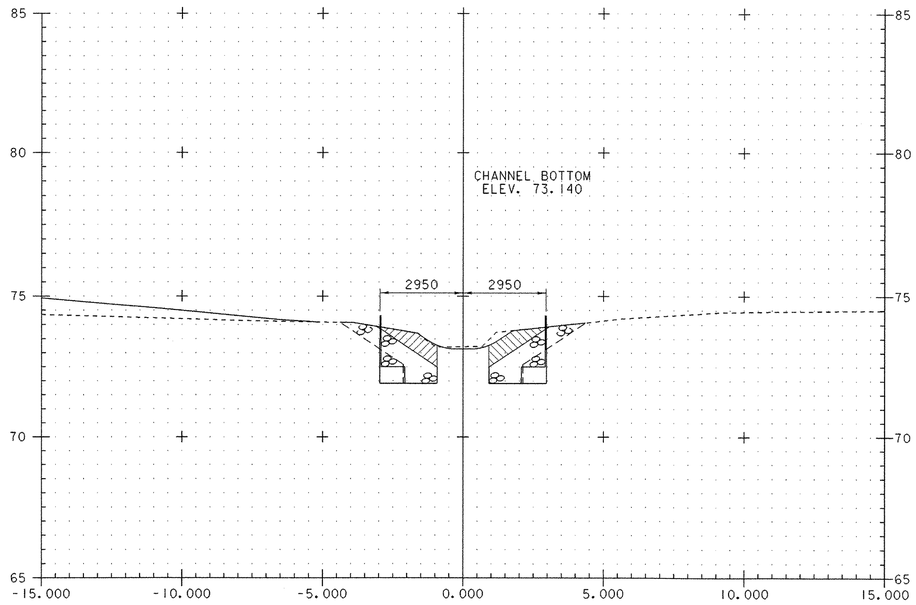

140+010.250

END GRUBBING MATERIAL

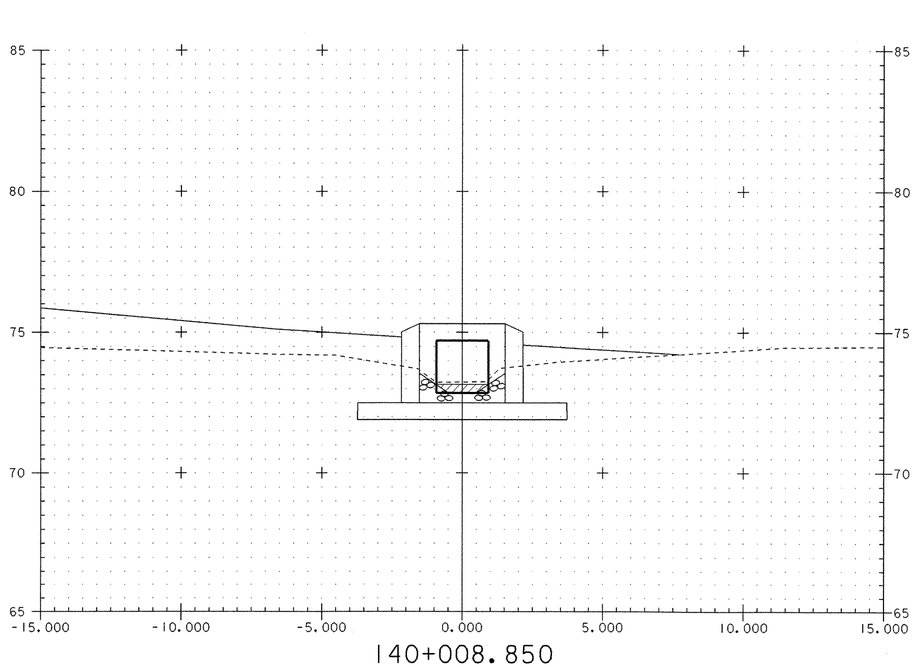

140+008.850

BEGIN TYPE II STONE FILL AND GRUBBING MATERIAL
STA. 140+009.450 GEOTEXTILE UNDER STONE FILL

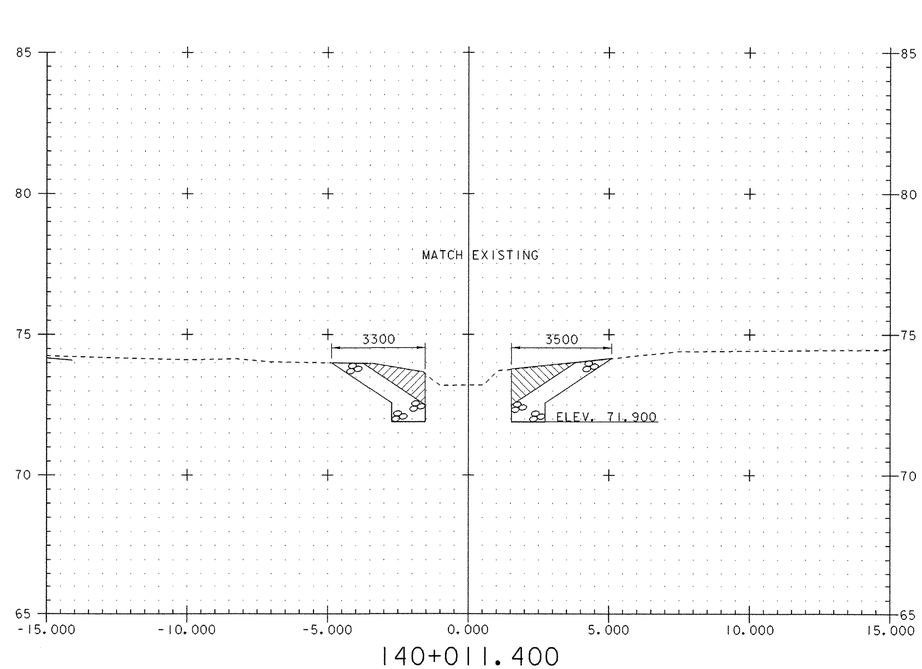

140+011.400

STA. 140+011.390 END TYPE II STONE FILL
STA. 140+010.940 END GEOTEXTILE UNDER STONE FILL

0 2 4 6 8 10
SCALE 1:100

BOX STA. 3+627.50 - CHANNEL SECTIONS

PROJECT NAME: HIGHGATE - FRANKLIN
PROJECT NUMBER: STP RS 0301(I) SA

FILE NAME: /85c060/str/s85c060xs.dgn
PROJECT LEADER: S. FARNSWORTH
DESIGNED BY: M. FOWLER
sc060xs3627b.i

PLOT DATE: 09-MAY-2005
DRAWN BY: R. PELLETT
CHECKED BY: G. SPILAK
SHEET 243 OF 450

Metric

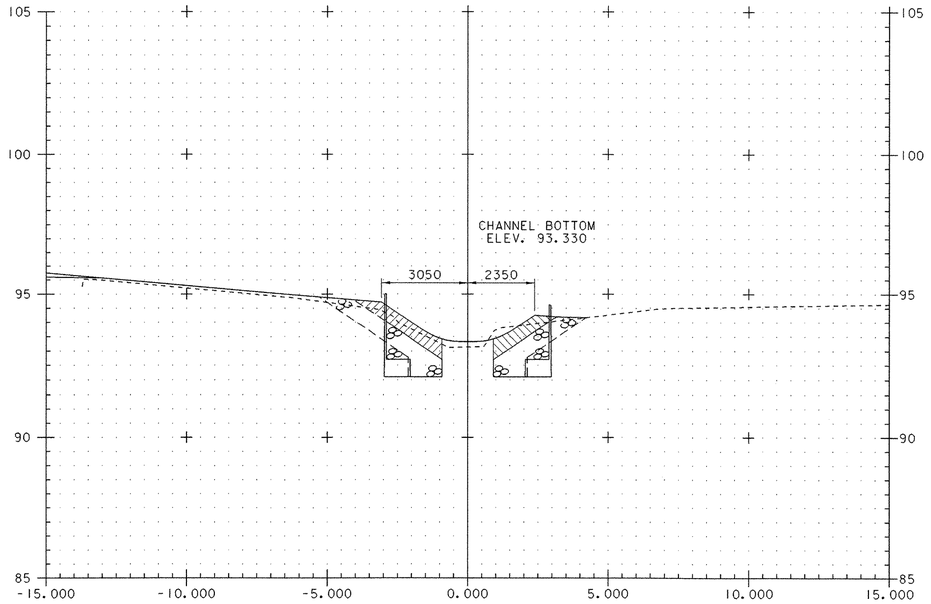

129+991.450

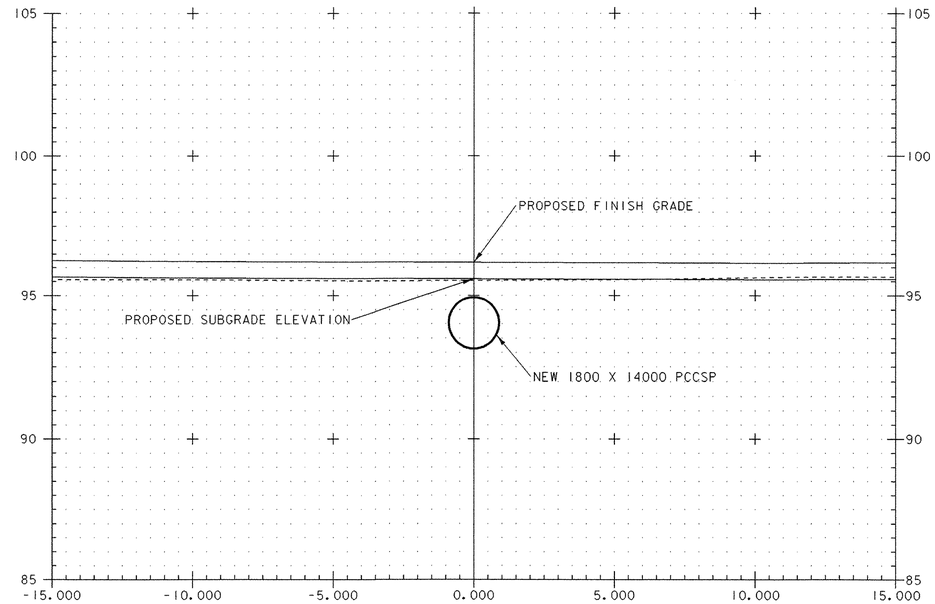

130+000.000

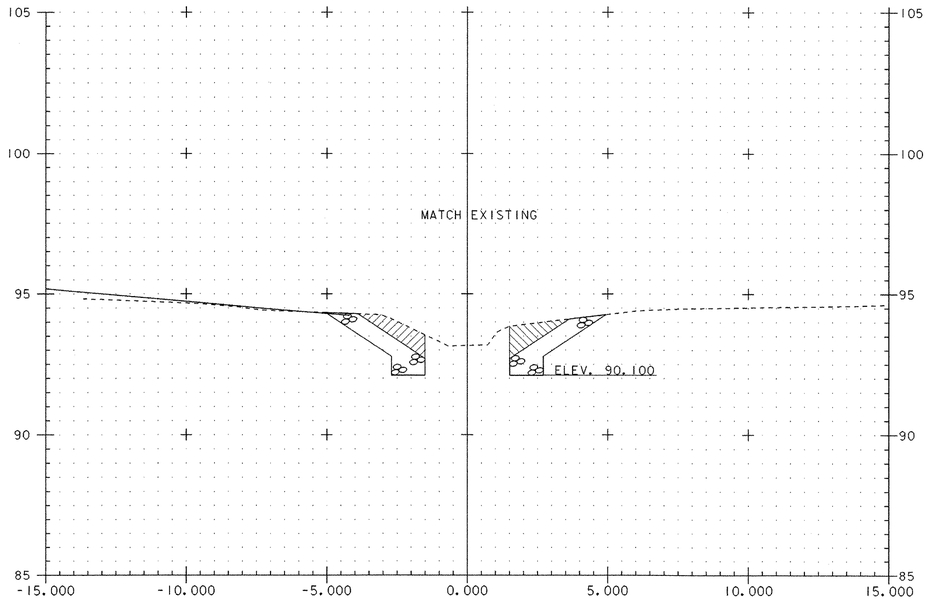

129+990.300

BEGIN TYPE II STONE FILL W/ GEOTEXTILE UNDER STONE FILL, GRUBBING MATERIAL, AND EROSION MATTING

NOTE: ALL CROSS-HATCHED AREAS REPRESENT GRUBBING MATERIAL

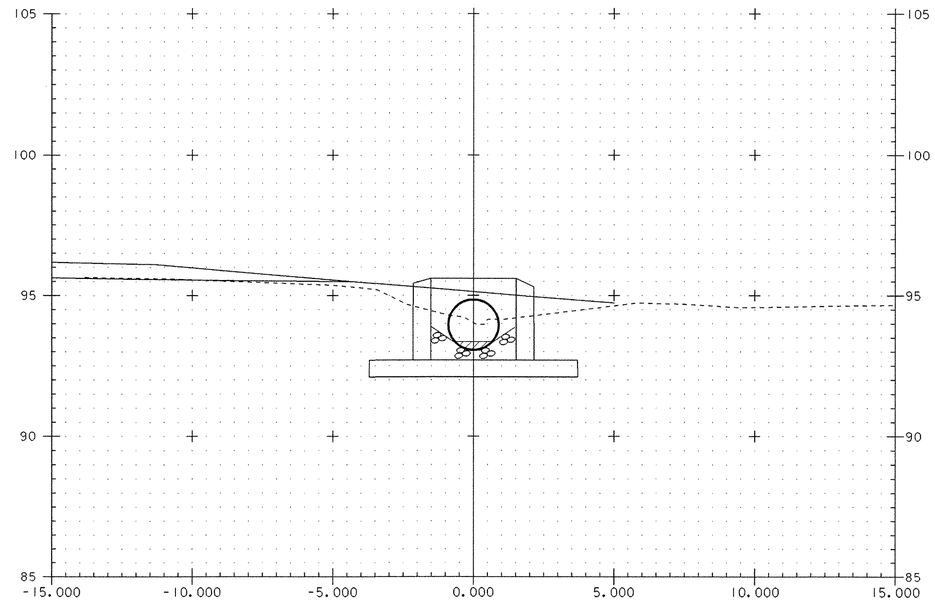

129+992.840

END TYPE II STONE FILL, GRUBBING MATERIAL, AND EROSION MATTING
STA. 129+992.240 END GEOTEXTILE UNDER STONE FILL

0 2 4 6 8 10
SCALE 1:100

PIPE STA. 6+189.25 – CHANNEL SECTIONS

PROJECT NAME: HIGHGATE - FRANKLIN
PROJECT NUMBER: STP RS 0301(1) SA

FILE NAME: /85c060/str/s85c060xs.dgn
PROJECT LEADER: S. FARNSWORTH
DESIGNED BY: M. FOWLER
sc060xs6189a.1

PLOT DATE: 09-MAY-2005
DRAWN BY: R. PELLETT
CHECKED BY: G. SPILAK
SHEET 244 OF 450

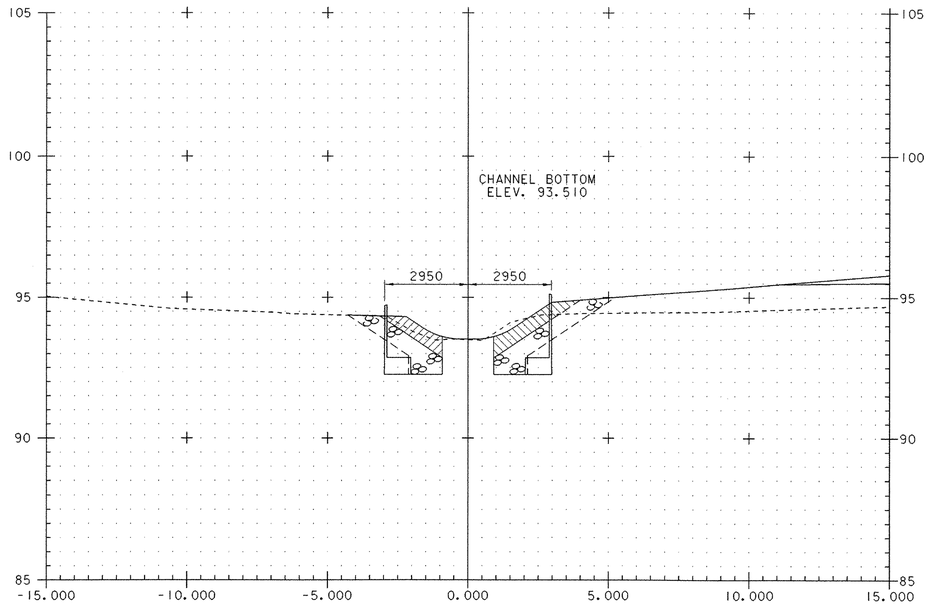

130+008.250

END GRUBBING MATERIAL

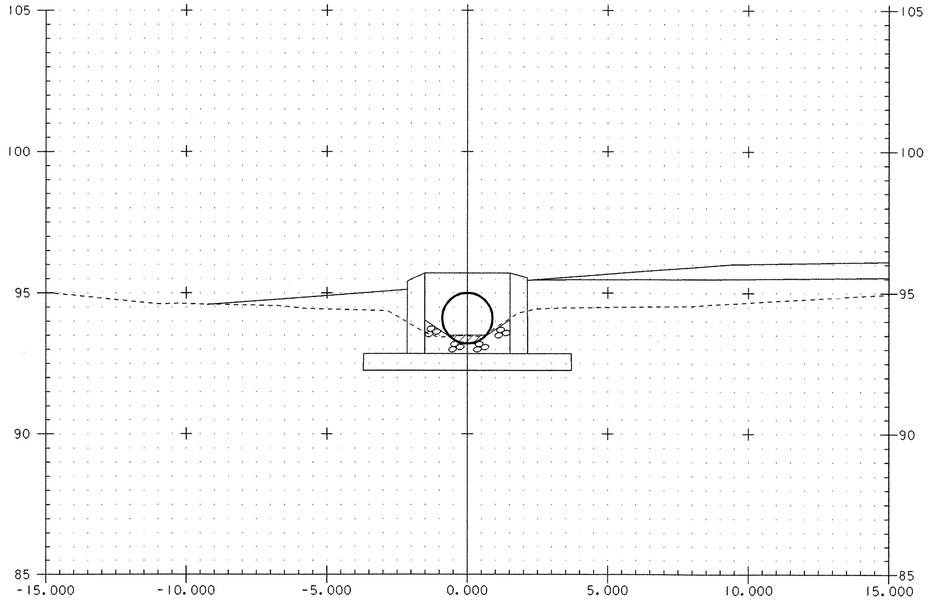

130+006.860

BEGIN TYPE II STONE FILL AND GRUBBING MATERIAL
STA. 130+007.460 GEOTEXTILE UNDER STONE FILL

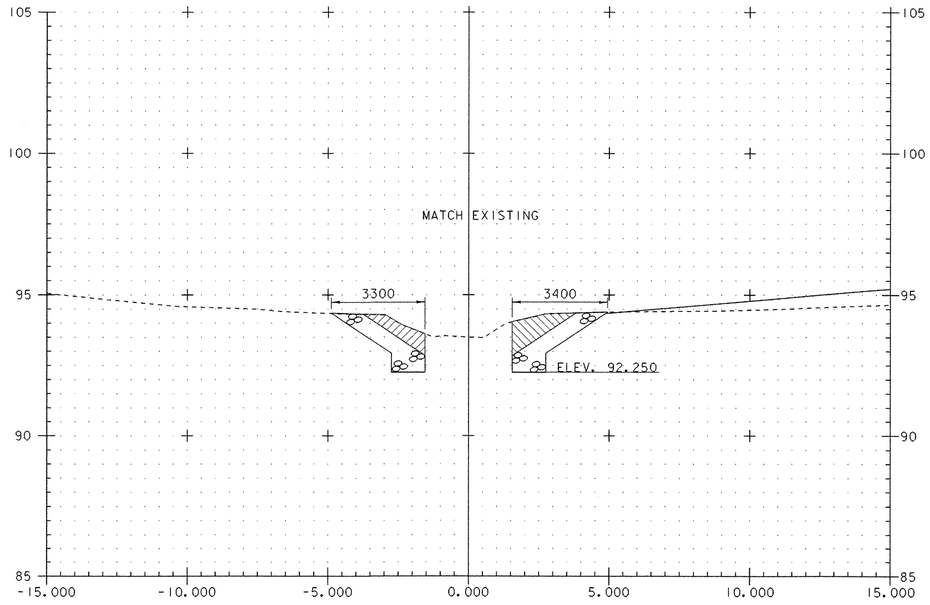

130+009.450

STA. 130+009.440 END TYPE II STONE FILL
STA. 130+008.990 END GEOTEXTILE UNDER STONE FILL

0 2 4 6 8 10
SCALE 1:100

PIPE STA. 6+189.25 – CHANNEL SECTIONS

PROJECT NAME: HIGHGATE - FRANKLIN
PROJECT NUMBER: STP RS 0301(1) SA

FILE NAME: /85c060/str/s85c060xs.dgn
PROJECT LEADER: S. FARNSWORTH
DESIGNED BY: M. FOWLER
sc060xs6189b.i

PLOT DATE: 09-MAY-2005
DRAWN BY: R. PELLETT
CHECKED BY: G. SPILAK
SHEET 245 OF 450

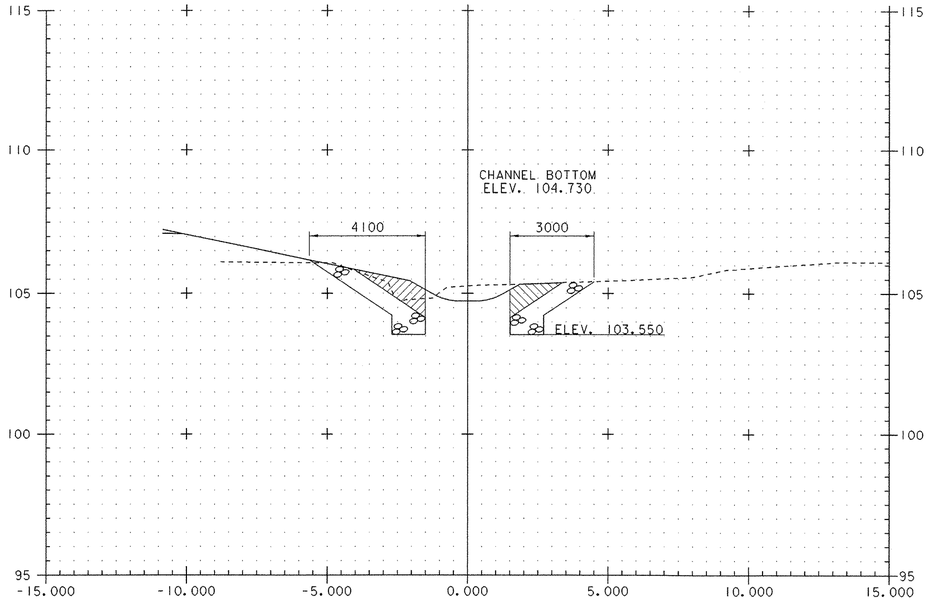

119+988.600

BEGIN TYPE II STONE FILL W/ GEOTEXTILE UNDER STONE FILL, GRUBBING MATERIAL, AND EROSION MATTING

NOTE: ALL CROSS-HATCHED AREAS REPRESENT GRUBBING MATERIAL

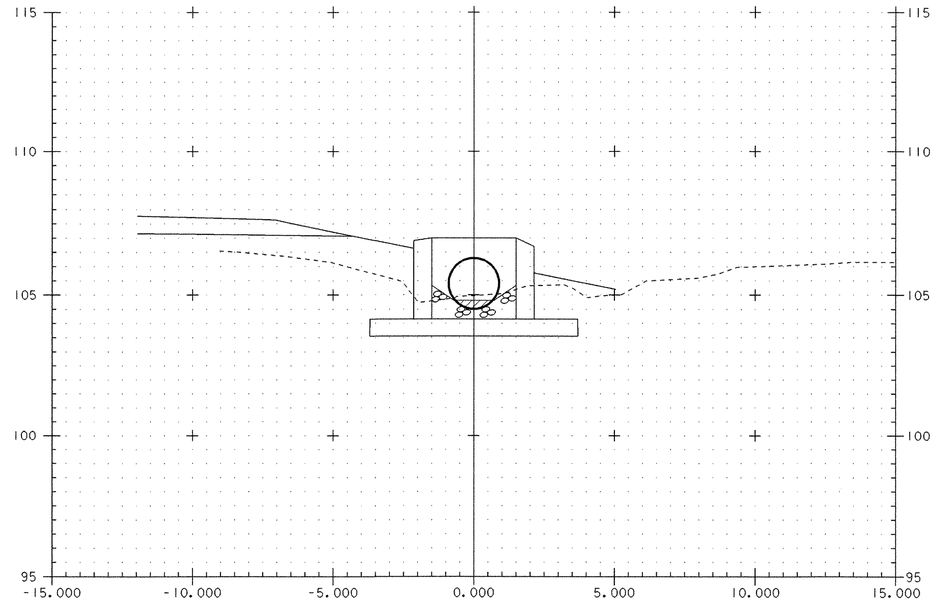

119+991.150

END TYPE II STONE FILL, GRUBBING MATERIAL, AND EROSION MATTING
STA. 119+990.550 END GEOTEXTILE UNDER STONE FILL

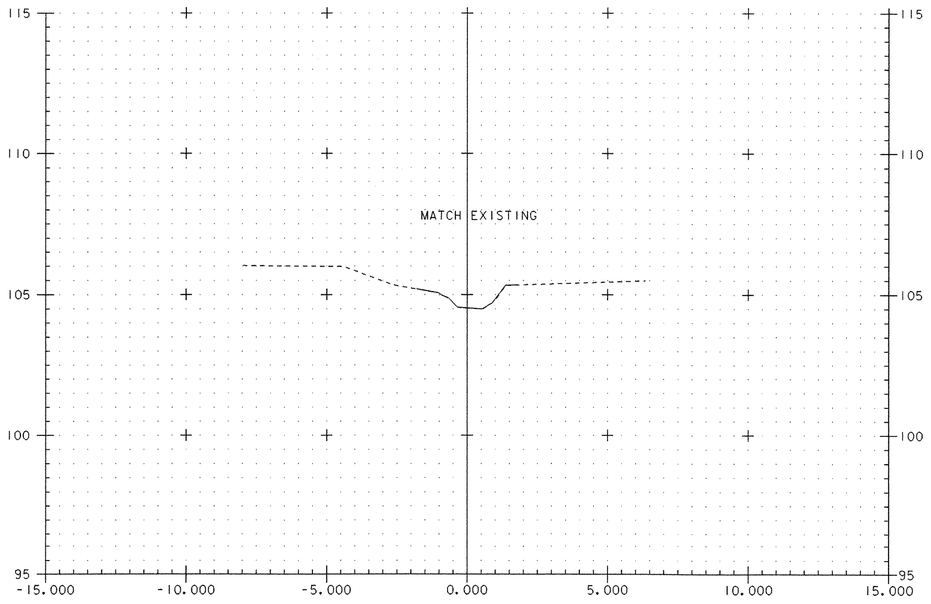

119+985.000

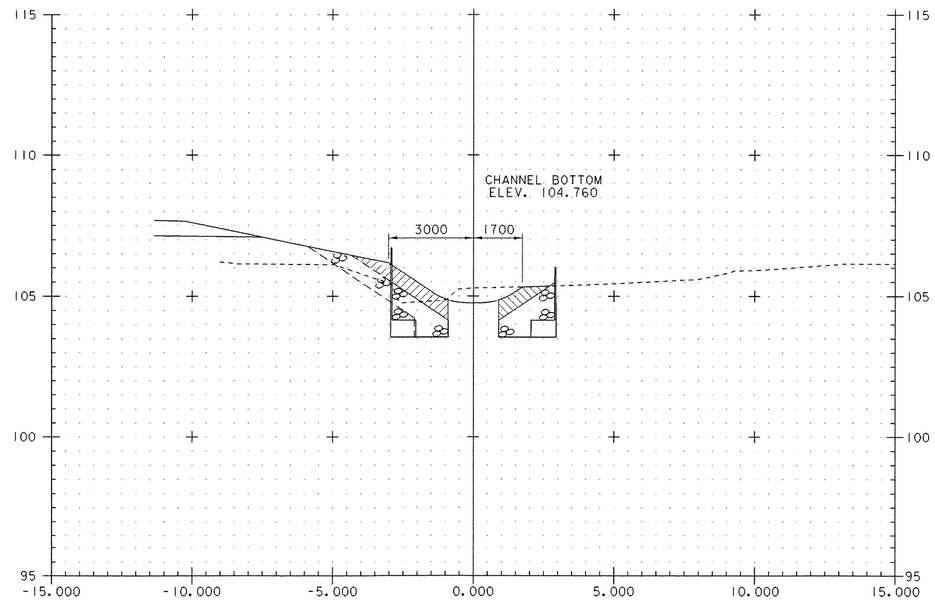

119+989.750

0 2 4 6 8 10
SCALE 1:100

PIPE STA. 8+744.50 – CHANNEL SECTIONS

PROJECT NAME: HIGHGATE - FRANKLIN
PROJECT NUMBER: STP RS 0301(1) SA

FILE NAME: /85c060/str/s85c060xs.dgn
PROJECT LEADER: S. FARNSWORTH
DESIGNED BY: M. FOWLER
sc060xs8744a.i

PLOT DATE: 09-MAY-2005
DRAWN BY: R. PELLETT
CHECKED BY: G. SPILAK
SHEET 246 OF 450

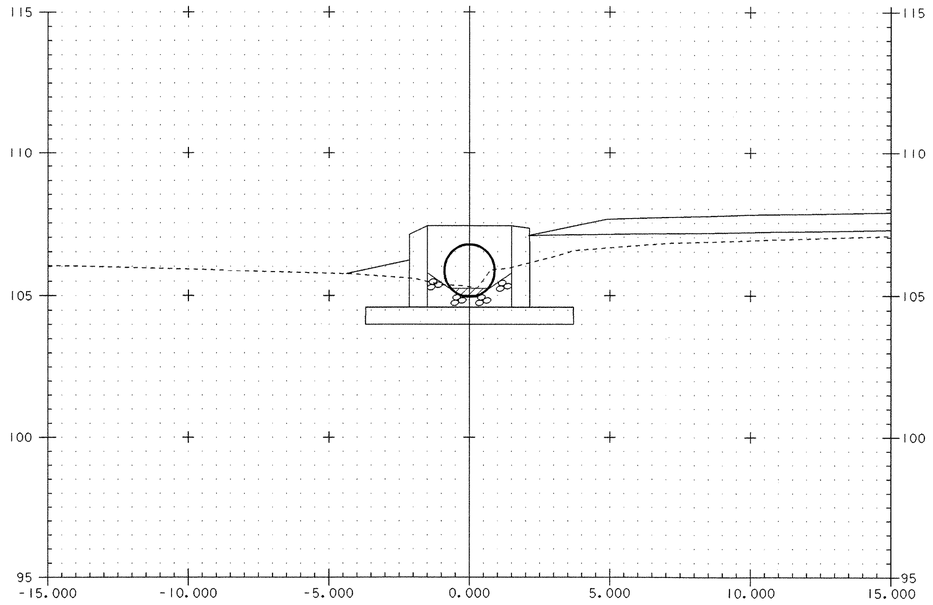

120+007.900

BEGIN TYPE II STONE FILL AND GRUBBING MATERIAL
STA. 120+008.500 GEOTEXTILE UNDER STONE FILL

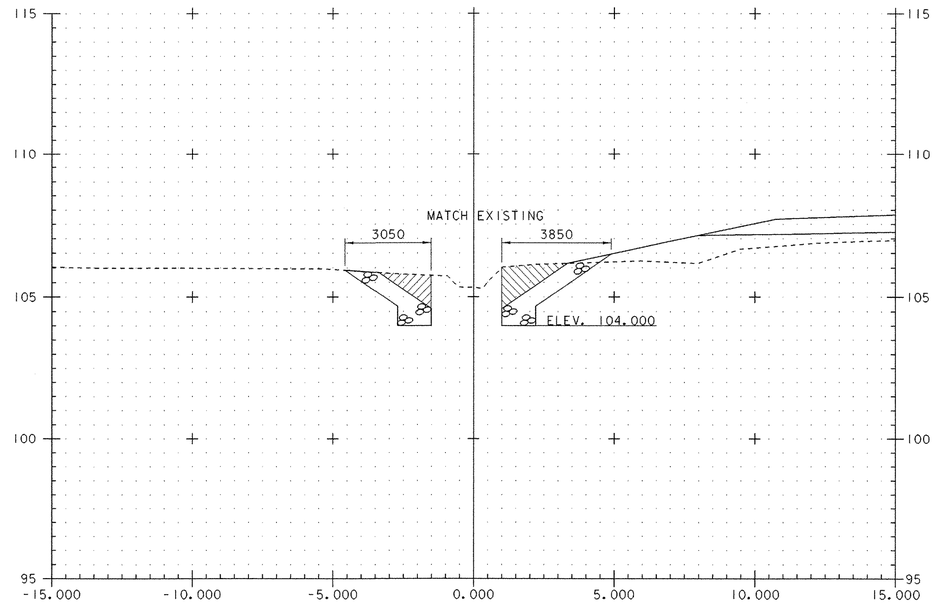

120+010.450

STA. 120+010.440 END TYPE II STONE FILL
STA. 120+009.990 END GEOTEXTILE UNDER STONE FILL

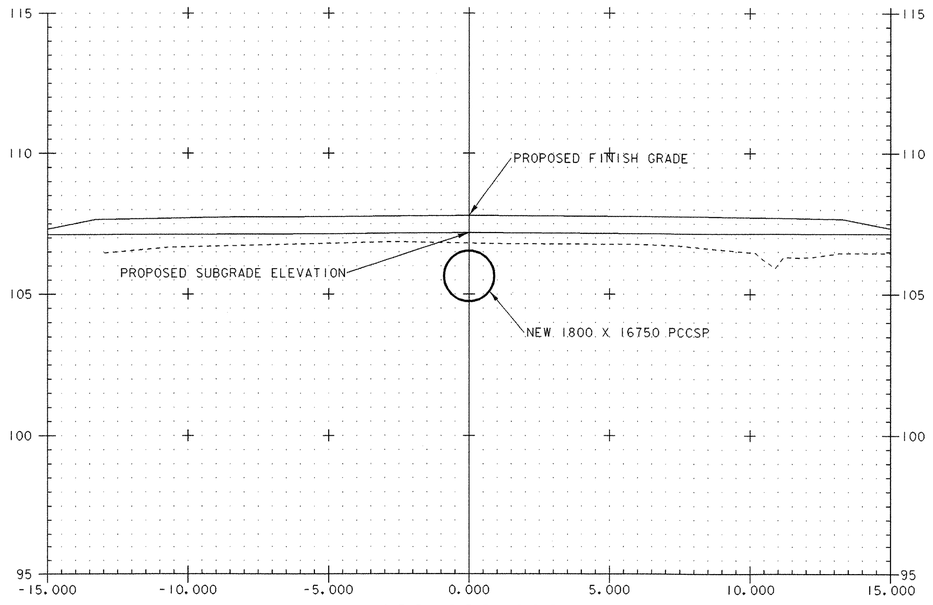

120+000.000

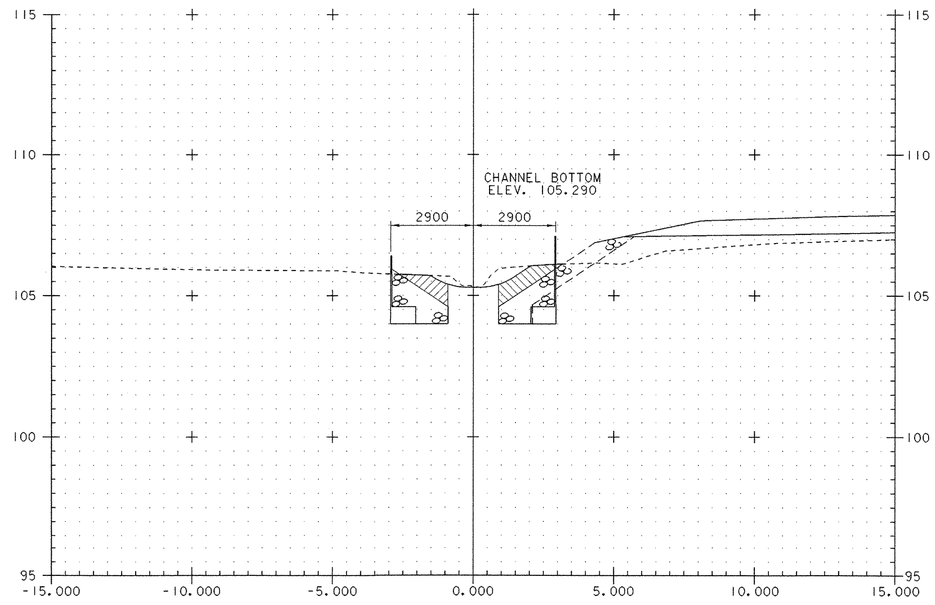

120+009.300

END GRUBBING MATERIAL

0 2 4 6 8 10
SCALE 1:100

PIPE STA. 8+744.50 – CHANNEL SECTIONS

PROJECT NAME: HIGHGATE - FRANKLIN
PROJECT NUMBER: STP RS 0301(I) SA

FILE NAME: /85c060/str/s85c060xs.dgn
PROJECT LEADER: S. FARNSWORTH
DESIGNED BY: M. FOWLER
sc060xs8744b.I

PLOT DATE: 09-MAY-2005
DRAWN BY: R. PELLETT
CHECKED BY: G. SPILAK
SHEET 247 OF 450

BEGIN PROJECT = 1+000.000

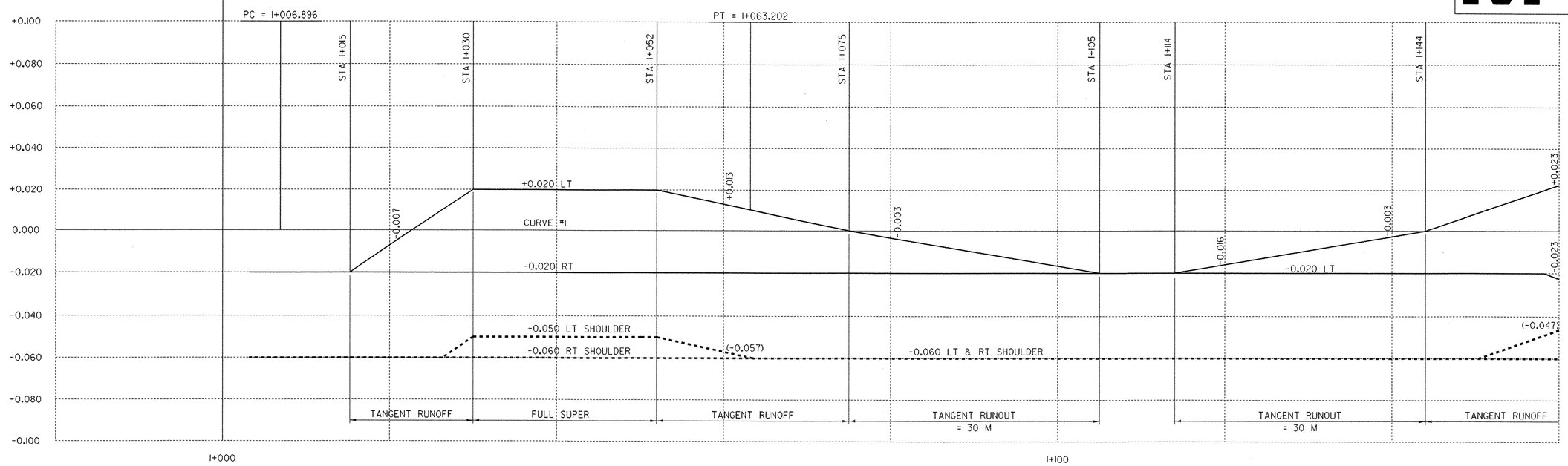

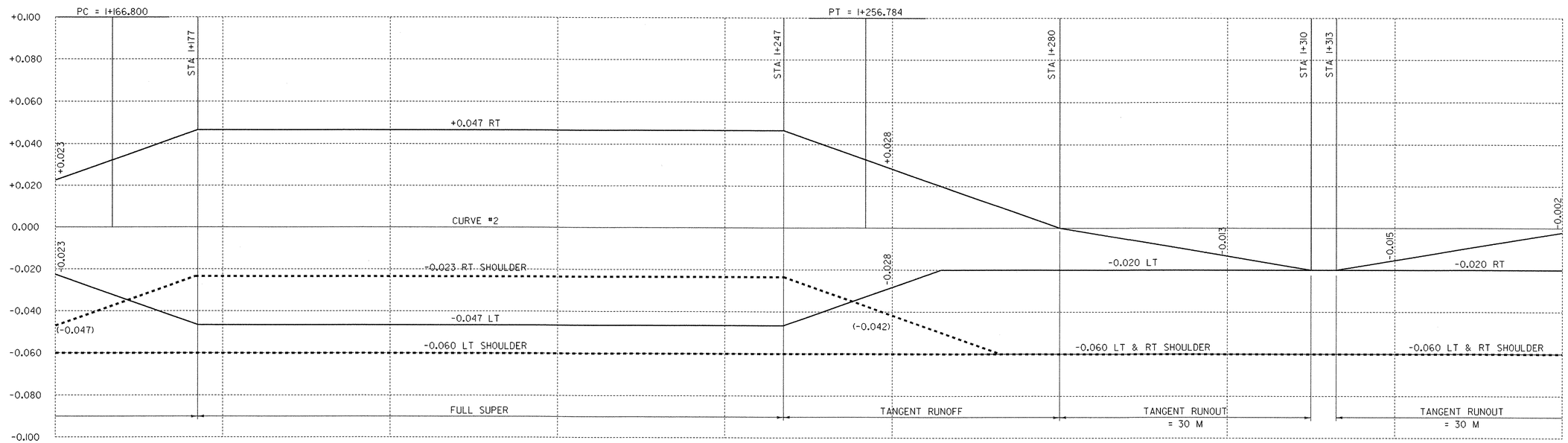

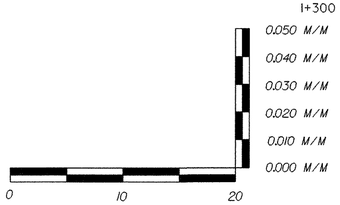

HORIZONTAL SCALE = 1:250

VERTICAL SCALE = 1:100

PROJECT NAME: HIGHGATE - FRANKLIN

PROJECT NUMBER: STP RS 0301(1) SA

FILE NAME: ...85c060/design/dc060xsl.dgn
PROJECT LEADER: DELLASANTA
DESIGNED BY: SQUAD B
IPARM FILE NAME: dc060b01.i

PLOT DATE: 09-MAY-2005
DRAWN BY: SQUAD B
CHECKED BY: SQUAD B
SHEET 248 OF 450

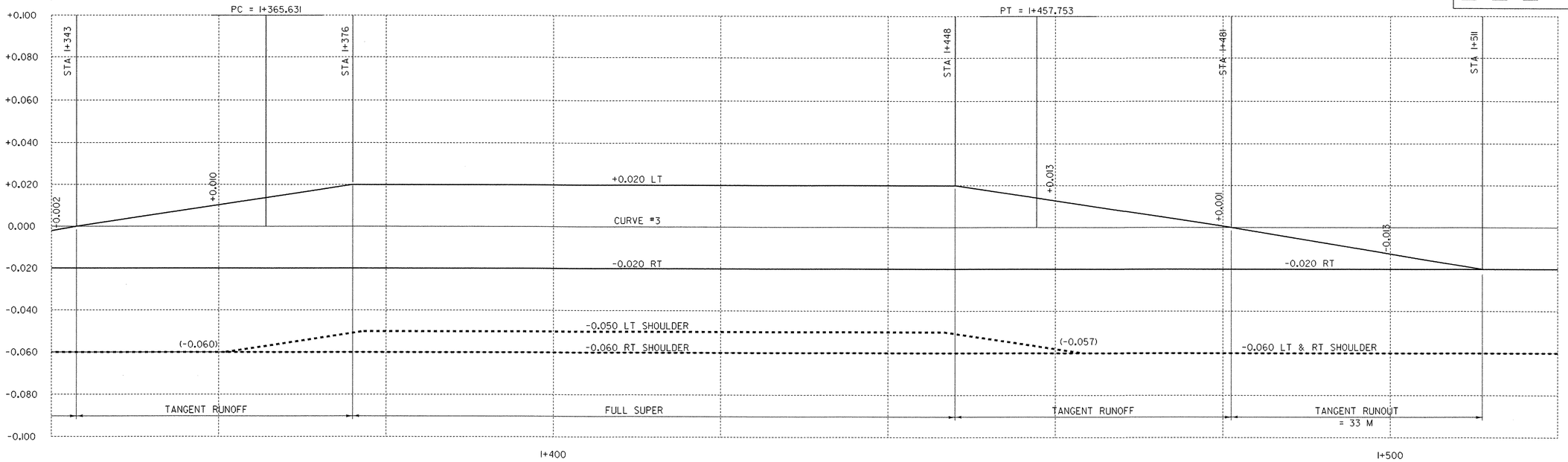

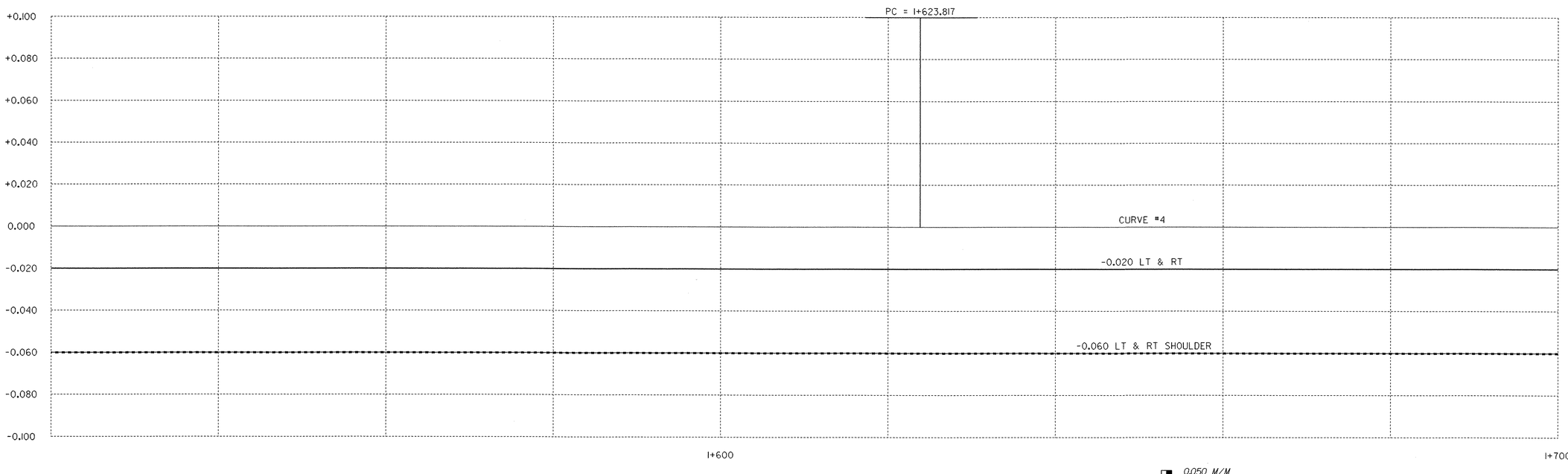

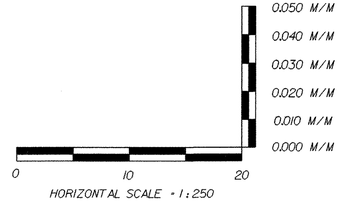

PROJECT NAME:	HIGHGATE - FRANKLIN
PROJECT NUMBER:	STP RS 0301(1) SA
FILE NAME: ...85c060/design/dc060xsl.dgn	PLOT DATE: 09-MAY-2005
PROJECT LEADER: DELLASANTA	DRAWN BY: SQUAD B
DESIGNED BY: SQUAD B	CHECKED BY: SQUAD B
IPARM FILE NAME: dc060b02.i	SHEET 249 OF 450

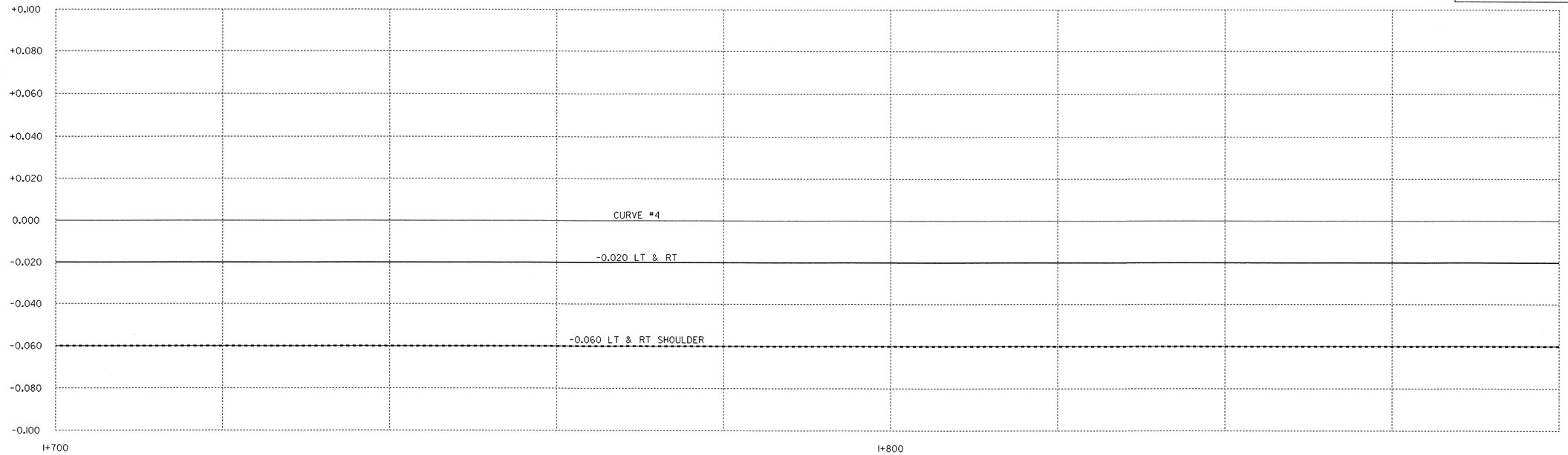

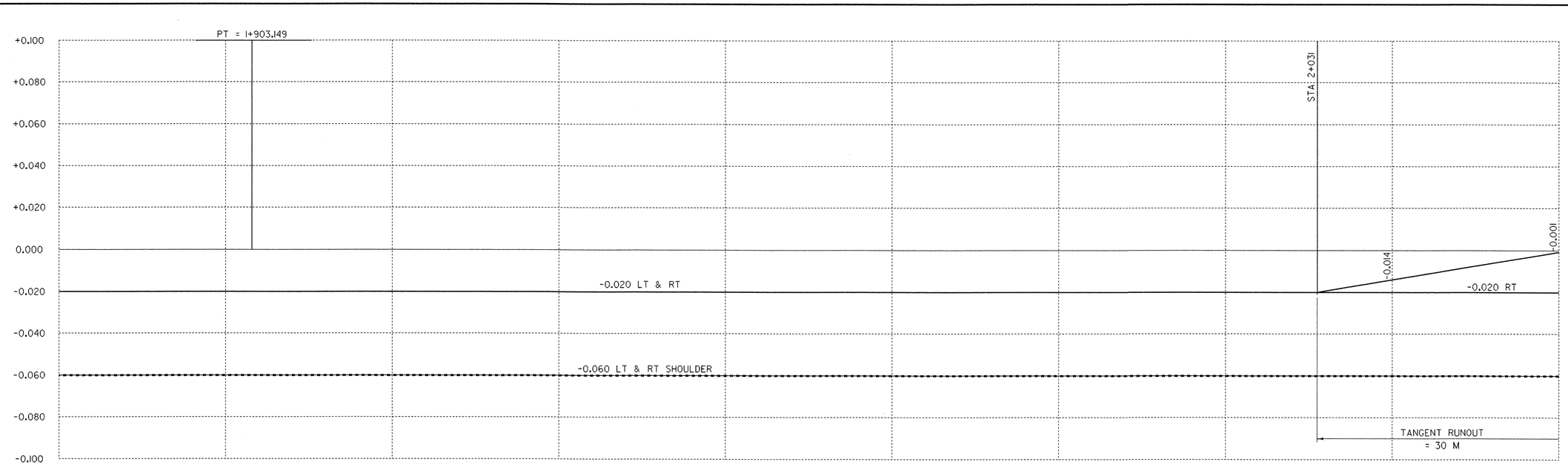

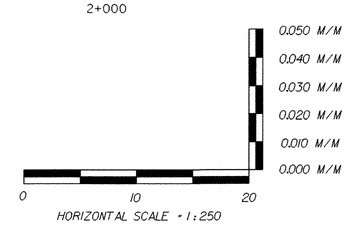

HORIZONTAL SCALE = 1:250
VERTICAL SCALE = 1:100

PROJECT NAME: HIGHGATE - FRANKLIN	
PROJECT NUMBER: STP RS 0301(1) SA	
FILE NAME: ...85c060/design/dc060xsl.dgn	PLOT DATE: 09-MAY-2005
PROJECT LEADER: DELLASANTA	DRAWN BY: SQUAD B
DESIGNED BY: SQUAD B	CHECKED BY: SQUAD B
IPARM FILE NAME: dc060b03.i	SHEET 250 OF 450

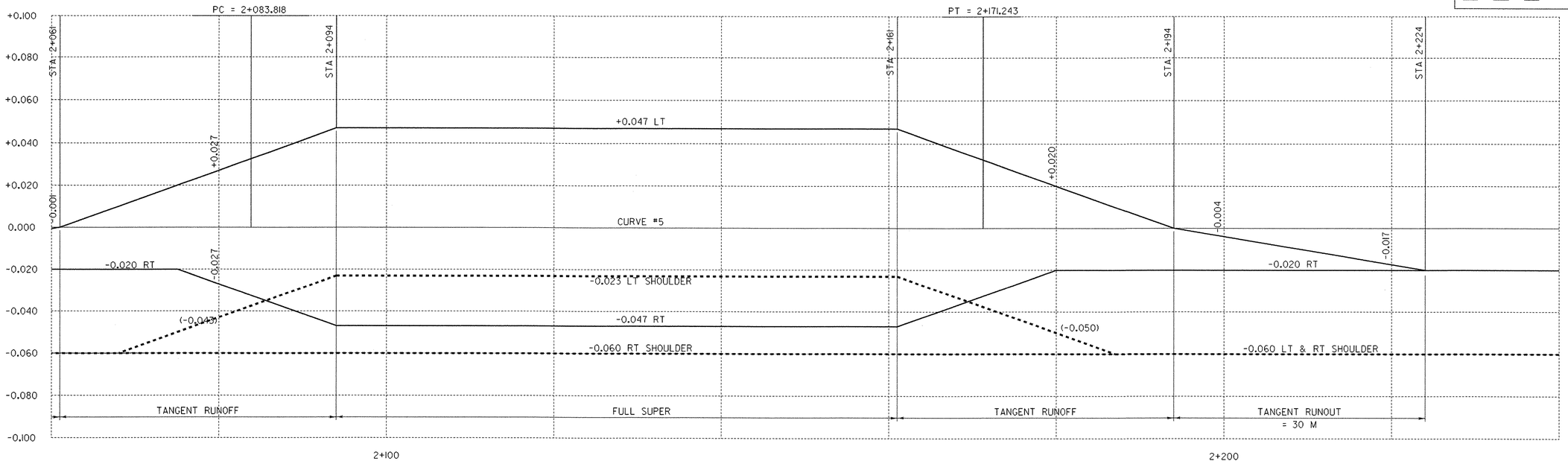

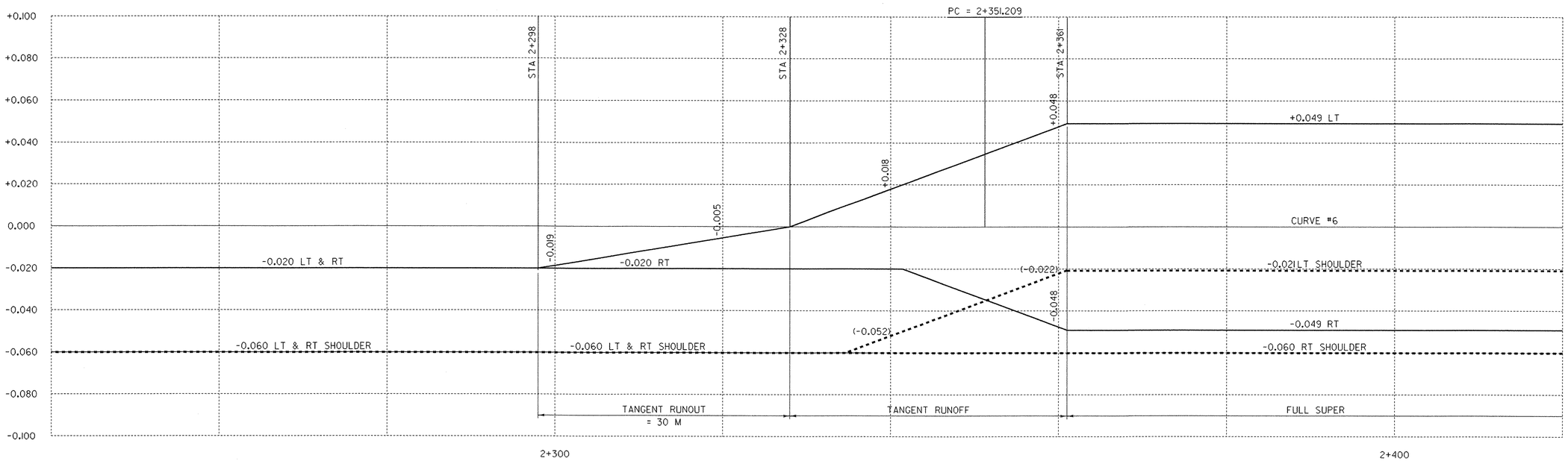

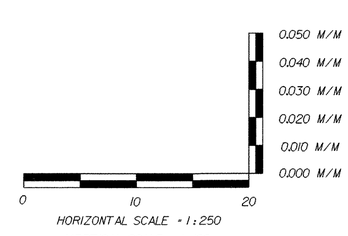

HORIZONTAL SCALE = 1:250
VERTICAL SCALE = 1:100

PROJECT NAME: HIGHGATE - FRANKLIN	
PROJECT NUMBER: STP RS 0301(1) SA	
FILE NAME: ...85c060/design/dc060xsl.dgn	PLOT DATE: 09-MAY-2005
PROJECT LEADER: DELLASANTA	DRAWN BY: SQUAD B
DESIGNED BY: SQUAD B	CHECKED BY: SQUAD B
IPARM FILE NAME: dc060b04.i	SHEET 251 OF 450

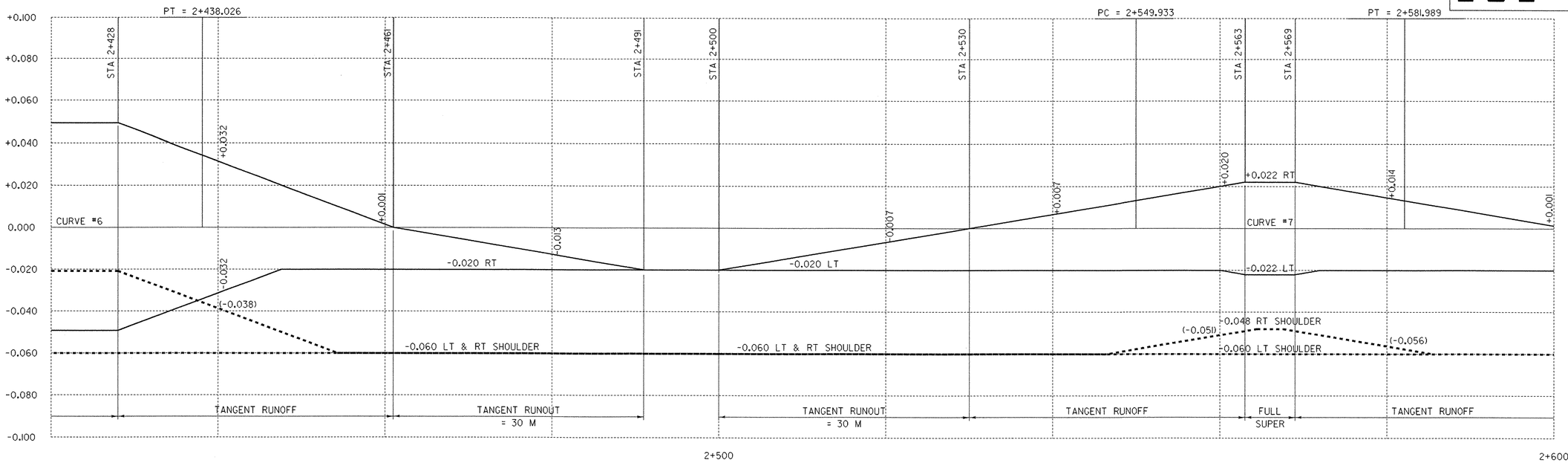

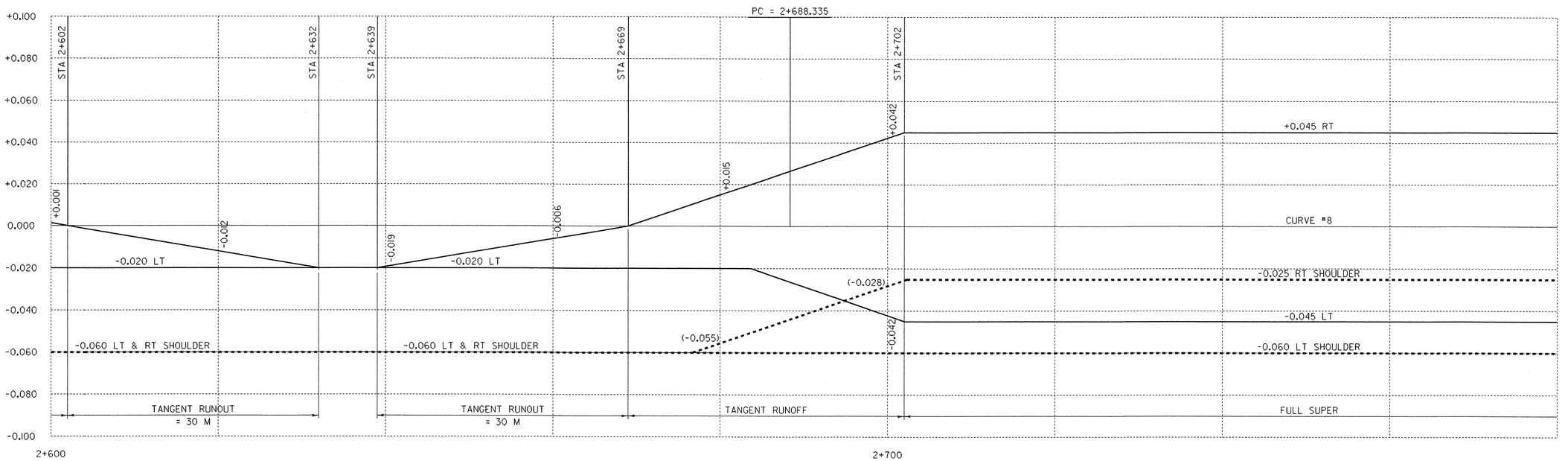

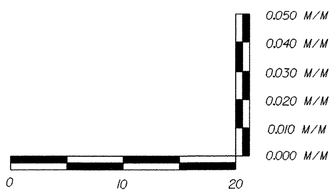

HORIZONTAL SCALE = 1:250
VERTICAL SCALE = 1:100

PROJECT NAME: HIGHGATE - FRANKLIN
PROJECT NUMBER: STP RS 0301(1) SA

FILE NAME: ...85c060/design/dc060xsl.dgn
PROJECT LEADER: DELLASANTA
DESIGNED BY: SQUAD B
IPARM FILE NAME: dc060b05.i

PLOT DATE: 09-MAY-2005
DRAWN BY: SQUAD B
CHECKED BY: SQUAD B
SHEET 252 OF 450

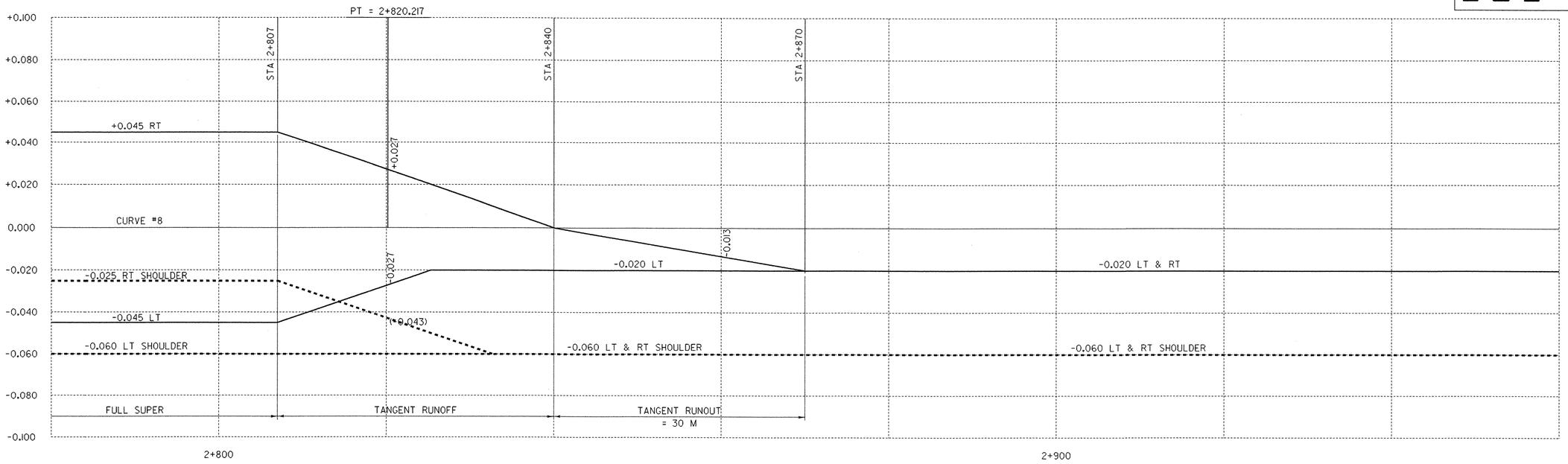

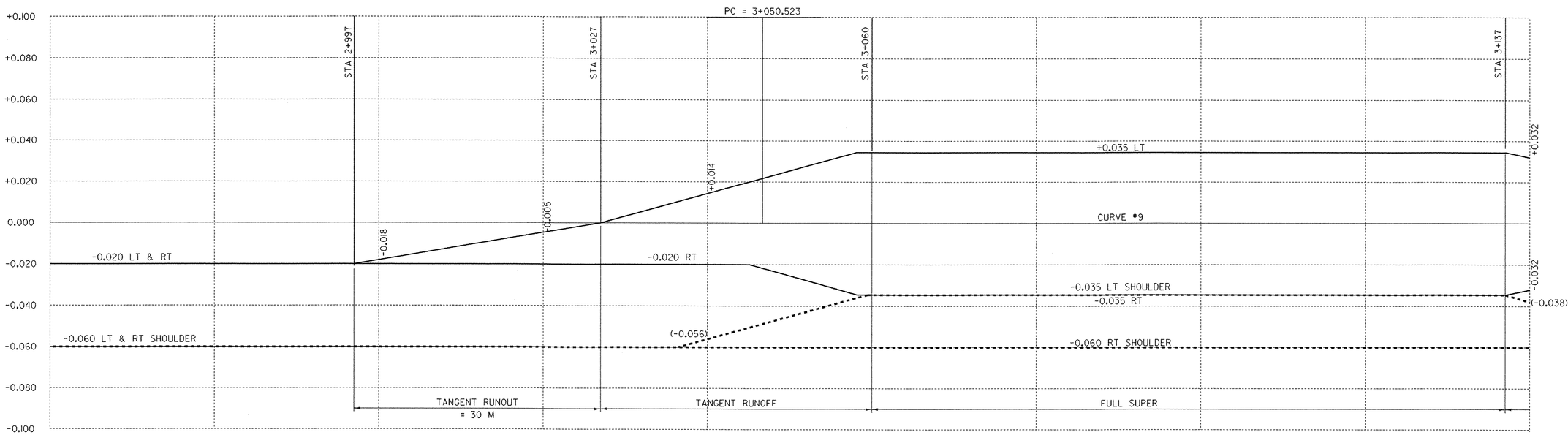

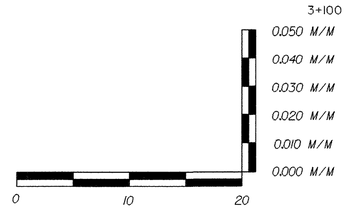

HORIZONTAL SCALE = 1:250
VERTICAL SCALE = 1:100

PROJECT NAME: HIGHGATE - FRANKLIN
PROJECT NUMBER: STP RS 0301(1) SA

FILE NAME: ...85c060/design/dc060xsl.dgn
PROJECT LEADER: DELLASANTA
DESIGNED BY: SQUAD B
IPARM FILE NAME: dc060b06.i

PLOT DATE: 09-MAY-2005
DRAWN BY: SQUAD B
CHECKED BY: SQUAD B
SHEET 253 OF 450

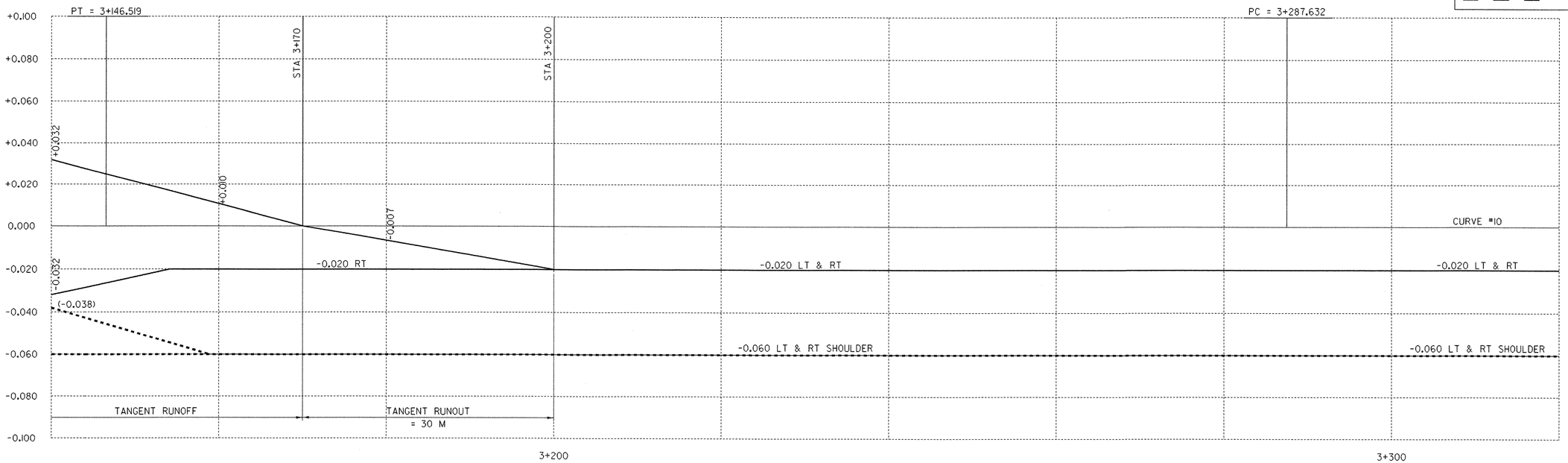

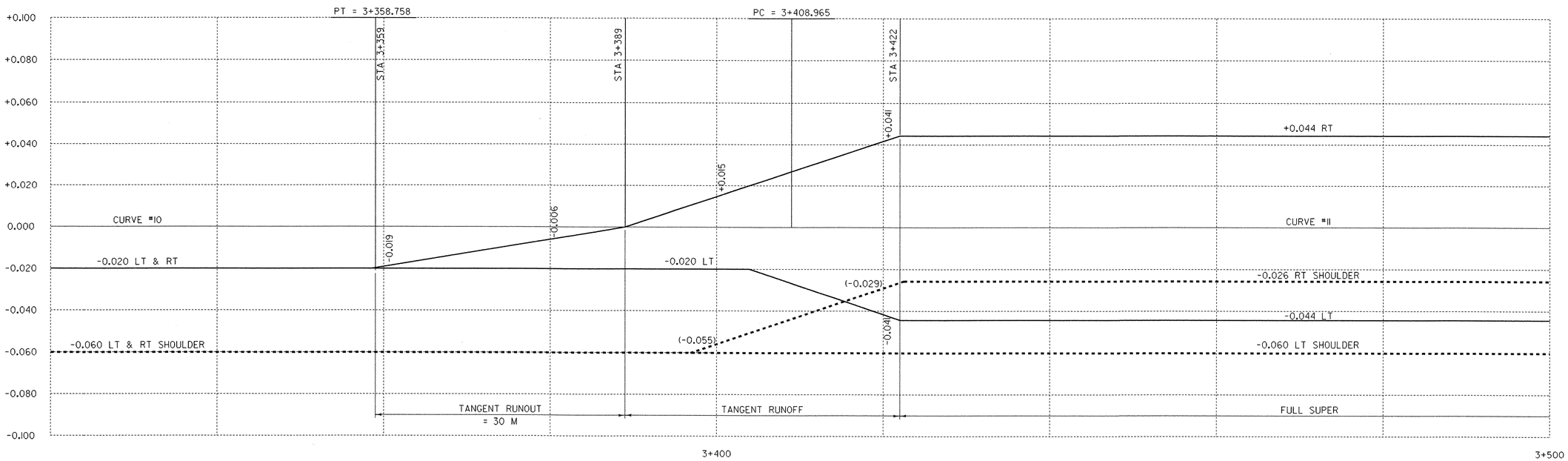

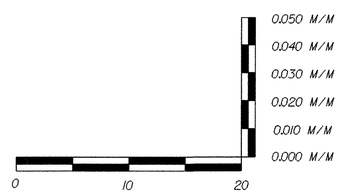

HORIZONTAL SCALE = 1:250

VERTICAL SCALE = 1:100

PROJECT NAME: HIGHGATE - FRANKLIN

PROJECT NUMBER: STP RS 0301(1) SA

FILE NAME: ...85c060/design/dc060xsl.dgn
PROJECT LEADER: DELLASANTA
DESIGNED BY: SQUAD B
IPARM FILE NAME: dc060b07.i

PLOT DATE: 09-MAY-2005
DRAWN BY: SQUAD B
CHECKED BY: SQUAD B
SHEET 254 OF 450

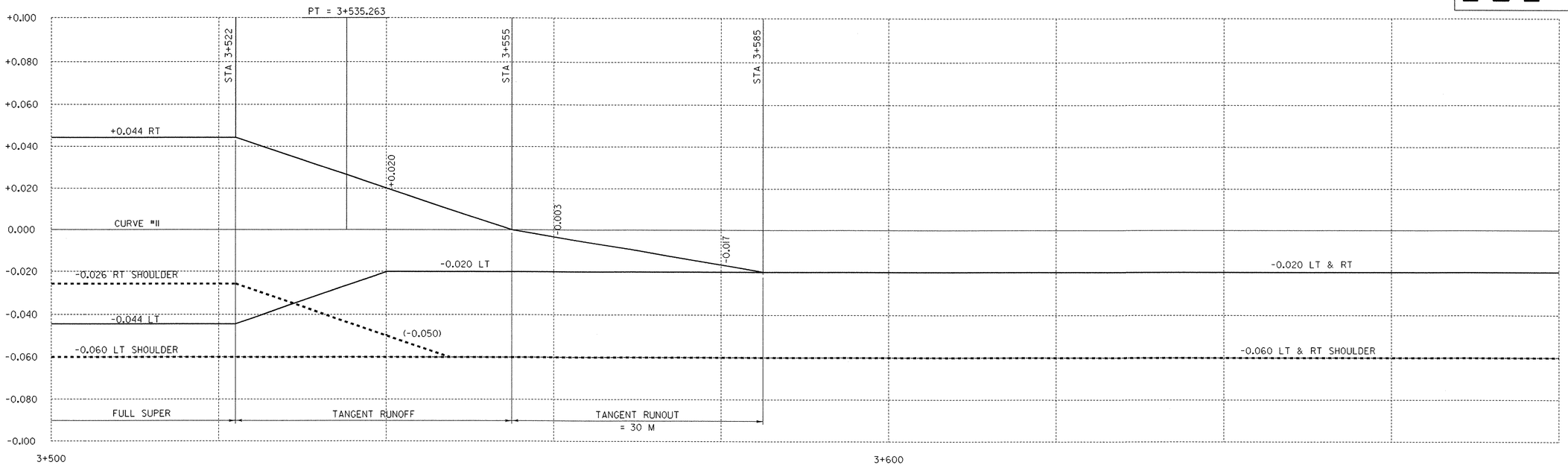

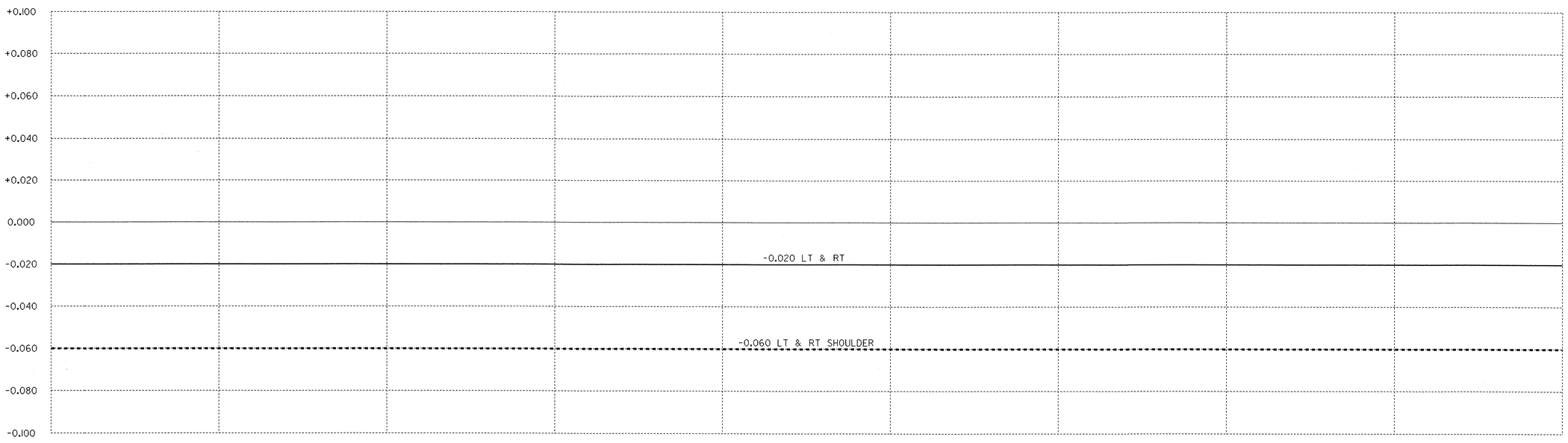

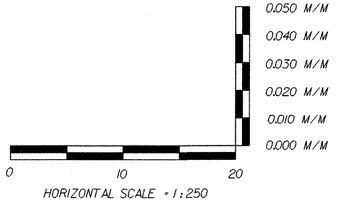

HORIZONTAL SCALE = 1:250
VERTICAL SCALE = 1:100

PROJECT NAME: HIGHGATE - FRANKLIN
PROJECT NUMBER: STP RS 0301(1) SA

FILE NAME: ...85c060/design/dc060xsl.dgn
PROJECT LEADER: DELLASANTA
DESIGNED BY: SQUAD B
IPARM FILE NAME: dc060b08.i

PLOT DATE: 09-MAY-2005
DRAWN BY: SQUAD B
CHECKED BY: SQUAD B
SHEET 255 OF 450

Metric

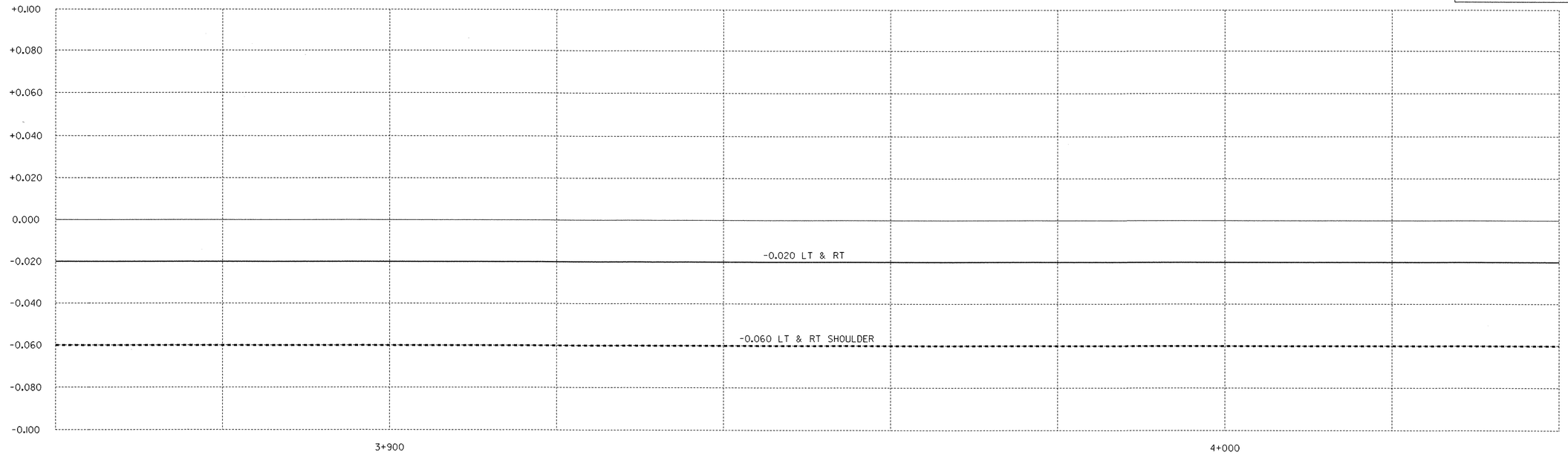

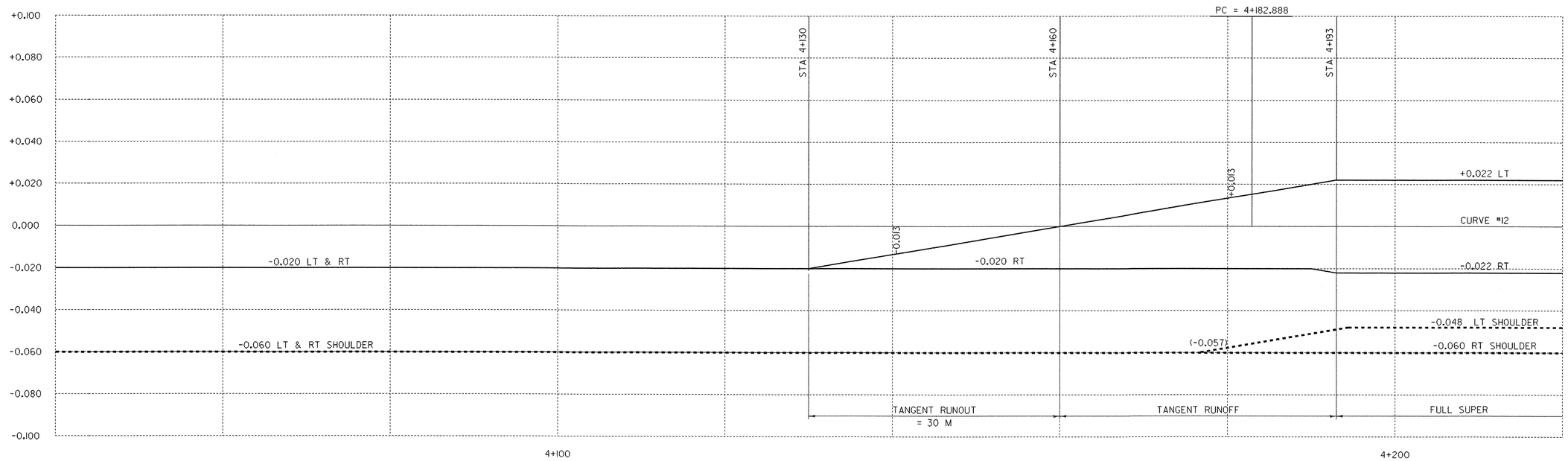

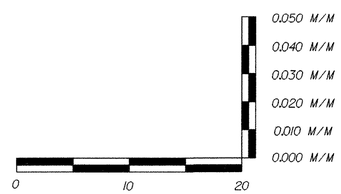

HORIZONTAL SCALE = 1:250
VERTICAL SCALE = 1:100

PROJECT NAME: HIGHGATE - FRANKLIN
PROJECT NUMBER: STP RS 0301(1) SA

FILE NAME: ...85c060/design/dc060xsl.dgn
PROJECT LEADER: DELLASANTA
DESIGNED BY: SQUAD B
IPARM FILE NAME: dc060b09.I

PLOT DATE: 09-MAY-2005
DRAWN BY: SQUAD B
CHECKED BY: SQUAD B
SHEET 256 OF 450

Metric

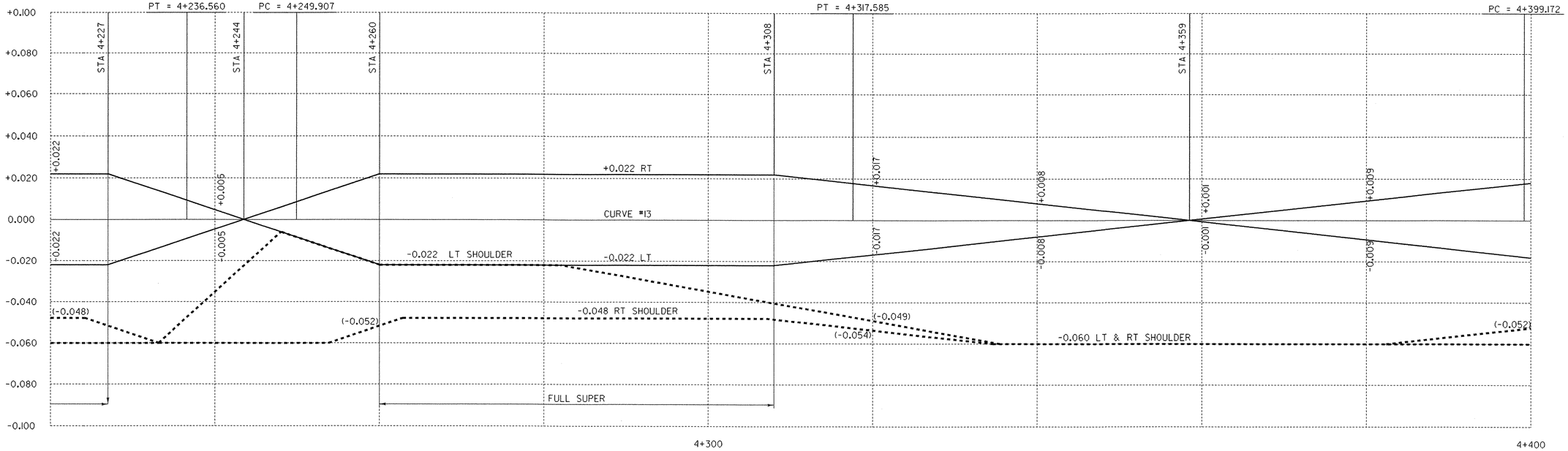

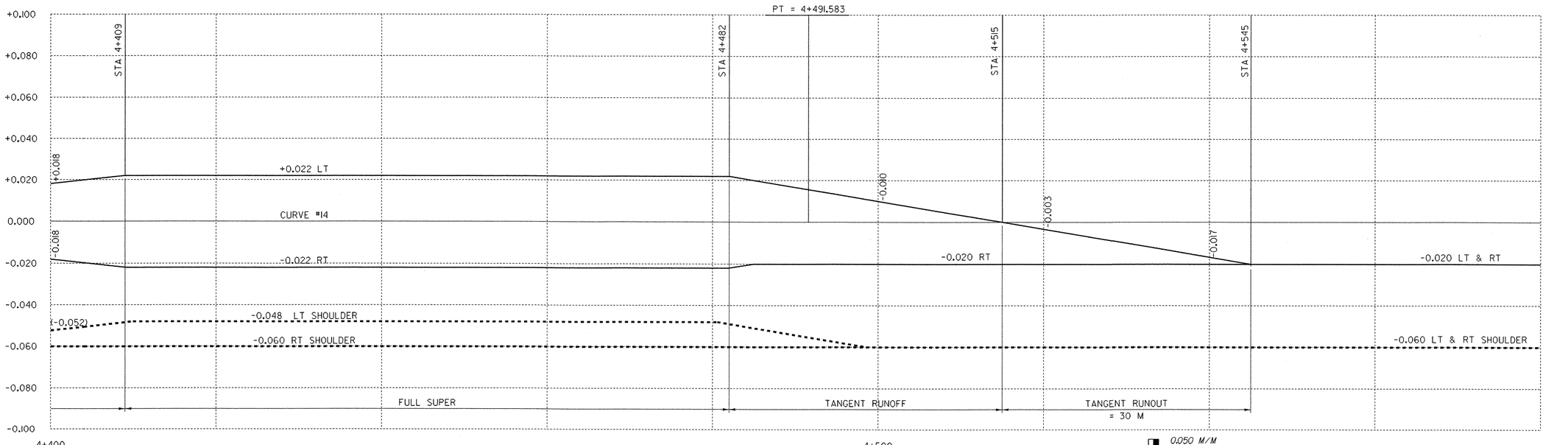

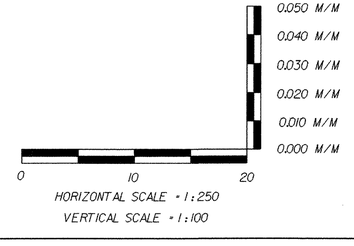

PROJECT NAME: HIGHGATE - FRANKLIN
PROJECT NUMBER: STP RS 0301(1) SA

FILE NAME: ...85c060/design/dc060xsl.dgn
PROJECT LEADER: DELLASANTA
DESIGNED BY: SQUAD B
IPARM FILE NAME: dc060b10.i

PLOT DATE: 09-MAY-2005
DRAWN BY: SQUAD B
CHECKED BY: SQUAD B
SHEET 257 OF 450

Metric

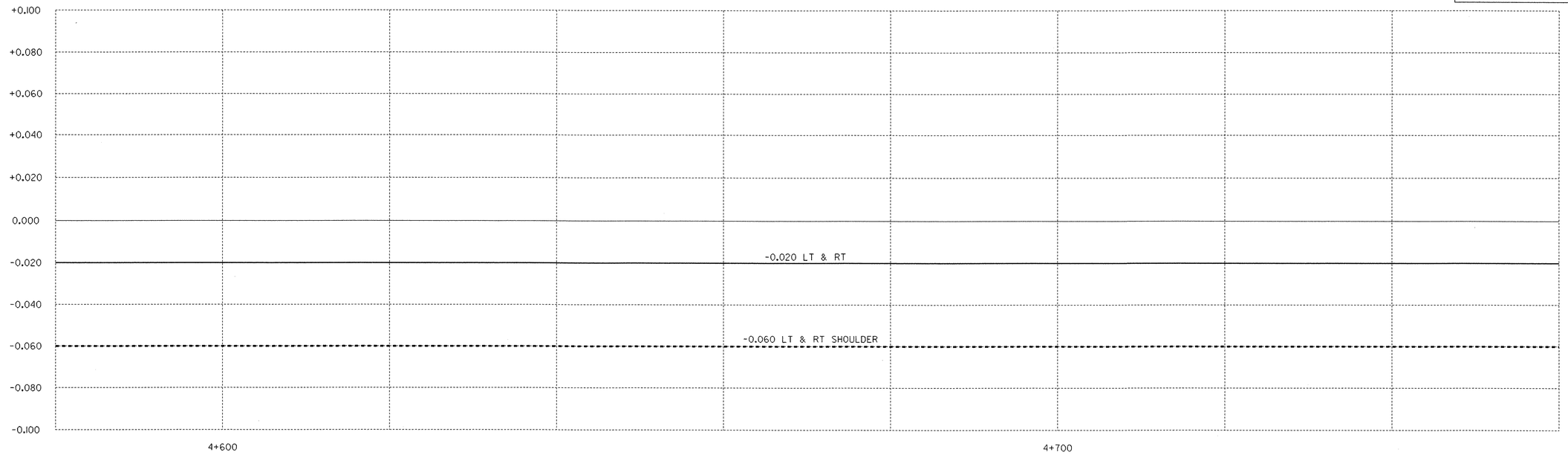

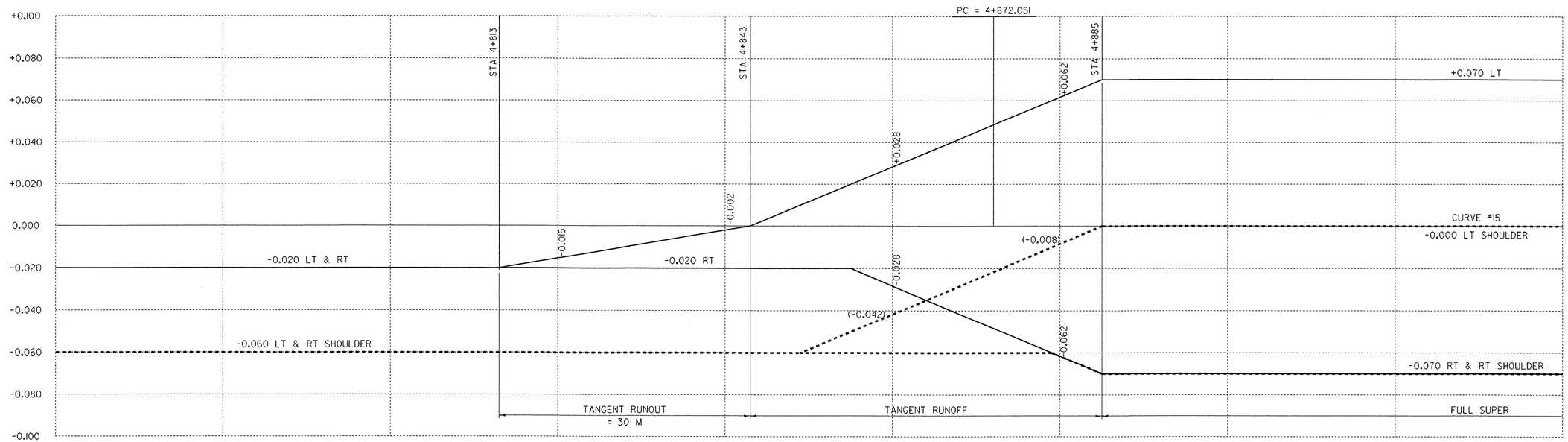

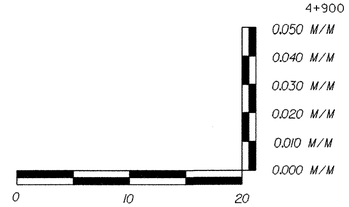

HORIZONTAL SCALE = 1:250
VERTICAL SCALE = 1:100

PROJECT NAME: HIGHGATE - FRANKLIN
PROJECT NUMBER: STP RS 0301(1) SA

FILE NAME: ...85c060/design/dc060xsl.dgn
PROJECT LEADER: DELLASANTA
DESIGNED BY: SQUAD B
IPARM FILE NAME: dc060bll.i

PLOT DATE: 09-MAY-2005
DRAWN BY: SQUAD B
CHECKED BY: SQUAD B
SHEET 258 OF 450

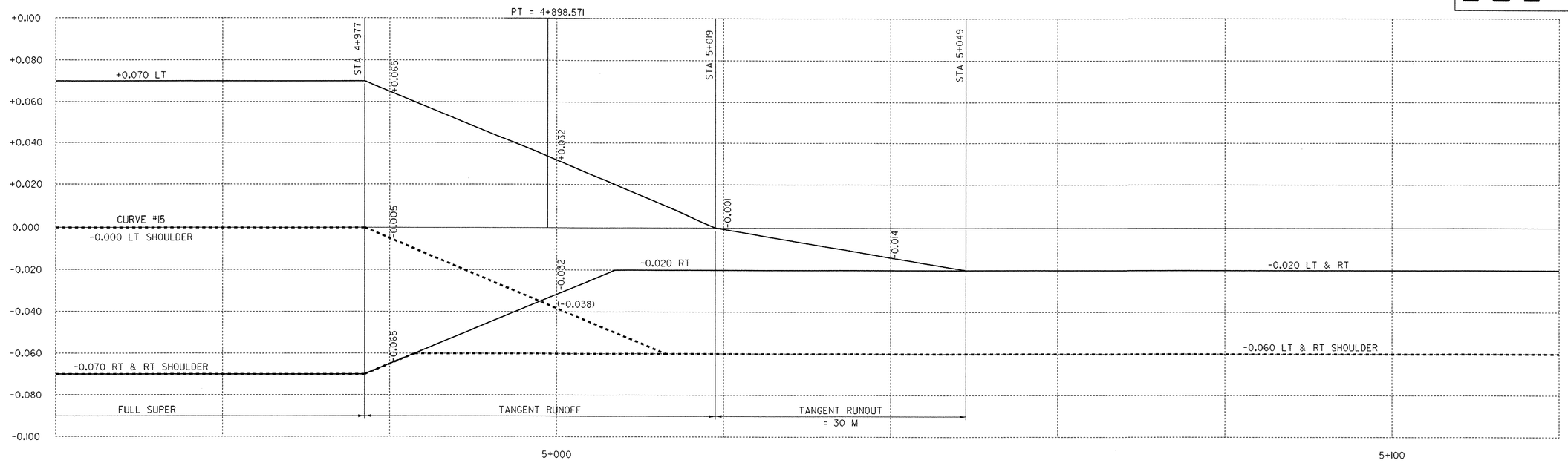

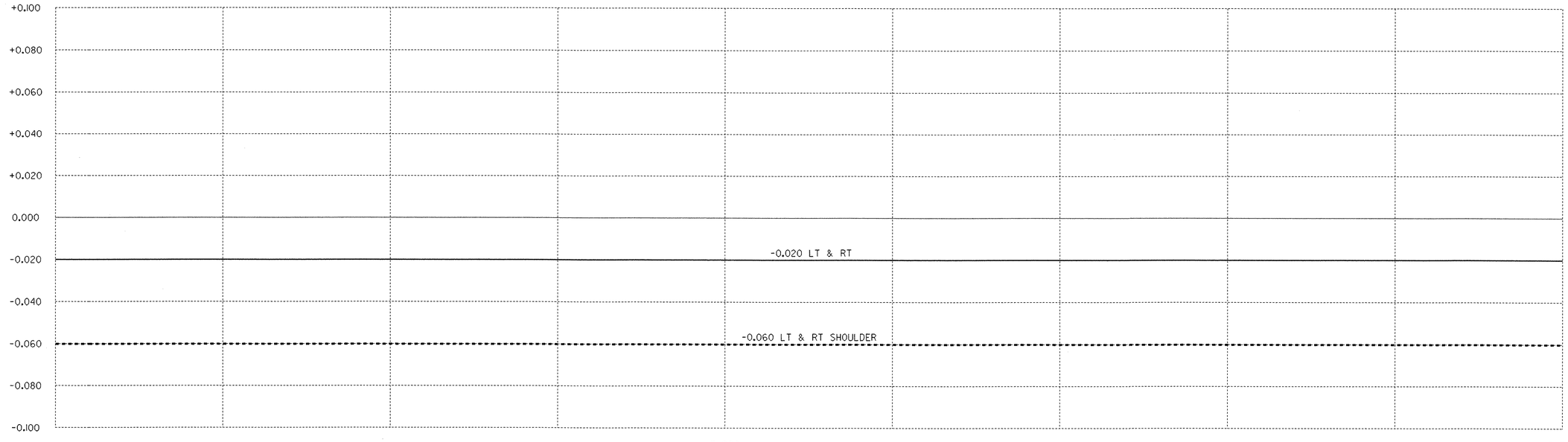

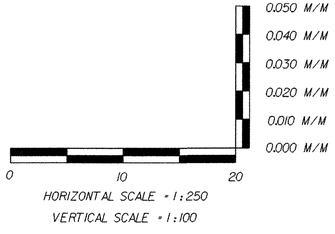

PROJECT NAME: HIGHGATE - FRANKLIN
PROJECT NUMBER: STP RS 0301(1) SA

FILE NAME: ...85c060/design/dc060xsl.dgn
PROJECT LEADER: DELLASANTA
DESIGNED BY: SQUAD B
IPARM FILE NAME: dc060b12.i

PLOT DATE: 09-MAY-2005
DRAWN BY: SQUAD B
CHECKED BY: SQUAD B
SHEET 259 OF 450

Metric

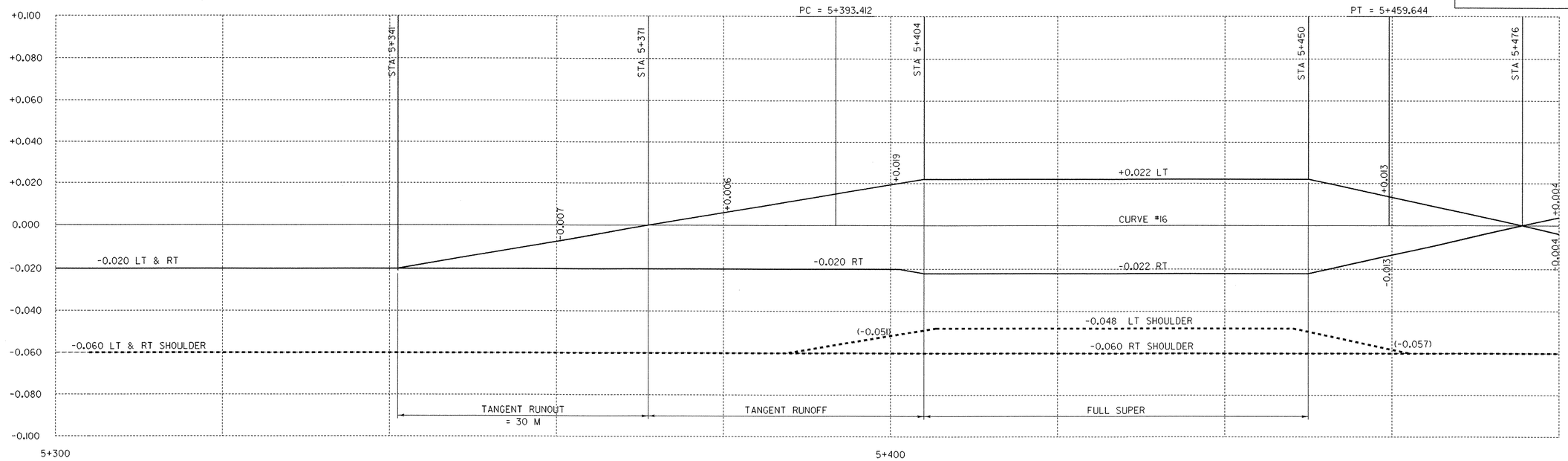

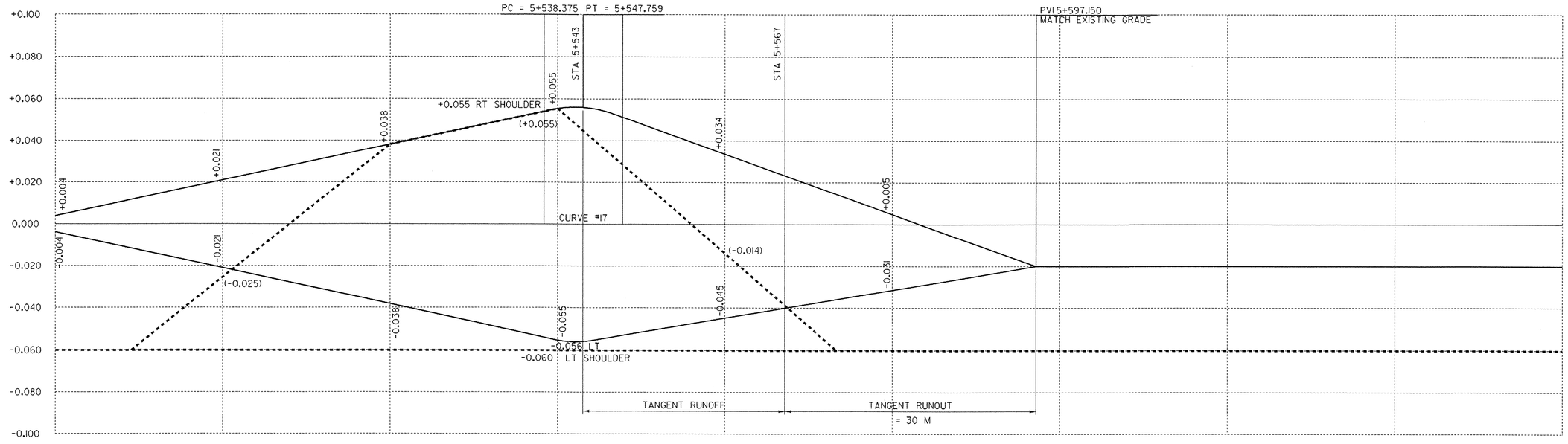

0.050 M/M
0.040 M/M
0.030 M/M
0.020 M/M
0.010 M/M
0.000 M/M

0 10 20

HORIZONTAL SCALE = 1:250
VERTICAL SCALE = 1:100

PROJECT NAME: HIGHGATE - FRANKLIN
PROJECT NUMBER: STP RS 0301(1) SA

FILE NAME: ...85c060/design/dc060xsl.dgn
PROJECT LEADER: DELLASANTA
DESIGNED BY: SQUAD B
IPARM FILE NAME: dc060bl3.i

PLOT DATE: 09-MAY-2005
DRAWN BY: SQUAD B
CHECKED BY: SQUAD B
SHEET 260 OF 450

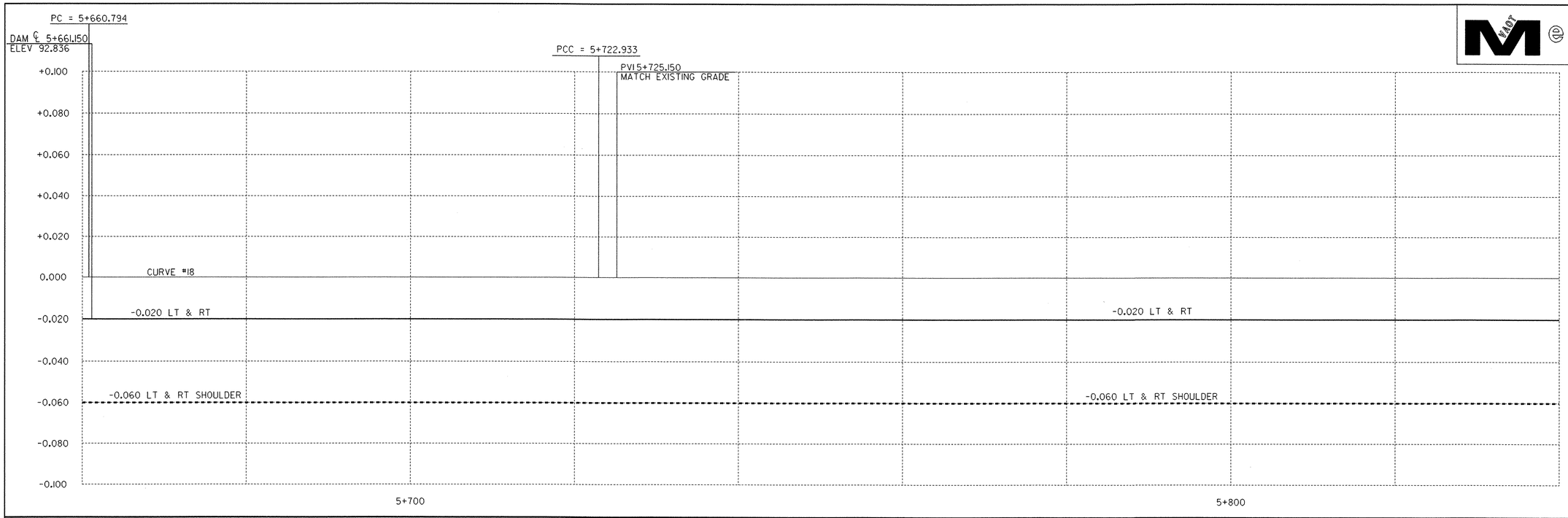

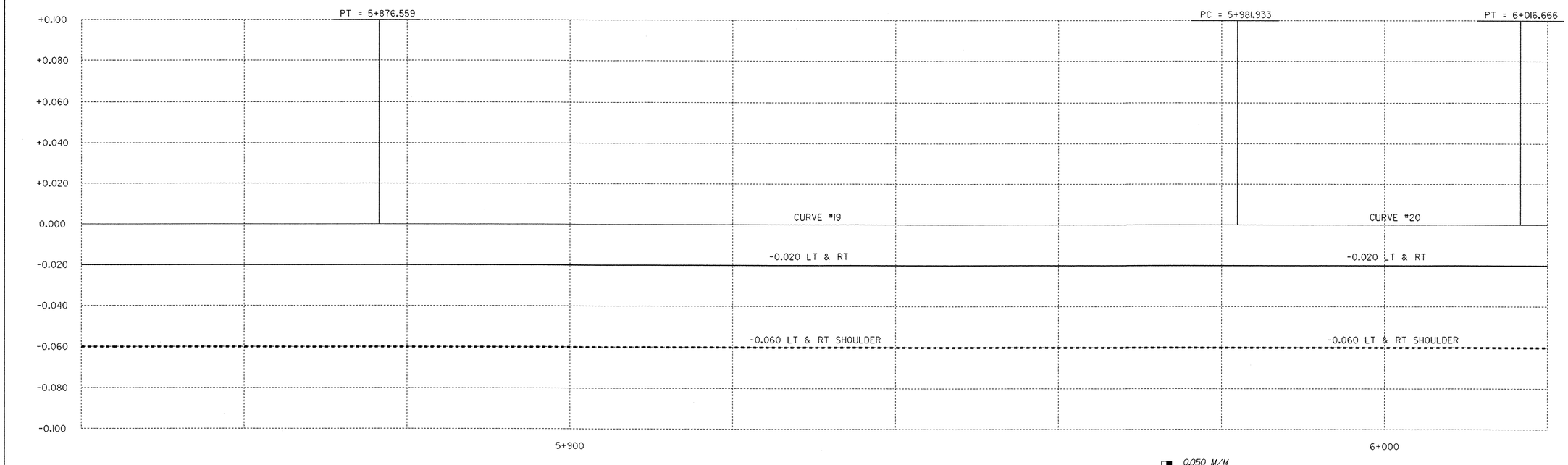

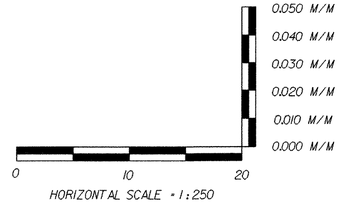

PROJECT NAME:	HIGHGATE - FRANKLIN
PROJECT NUMBER:	STP RS 0301(1) SA
FILE NAME: ...85c060/design/dc060xsl.dgn	PLOT DATE: 09-MAY-2005
PROJECT LEADER: DELLASANTA	DRAWN BY: SQUAD B
DESIGNED BY: SQUAD B	CHECKED BY: SQUAD B
IPARM FILE NAME: dc060bl4.i	SHEET 261 OF 450

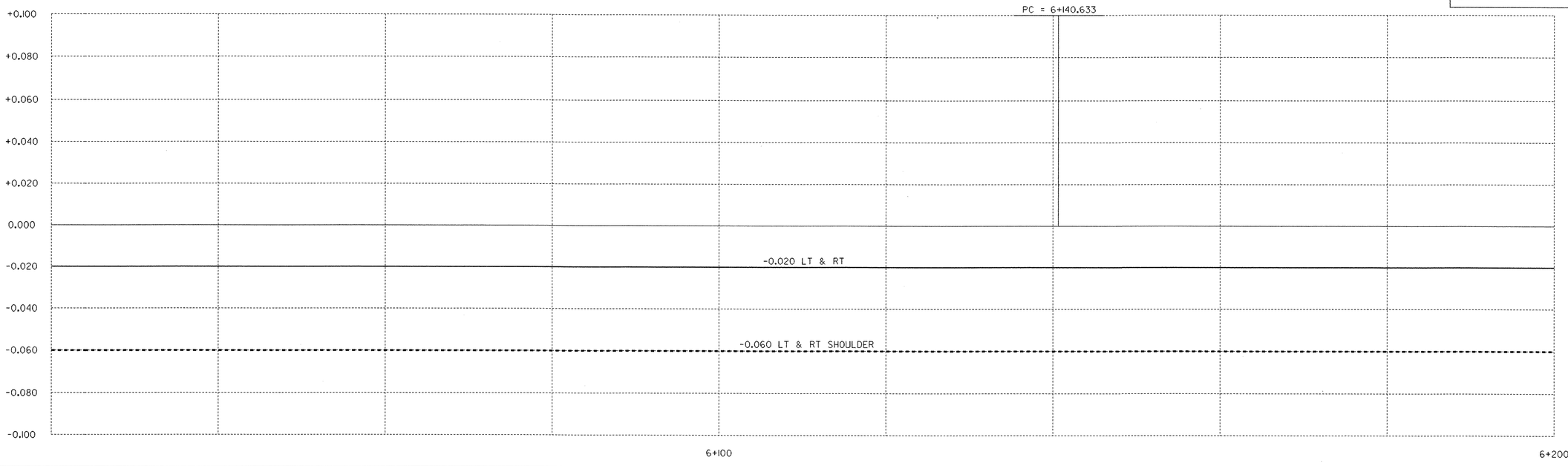

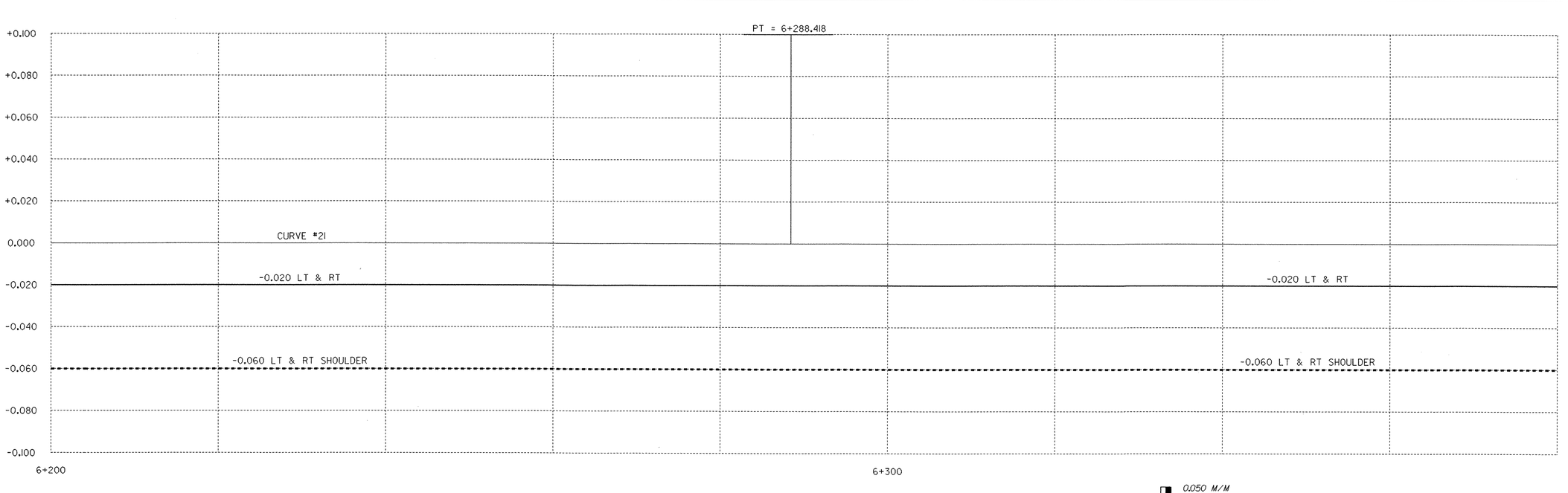

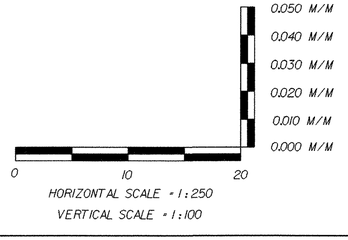

PROJECT NAME: HIGHGATE - FRANKLIN
PROJECT NUMBER: STP RS 0301(1) SA

FILE NAME: ...85c060/design/dc060xsl.dgn
PROJECT LEADER: DELLASANTA
DESIGNED BY: SQUAD B
IPARM FILE NAME: dc060bl5.i

PLOT DATE: 09-MAY-2005
DRAWN BY: SQUAD B
CHECKED BY: SQUAD B
SHEET 262 OF 450

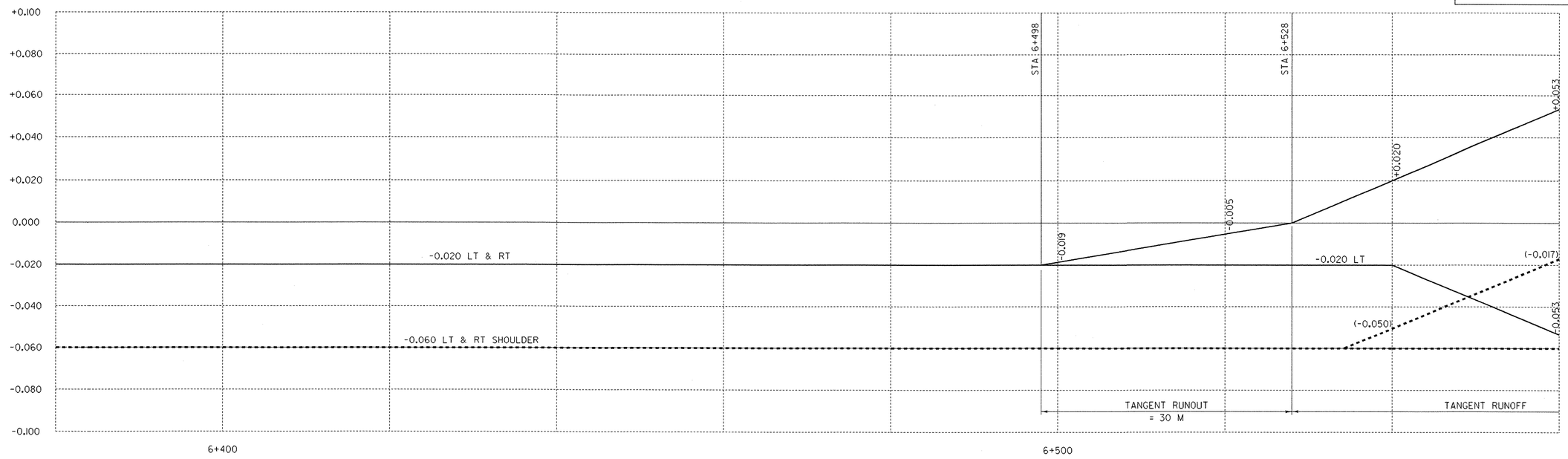

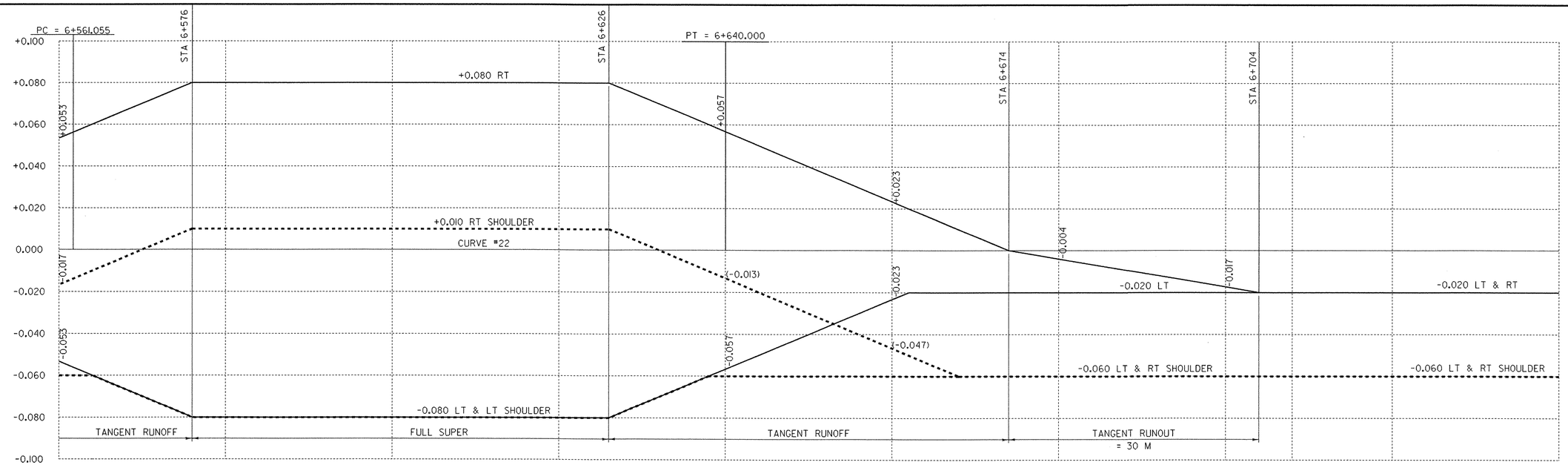

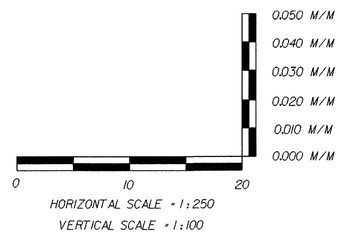

PROJECT NAME:	HIGHGATE - FRANKLIN
PROJECT NUMBER:	STP RS 0301(1) SA

FILE NAME: ...85c060/design/dc060xsl.dgn		PLOT DATE:	09-MAY-2005
PROJECT LEADER:	DELLASANTA	DRAWN BY:	SQUAD B
DESIGNED BY:	SQUAD B	CHECKED BY:	SQUAD B
IPARM FILE NAME:	dc060bl6.i	SHEET	263 OF 450

Metric

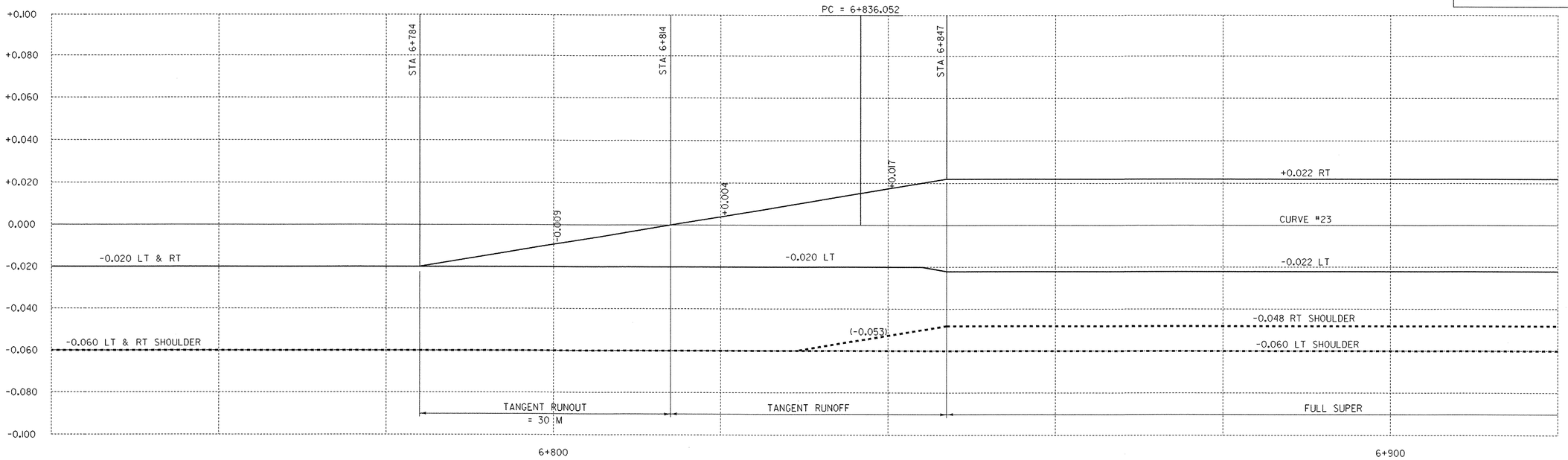

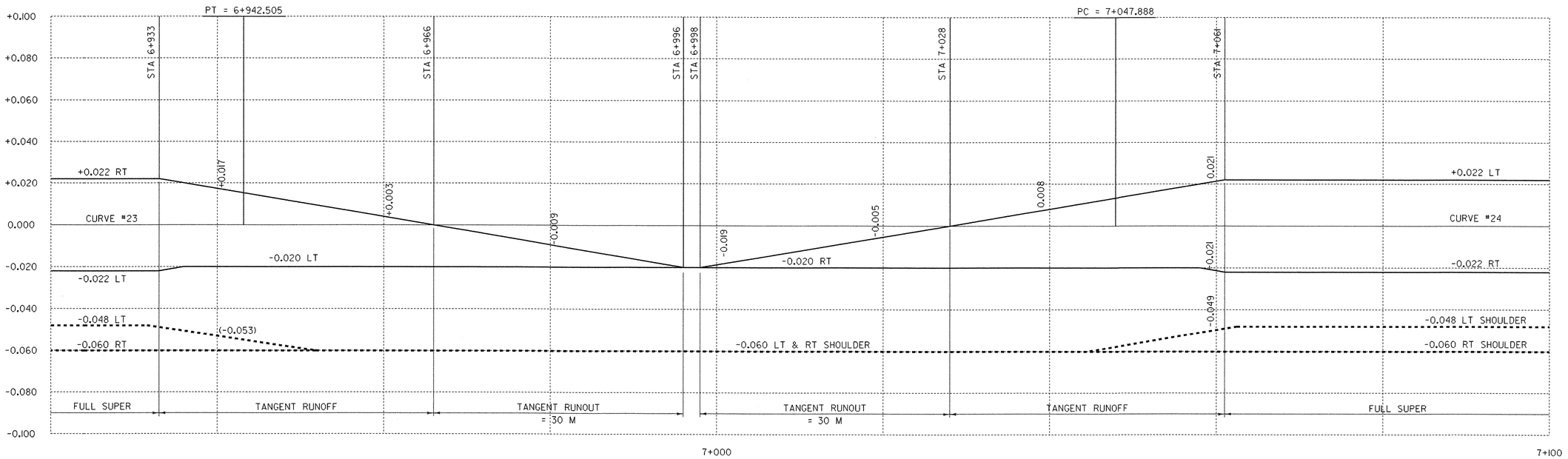

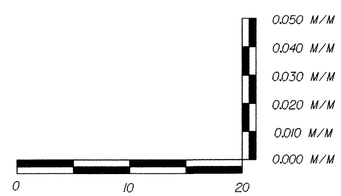

HORIZONTAL SCALE = 1:250
VERTICAL SCALE = 1:100

PROJECT NAME: HIGHGATE - FRANKLIN
PROJECT NUMBER: STP RS 0301(1) SA

FILE NAME: ...85c060/design/dc060xsl.dgn
PROJECT LEADER: DELLASANTA
DESIGNED BY: SQUAD B
IPARM FILE NAME: dc060bl7.i

PLOT DATE: 09-MAY-2005
DRAWN BY: SQUAD B
CHECKED BY: SQUAD B
SHEET 264 OF 450

Metric

PT Sta 7+199.062 =
POT Sta 7+199.129
EQ = -0.067

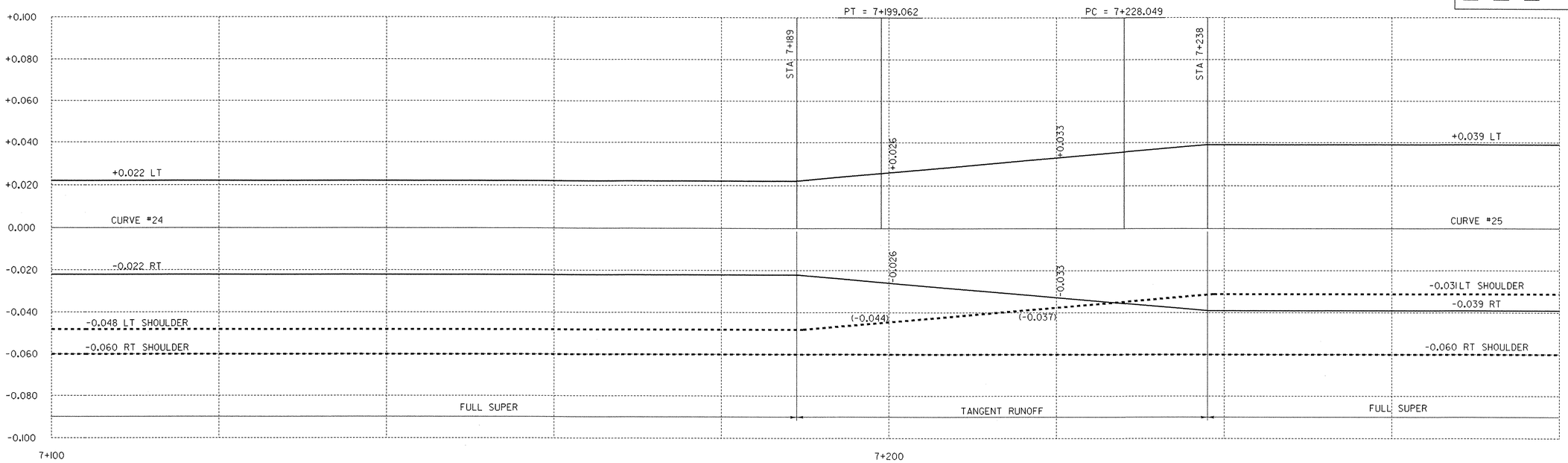

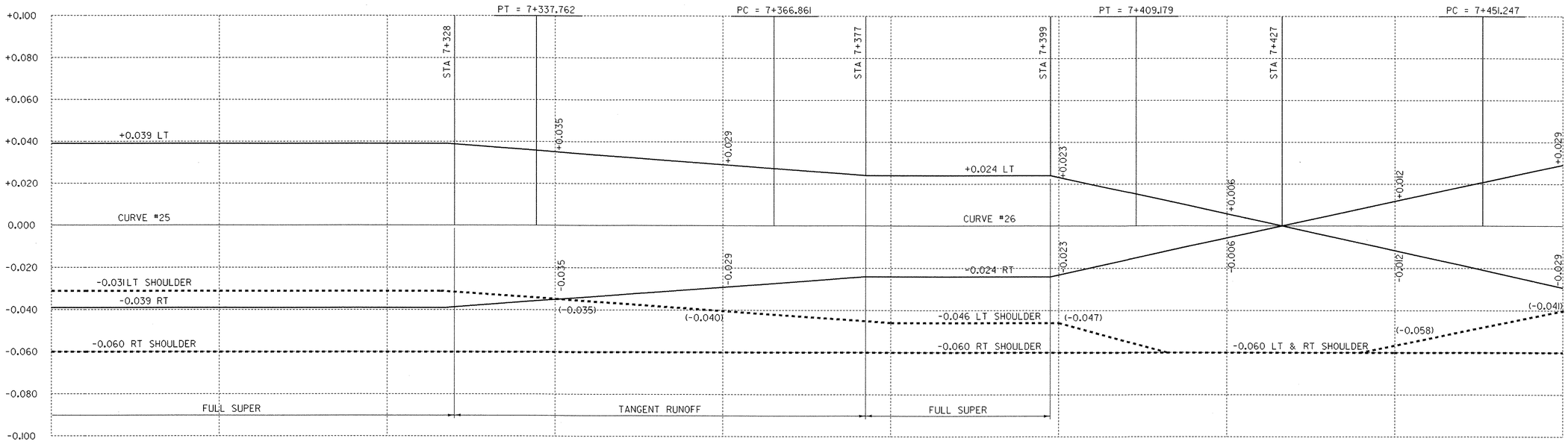

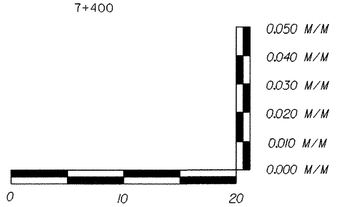

HORIZONTAL SCALE = 1:250
VERTICAL SCALE = 1:100

PROJECT NAME:	HIGHGATE - FRANKLIN
PROJECT NUMBER:	STP RS 0301(1) SA
FILE NAME: ...85c060/design/dc060xsl.dgn	PLOT DATE: 09-MAY-2005
PROJECT LEADER: DELLASANTA	DRAWN BY: SQUAD B
DESIGNED BY: SQUAD B	CHECKED BY: SQUAD B
IPARM FILE NAME: dc060bl8.i	SHEET 265 OF 450

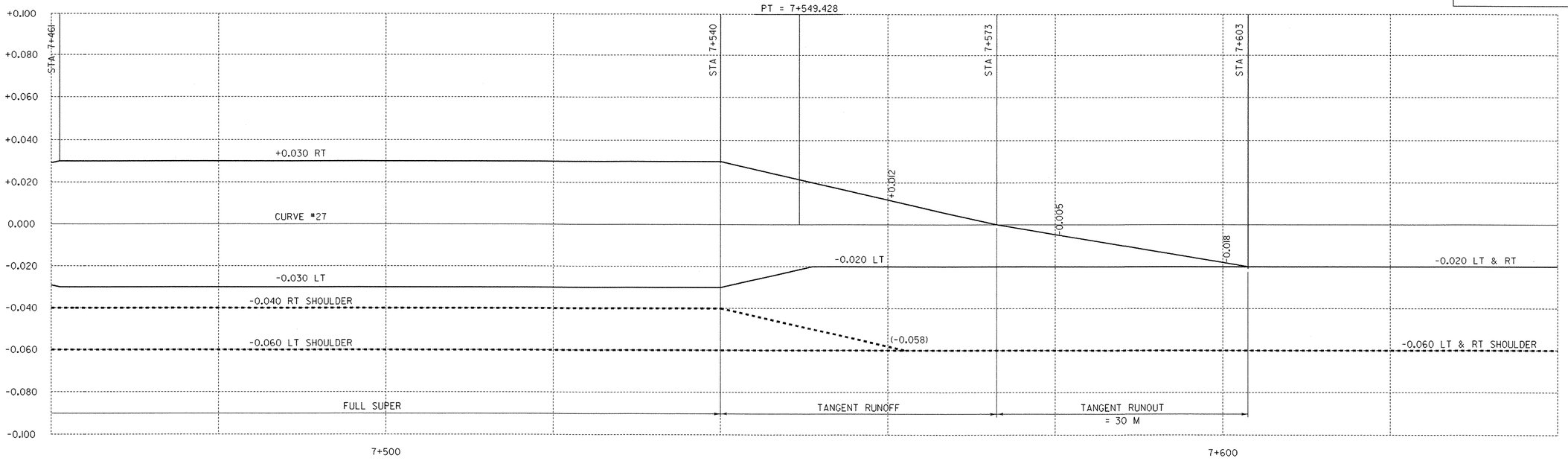

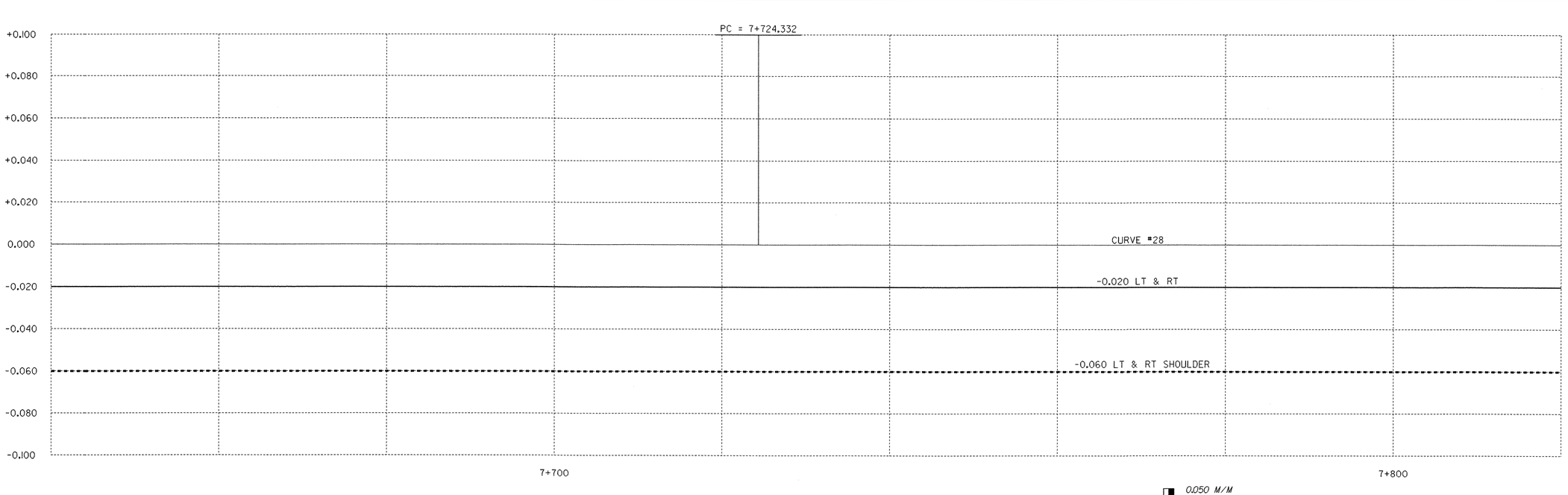

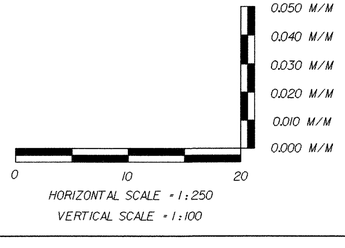

PROJECT NAME:	HIGHGATE - FRANKLIN
PROJECT NUMBER:	STP RS 0301(1) SA
FILE NAME: ...85c060/design/dc060xsl.dgn	PLOT DATE: 09-MAY-2005
PROJECT LEADER: DELLASANTA	DRAWN BY: SQUAD B
DESIGNED BY: SQUAD B	CHECKED BY: SQUAD B
IPARM FILE NAME: dc060bl9.i	SHEET 266 OF 450

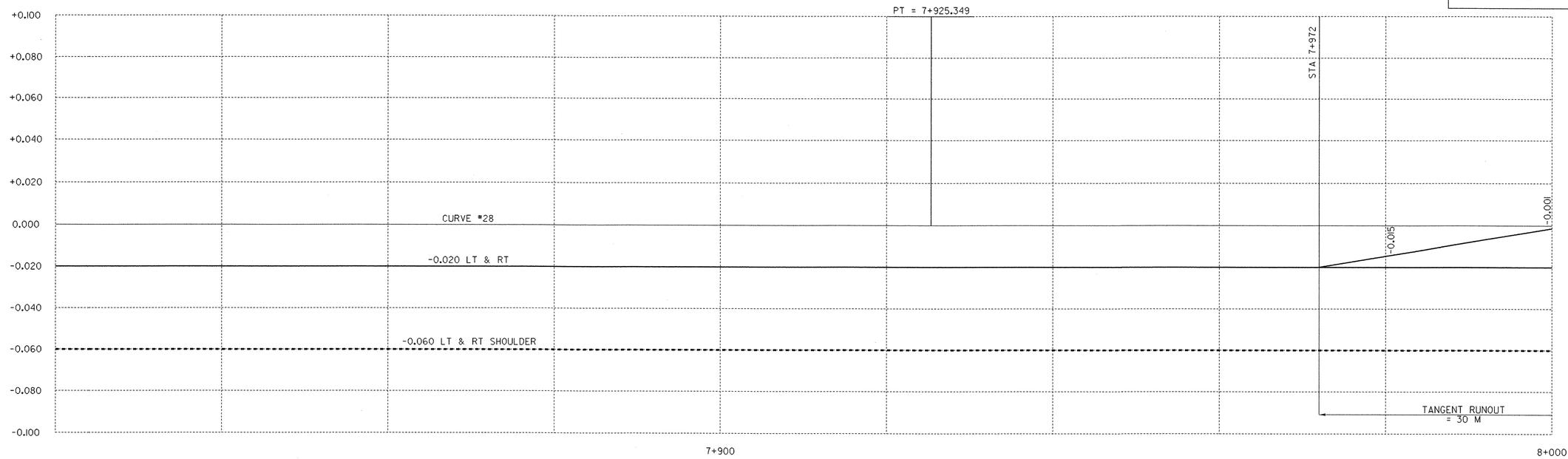

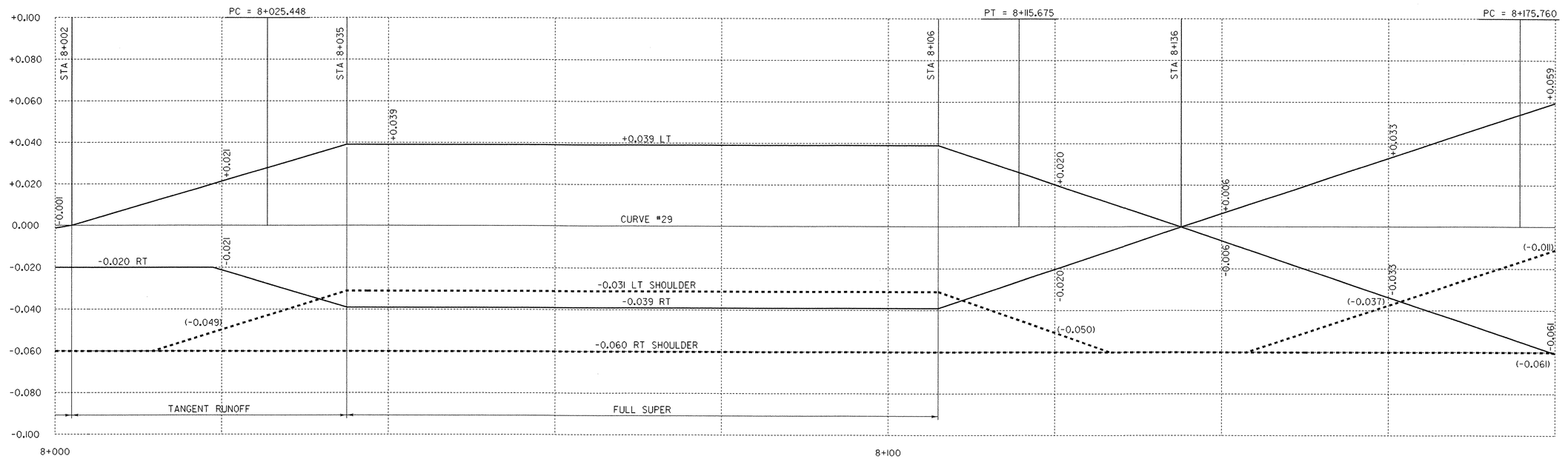

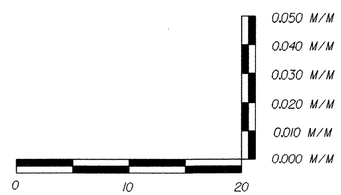

HORIZONTAL SCALE = 1:250
VERTICAL SCALE = 1:100

PROJECT NAME:	HIGHGATE - FRANKLIN
PROJECT NUMBER:	STP RS 0301(1) SA
FILE NAME: ...85c060/design/dc060xsl.dgn	PLOT DATE: 09-MAY-2005
PROJECT LEADER: DELLASANTA	DRAWN BY: SQUAD B
DESIGNED BY: SQUAD B	CHECKED BY: SQUAD B
IPARM FILE NAME: dc060b20.i	SHEET 267 OF 450

Sta POT 8+254.726 =
REV PC Sta 8+254.730
EQ = -0.004

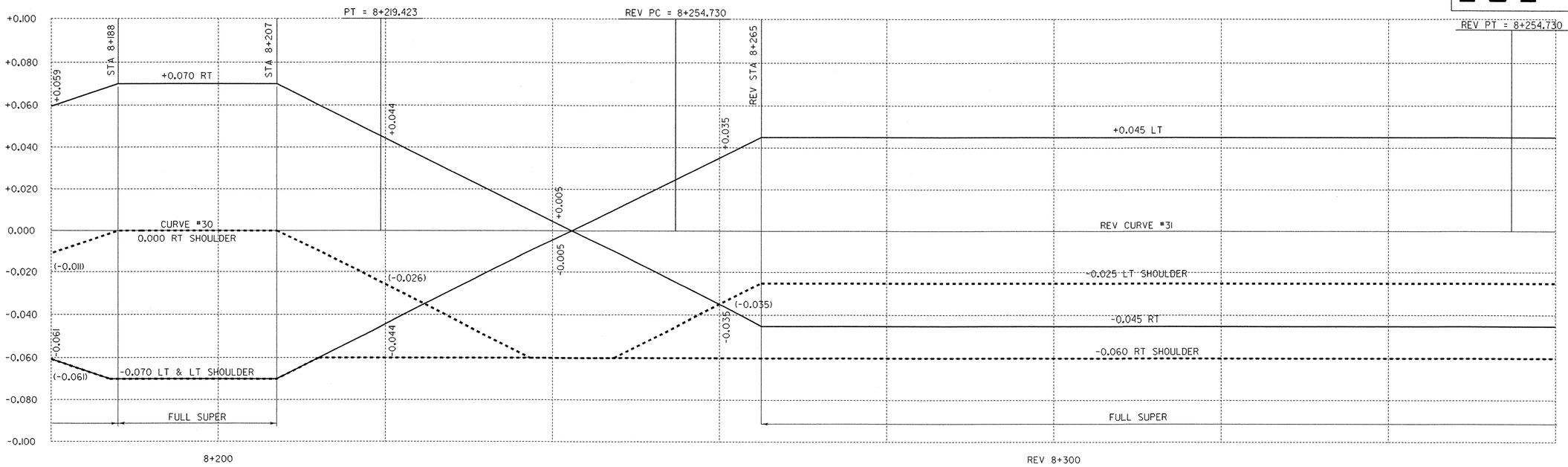

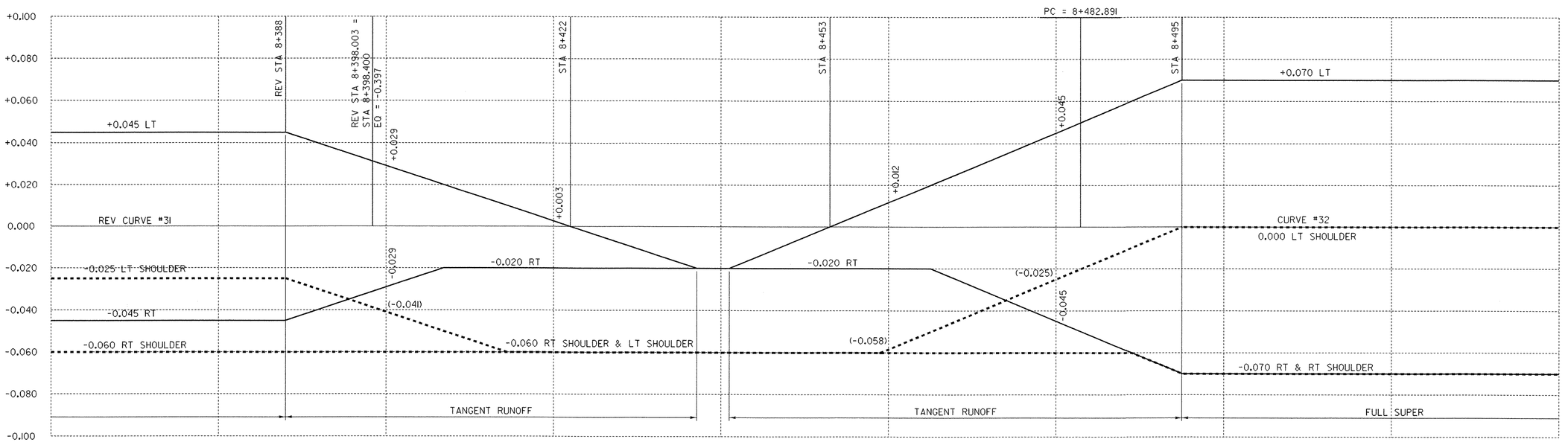

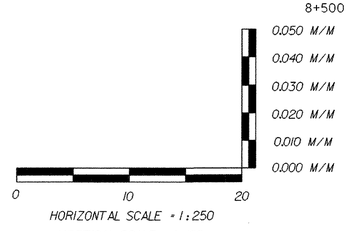

HORIZONTAL SCALE = 1:250
VERTICAL SCALE = 1:100

PROJECT NAME:	HIGHGATE - FRANKLIN
PROJECT NUMBER:	STP RS 0301(1) SA
FILE NAME: ...85c060/design/dc060xsl.dgn	PLOT DATE: 09-MAY-2005
PROJECT LEADER: DELLASANTA	DRAWN BY: SQUAD B
DESIGNED BY: SQUAD B	CHECKED BY: SQUAD B
IPARM FILE NAME: dc060b21.i	SHEET 268 OF 450

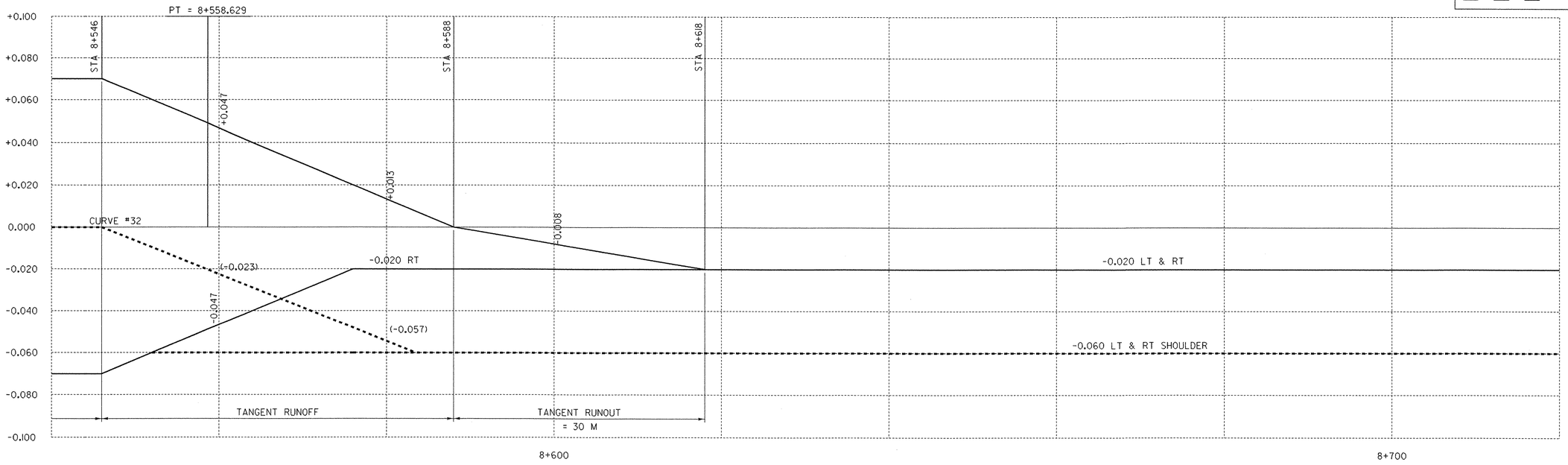

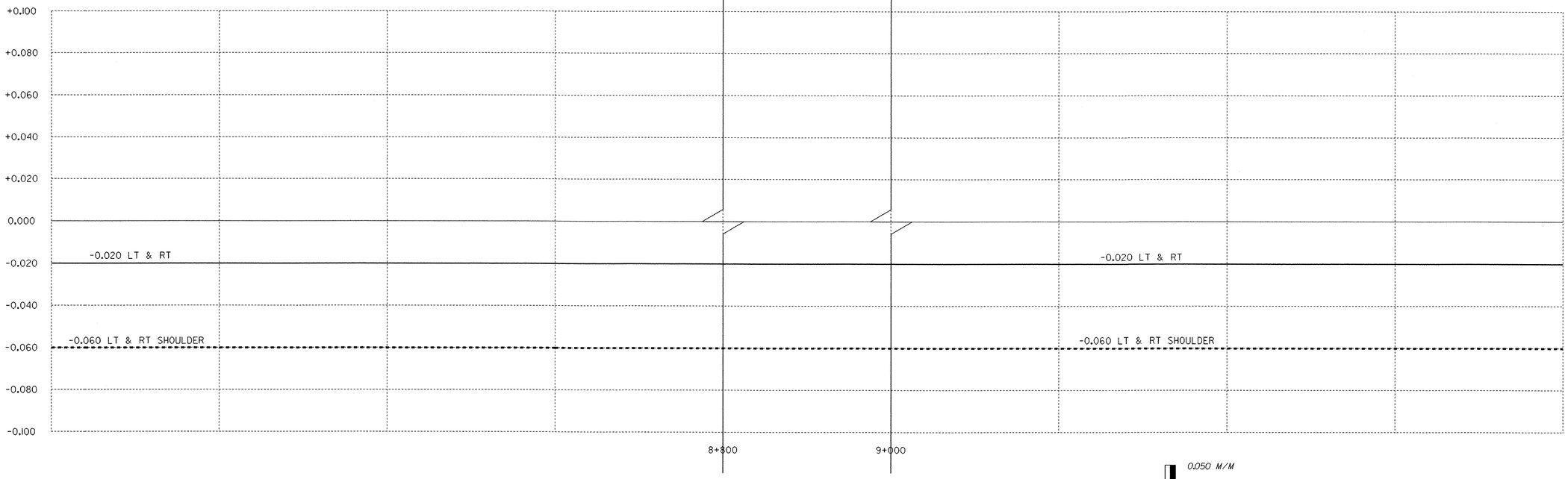

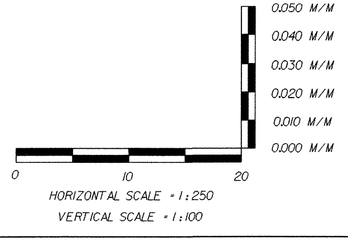

PROJECT NAME: HIGHGATE - FRANKLIN
PROJECT NUMBER: STP RS 0301(1) SA

FILE NAME: ...85c060/design/dc060xsl.dgn
PROJECT LEADER: DELLASANTA
DESIGNED BY: SQUAD B
IPARM FILE NAME: dc060b22.i

PLOT DATE: 09-MAY-2005
DRAWN BY: SQUAD B
CHECKED BY: SQUAD B
SHEET 269 OF 450

MDOT Metric

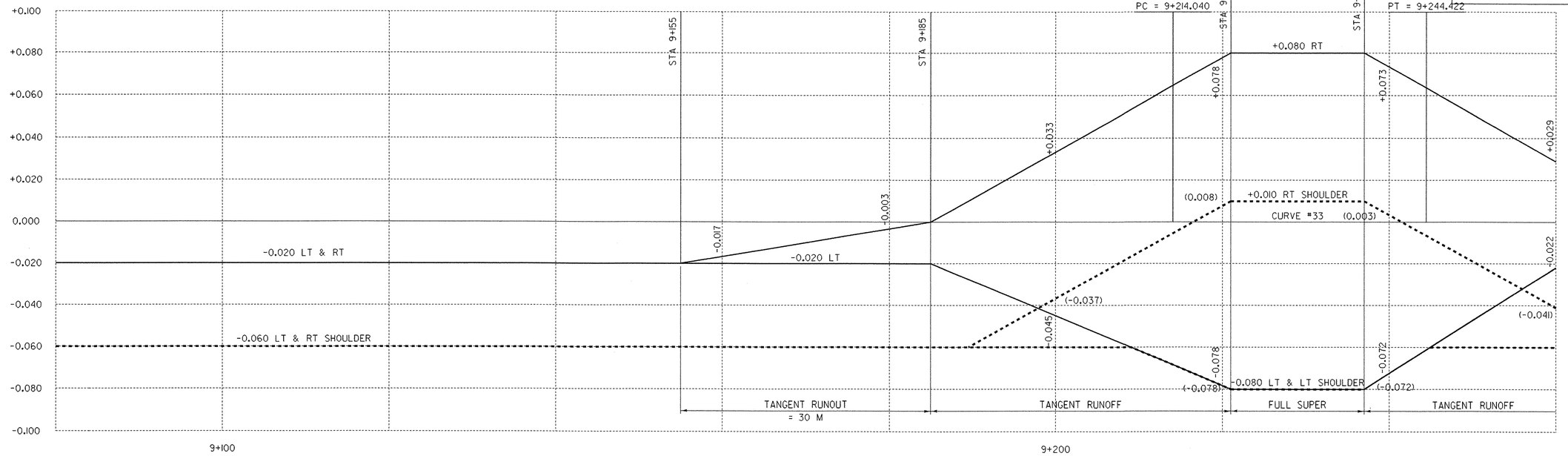

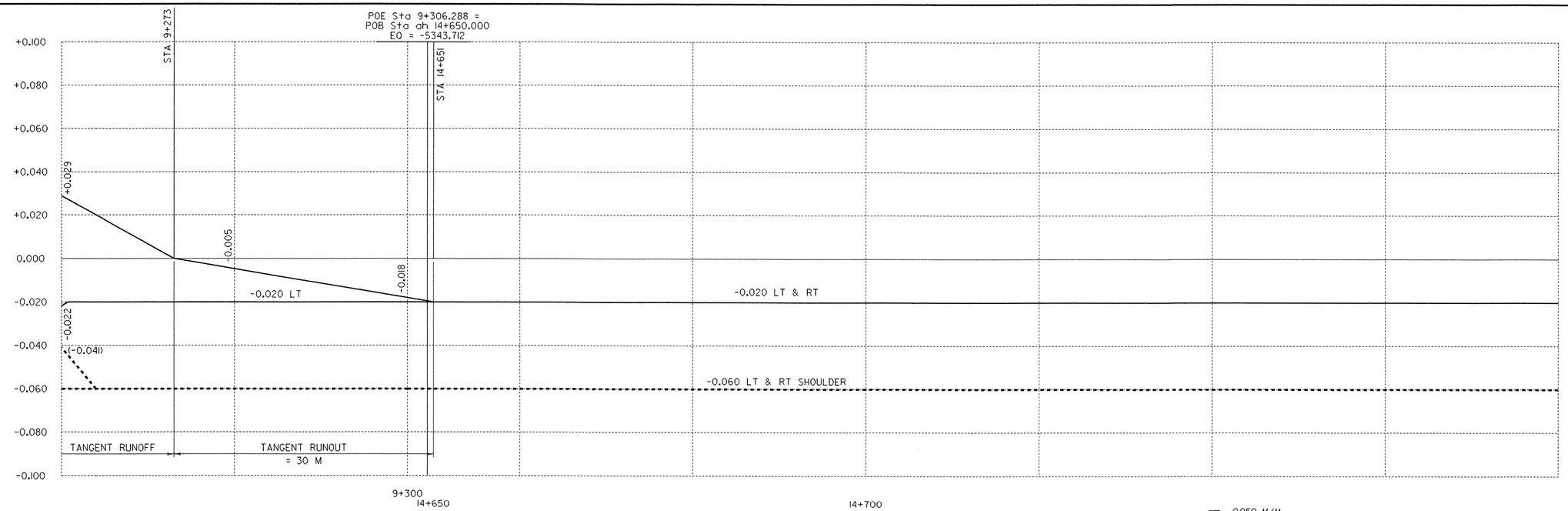

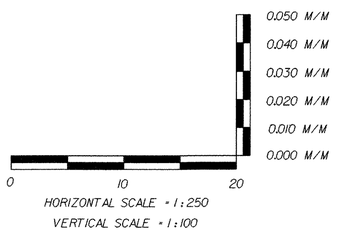

PROJECT NAME:	HIGHGATE - FRANKLIN
PROJECT NUMBER:	STP RS 0301(1) SA
FILE NAME: ...85c060/design/dc060xsl.dgn	PLOT DATE: 09-MAY-2005
PROJECT LEADER: DELLASANTA	DRAWN BY: SQUAD B
DESIGNED BY: SQUAD B	CHECKED BY: SQUAD B
IPARM FILE NAME: dc060b23.i	SHEET 270 OF 450

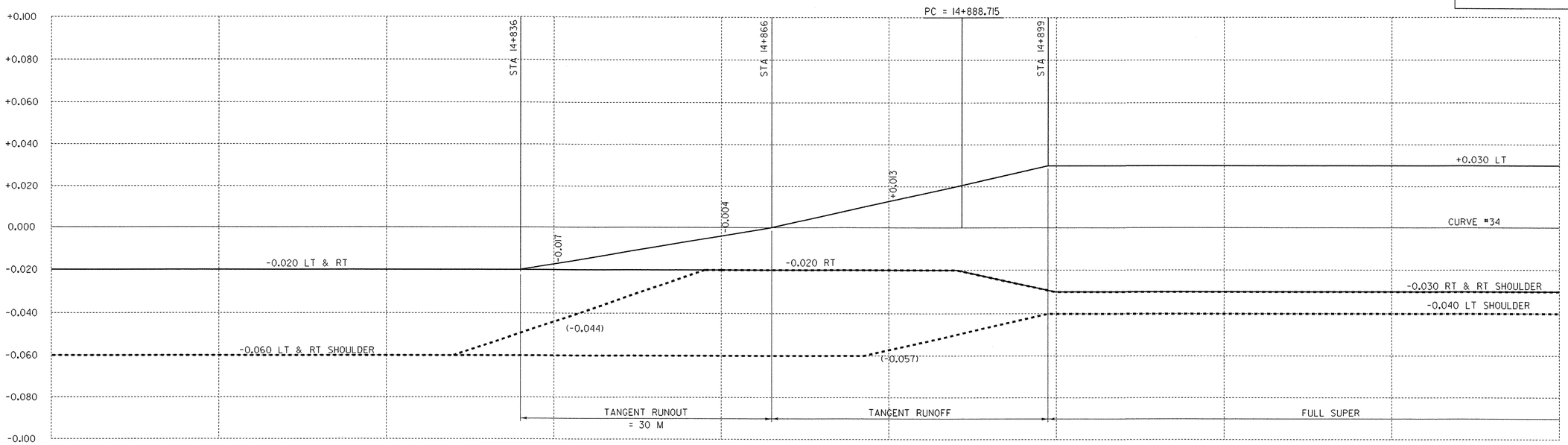

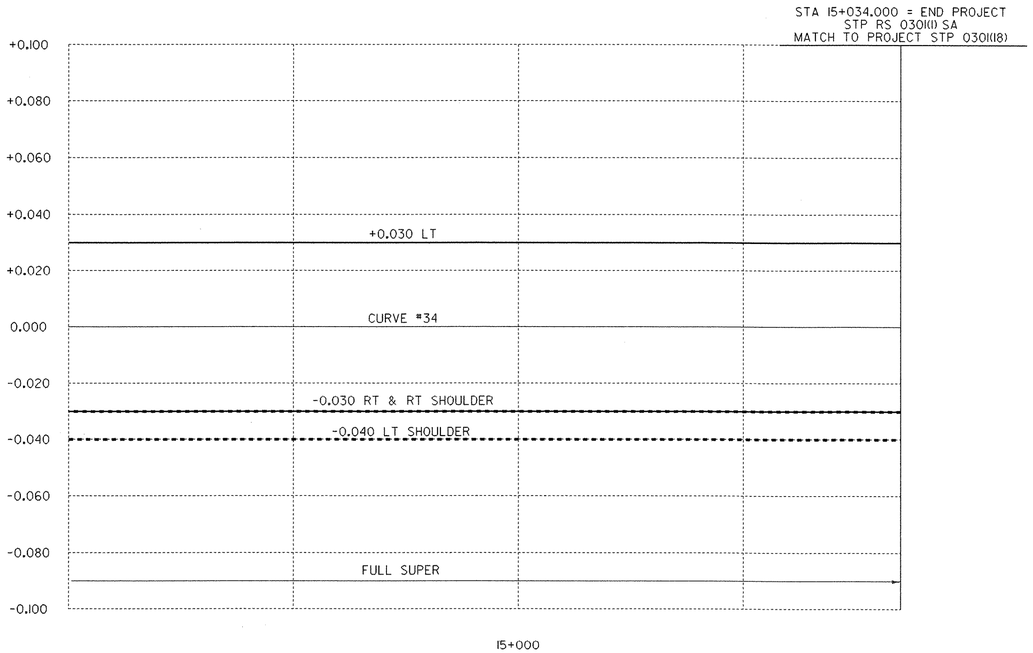

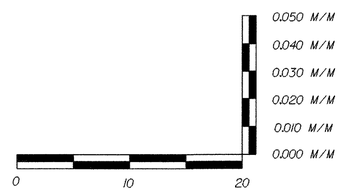

HORIZONTAL SCALE = 1:250
VERTICAL SCALE = 1:100

PROJECT NAME: HIGHGATE - FRANKLIN
PROJECT NUMBER: STP 0301(18)

FILE NAME: ...85c060/design/dc060xsl.dgn
PROJECT LEADER: DELLASANTA
DESIGNED BY: SQUAD B
IPARM FILE NAME: dc060b24.i

PLOT DATE: 09-MAY-2005
DRAWN BY: SQUAD B
CHECKED BY: SQUAD B
SHEET 271 OF 450

CONSTRUCTION APPROACH SIGNING

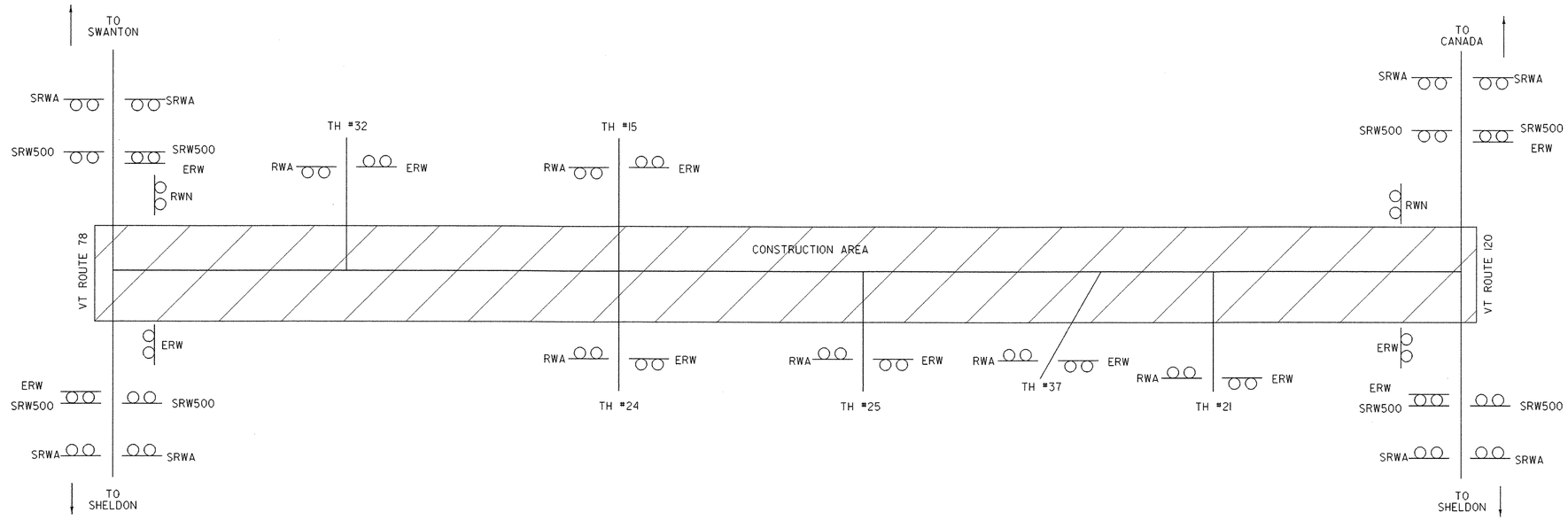

CONSTRUCTION APPROACH SIGNING
NOT TO SCALE
SEE STD E-100AM AND E-100M FOR SIGN PLACEMENT

LEGEND

SRWA = SIDE ROAD WORK AHEAD
SRW500 = SIDE ROAD WORK 500FT
ERW = END ROAD WORK
RWN = ROAD WORK NEXT 5 MILES
RWA = ROAD WORK AHEAD

TOWN HIGHWAY NAME	SIDE ROAD WORK AHEAD	SIDE ROAD WORK 500FT	END ROAD WORK	ROAD WORK NEXT 5 MILES	ROAD WORK AHEAD
ROUTE 78	4	4	2		
BEGIN PROJECT			1	1	1
TH #32			1		1
TH #15			1		1
TH #24			1		1
TH #25			1		1
TH #37			1		1
TH #21			1		1
END PROJECT			1	1	1
ROUTE 120	4	4	2		
TOTAL	8	8	12	2	8

ALL DIMENSIONS IN mm UNLESS OTHERWISE NOTED.

PROJECT NAME: HIGHGATE - FRANKLIN
PROJECT NUMBER: STP RS 0301(1) SA

FILE NAME: ...85c060/design/dc060dtl.dgn
PROJECT LEADER: DELLASANTA
DESIGNED BY: SQUAD B
IPARM FILE NAME: dc060cas.i

PLOT DATE: 09-MAY-2005
DRAWN BY: SQUAD B
CHECKED BY: SQUAD B
SHEET 272 OF 450

MOT Metric

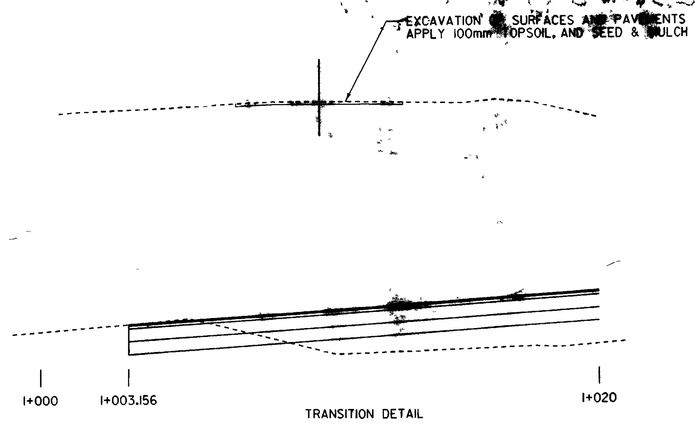

TRANSITION DETAIL

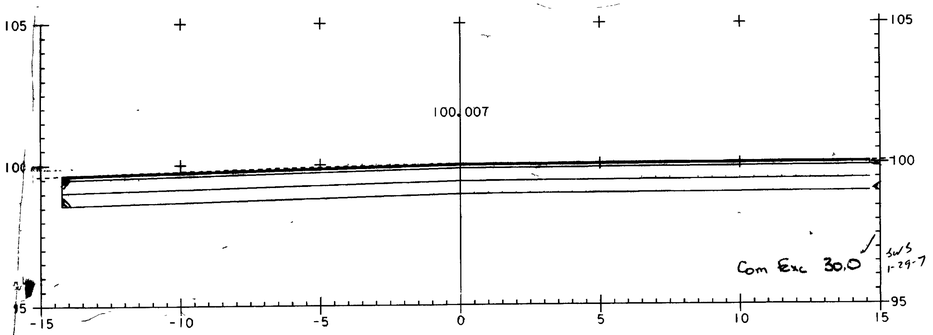

I+003.156
BEGIN PROJECT

STA I+003.156 BEGIN FULL DEPTH SUBBASE (450MM) AND SAND ~~(450MM)~~ ZERO

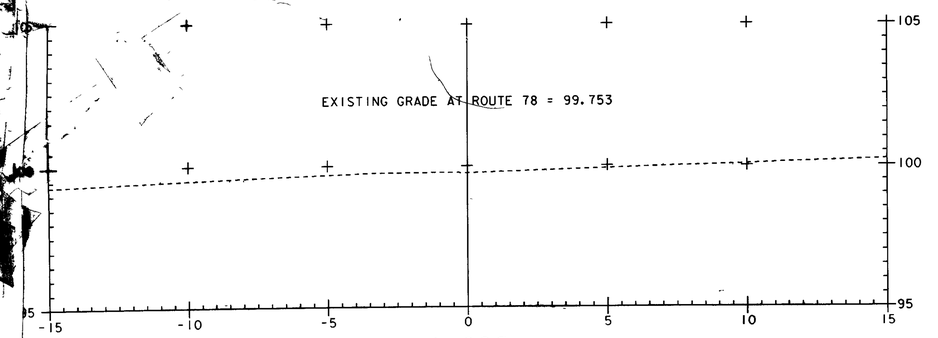

I+000

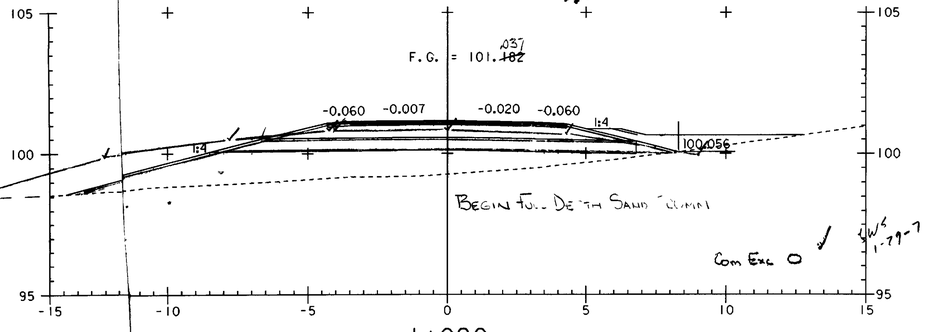

I+020

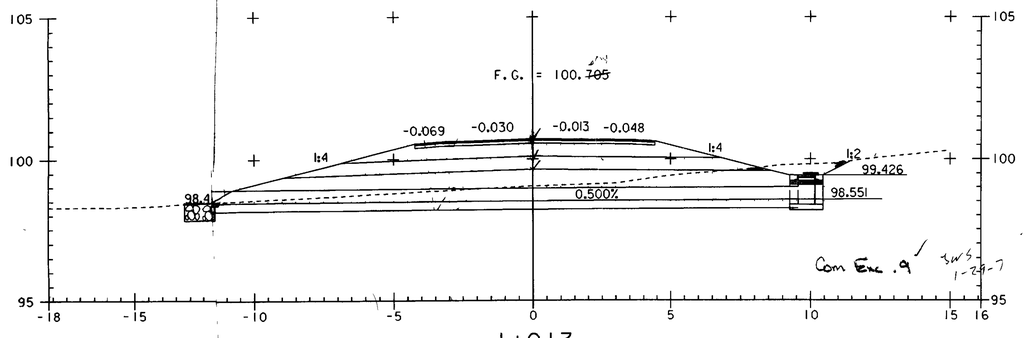

I+013
ASKEW = 81°29"41" RT

0 2 4 6 8 10
SCALE IN METERS

PROJECT NAME:	HIGHGATE - FRANKLIN
PROJECT NUMBER:	STP RS 0301(1) SA
FILE NAME: ...85c060\design\dc060x03.dgn	PLOT DATE: 09-MAY 2005
PROJECT LEADER: DELLASANTA	DRAWN BY: SQUAD B
DESIGNED BY: SQUAD B	CHECKED BY: SQUAD B
IPARM FILE NAME: ...c060x03.i	SHEET 287 OF 450

Zero Solid Rock 1+010

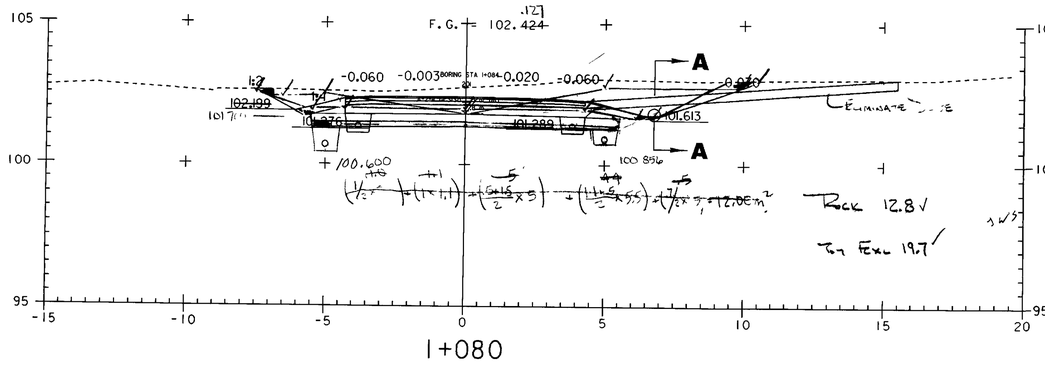

1+080

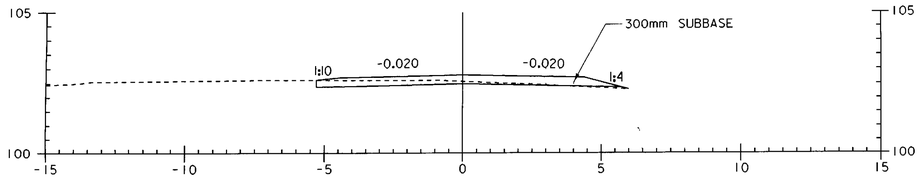

DRIVE AT 1+085 LT
SECTION A - A

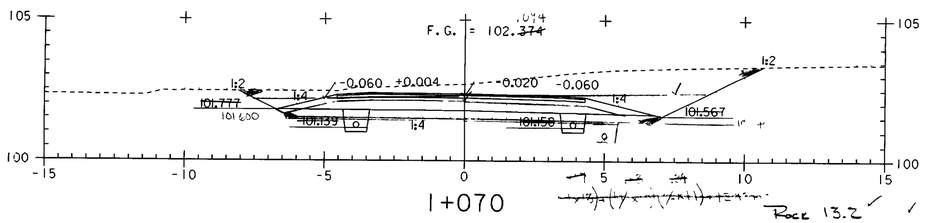

1+070

Rock 13.2
Tot Exc 23.5
SWS 1-29-7

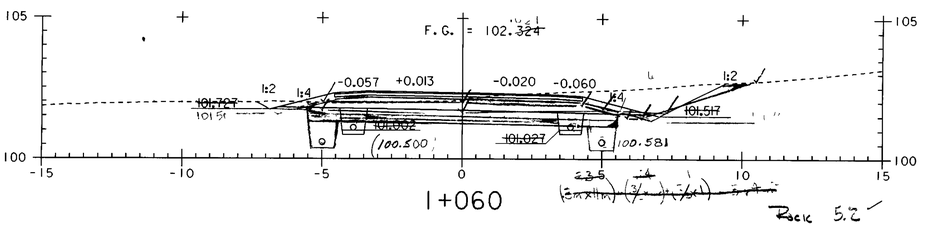

1+060

Rock 5.2
Tot Exc 13.1
SWS 1-29-7

STA 1+057.226 END TAPER
STA 1+055.530 END FULL DEPTH SAND (450 MM) BEGIN TAPER

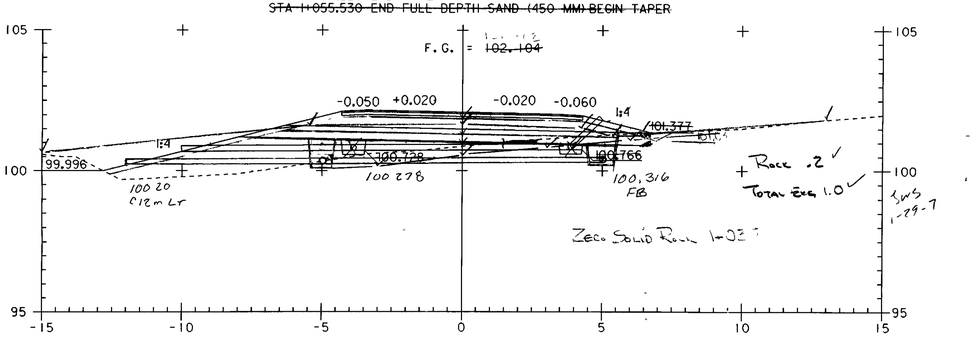

Rock .2
Total Exc 1.0
SWS 1-29-7

Zero Solid Rock 1+025

1+040

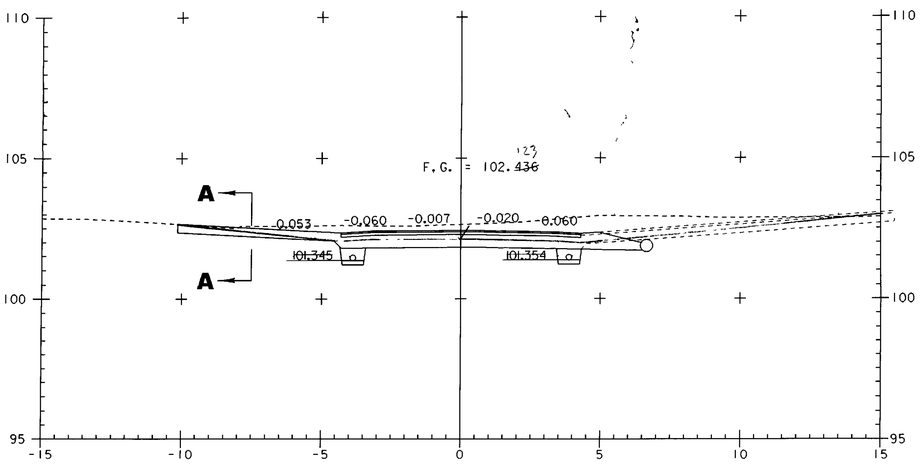

1+085

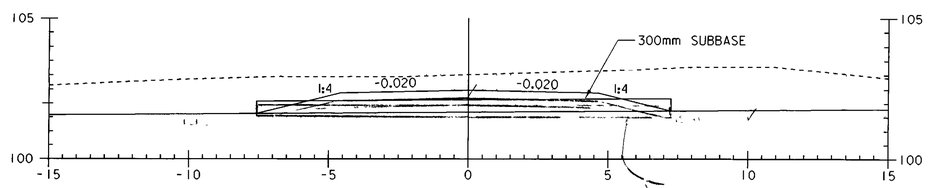

DRIVE AT 1+080 RT
SECTION A - A

0 2 4 6 8 10
SCALE IN METERS

PROJECT NAME:	HIGHGATE - FRANKLIN
PROJECT NUMBER:	STP RS 0301(1) SA
FILE NAME: ...85c060\design\dc060x03.dgn	PLOT DATE: 09-MAY-2005
PROJECT LEADER: DELLASANTA	DRAWN BY: SQUAD B
DESIGNED BY: SQUAD B	CHECKED BY: SQUAD B
IPARM FILE NAME: dc060x032.i	SHEET 288 OF 450

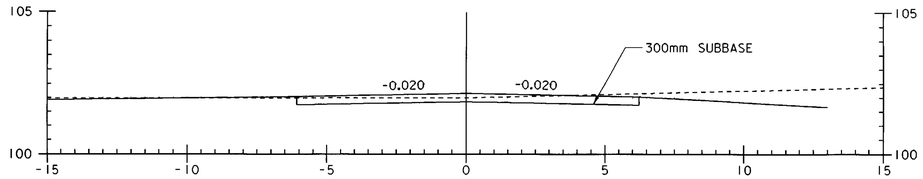

DRIVE AT 1+115 RT
SECTION A - A

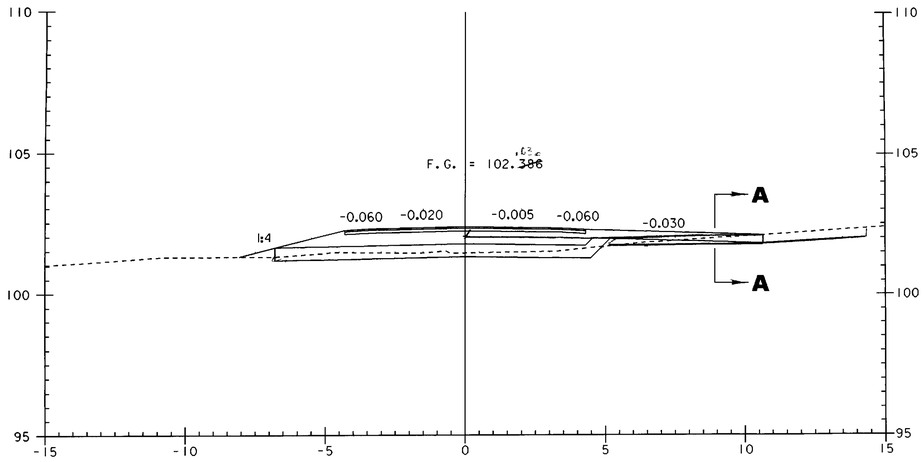

1+115

~~1+120.000~~
~~STA 1+109.060 END TAPER BEGIN FULL DEPTH SAND (450MM)~~
~~STA 1+107.120 BEGIN TAPER~~

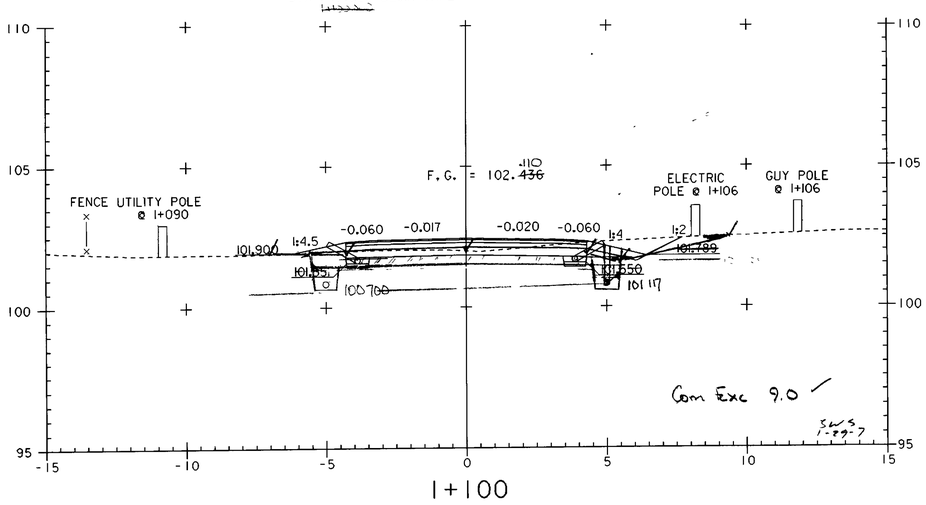

1+100

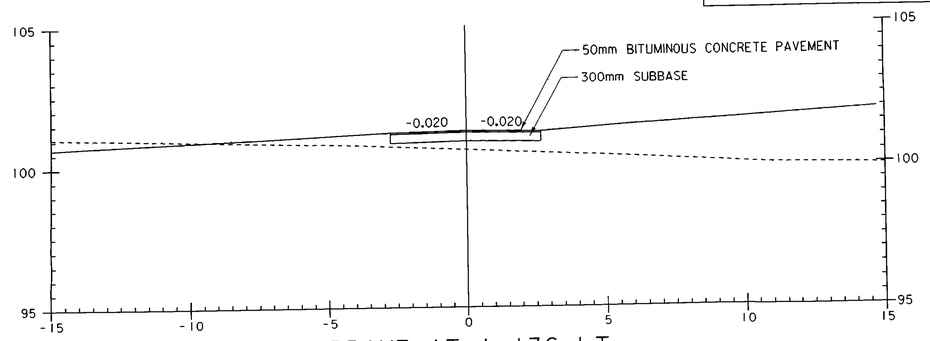

DRIVE AT 1+136 LT
SECTION A - A

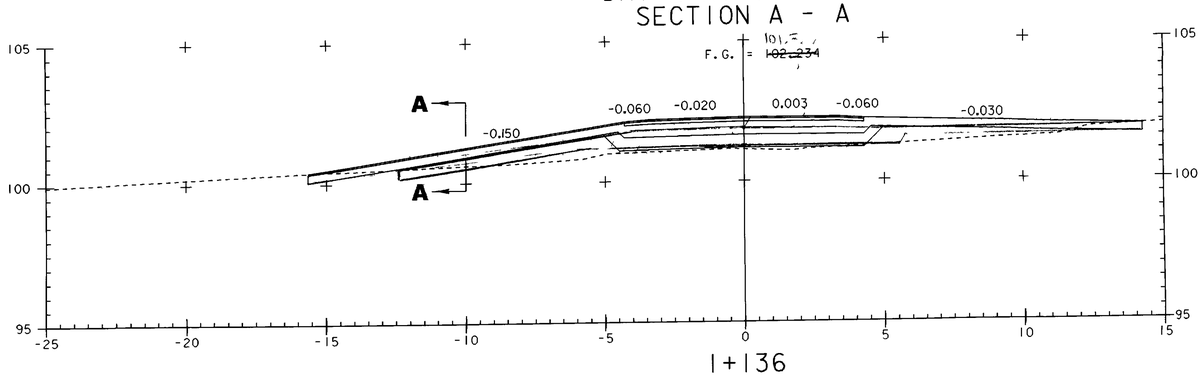

1+136

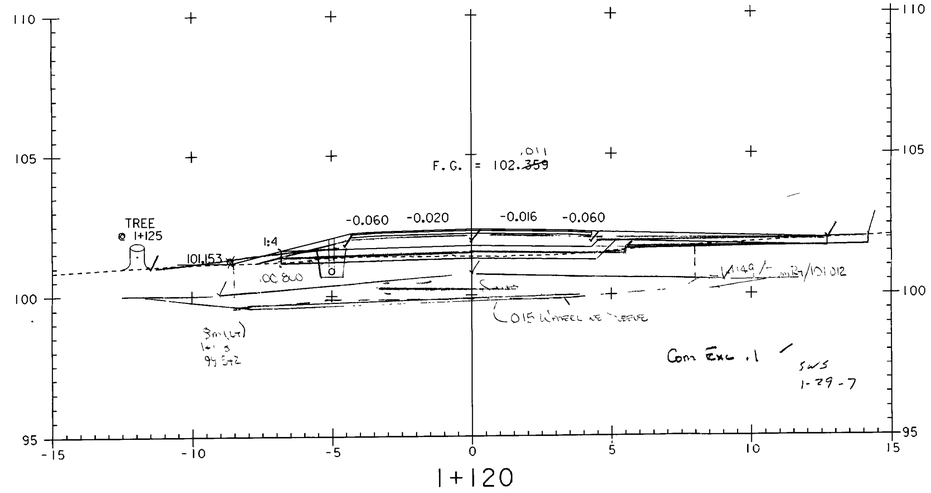

1+120

PROJECT NAME:	HIGHGATE - FRANKLIN
PROJECT NUMBER:	STP RS 0301(1) SA
FILE NAME: ...85c060\design\dc060x03.dgn	PLOT DATE: 09-MAY-2005
PROJECT LEADER: DELLASANTA	DRAWN BY: SQUAD B
DESIGNED BY: SQUAD B	CHECKED BY: SQUAD B
IPARM FILE NAME: dc060x033.i	SHEET 289 OF 450

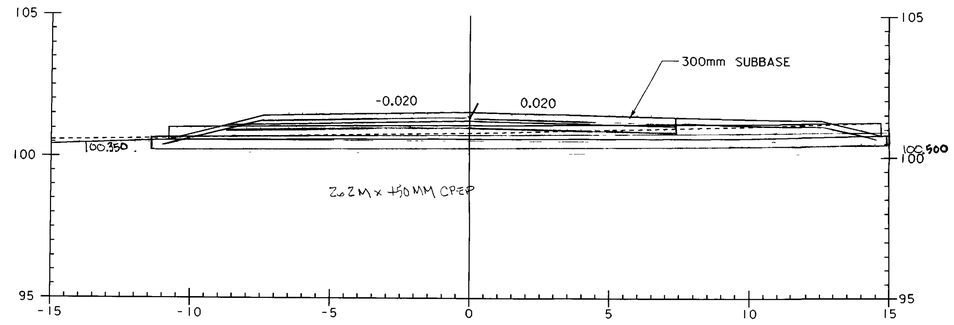

DRIVE AT 1+160 RT
SECTION A - A

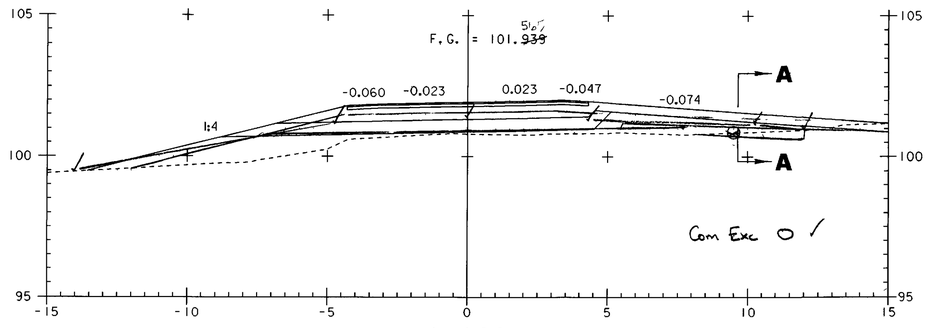

1+160

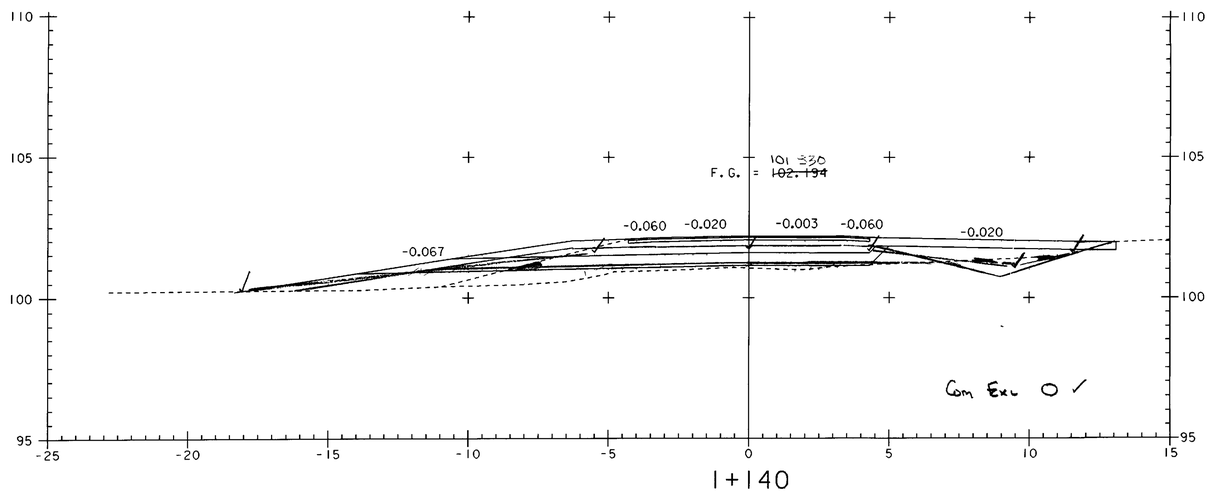

1+140

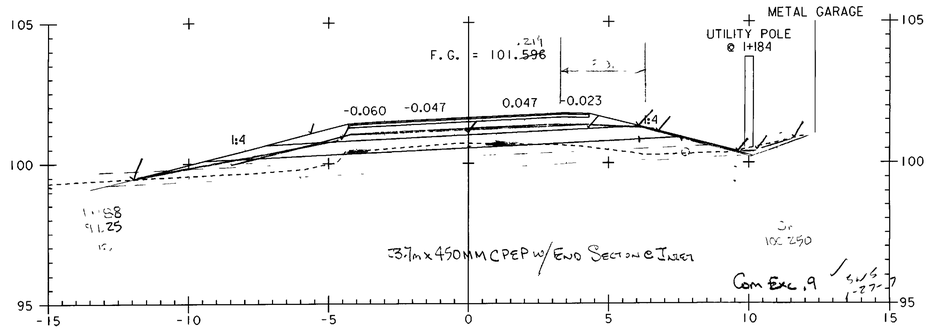

1+180

0 2 4 6 8 10
SCALE IN METERS

PROJECT NAME:	HIGHGATE - FRANKLIN
PROJECT NUMBER:	STP RS 0301(1) SA
FILE NAME: ...85c060\design\dc060x03.dgn	PLOT DATE: 09-MAY-2005
PROJECT LEADER: DELLASANTA	DRAWN BY: SQUAD B
DESIGNED BY: SQUAD B	CHECKED BY: SQUAD B
IPARM FILE NAME: dc060x034.i	SHEET 290 OF 450

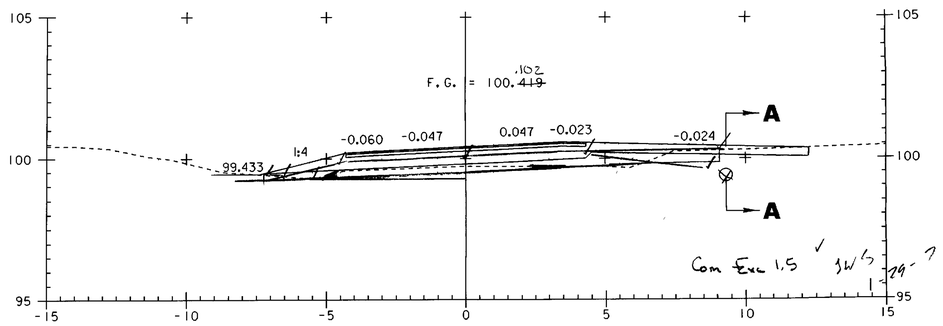

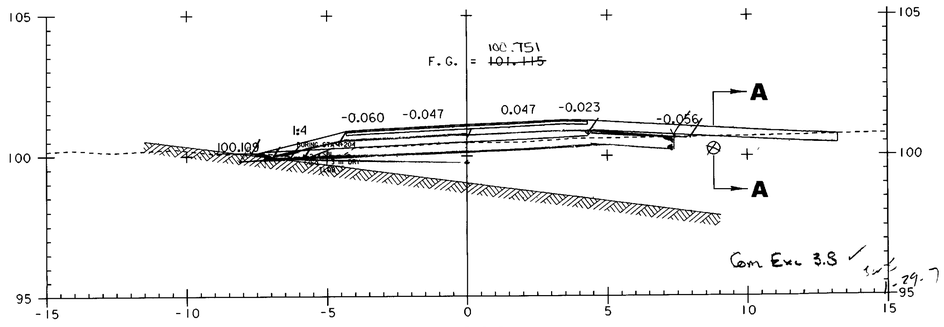

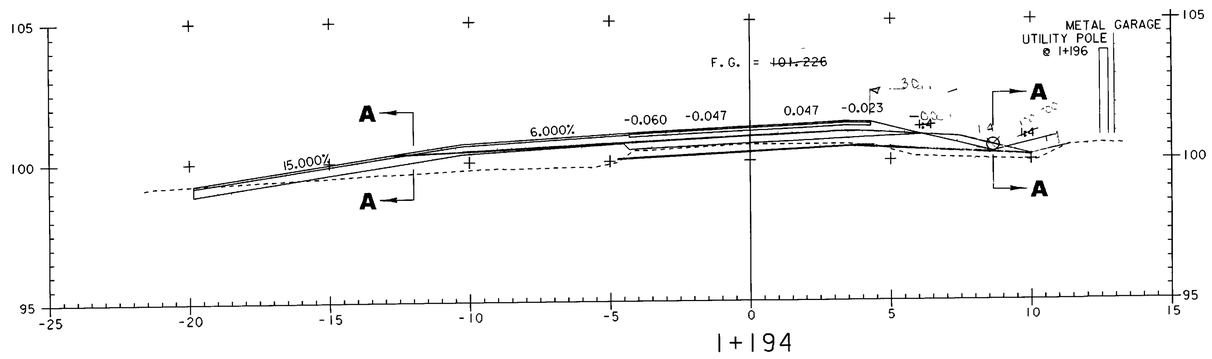

STA 1+190.300 END TAPER
STA 1+188.500 END FULL DEPTH SAND (450MM) BEGIN TAPER

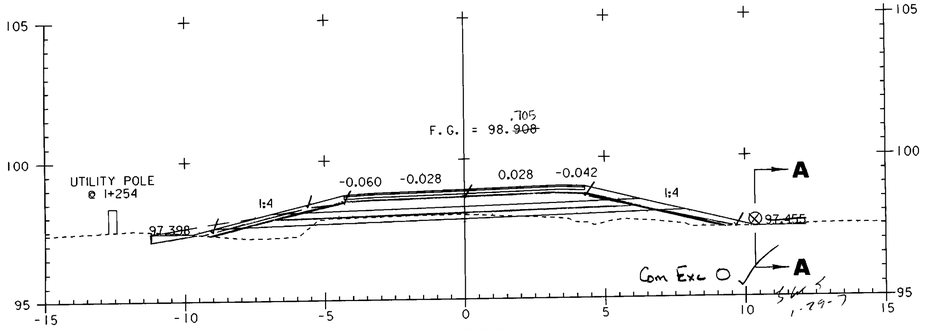

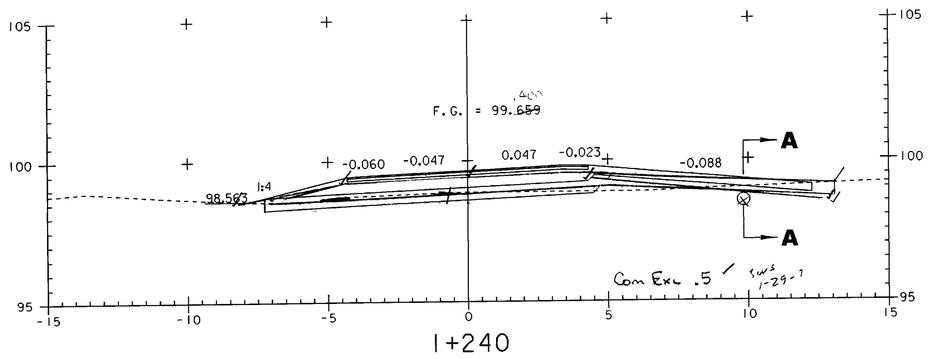

STA 1+224.100 END TAPER BEGIN FULL DEPTH SAND (450MM)
STA 1+221.980 BEGIN TAPER

0 2 4 6 8 10
SCALE IN METERS

PROJECT NAME:	HIGHGATE - FRANKLIN
PROJECT NUMBER:	STP RS 0301(1) SA
FILE NAME: ...85c060\design\dc060x03.dgn	PLOT DATE: 09-MAY-2005
PROJECT LEADER: DELLASANTA	DRAWN BY: SQUAD B
DESIGNED BY: SQUAD B	CHECKED BY: SQUAD B
IPARM FILE NAME: dc060x035.i	SHEET 291 OF 450

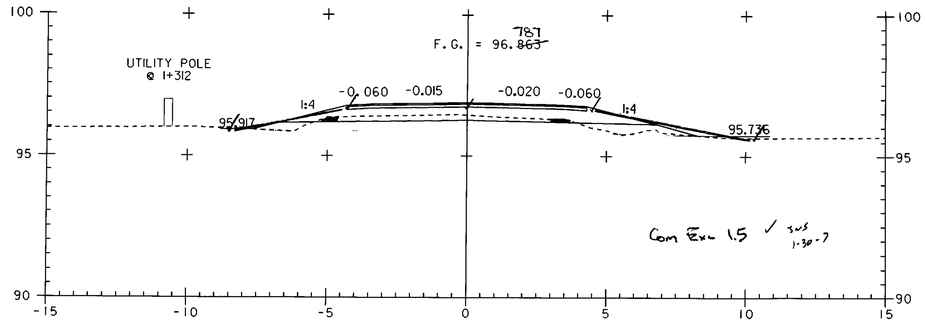

1+320

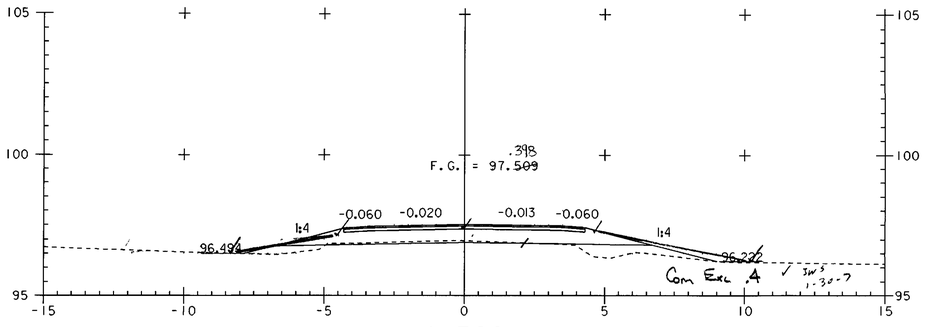

1+300

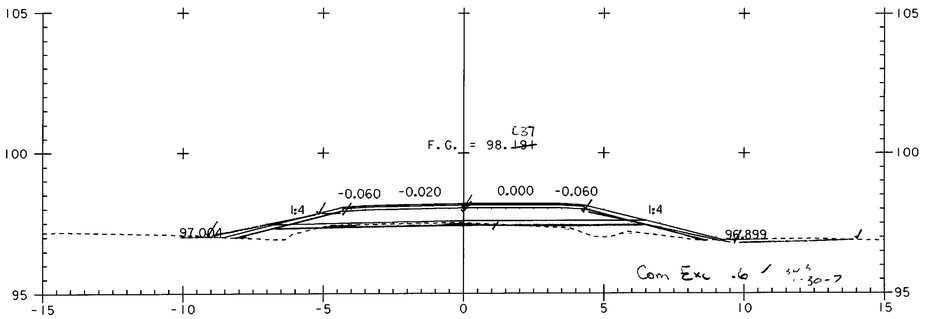

1+280

~~STA 1+274.880 END TAPER~~
~~STA 1+273.300 END FULL DEPTH SAND (450MM) BEGIN TAPER~~

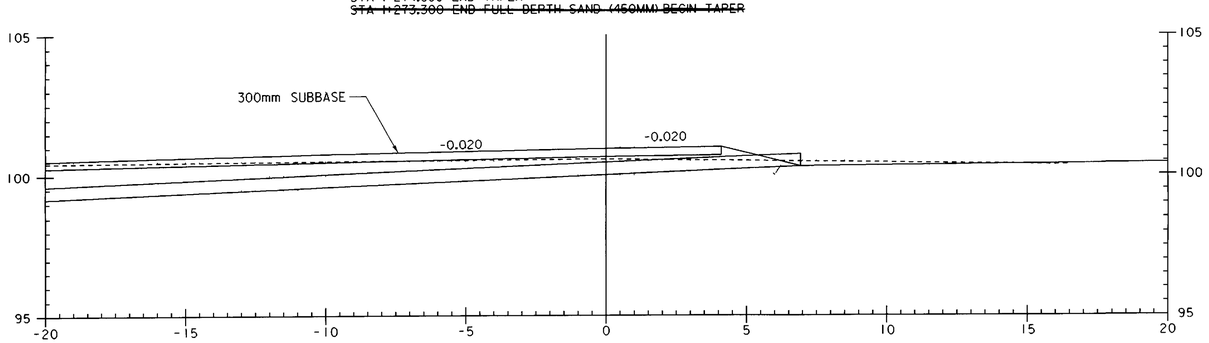

DRIVE AT STA 1+200 RT TO STA 1+260 RT
SECTION A - A

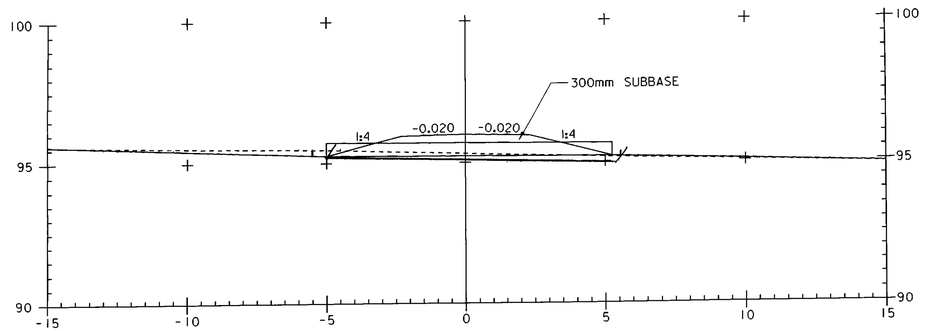

DRIVE AT 1+344 LT
SECTION A - A

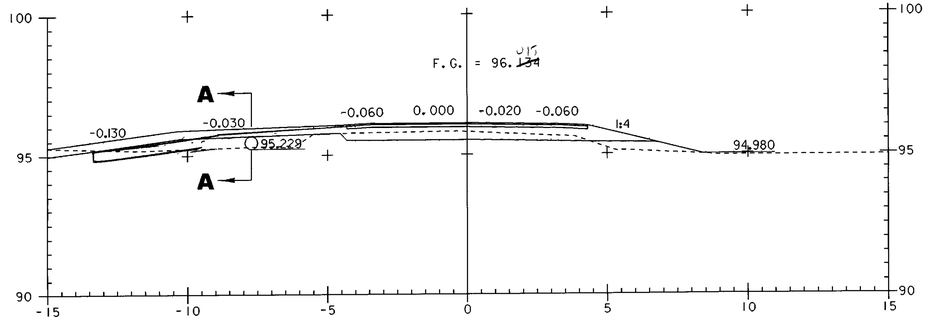

1+344

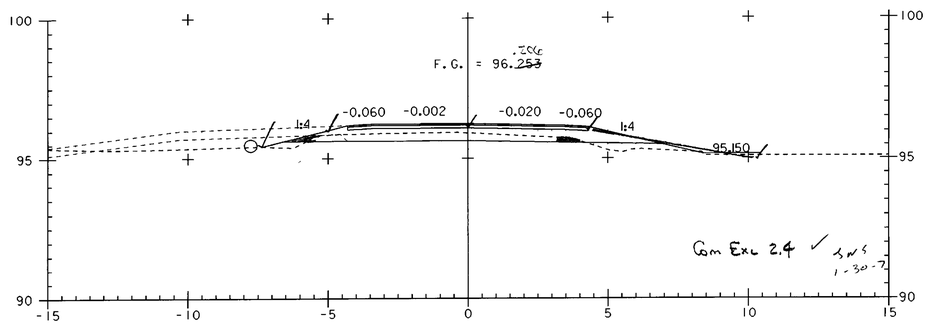

1+340

0 2 4 6 8 10
SCALE IN METERS

PROJECT NAME:	HIGHGATE - FRANKLIN
PROJECT NUMBER:	STP RS 0301(1) SA
FILE NAME: ...85c060\design\dc060x03.dgn	PLOT DATE: 09-MAY-2005
PROJECT LEADER: DELLASANTA	DRAWN BY: SQUAD B
DESIGNED BY: SQUAD B	CHECKED BY: SQUAD B
IPARM FILE NAME: dc060x036.i	SHEET 292 OF 450

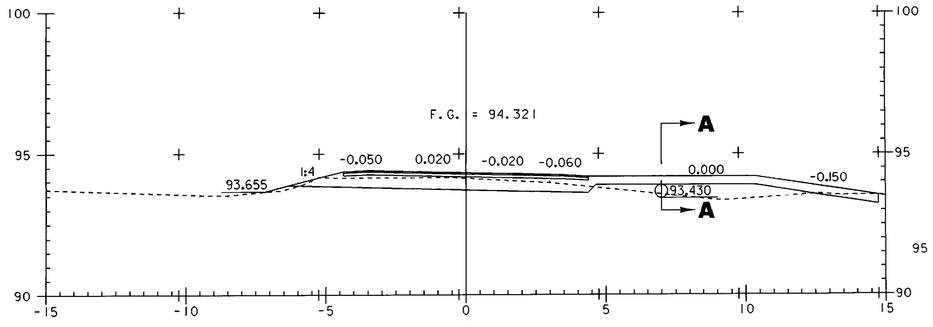

1+414

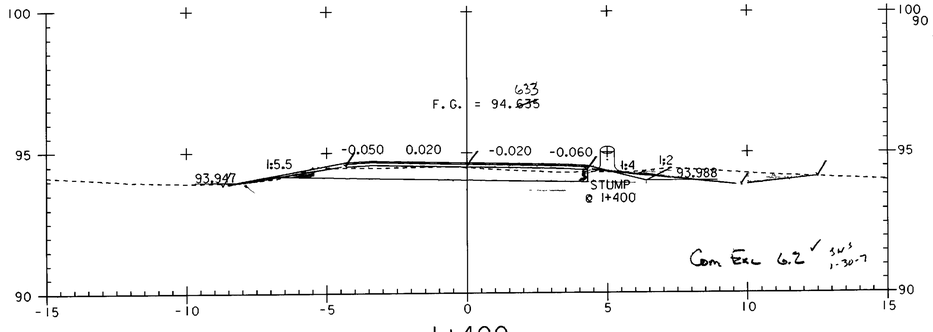

1+400

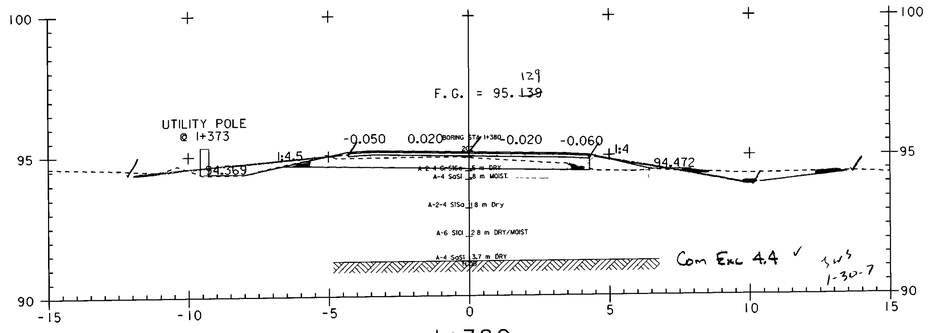

1+380

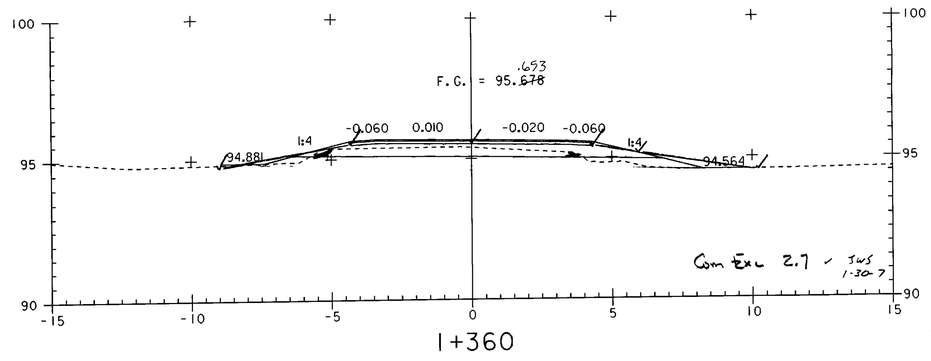

1+360

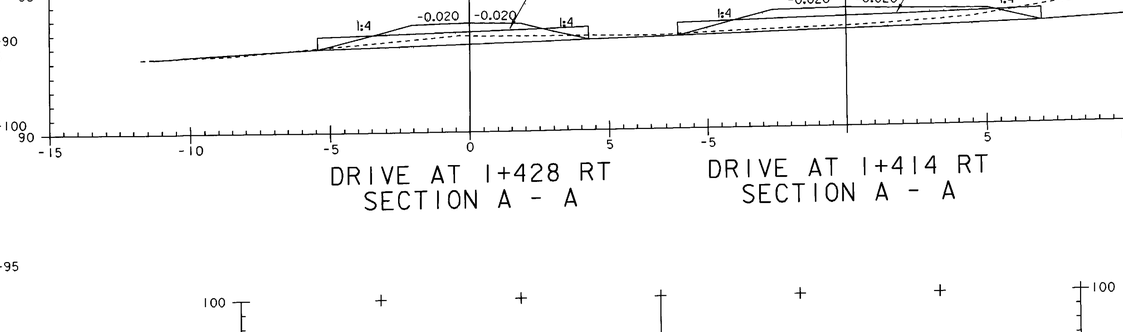

DRIVE AT 1+428 RT
SECTION A - A

DRIVE AT 1+414 RT
SECTION A - A

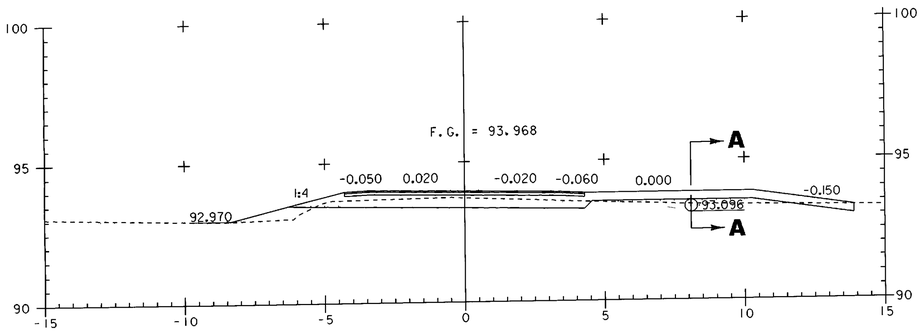

1+428

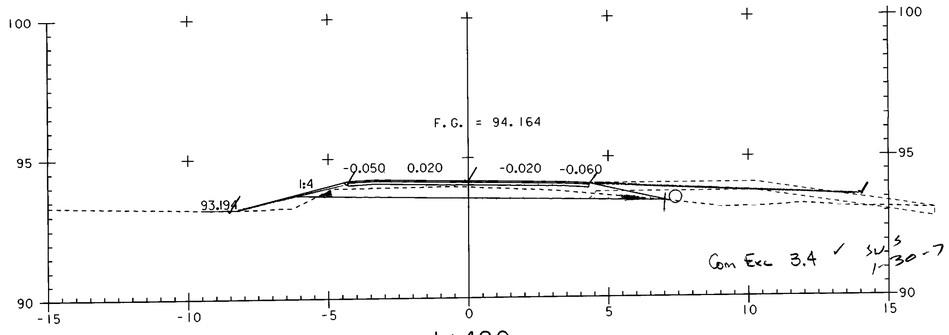

1+420

0 2 4 6 8 10
SCALE IN METERS

PROJECT NAME:	HIGHGATE - FRANKLIN
PROJECT NUMBER:	STP RS 0301(1) SA
FILE NAME: ...85c060\design\dc060x03.dgn	PLOT DATE: 09-MAY-2005
PROJECT LEADER: DELLASANTA	DRAWN BY: SQUAD B
DESIGNED BY: SQUAD B	CHECKED BY: SQUAD B
IPARM FILE NAME: dc060x037.i	SHEET 293 OF 450

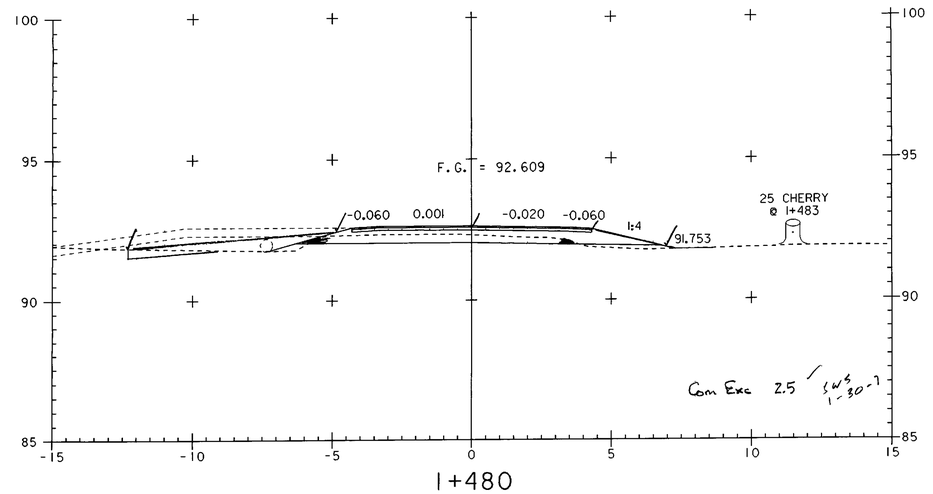

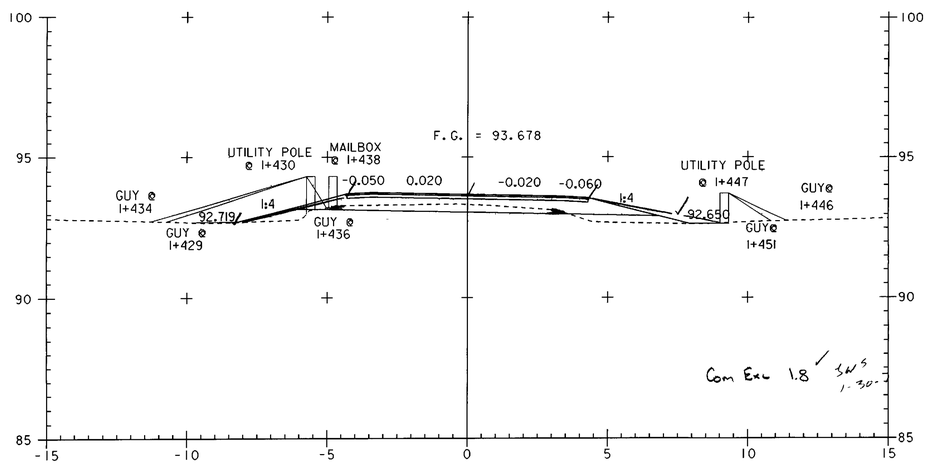

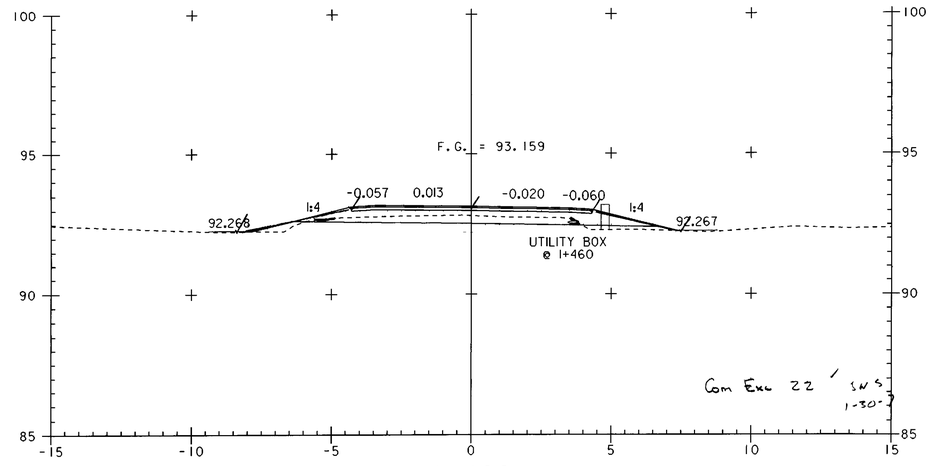

0 2 4 6 8 10
SCALE IN METERS

PROJECT NAME: HIGHGATE - FRANKLIN	
PROJECT NUMBER: STP RS 0301(1) SA	
FILE NAME: ...85c060\design\dc060x03.dgn	PLOT DATE: 09-MAY-2005
PROJECT LEADER: DELLASANTA	DRAWN BY: SQUAD B
DESIGNED BY: SQUAD B	CHECKED BY: SQUAD B
IPARM FILE NAME: dc060x038.i	SHEET 294 OF 450

Metric

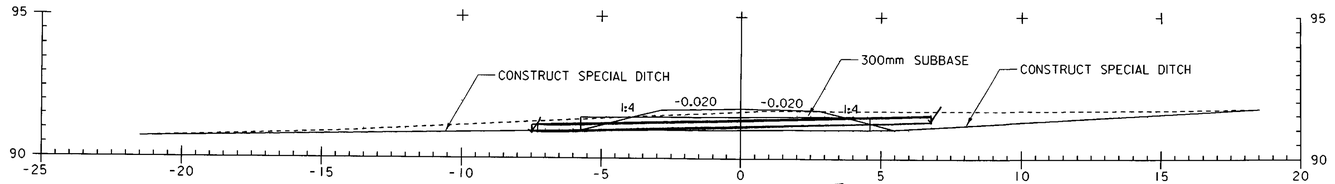

DRIVE AT 1+498.7 RT
SECTION A - A

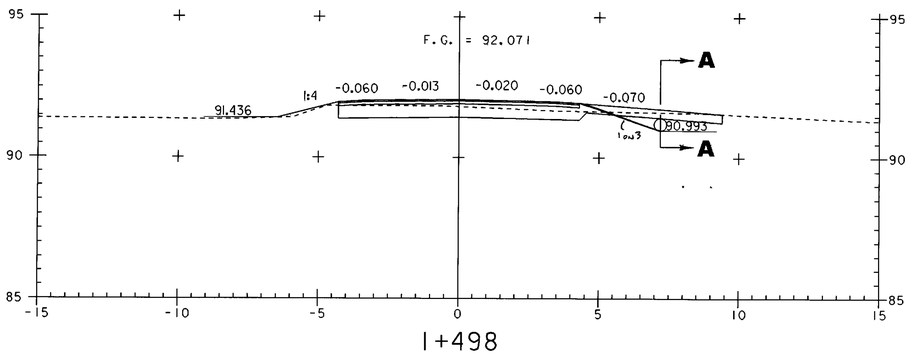

1+498

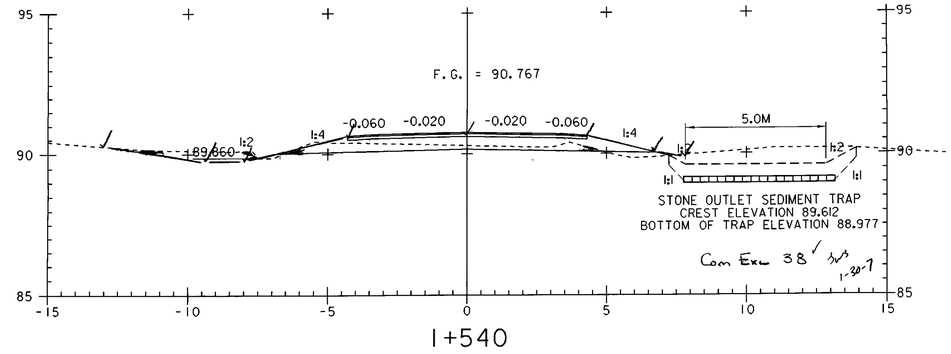

1+540

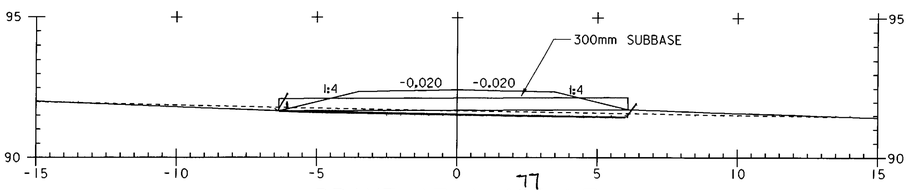

DRIVE AT 1+484 LT
SECTION A - A

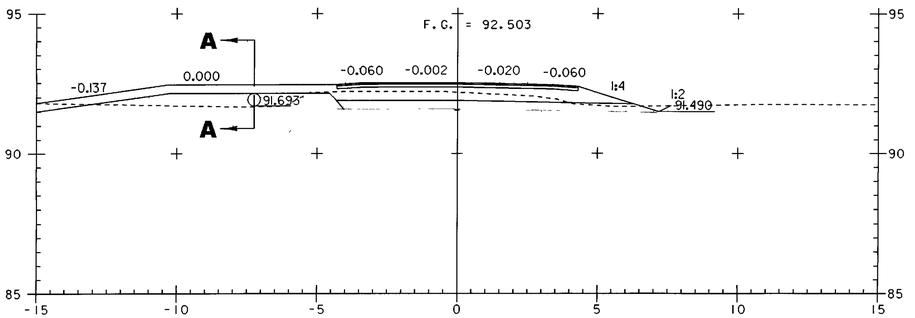

1+484

1+520

1+500

0 2 4 6 8 10
SCALE IN METERS

PROJECT NAME:	HIGHGATE - FRANKLIN
PROJECT NUMBER:	STP RS 0301(1) SA
FILE NAME: ...85c060\design\dc060x03.dgn	PLOT DATE: 09-MAY-2005
PROJECT LEADER: DELLASANTA	DRAWN BY: SQUAD B
DESIGNED BY: SQUAD B	CHECKED BY: SQUAD B
IPARM FILE NAME: dc060x039.i	SHEET 295 OF 450

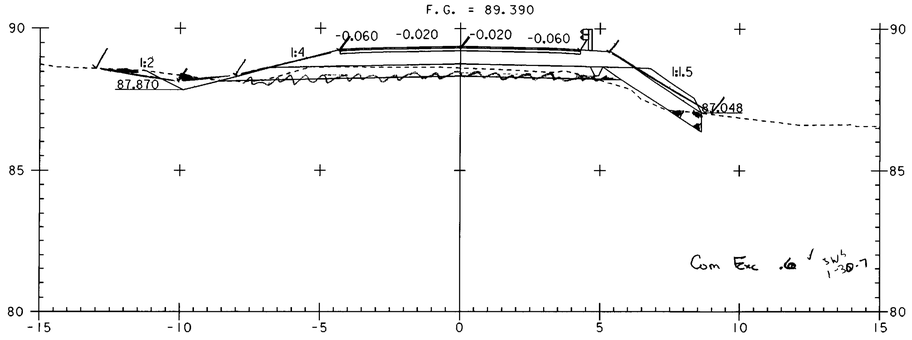

1+580

~~STA 1+579.892 END FULL DEPTH SAND (450MM) BEGIN TAPER~~
~~STA 1+569.982 END TAPER BEGIN FULL DEPTH SAND (450MM)~~
~~STA 1+567.888 BEGIN TAPER~~

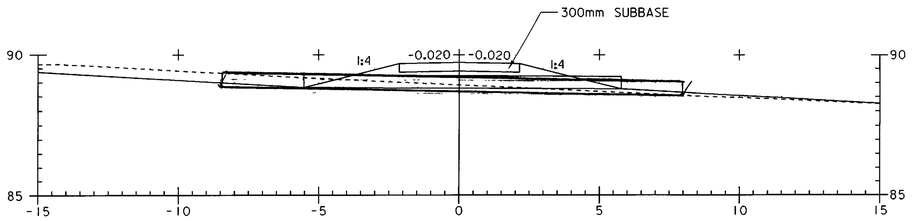

DRIVE AT 1+564 LT
SECTION A - A

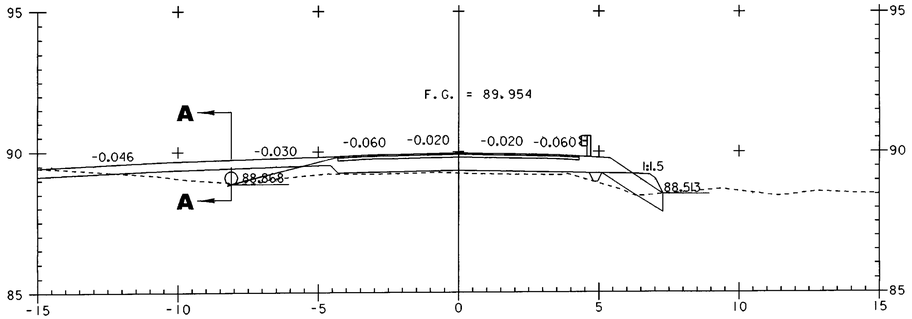

1+564

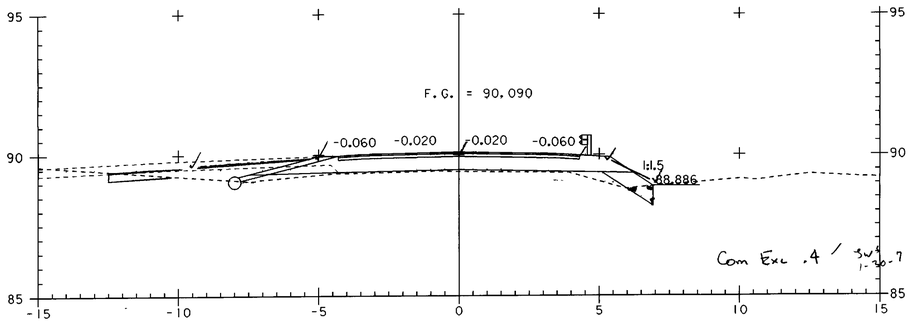

1+560

0 2 4 6 8 10
SCALE IN METERS

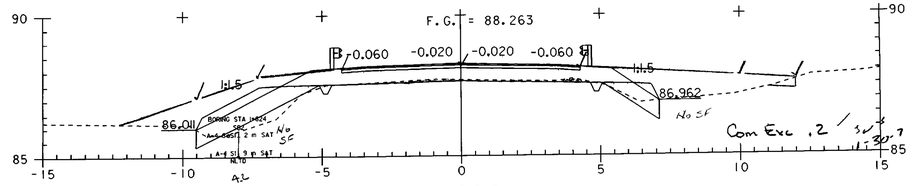

1+620

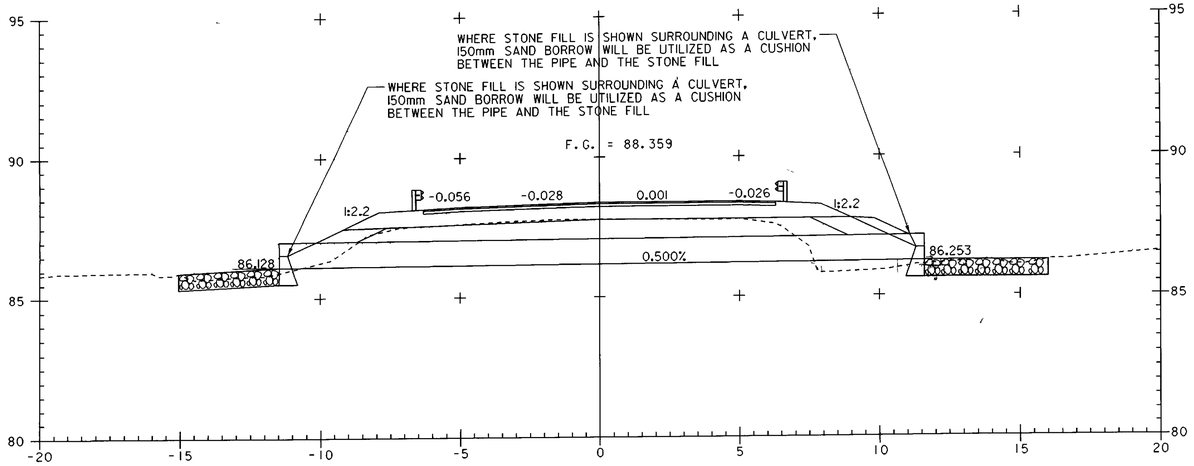

1+615
ASKEW = 43° 00' 50" LT

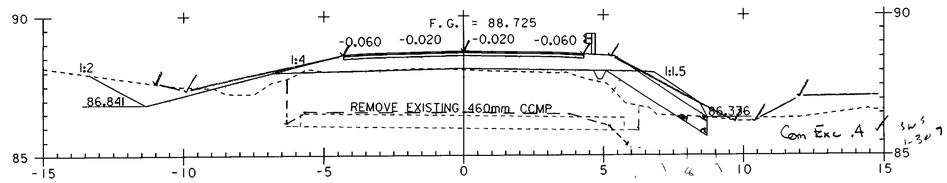

1+600

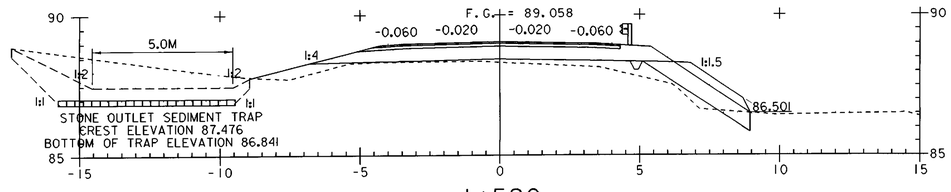

1+590

STA 1+581.472 END TAPER

PROJECT NAME:	HIGHGATE - FRANKLIN
PROJECT NUMBER:	STP RS 0301(1) SA
FILE NAME: ...85c060\design\dc060x03.dgn	PLOT DATE: 09-MAY-2005
PROJECT LEADER: DELLASANTA	DRAWN BY: SQUAD B
DESIGNED BY: SQUAD B	CHECKED BY: SQUAD B
IPARM FILE NAME: dc060x0310.i	SHEET 296 OF 450

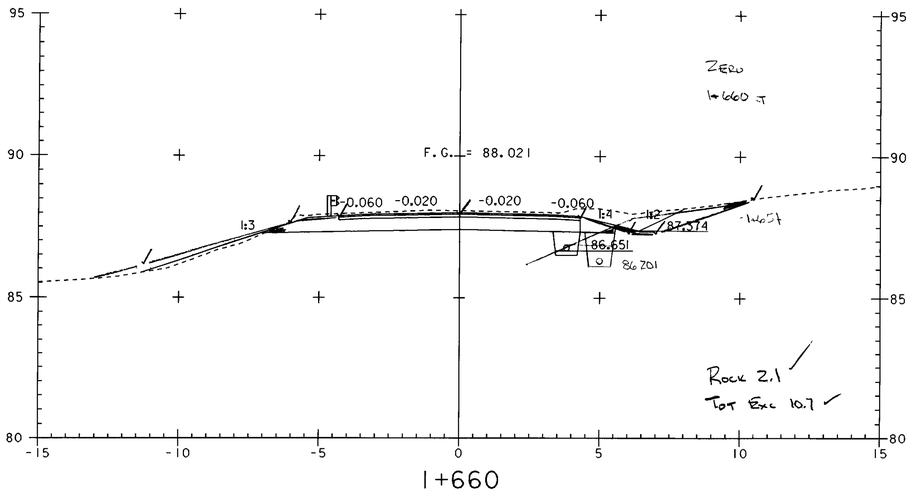

1+660

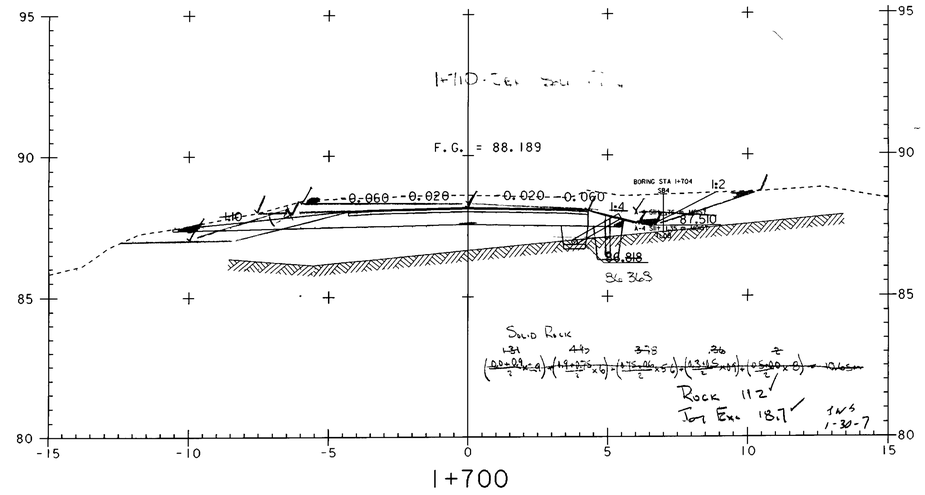

1+700

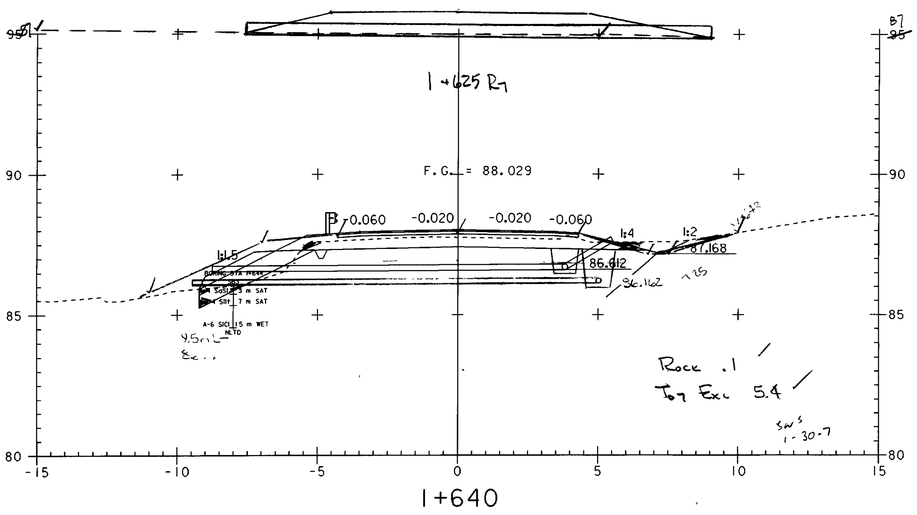

1+640

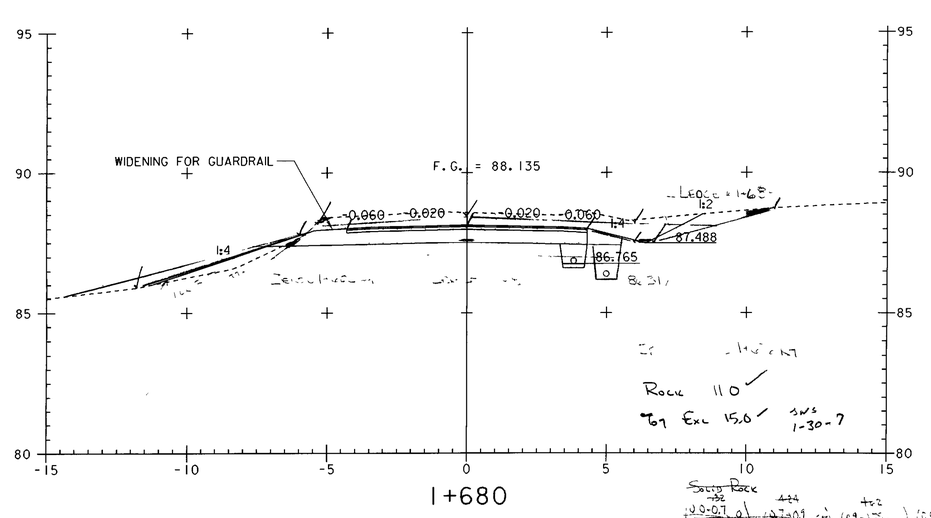

1+680

0 2 4 6 8 10
SCALE IN METERS

PROJECT NAME:	HIGHGATE - FRANKLIN
PROJECT NUMBER:	STP RS 0301(1) SA
FILE NAME: ...85c060\design\dc060x03.dgn	PLOT DATE: 09-MAY-2005
PROJECT LEADER: DELLASANTA	DRAWN BY: SQUAD B
DESIGNED BY: SQUAD B	CHECKED BY: SQUAD B
IPARM FILE NAME: dc060x0311.1	SHEET 297 OF 450

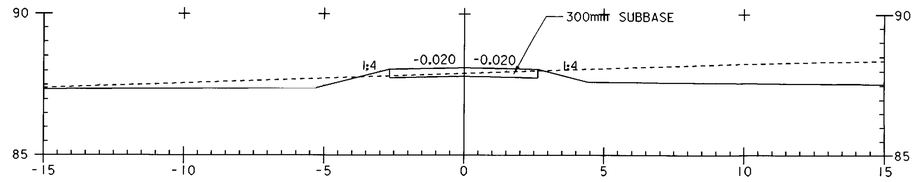

DRIVE AT 1+724 RT
SECTION A - A

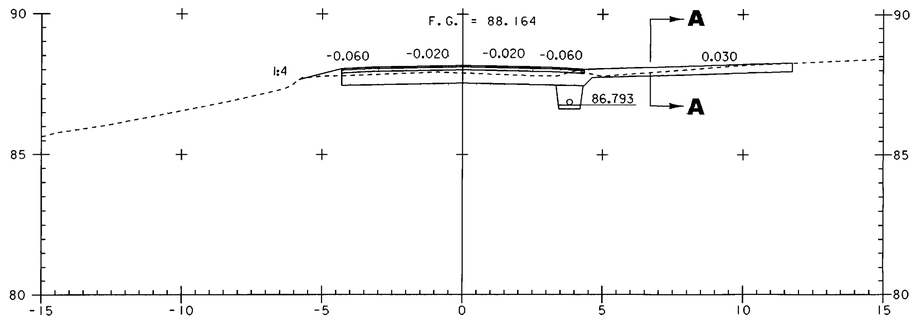

1+724

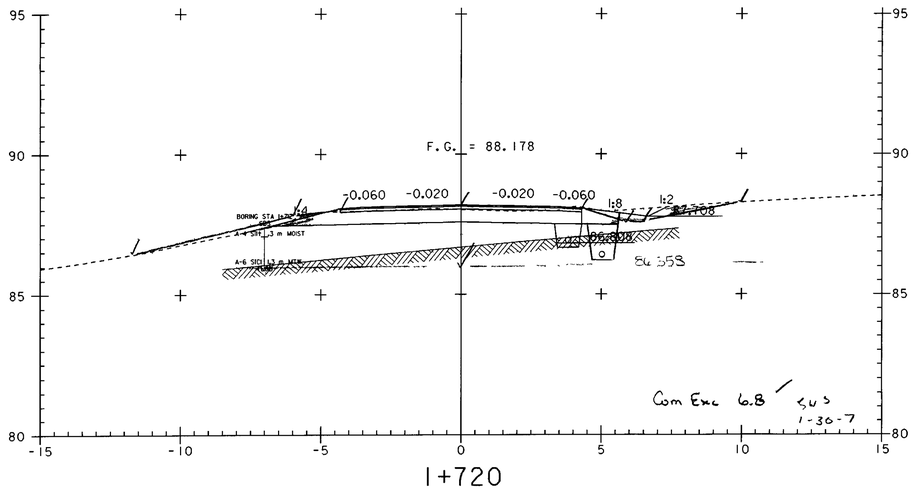

1+720

WHERE STONE FILL IS SHOWN SURROUNDING A CULVERT, 150mm SAND BORROW WILL BE UTILIZED AS A CUSHION BETWEEN THE PIPE AND THE STONE FILL

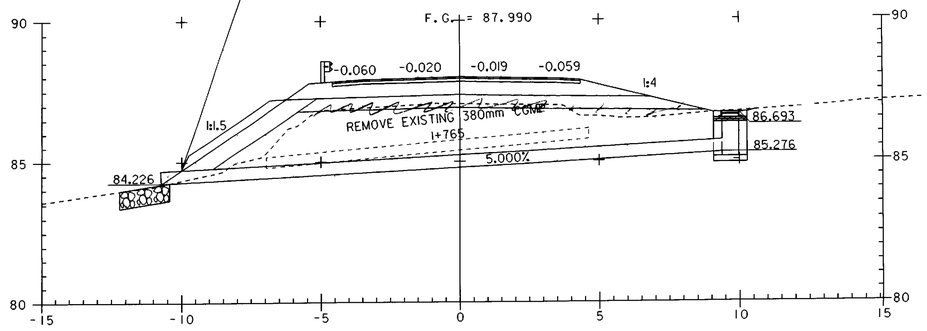

1+763
ASKEW = 83° 12' 33" LT

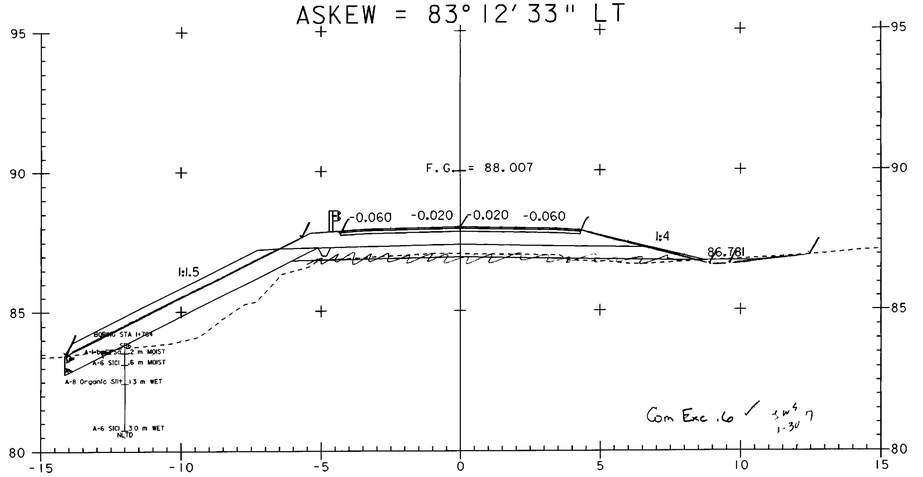

1+760

~~STA 1+741.220 END TAPER BEGIN FULL DEPTH SAND (450MM)~~

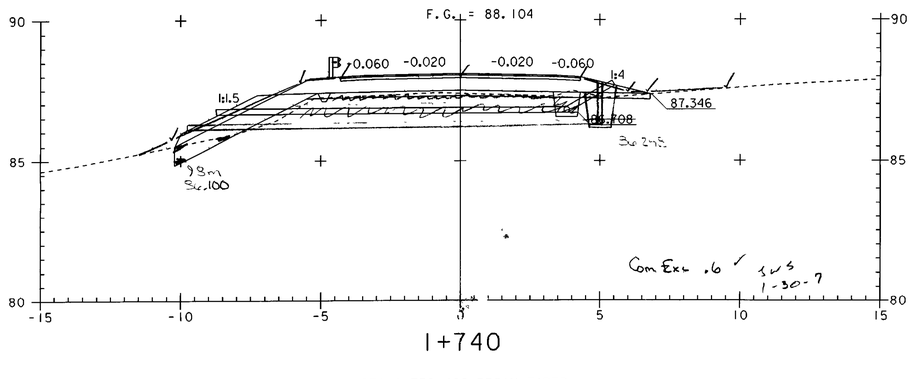

1+740

STA 1+739.400 ~~BEGIN TAPER~~

0 2 4 6 8 10
SCALE IN METERS

PROJECT NAME:	HIGHGATE - FRANKLIN
PROJECT NUMBER:	STP RS 0301(1) SA
FILE NAME: ...85c060\design\dc060x03.dgn	PLOT DATE: 09-MAY-2005
PROJECT LEADER: DELLASANTA	DRAWN BY: SQUAD B
DESIGNED BY: SQUAD B	CHECKED BY: SQUAD B
IPARM FILE NAME: dc060x0312.i	SHEET 298 OF 450

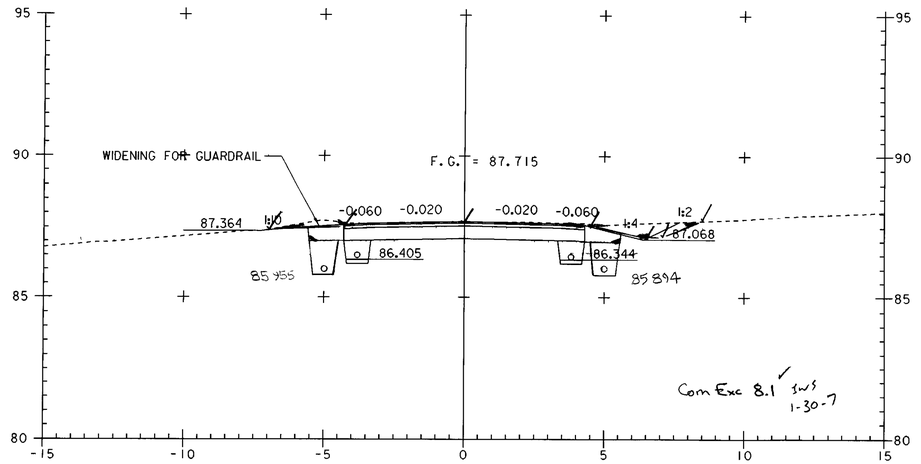

I+820

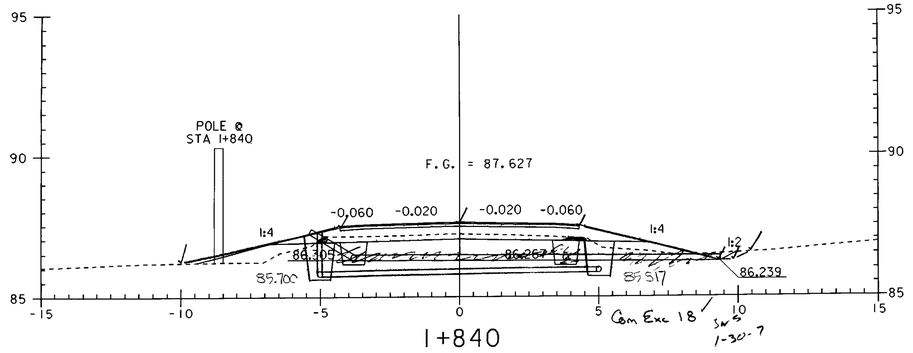

I+840

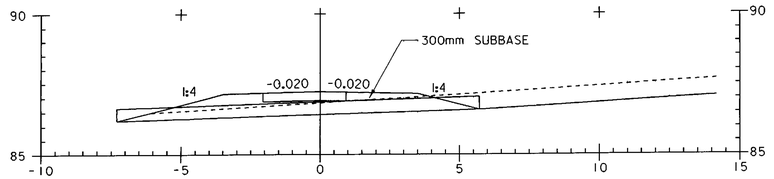

~~DRIVE AT I+834 RT~~ ELIMINATED 10-27-06
SECTION B - B

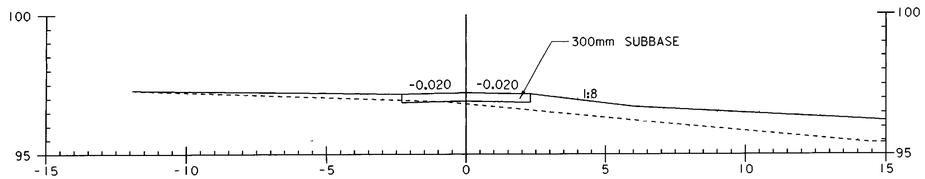

DRIVE AT I+834 LT
SECTION A - A

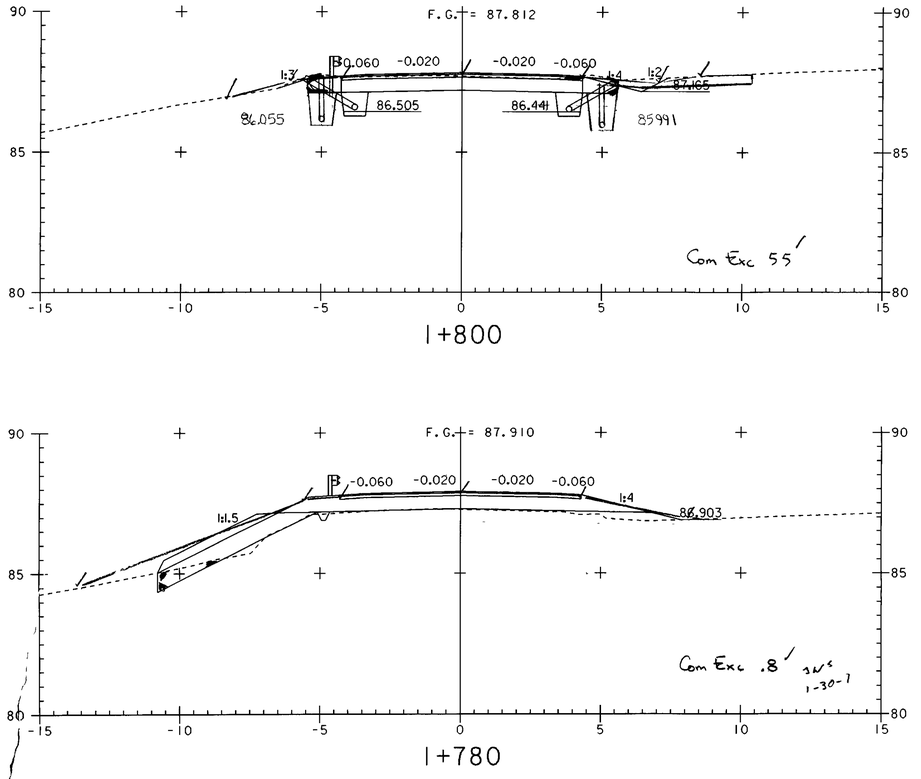

I+800

I+780

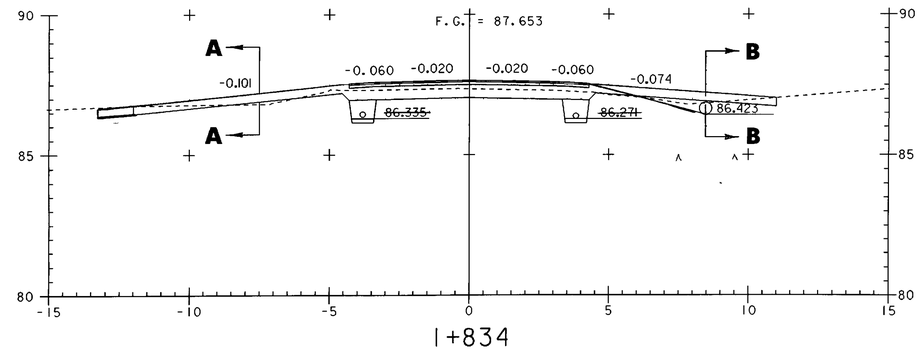

I+834

~~STA 1+776.680 END TAPER~~
~~STA 1+774.920 END FULL DEPTH SAND (450MM) BEGIN TAPER~~

0 2 4 6 8 10
SCALE IN METERS

PROJECT NAME:	HIGHGATE - FRANKLIN
PROJECT NUMBER:	STP RS 0301(I) SA
FILE NAME: ...85c060\design\dc060x03.dgn	PLOT DATE: 09-MAY-2005
PROJECT LEADER: DELLASANTA	DRAWN BY: SQUAD B
DESIGNED BY: SQUAD B	CHECKED BY: SQUAD B
IPARM FILE NAME: dc060x0313.i	SHEET 299 OF 450

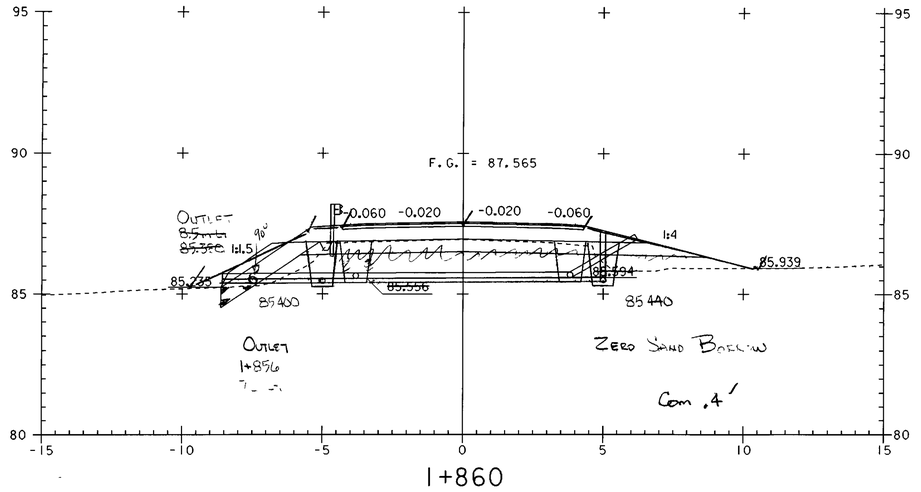

1+860

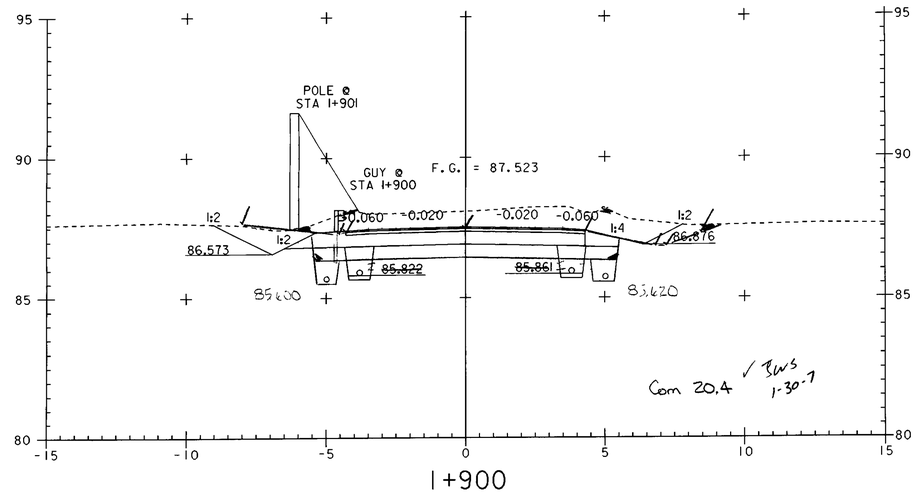

1+900

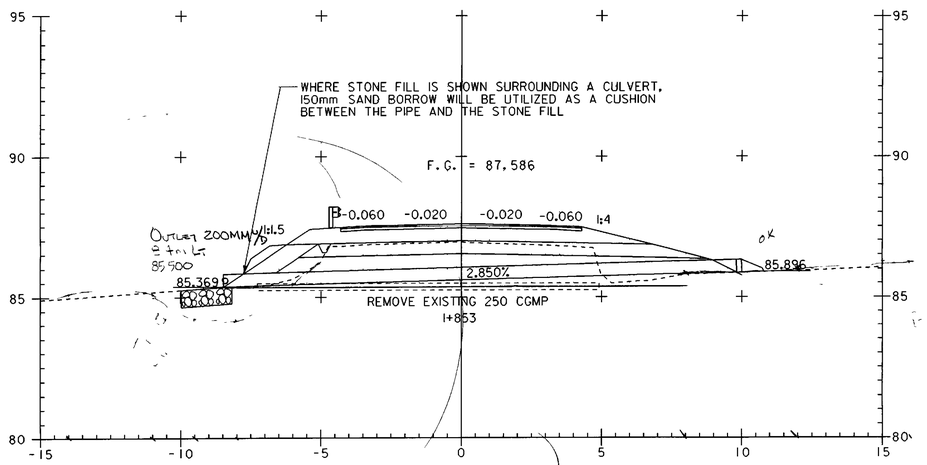

1+853

ASKEW = 82° 49' 21" LT

~~STA 1+847.940 END TAPER BEGIN FULL DEPTH SAND (450MM)~~
~~STA 1+846.100 BEGIN TAPER~~

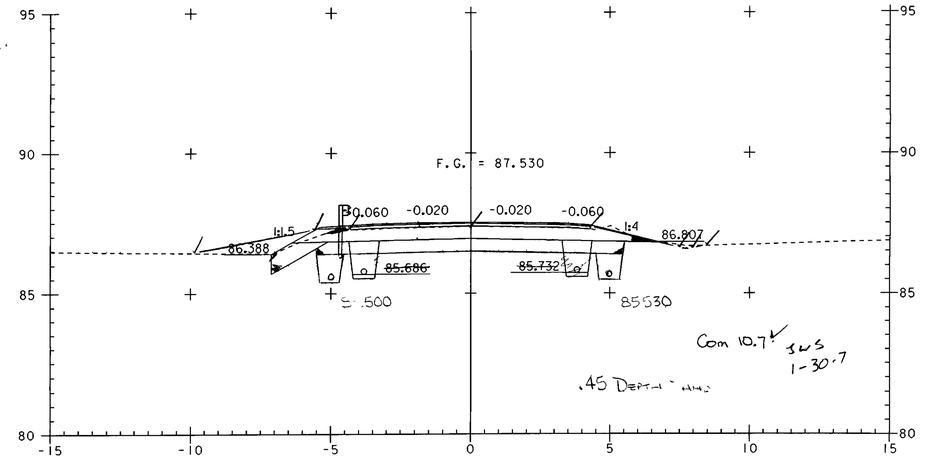

1+880

~~STA 1+865.420 END TAPER~~
~~STA 1+863.620 END FULL DEPTH SAND (450MM) BEGIN TAPER~~

0 2 4 6 8 10

SCALE IN METERS

PROJECT NAME: HIGHGATE - FRANKLIN
PROJECT NUMBER: STP RS 0301(I) SA

FILE NAME: ...85c060\design\dc060x03.dgn PLOT DATE: 09-MAY-2005
PROJECT LEADER: DELLASANTA DRAWN BY: SQUAD B
DESIGNED BY: SQUAD B CHECKED BY: SQUAD B
IPARM FILE NAME: dc060x0314.i SHEET 300 OF 450

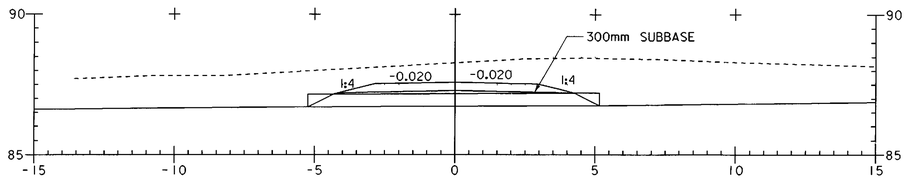

DRIVE AT 1+920 LT
A - A

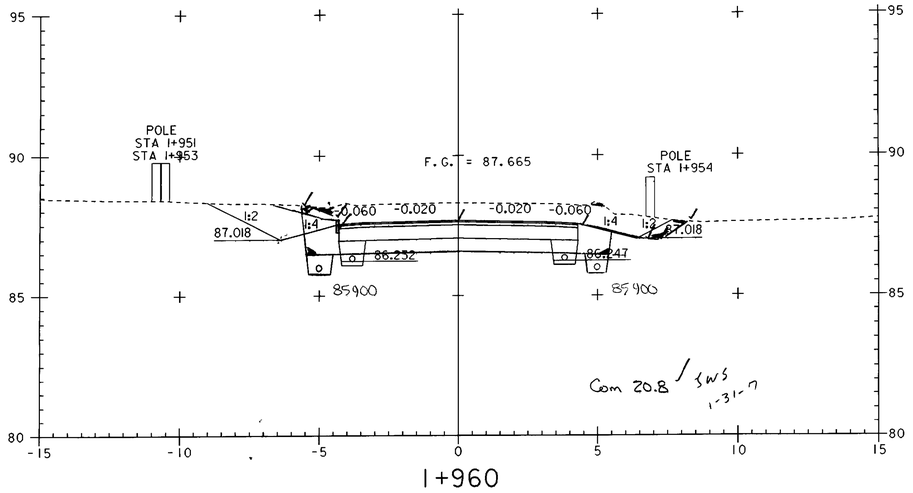

1+960

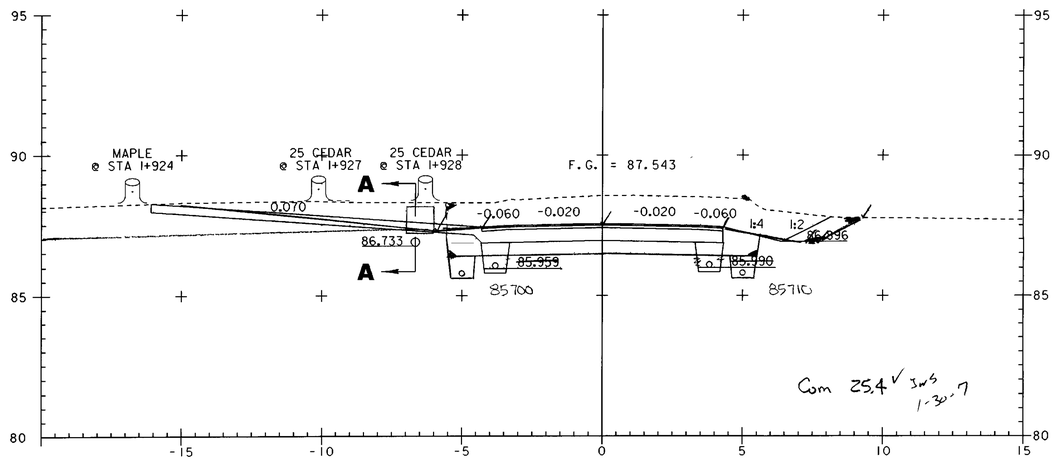

1+920

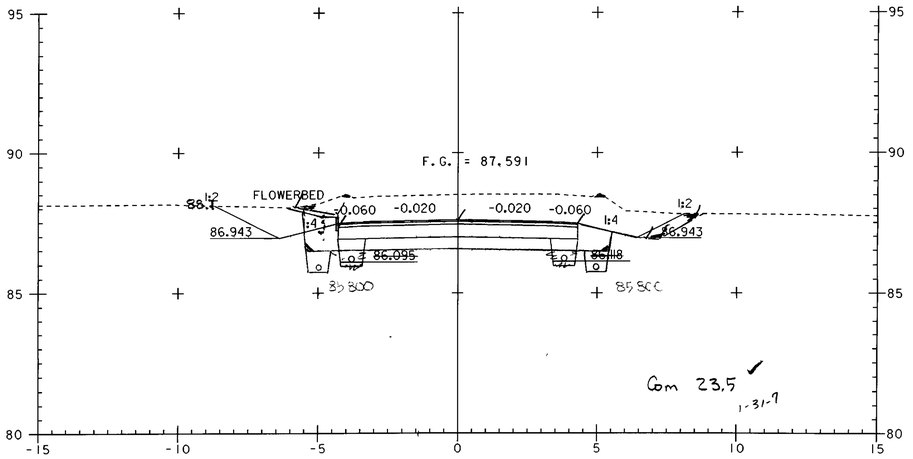

1+940

0 2 4 6 8 10
SCALE IN METERS

PROJECT NAME:	HIGHGATE - FRANKLIN
PROJECT NUMBER:	STP RS 0301(1) SA
FILE NAME: ...85c060\design\dc060x03.dgn	PLOT DATE: 09-MAY-2005
PROJECT LEADER: DELLASANTA	DRAWN BY: SQUAD B
DESIGNED BY: SQUAD B	CHECKED BY: SQUAD B
IPARM FILE.NAME: dc060x0315.i	SHEET 301 OF 450

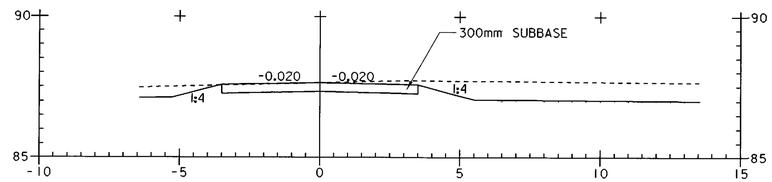

DRIVE AT 1+973 RT
B - B

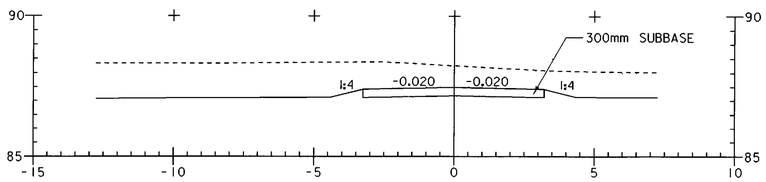

DRIVE AT 1+973 LT
A - A

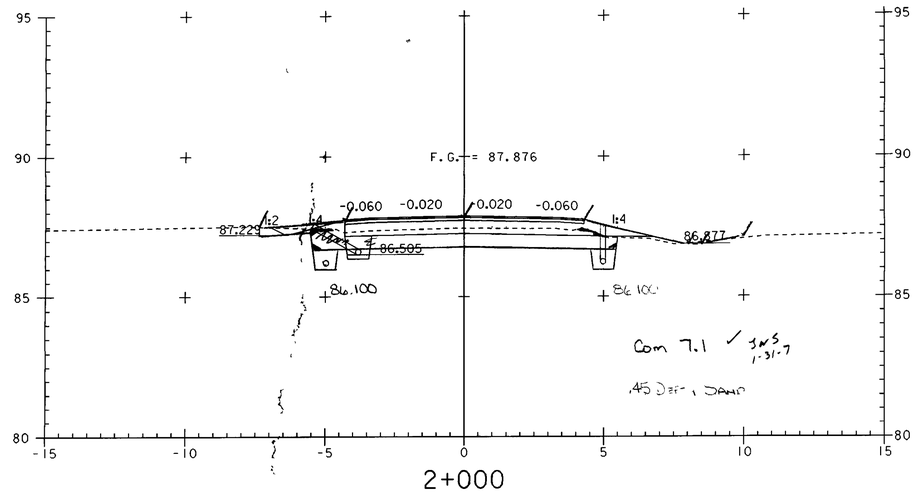

2+000

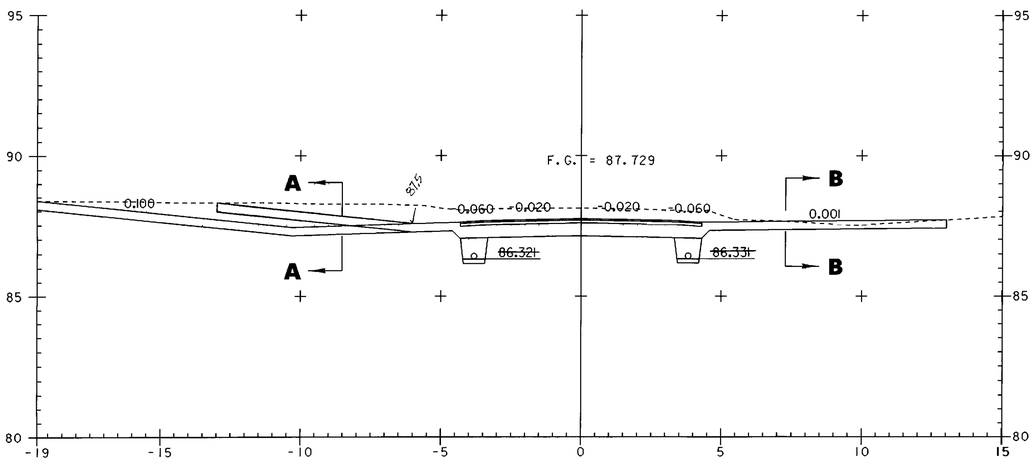

1+973

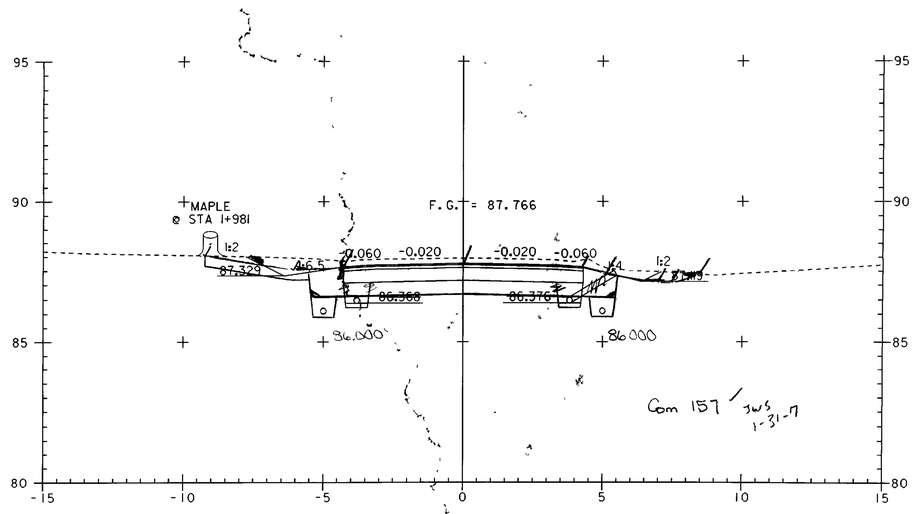

1+980

0 2 4 6 8 10
SCALE IN METERS

PROJECT NAME:	HIGHGATE - FRANKLIN
PROJECT NUMBER:	STP RS 0301(1) SA
FILE NAME: ...85c060\design\dc060x03.dgn	PLOT DATE: 09-MAY-2005
PROJECT LEADER: DELLASANTA	DRAWN BY: SQUAD B
DESIGNED BY: SQUAD B	CHECKED BY: SQUAD B
IFARM FILE NAME: dc060x0316.1	SHEET 302 OF 450

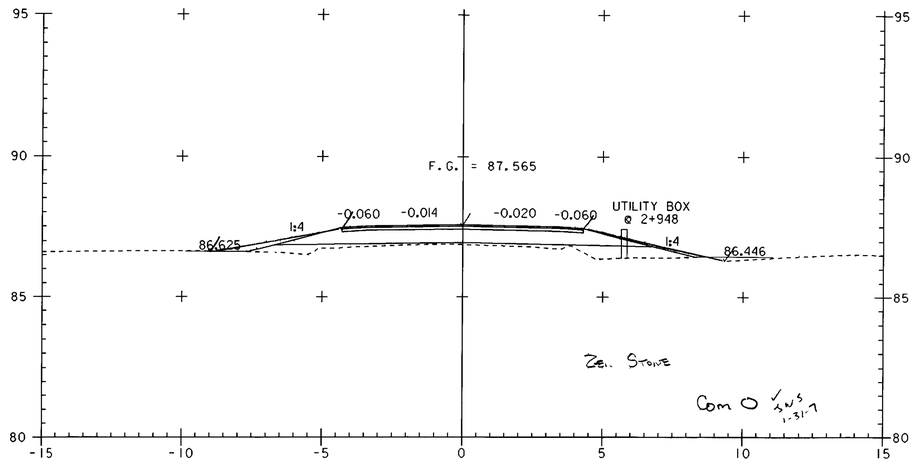

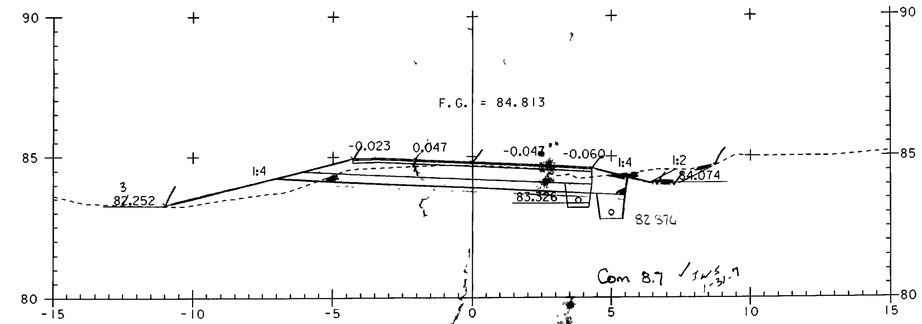

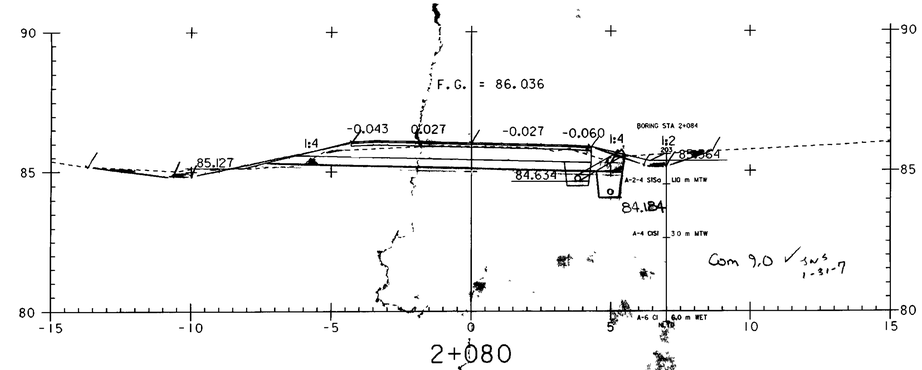

~~STA 2+036.440 END TAPER~~
~~STA 2+034.780 END FULL DEPTH SAND (450MM) BEGIN TAPER~~

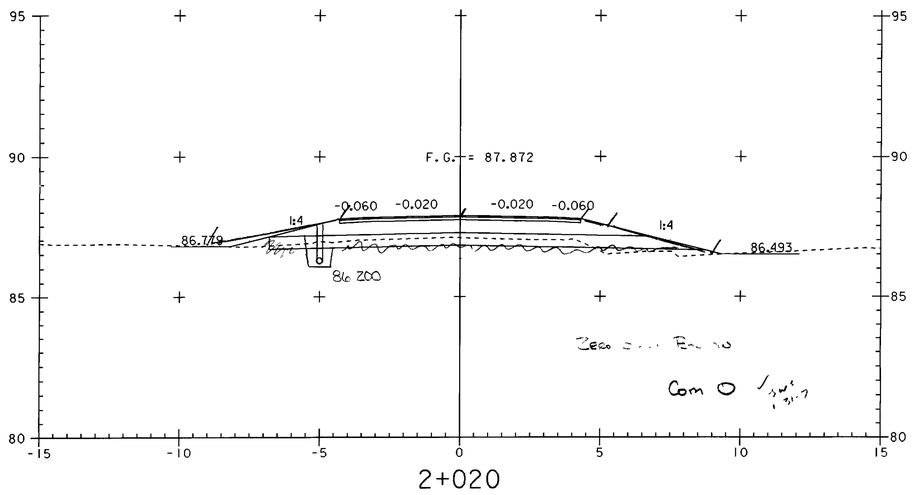

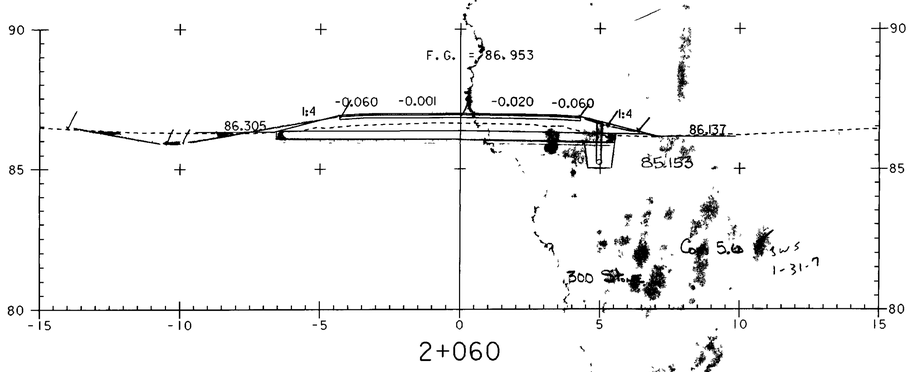

~~STA 2+015.240 END TAPER BEGIN FULL DEPTH SAND (450MM)~~
~~STA 2+013.420 BEGIN TAPER~~

0 2 4 6 8 10
SCALE IN METERS

PROJECT NAME: HIGHGATE - FRANKLIN	
PROJECT NUMBER: STP RS 0301(1) SA	
FILE NAME: ...85c060\design\dc060x04.dgn	PLOT DATE: 09-MAY-2005
PROJECT LEADER: DELLASANTA	DRAWN BY: SQUAD B
DESIGNED BY: SQUAD B	CHECKED BY: SQUAD B
IPARM FILE NAME: dc060x041.1	SHEET 303 OF 450

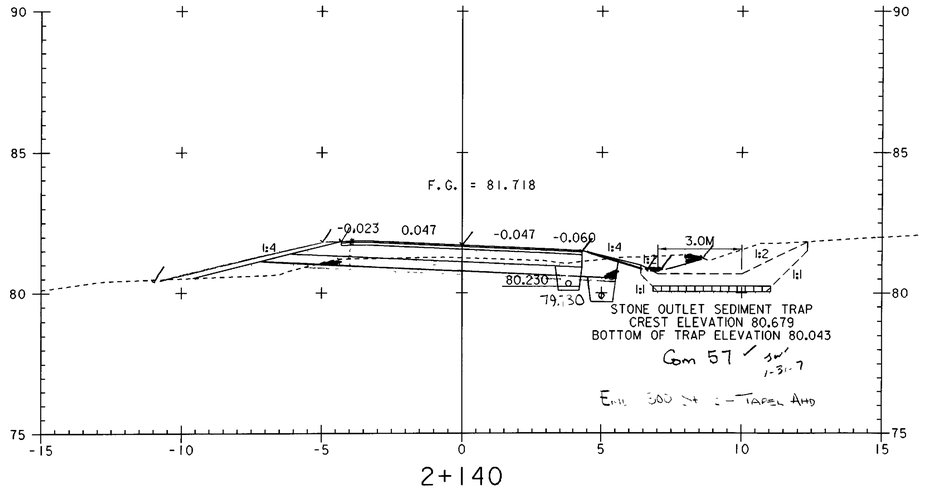

2+140

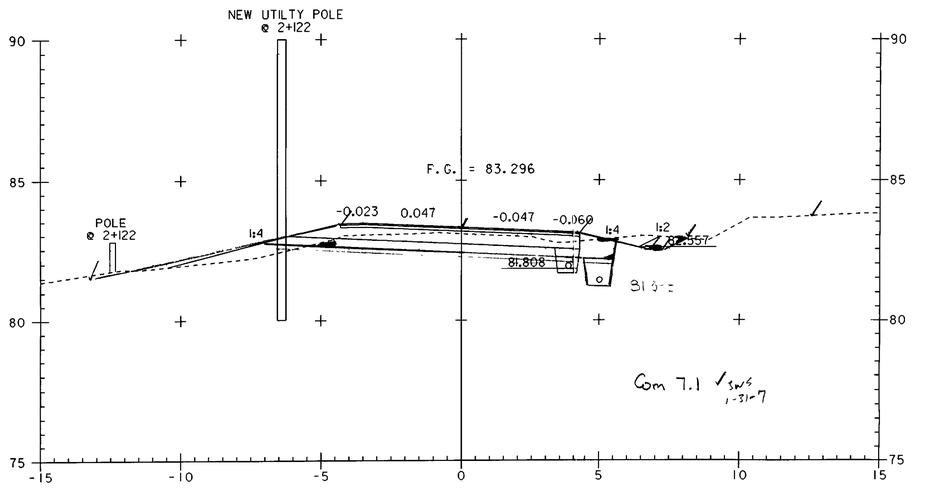

2+120

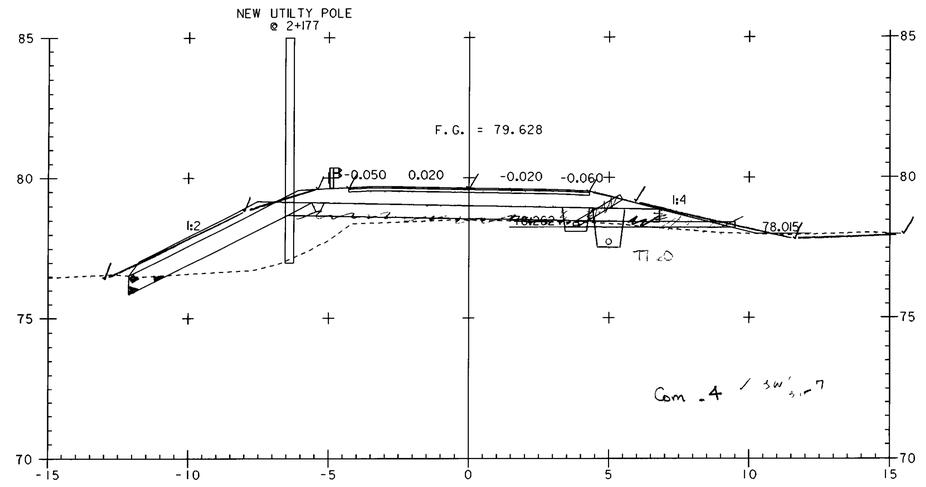

2+180

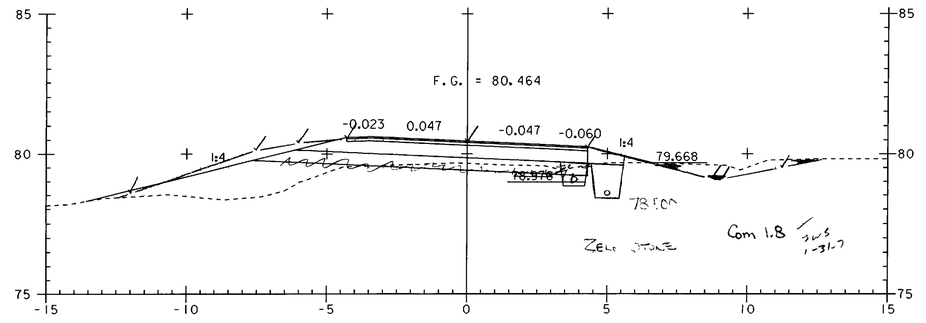

2+160

~~STA 2+156.140 END TAPER BEGIN FULL DEPTH SAND (450MM)~~
~~STA 2+153.800 BEGIN TAPER~~

0 2 4 6 8 10
SCALE IN METERS

PROJECT NAME:	HIGHGATE - FRANKLIN
PROJECT NUMBER:	STP RS 0301(1) SA
FILE NAME: ...85c060\design\dc060x04.dgn	PLOT DATE: 09-MAY-2005
PROJECT LEADER: DELLASANTA	DRAWN BY: SQUAD B
DESIGNED BY: SQUAD B	CHECKED BY: SQUAD B
IPARM FILE NAME: dc060x042.i	SHEET 304 OF 450

C-13

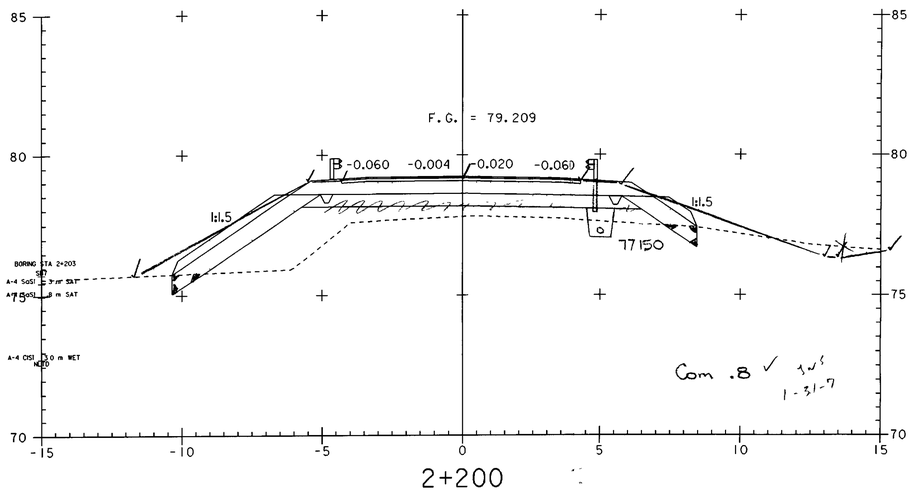

2+200

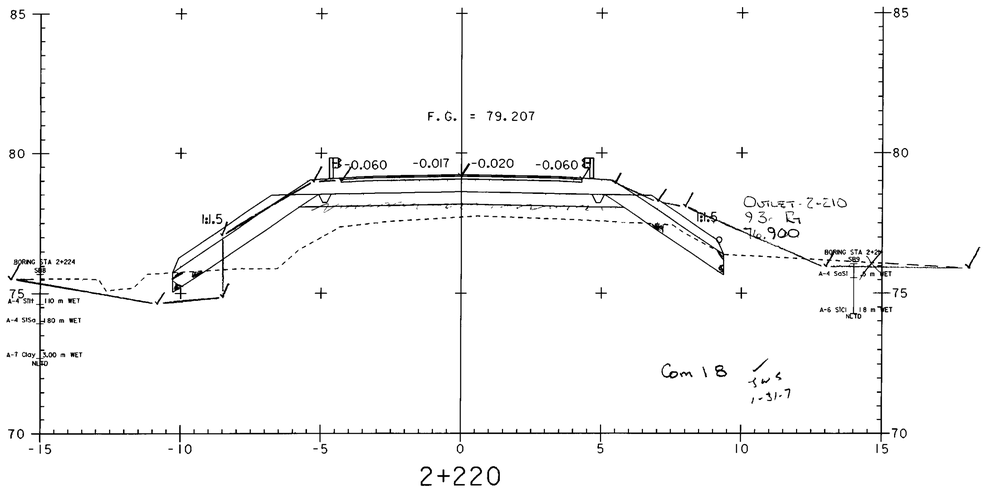

2+220

0 2 4 6 8 10
SCALE IN METERS

PROJECT NAME:	HIGHGATE - FRANKLIN
PROJECT NUMBER:	STP RS 0301(1) SA
FILE NAME: ...85c060\design\dc060x04.dgn	PLOT DATE: 09-MAY-2005
PROJECT LEADER: DELLASANTA	DRAWN BY: SQUAD B
DESIGNED BY: SQUAD B	CHECKED BY: SQUAD B
IPARM FILE NAME: dc060x043.i	SHEET 305 OF 450

~~STA 2+266.929 END TAPER~~
~~STA 2+264.580 END FULL DEPTH SAND (450MM) BEGIN TAPER~~

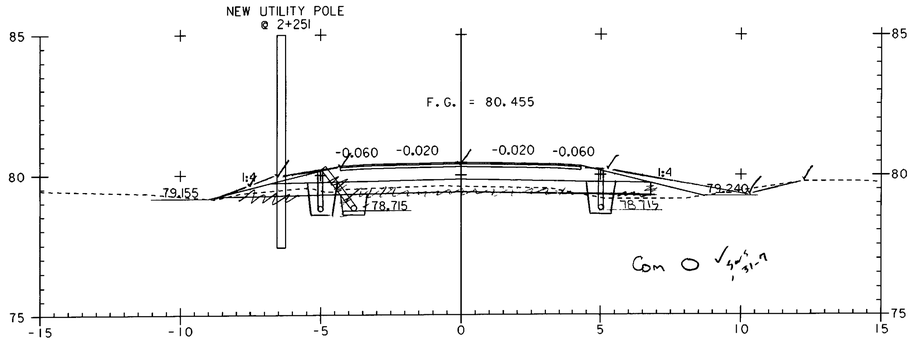

2+260 Zero Stone

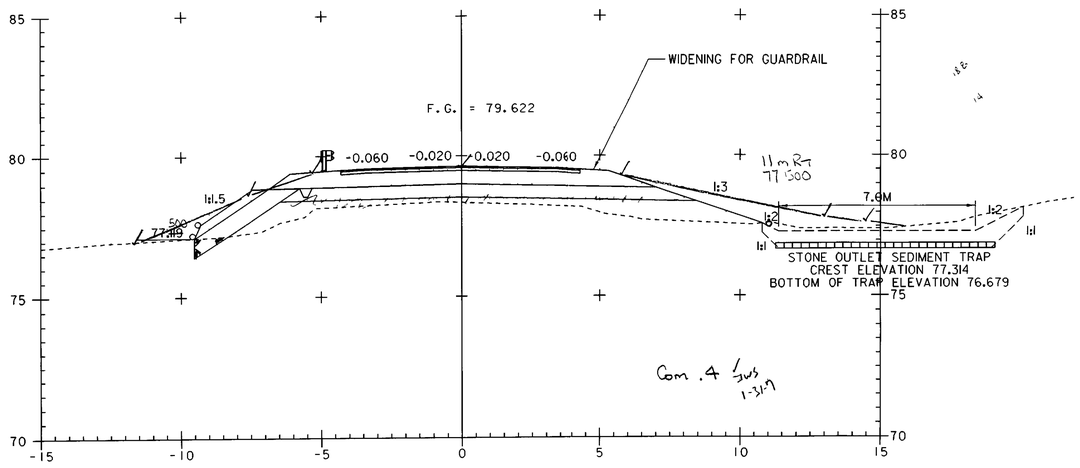

2+240

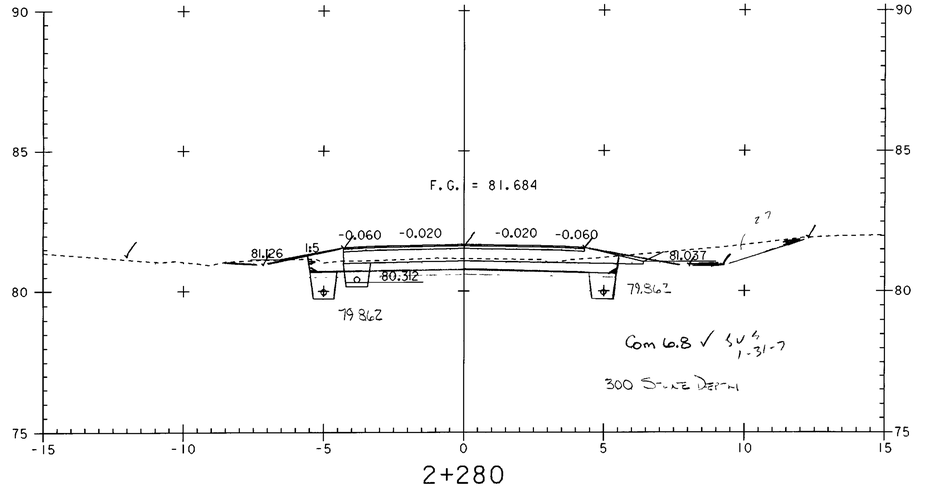

2+280

0 2 4 6 8 10
SCALE IN METERS

PROJECT NAME:	HIGHGATE - FRANKLIN
PROJECT NUMBER:	STP RS 0301(1) SA
FILE NAME: ...85c060\design\dc060x04.dgn	PLOT DATE: 09-MAY-2005
PROJECT LEADER: DELLASANTA	DRAWN BY: SQUAD B
DESIGNED BY: SQUAD B	CHECKED BY: SQUAD B
IPARM FILE NAME: dc060x044.i	SHEET 306 OF 450

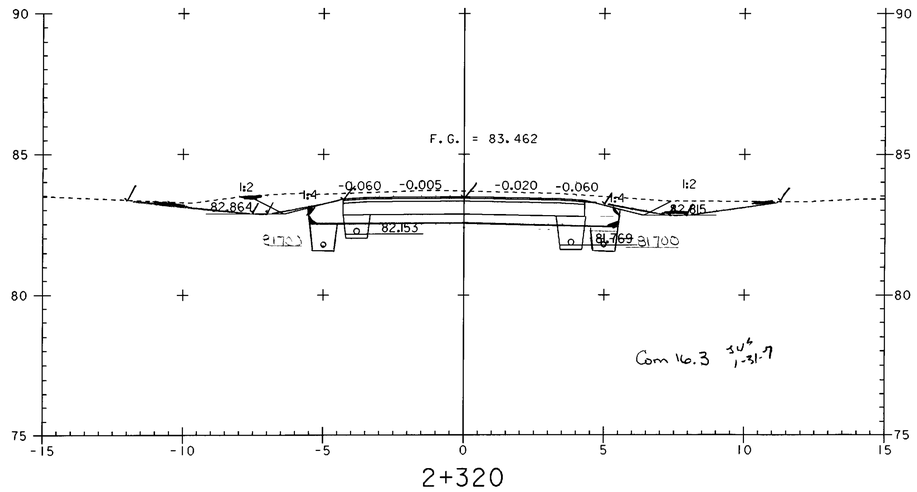

2+320

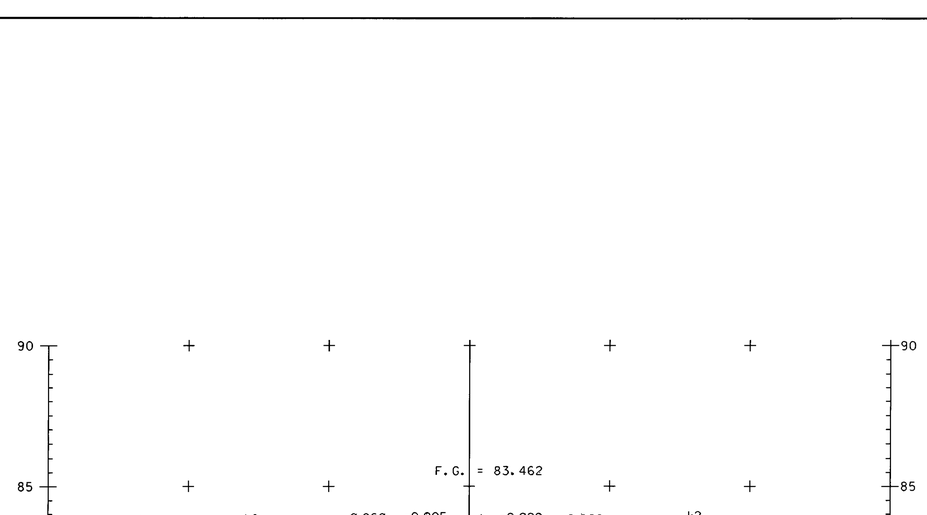

2+300

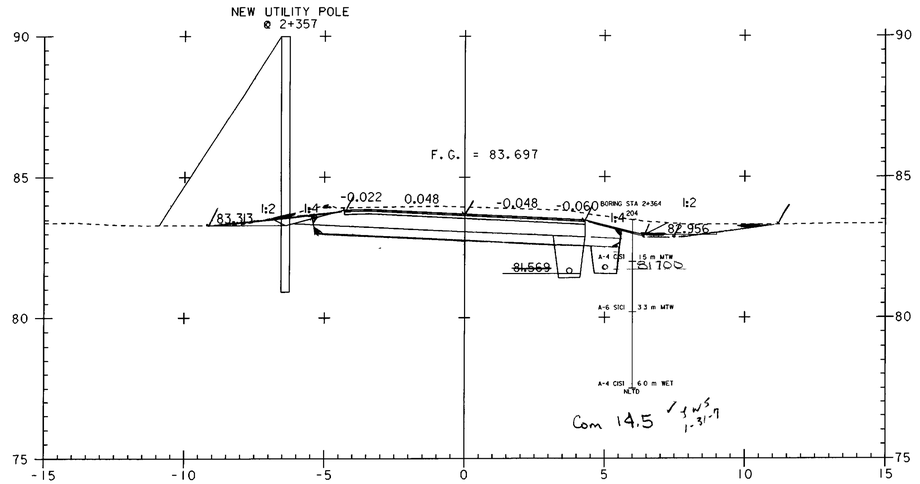

2+360

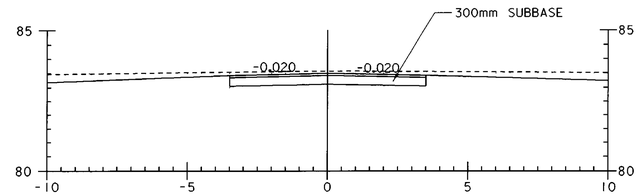

DRIVE AT 2+340 RT
A - A

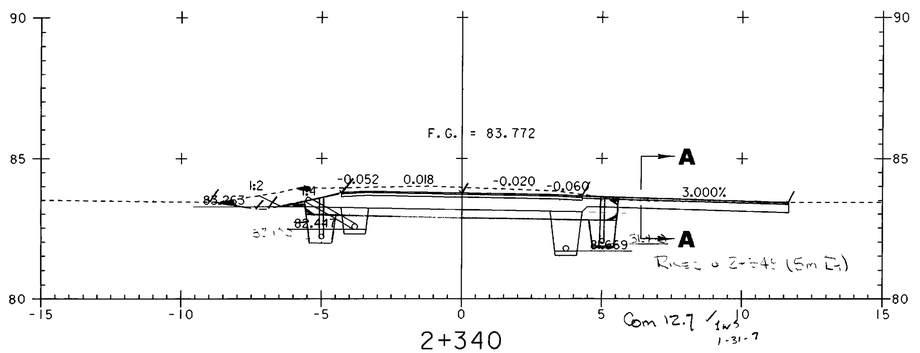

2+340

0 2 4 6 8 10
SCALE IN METERS

PROJECT NAME:	HIGHGATE - FRANKLIN
PROJECT NUMBER:	STP RS 0301(1) SA
FILE NAME: ...85c060\design\dc060x04.dgn	PLOT DATE: 09-MAY-2005
PROJECT LEADER: DELLASANTA	DRAWN BY: SQUAD B
DESIGNED BY: SQUAD B	CHECKED BY: SQUAD B
IPARM FILE NAME: dc060x045.i	SHEET 307 OF 450

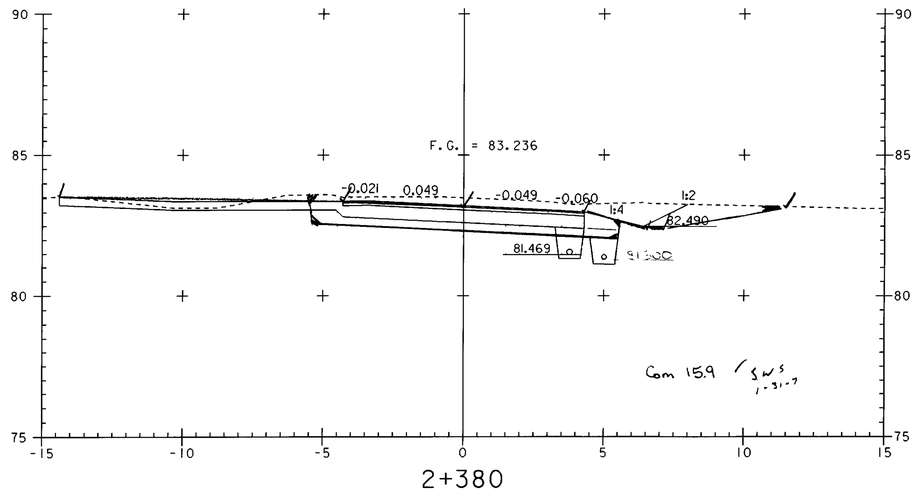

2+380

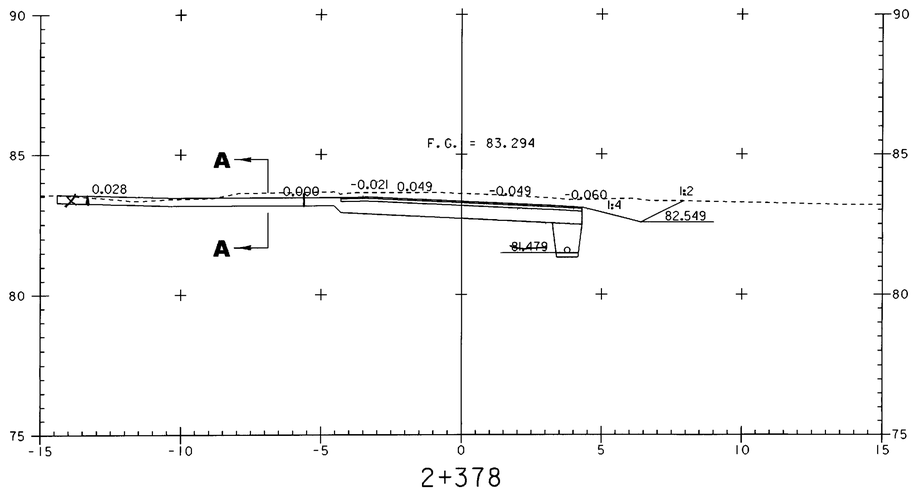

2+378

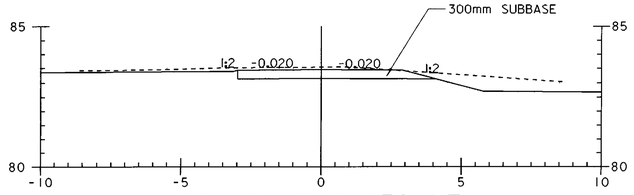

DRIVE AT 2+378 LT
A - A

0 2 4 6 8 10
SCALE IN METERS

PROJECT NAME:	HIGHGATE - FRANKLIN
PROJECT NUMBER:	STP RS 0301(1) SA

FILE NAME: ...85c060\design\dc060x04.dgn		PLOT DATE:	09-MAY-2005
PROJECT LEADER:	DELLASANTA	DRAWN BY:	SQUAD B
DESIGNED BY:	SQUAD B	CHECKED BY:	SQUAD B
IPARM FILE NAME:	dc060x046.i	SHEET	308 OF 450

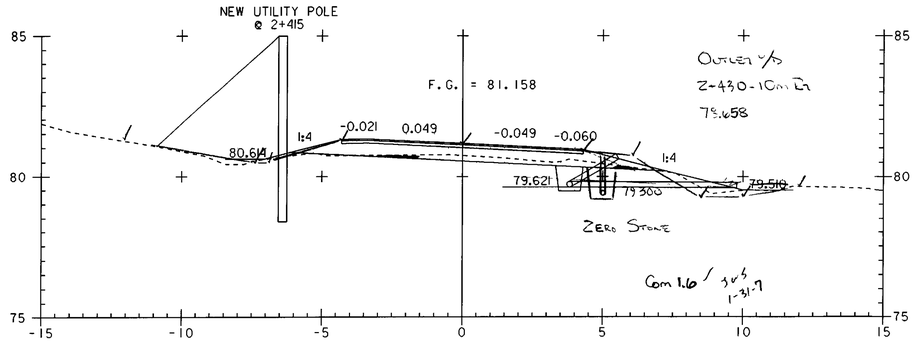

2+420

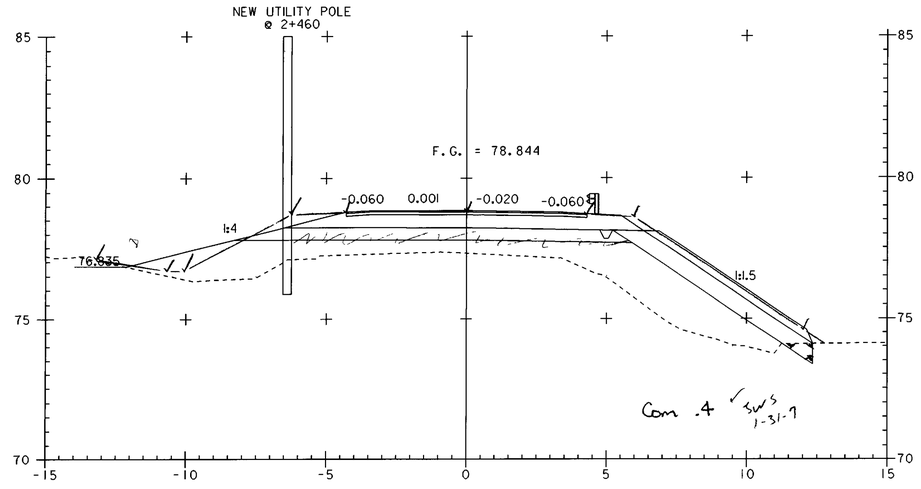

2+460

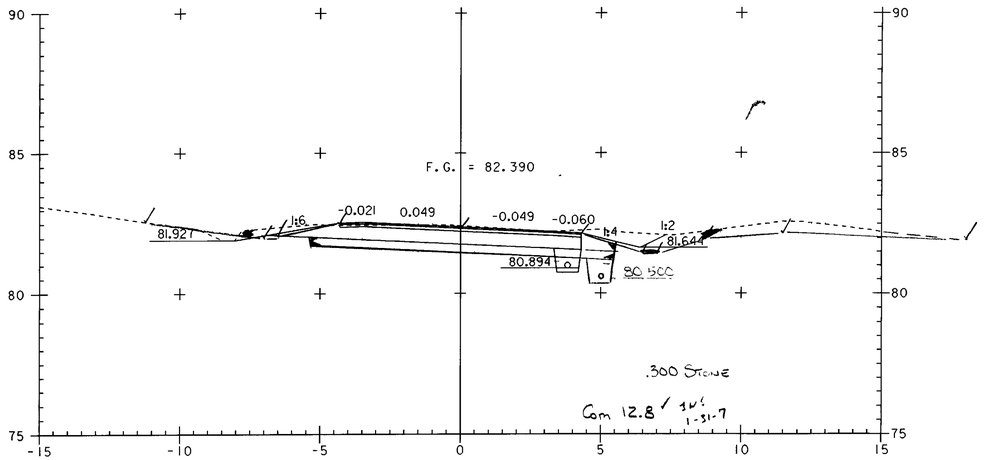

2+400

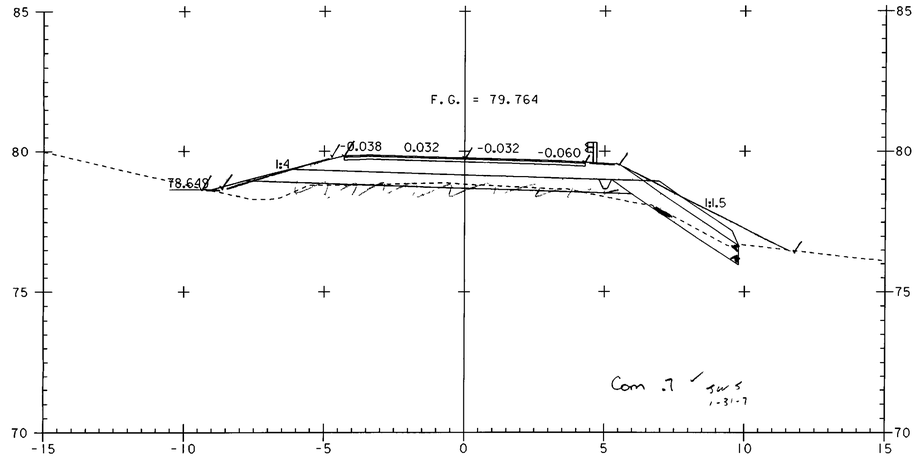

2+440

~~STA 2+434.380 END TAPER BEGIN FULL DEPTH SAND (450MM)~~
~~STA 2+431.900 BEGIN TAPER~~

0 2 4 6 8 10
SCALE IN METERS

PROJECT NAME:	HIGHGATE - FRANKLIN
PROJECT NUMBER:	STP RS 0301(1) SA
FILE NAME: ...85c060\design\dc060x04.dgn	PLOT DATE: 09-MAY-2005
PROJECT LEADER: DELLASANTA	DRAWN BY: SQUAD B
DESIGNED BY: SQUAD B	CHECKED BY: SQUAD B
IPARM FILE NAME: dc060x047.i	SHEET 309 OF 450

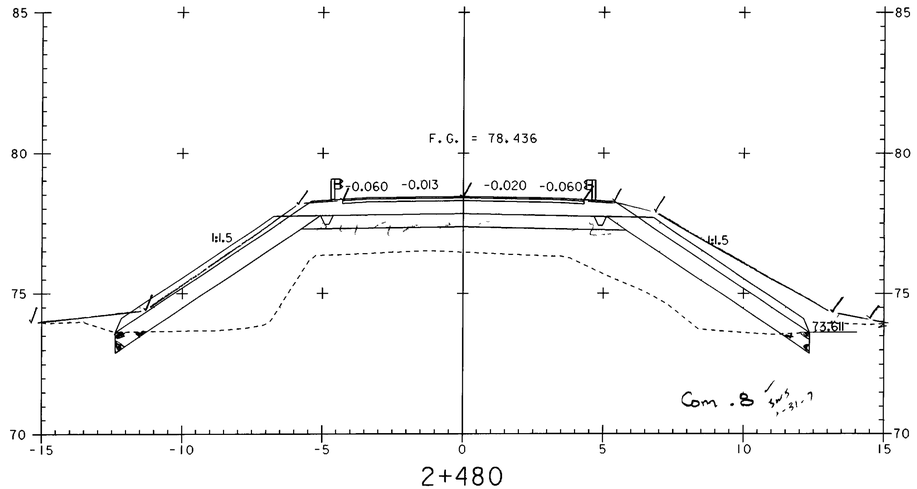

2+480

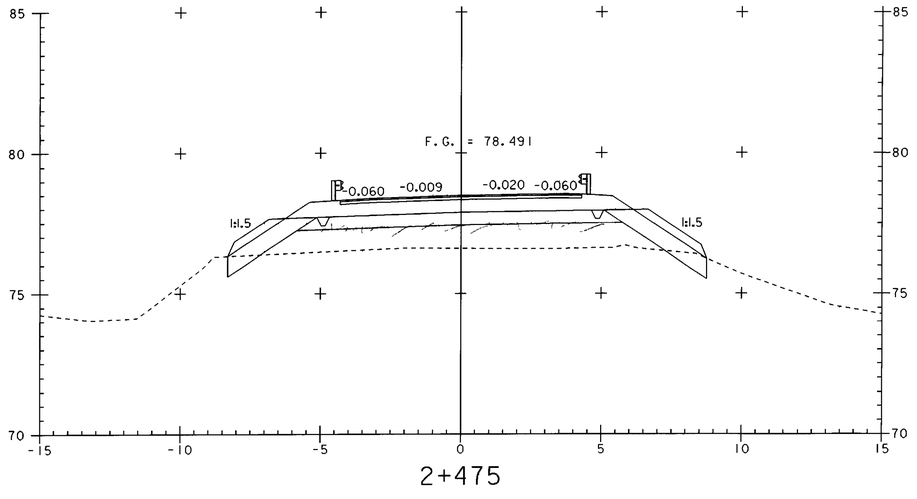

2+475

0 2 4 6 8 10
SCALE IN METERS

PROJECT NAME:	HIGHGATE - FRANKLIN
PROJECT NUMBER:	STP RS 0301(1) SA
FILE NAME: ...85c060\design\dc060x04.dgn	PLOT DATE: 09-MAY-2005
PROJECT LEADER: DELLASANTA	DRAWN BY: SQUAD B
DESIGNED BY: SQUAD B	CHECKED BY: SQUAD B
IPARM FILE NAME: dc060x048.i	SHEET 310 OF 450

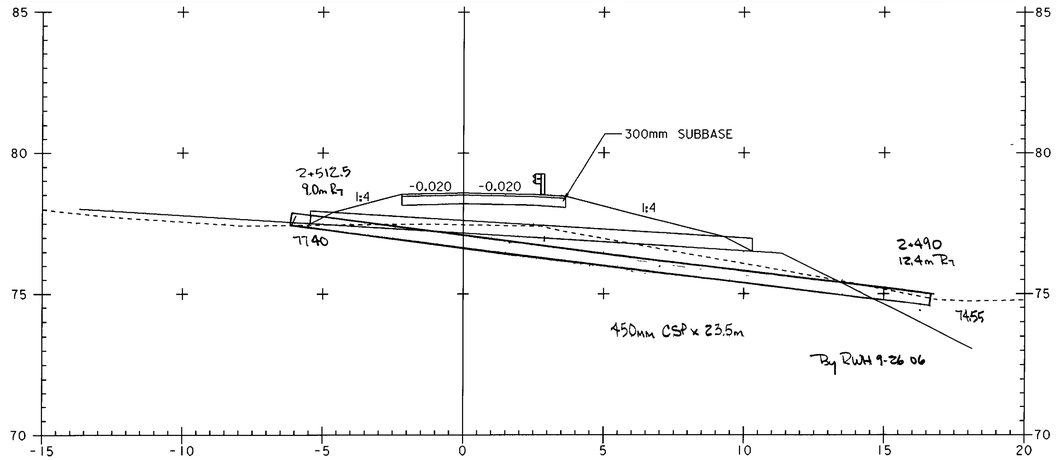

DRIVE AT 2+506 RT
A - A

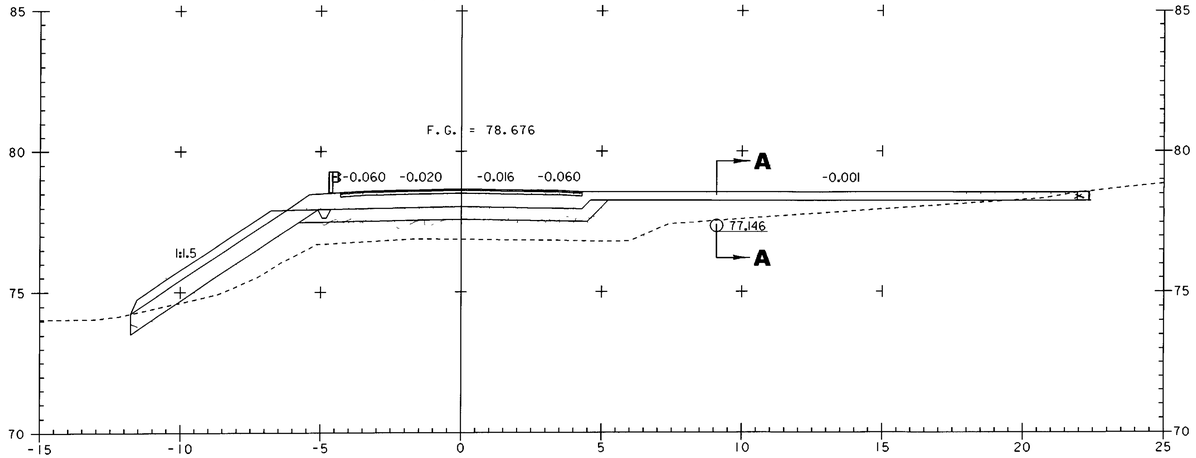

2+506

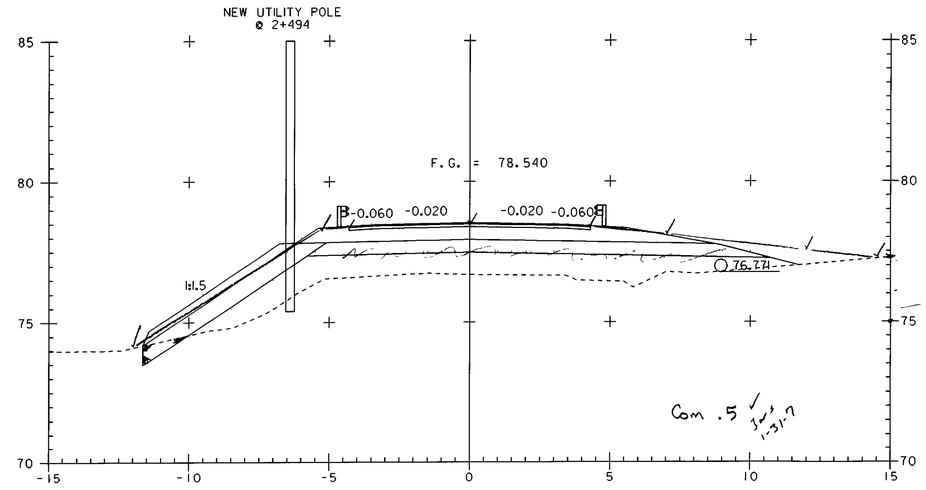

2+500

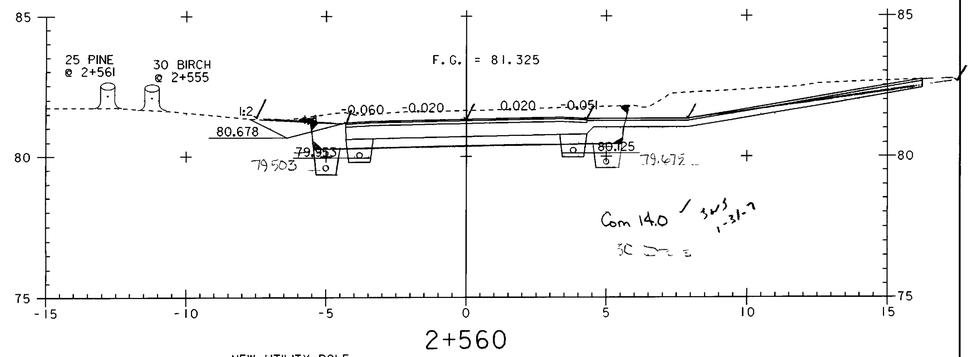

2+560

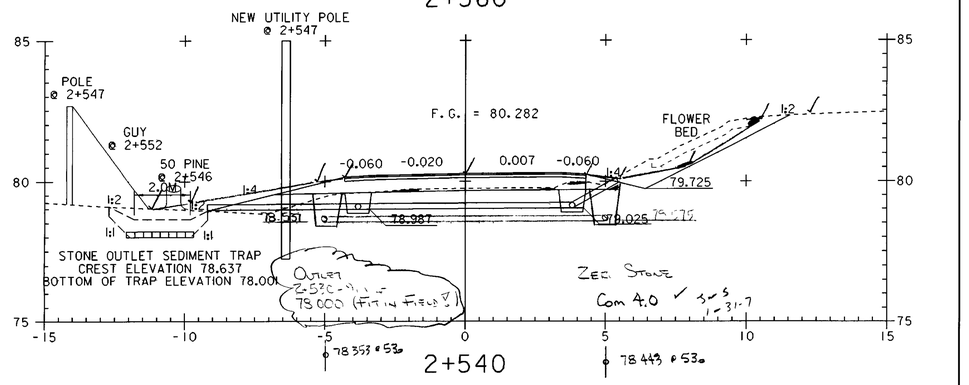

2+540

~~STA 2+537.660 END TAPER~~
~~STA 2+535.220 END FULL DEPTH SAND (450MM) BEGIN TAPER~~

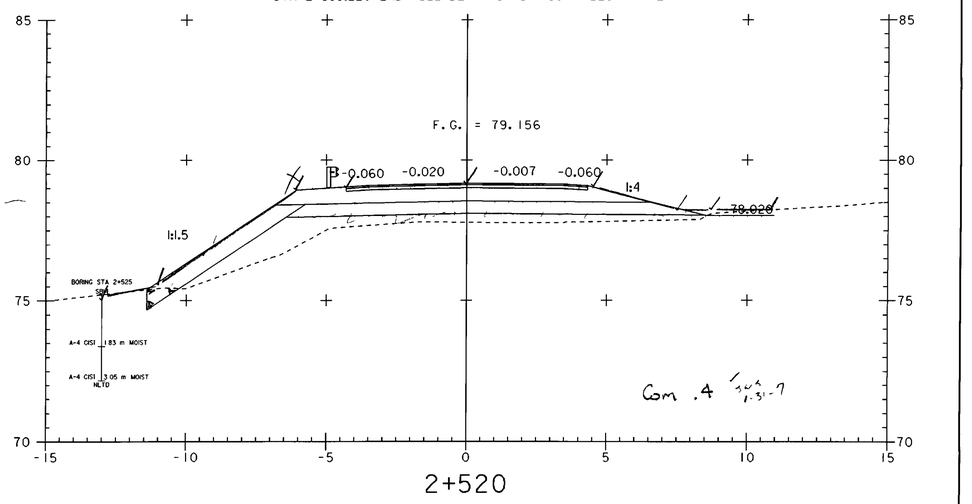

2+520

0 2 4 6 8 10
SCALE IN METERS

PROJECT NAME:	HIGHGATE - FRANKLIN
PROJECT NUMBER:	STP RS 0301(I) SA
FILE NAME: ...85c060\design\dc060x04.dgn	PLOT DATE: 09-MAY-2005
PROJECT LEADER: DELLASANTA	DRAWN BY: SQUAD B
DESIGNED BY: SQUAD B	CHECKED BY: SQUAD B
IPARM FILE NAME: dc060x049.i	SHEET 311 OF 450

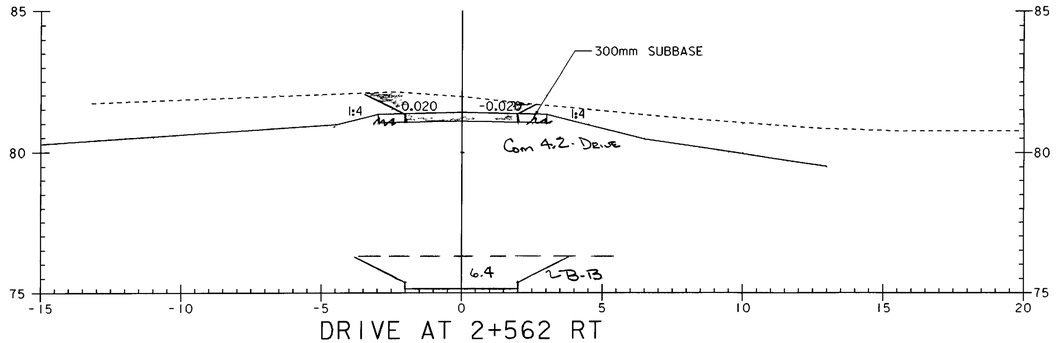

DRIVE AT 2+562 RT
A - A

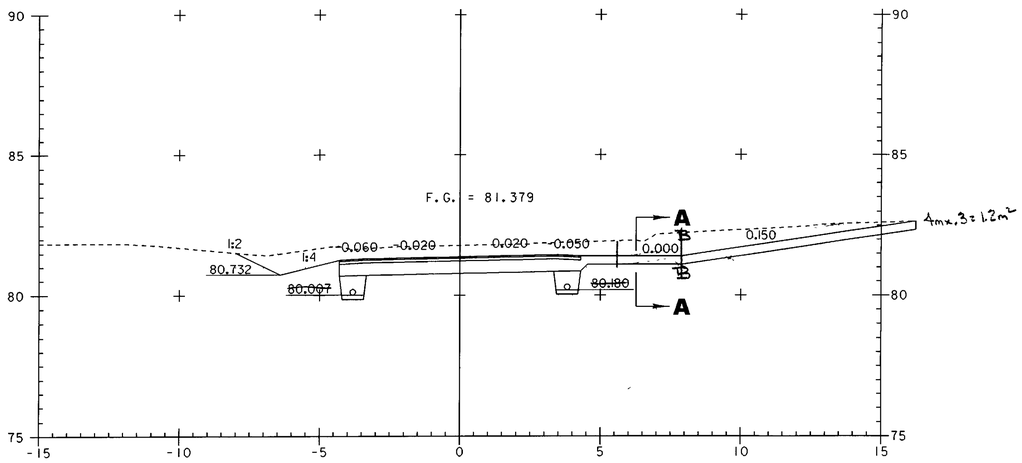

2+562

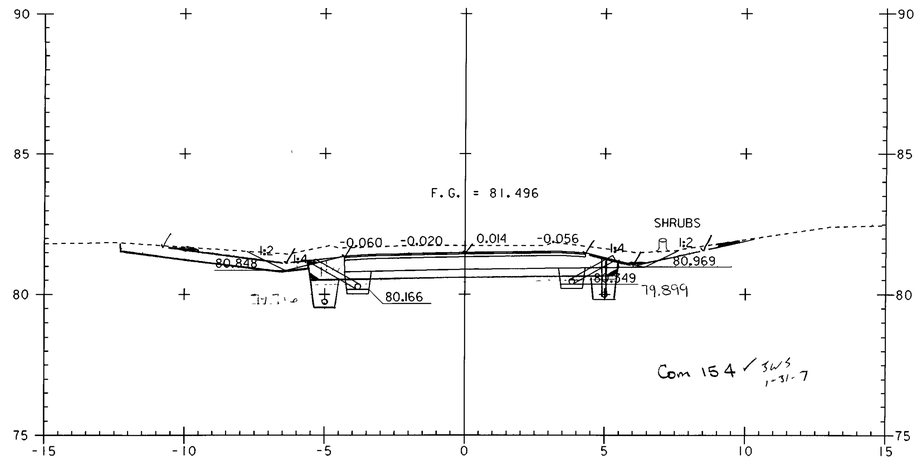

2+580 End Full Depth Stone (300M1.1)
Begin Stone Thzel

0 2 4 6 8 10
SCALE IN METERS

PROJECT NAME:	HIGHGATE - FRANKLIN
PROJECT NUMBER:	STP RS 0301(1) SA
FILE NAME: ...85c060\design\dc060x04.dgn	PLOT DATE: 09-MAY-2005
PROJECT LEADER: DELLASANTA	DRAWN BY: SQUAD B
DESIGNED BY: SQUAD B	CHECKED BY: SQUAD B
IPARM FILE NAME: dc060x0410.i	SHEET 312 OF 450

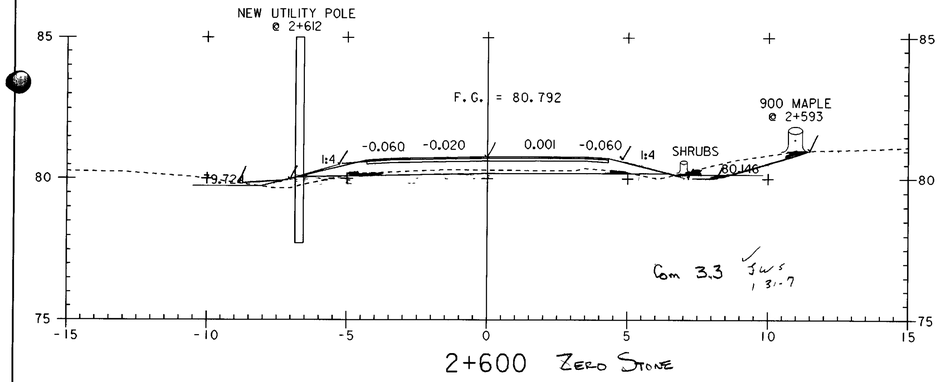

2+600 Zero Stone

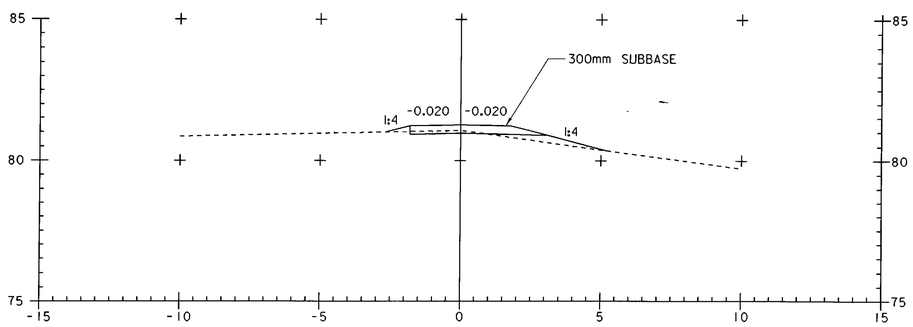

DRIVE AT 2+590 LT
A - A

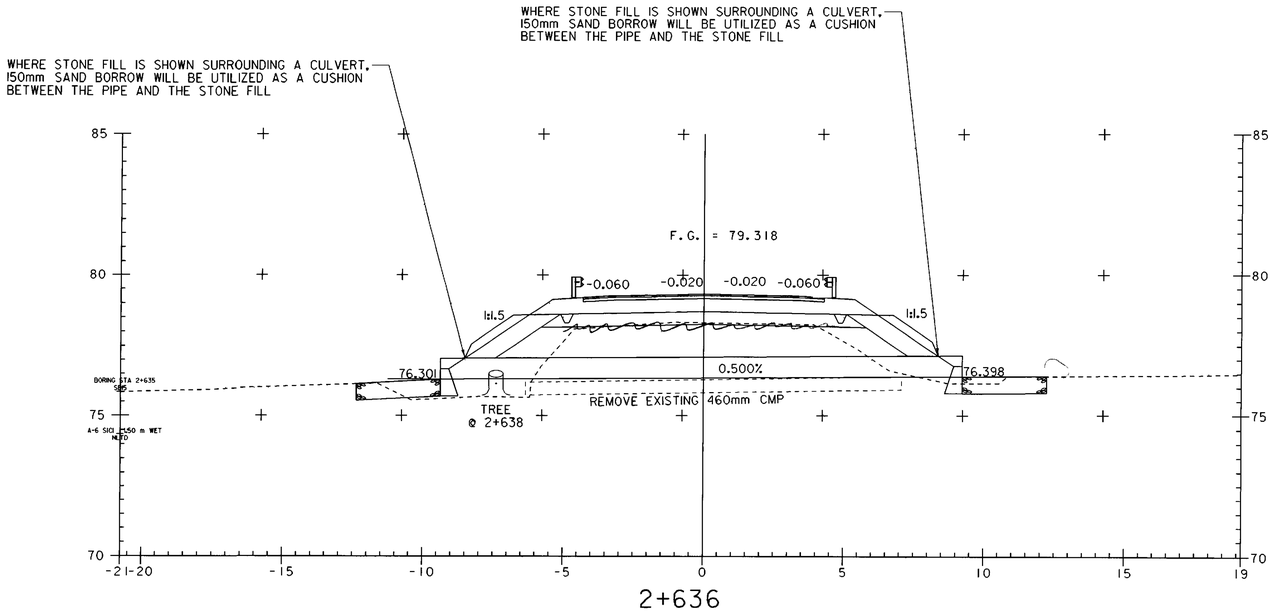

2+636

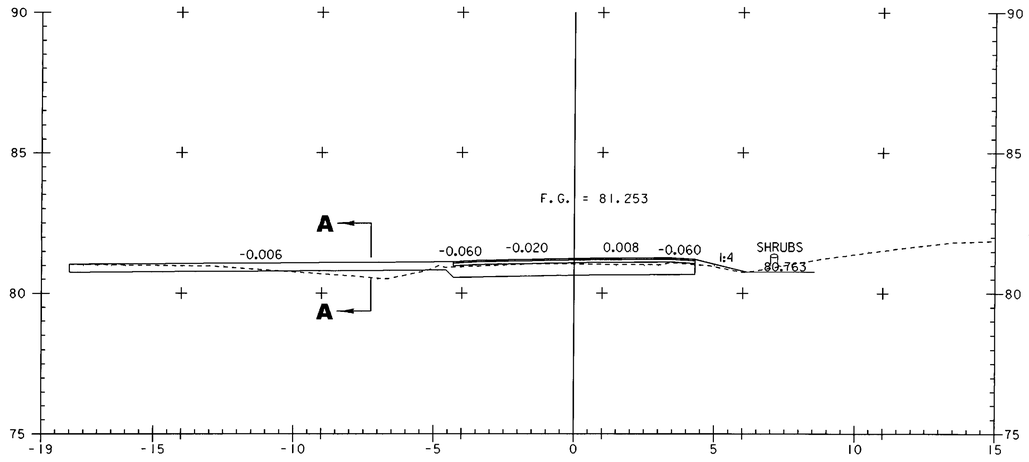

2+590

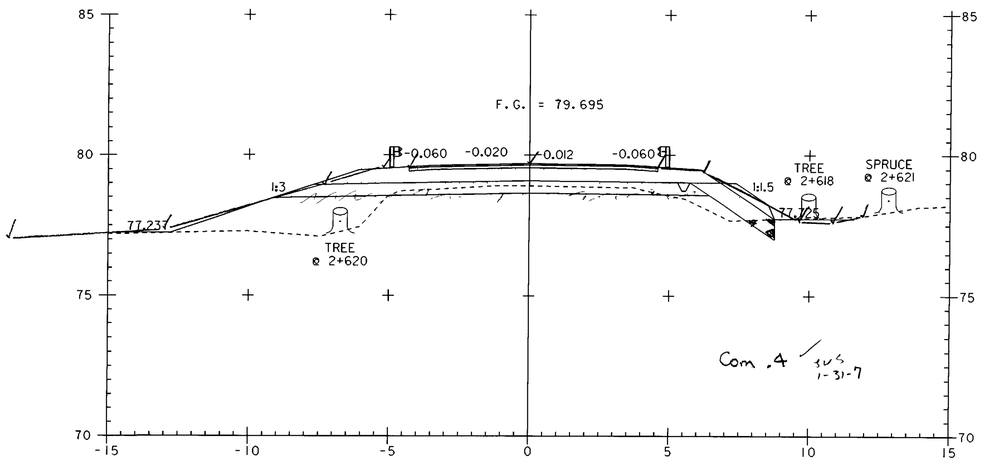

2+620

STA 2+~~617.220~~ END TAPER ~~BEGIN FULL DEPTH SAND (450MM)~~
~~STA 2+615.000 BEGIN TAPER~~

0 2 4 6 8 10
SCALE IN METERS

PROJECT NAME:	HIGHGATE - FRANKLIN
PROJECT NUMBER:	STP RS 0301(1) SA
FILE NAME: ...85c060\design\dc060x04.dgn	PLOT DATE: 09-MAY-2005
PROJECT LEADER: DELLASANTA	DRAWN BY: SQUAD B
DESIGNED BY: SQUAD B	CHECKED BY: SQUAD B
IPARM FILE NAME: dc060x0411.1	SHEET 313 OF 450

VAOT Metric

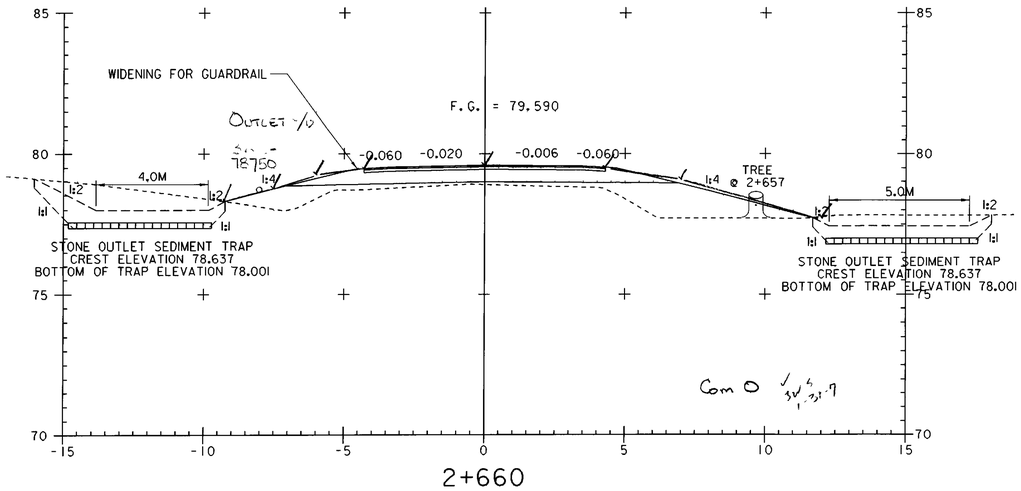

2+660

~~STA 2+657.690 END TAPER~~
~~STA 2+655.660 END FULL DEPTH SAND (450MM) BEGIN TAPER~~

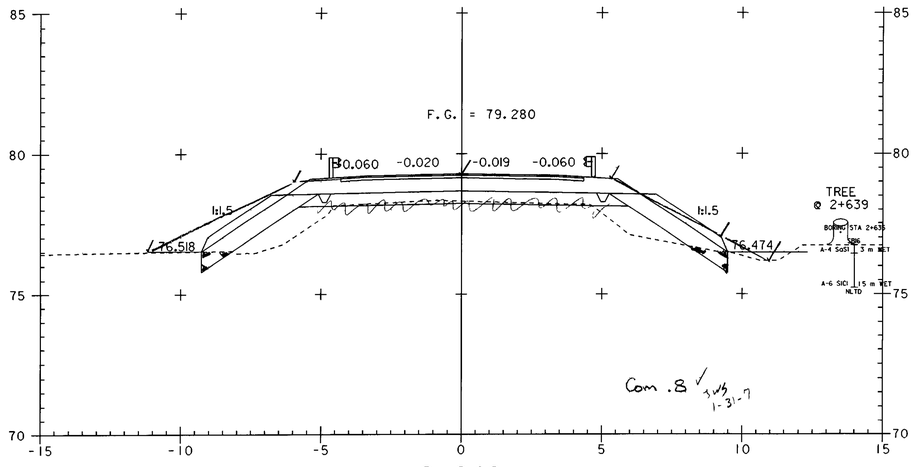

2+640

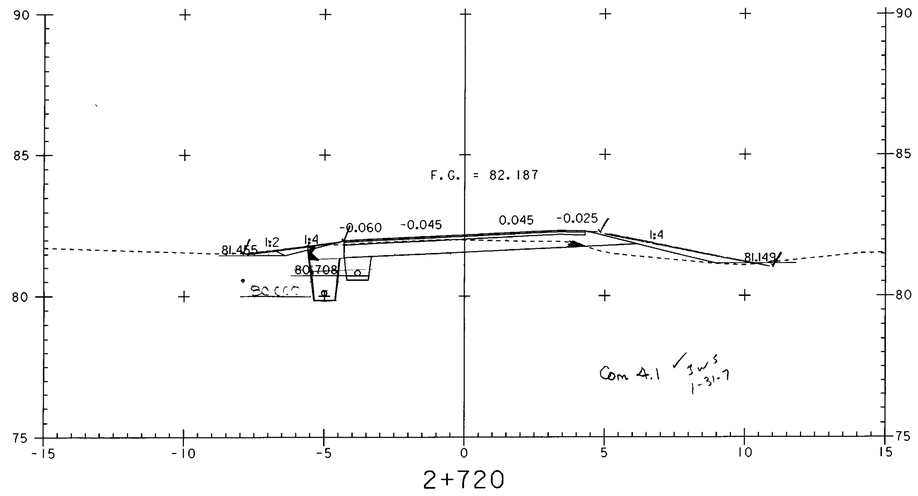

2+720

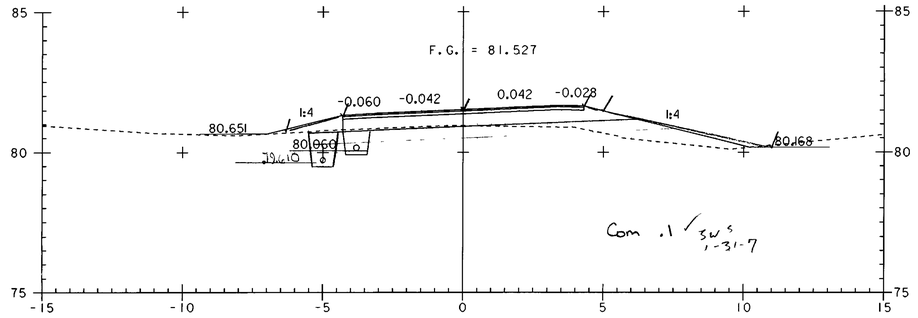

2+700

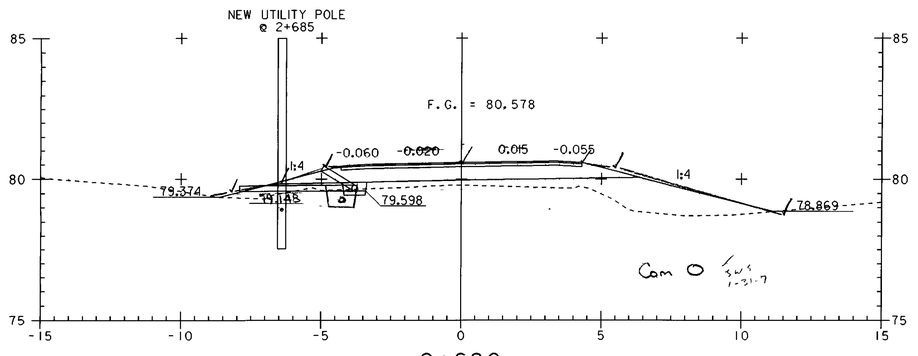

2+680

0 2 4 6 8 10
SCALE IN METERS

PROJECT NAME:	HIGHGATE - FRANKLIN
PROJECT NUMBER:	STP RS 0301(1) SA

FILE NAME: ...85c060\design\dc060x04.dgn		PLOT DATE:	09-MAY-2005
PROJECT LEADER:	DELLASANTA	DRAWN BY:	SQUAD B
DESIGNED BY:	SQUAD B	CHECKED BY:	SQUAD B
IPARM FILE NAME:	dc060x0412.1	SHEET	314 OF 450

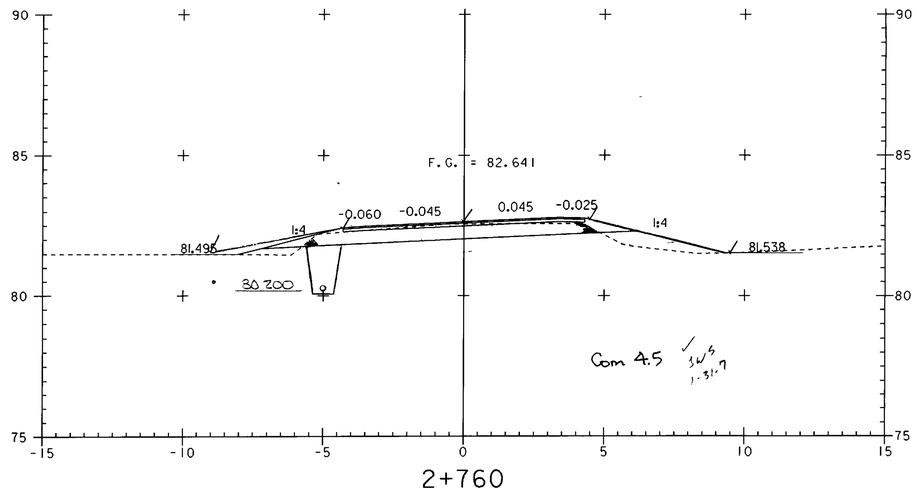

2+760

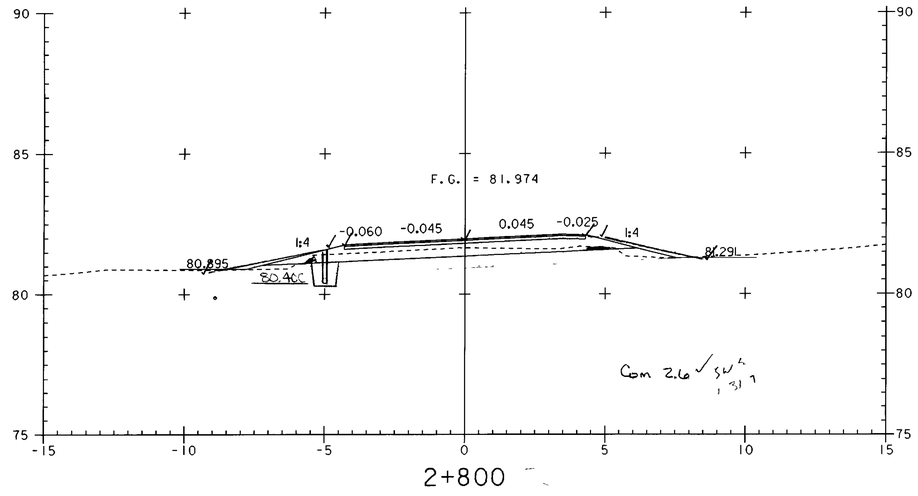

2+800

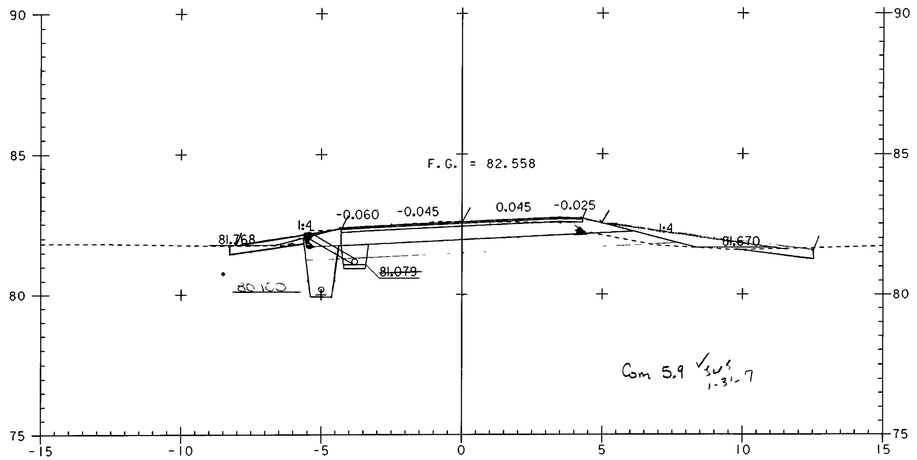

2+740

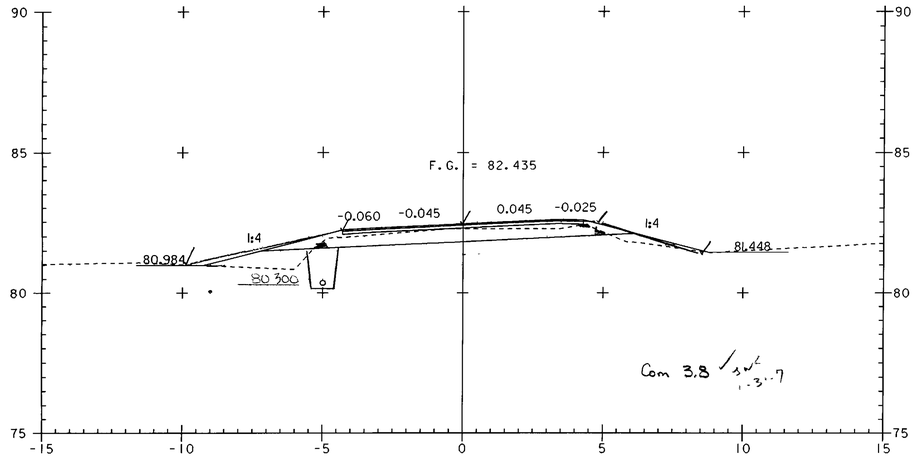

2+780

0 2 4 6 8 10
SCALE IN METERS

PROJECT NAME:	HIGHGATE - FRANKLIN
PROJECT NUMBER:	STP RS 0301(1) SA
FILE NAME: ...85c060\design\dc060x04.dgn	PLOT DATE: 09-MAY-2005
PROJECT LEADER: DELLASANTA	DRAWN BY: SQUAD B
DESIGNED BY: SQUAD B	CHECKED BY: SQUAD B
IPARM FILE NAME: dc060x0413.1	SHEET 315 OF 450

WHERE STONE FILL IS SHOWN SURROUNDING A CULVERT, 150mm SAND BORROW WILL BE UTILIZED AS A CUSHION BETWEEN THE PIPE AND THE STONE FILL

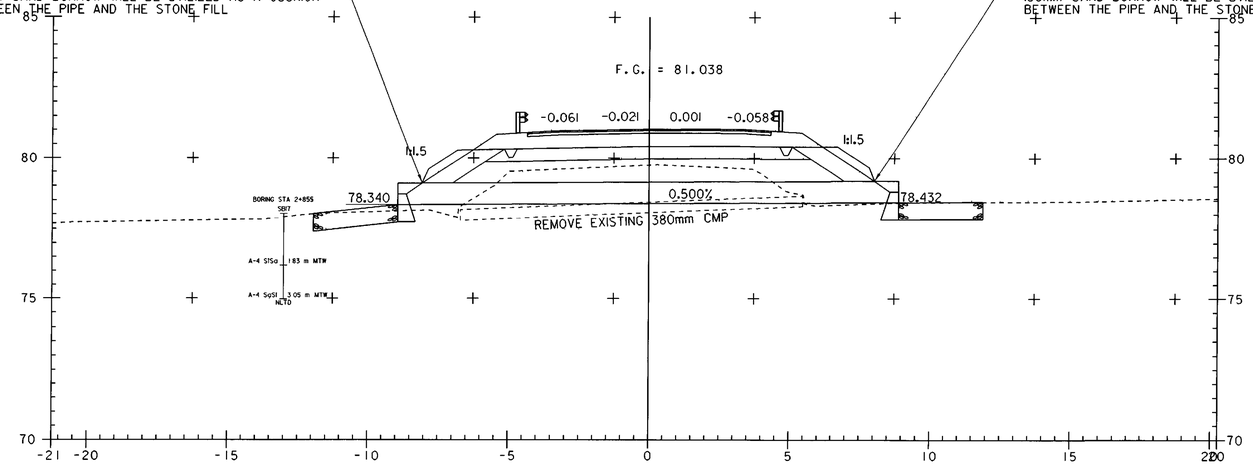

2+847
ASKEW 82°-04'-47" LT

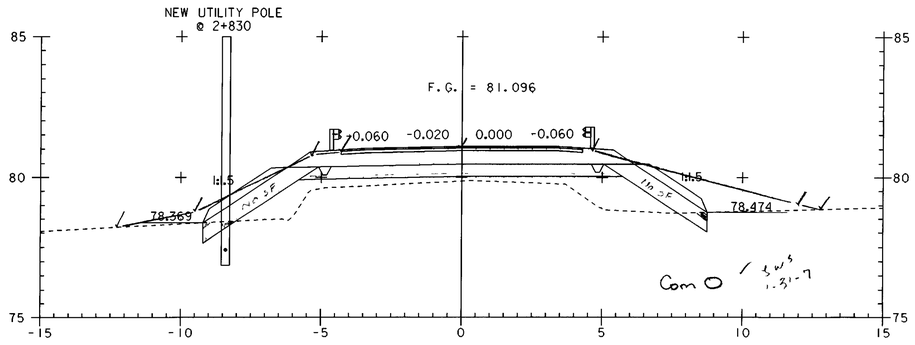

2+840

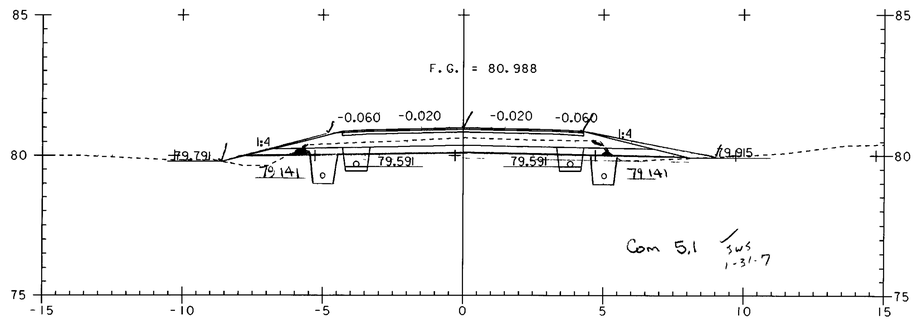

2+880 BEGIN FULL DEPTH STONE (300MM)

~~STA 2+822.000 END TAPER BEGIN FULL DEPTH SAND (450MM)~~
~~STA 2+820.010 BEGIN TAPER~~

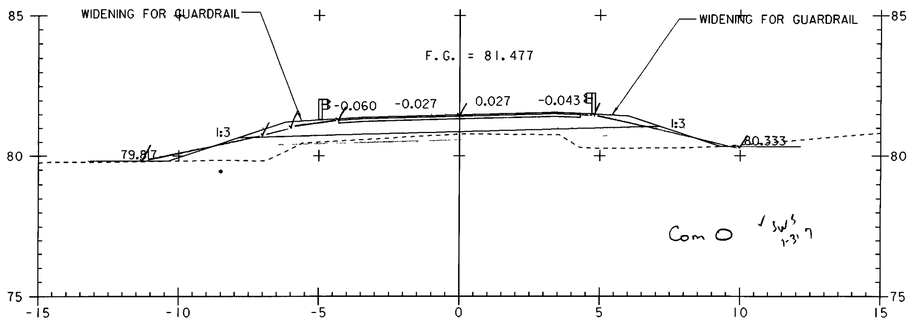

2+820

~~STA 2+870.860 END TAPER~~
~~STA 2+869.040 END FULL DEPTH SAND (450MM) BEGIN TAPER~~

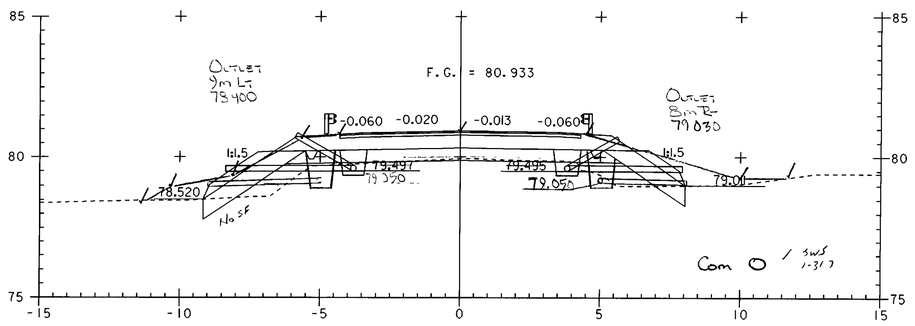

2+860 ZERO STONE

0 2 4 6 8 10
SCALE IN METERS

PROJECT NAME:	HIGHGATE - FRANKLIN
PROJECT NUMBER:	STP RS 0301(1) SA
FILE NAME: ...85c060\design\dc060x04.dgn	PLOT DATE: 09-MAY-2005
PROJECT LEADER: DELLASANTA	DRAWN BY: SQUAD B
DESIGNED BY: SQUAD B	CHECKED BY: SQUAD B
IPARM FILE NAME: dc060x0414.i	SHEET 316 OF 450

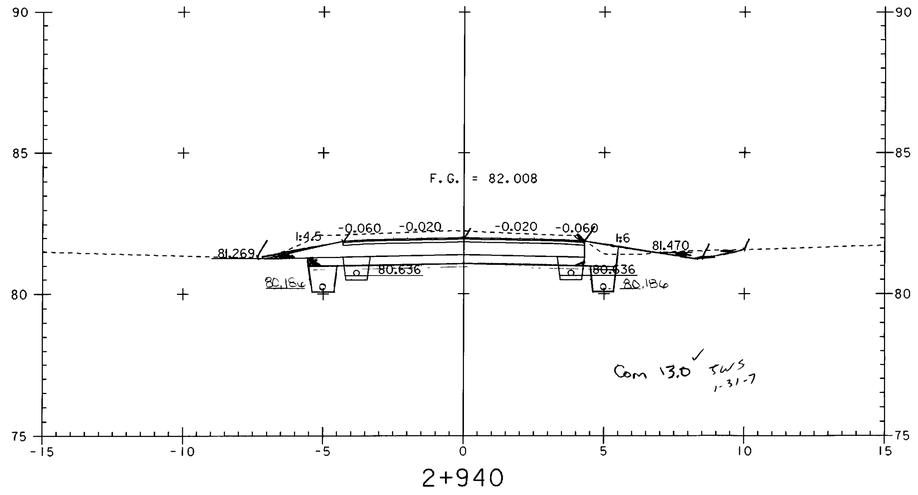

2+940

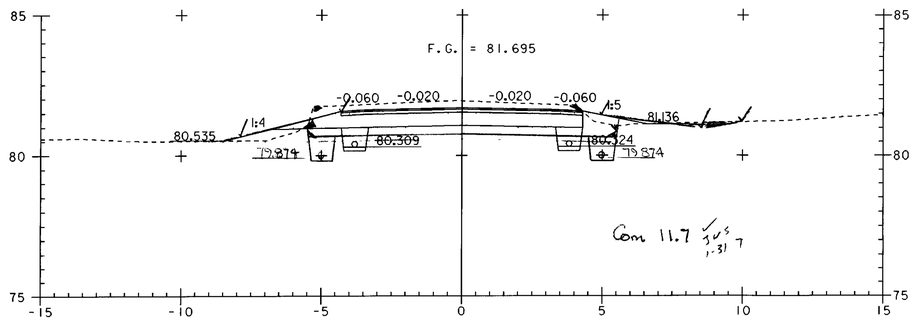

2+920

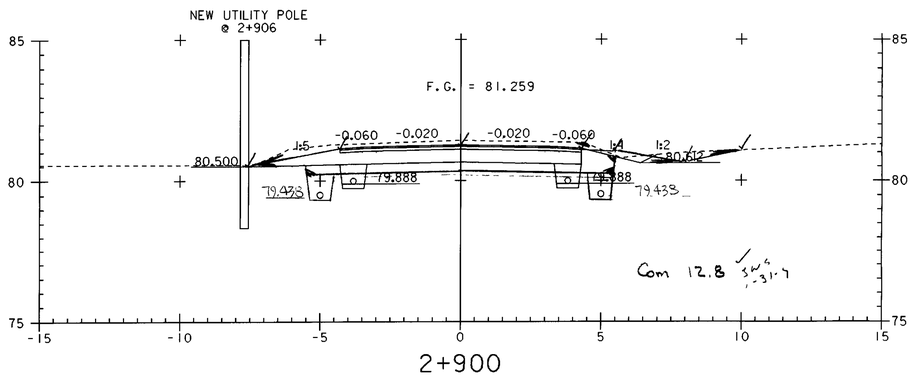

2+900

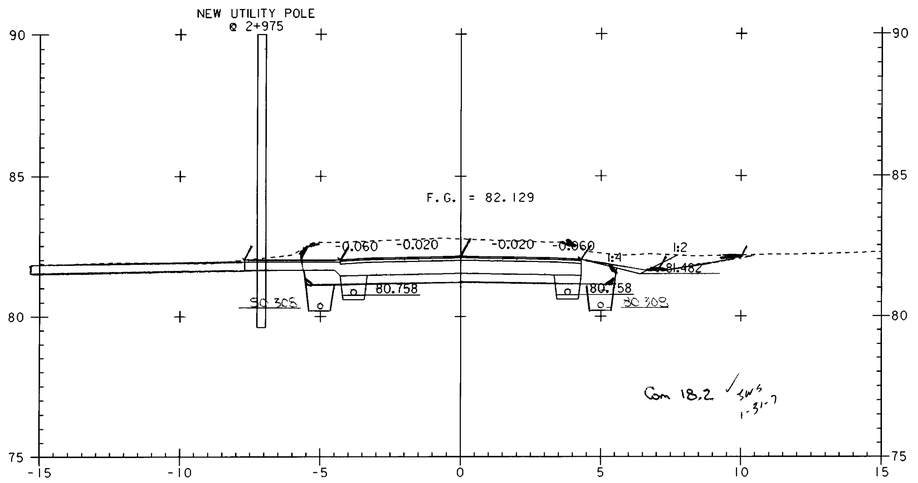

2+980

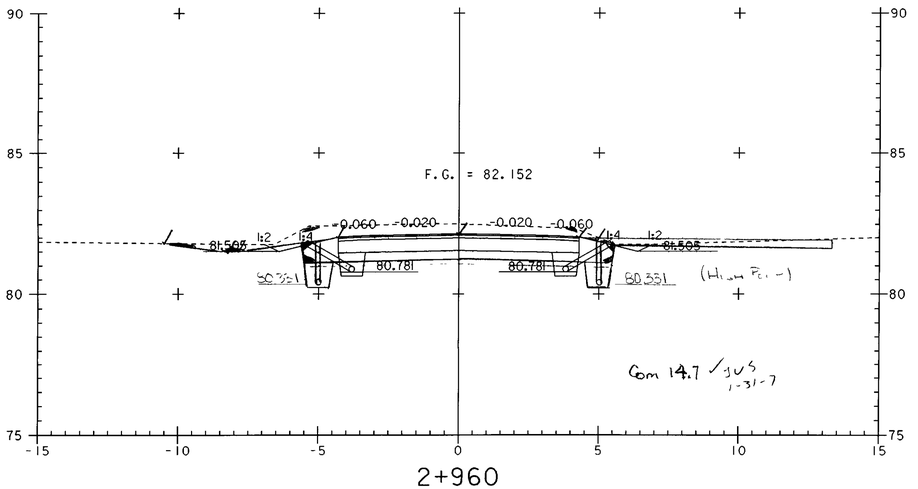

2+960

0 2 4 6 8 10
SCALE IN METERS

PROJECT NAME:	HIGHGATE - FRANKLIN
PROJECT NUMBER:	STP RS 0301(I) SA
FILE NAME: ...85c060\design\dc060x04.dgn	PLOT DATE: 09-MAY-2005
PROJECT LEADER: DELLASANTA	DRAWN BY: SQUAD B
DESIGNED BY: SQUAD B	CHECKED BY: SQUAD B
IPARM FILE NAME: dc060x0415.i	SHEET 317 OF 450

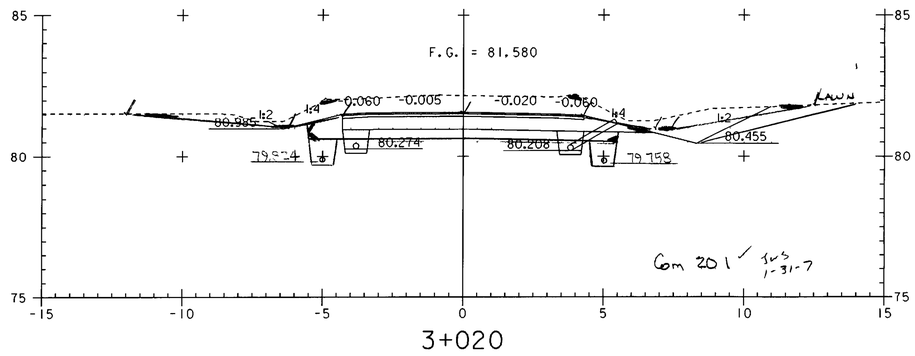

3+020

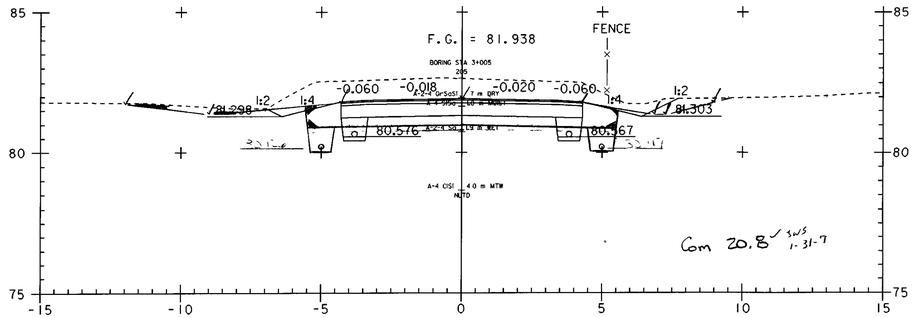

3+000

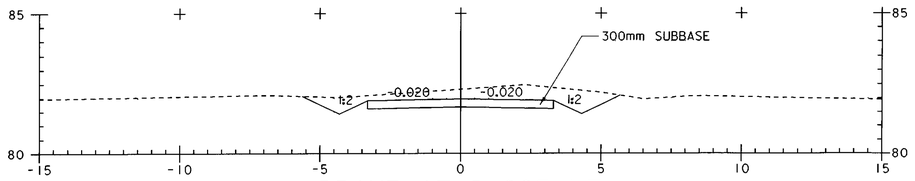

DRIVE AT 2+983 LT
A - A

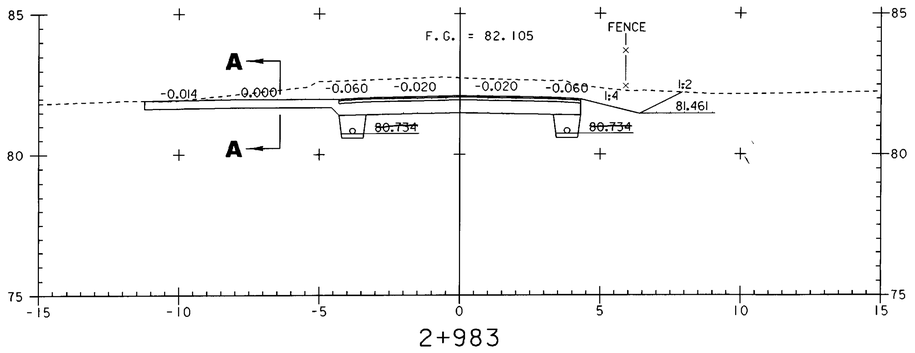

2+983

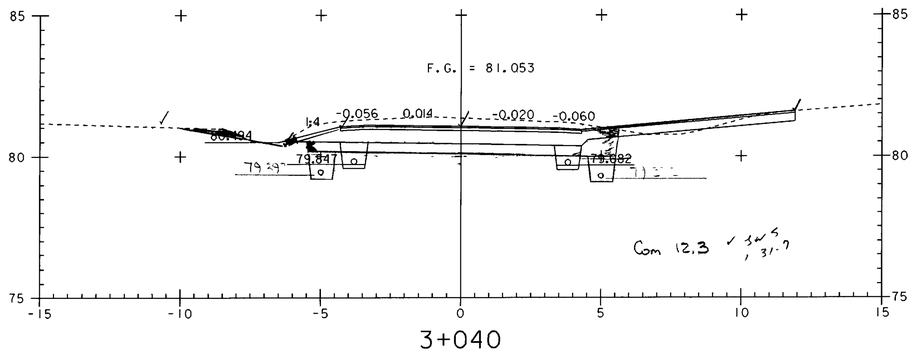

3+040

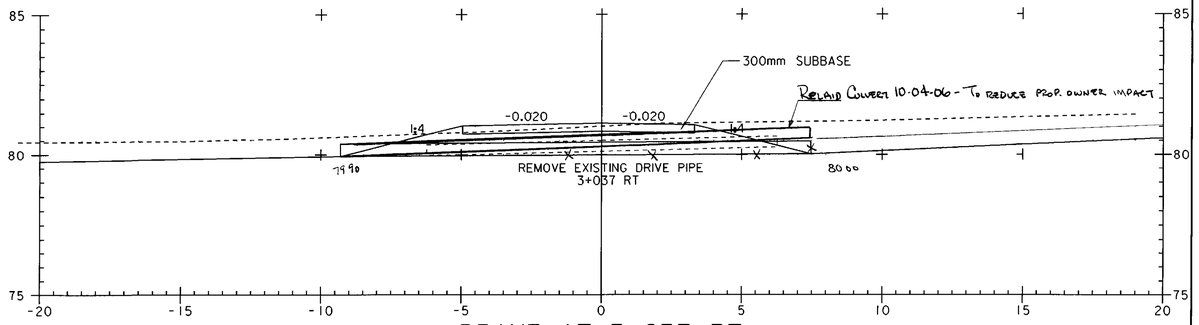

DRIVE AT 3+037 RT
A - A

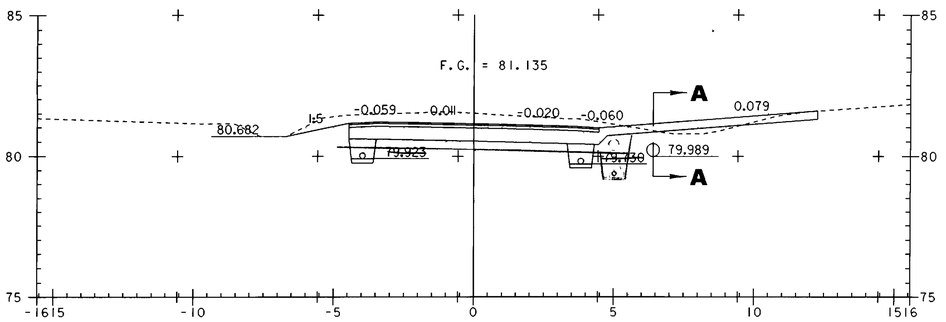

3+037

0 2 4 6 8 10
SCALE IN METERS

PROJECT NAME:	HIGHGATE - FRANKLIN
PROJECT NUMBER:	STP RS 0301(1) SA

FILE NAME: ...85c060\design\dc060x04.dgn		PLOT DATE:	09-MAY-2005
PROJECT LEADER:	DELLASANTA	DRAWN BY:	SQUAD B
DESIGNED BY:	SQUAD B	CHECKED BY:	SQUAD B
IPARM FILE NAME:	dc060x0416.i	SHEET	318 OF 450

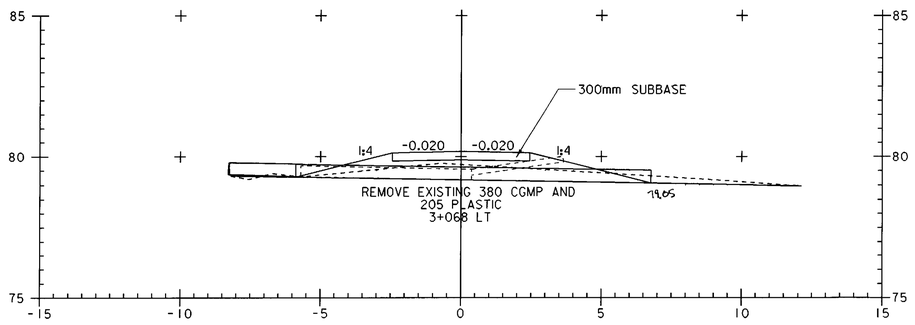

DRIVE AT 3+068 LT
A - A

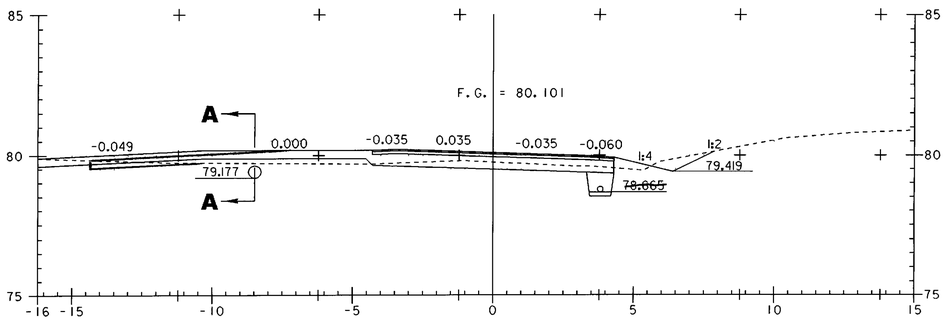

3+068

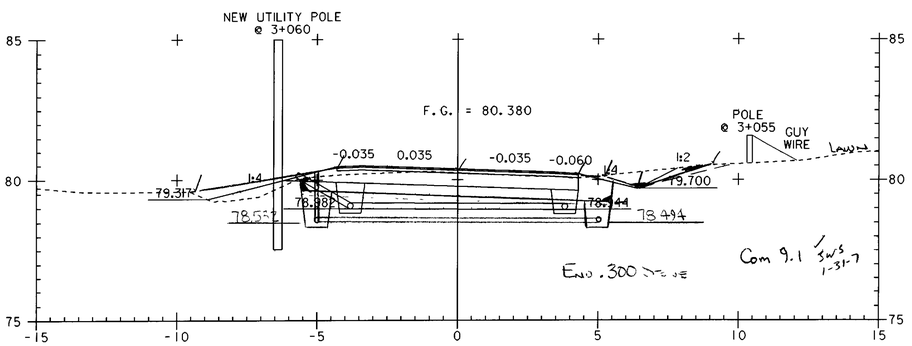

3+060

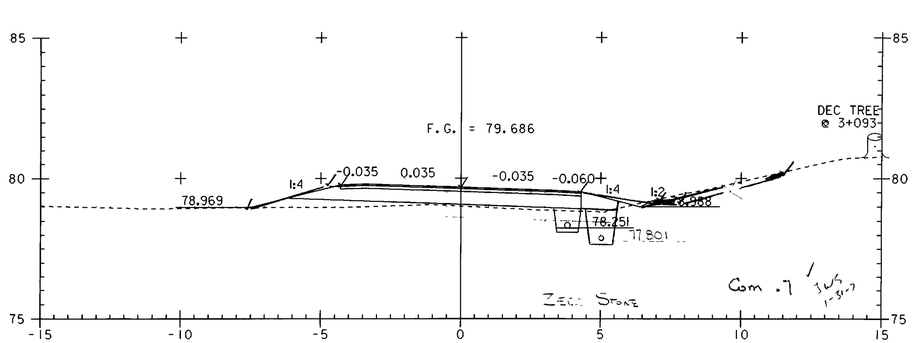

3+080

0 2 4 6 8 10
SCALE IN METERS

PROJECT NAME:	HIGHGATE - FRANKLIN
PROJECT NUMBER:	STP RS 0301(1) SA
FILE NAME: ...85c060\design\dc060x04.dgn	PLOT DATE: 09-MAY-2005
PROJECT LEADER: DELLASANTA	DRAWN BY: SQUAD B
DESIGNED BY: SQUAD B	CHECKED BY: SQUAD B
IPARM FILE NAME: dc060x0417.i	SHEET 319 OF 450

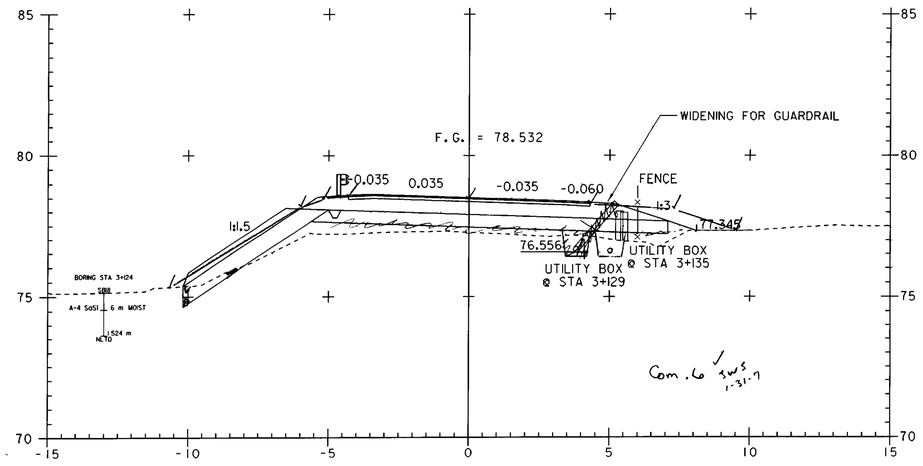

3+120 End Taper

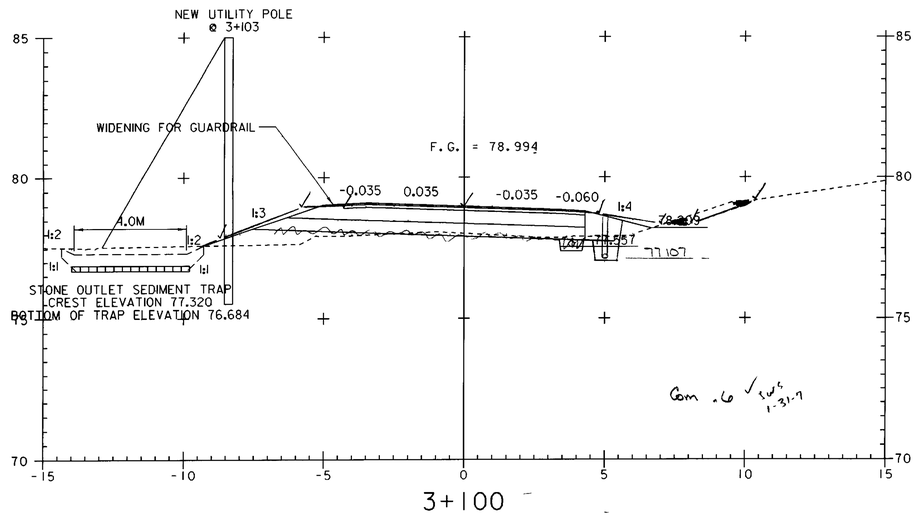

3+100

~~STA 3+083.040 END TAPER BEGIN FULL DEPTH SAND (450MM)~~
~~STA 3+080.940 BEGIN TAPER~~

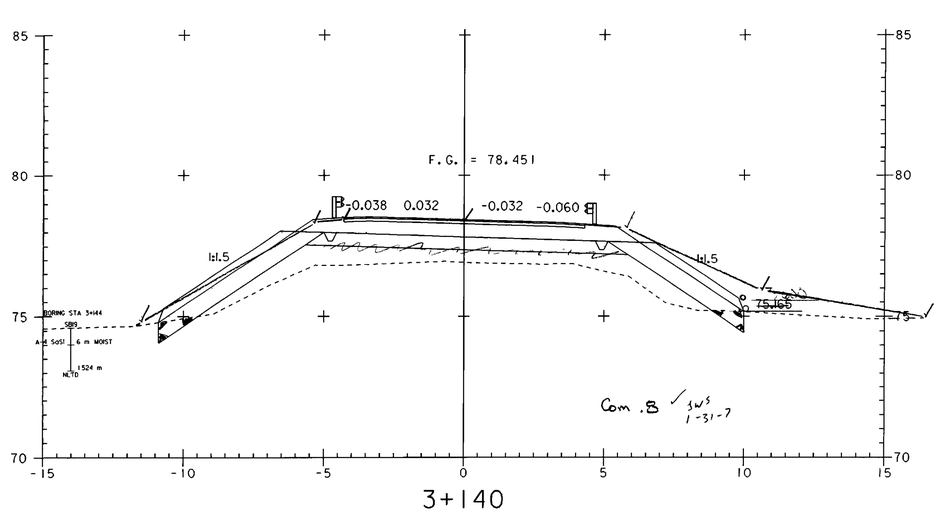

3+140

0 2 4 6 8 10
SCALE IN METERS

PROJECT NAME:	HIGHGATE - FRANKLIN
PROJECT NUMBER:	STP RS 030I(I) SA
FILE NAME: ...85c060\design\dc060x05.dgn	PLOT DATE: 09-MAY-2005
PROJECT LEADER: DELLASANTA	DRAWN BY: SQUAD B
DESIGNED BY: SQUAD B	CHECKED BY: SQUAD B
IPARM FILE NAME: dc060x05I.I	SHEET 320 OF 450

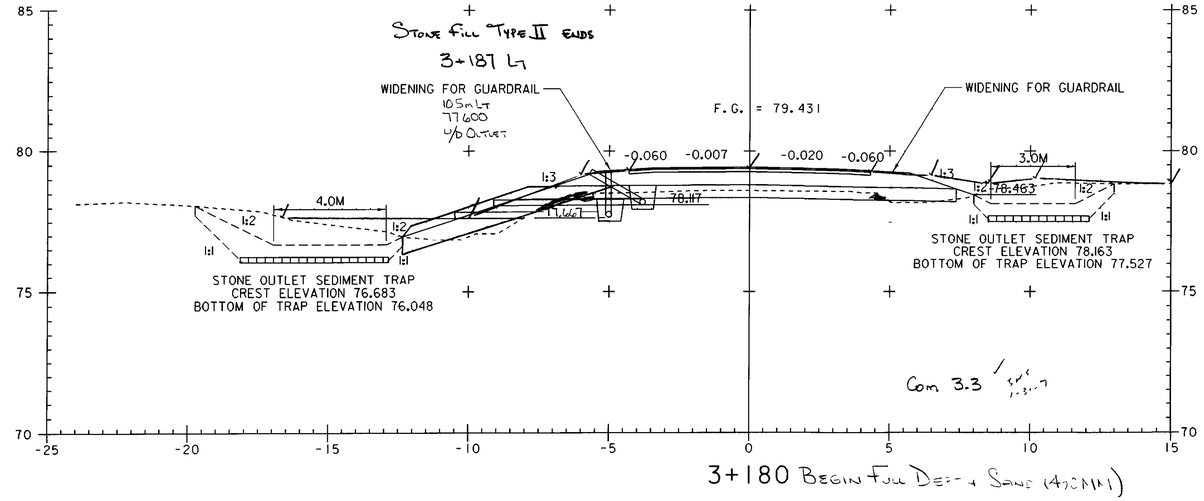

3+180 BEGIN FULL DEPTH SAND (450MM)

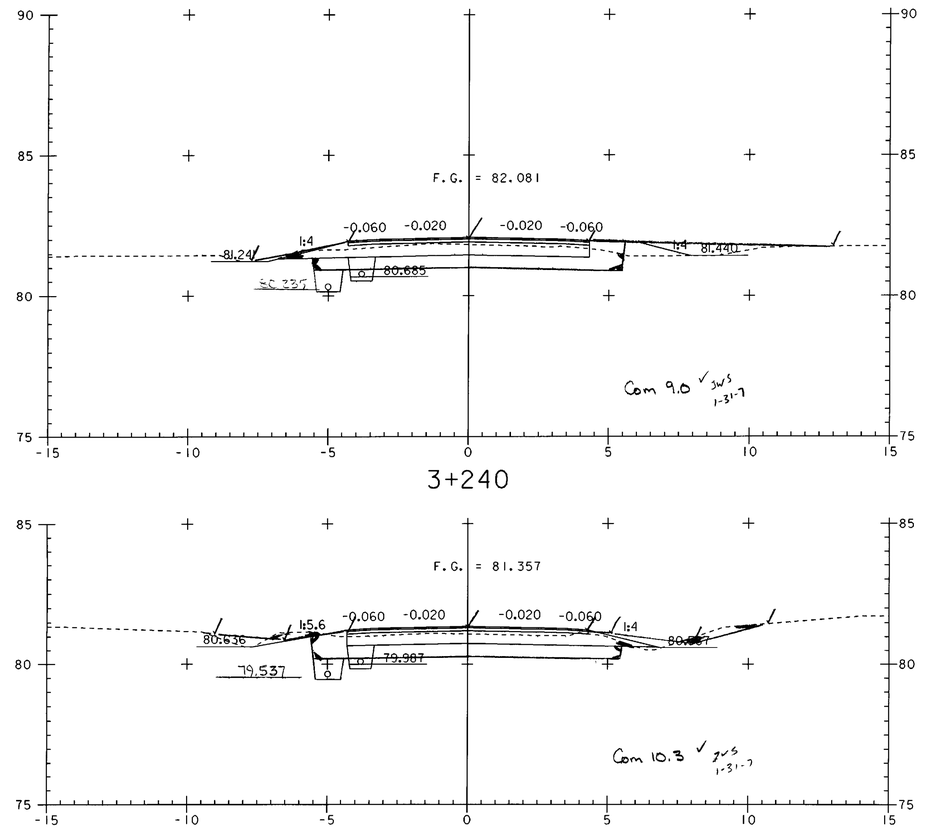

3+240

3+220

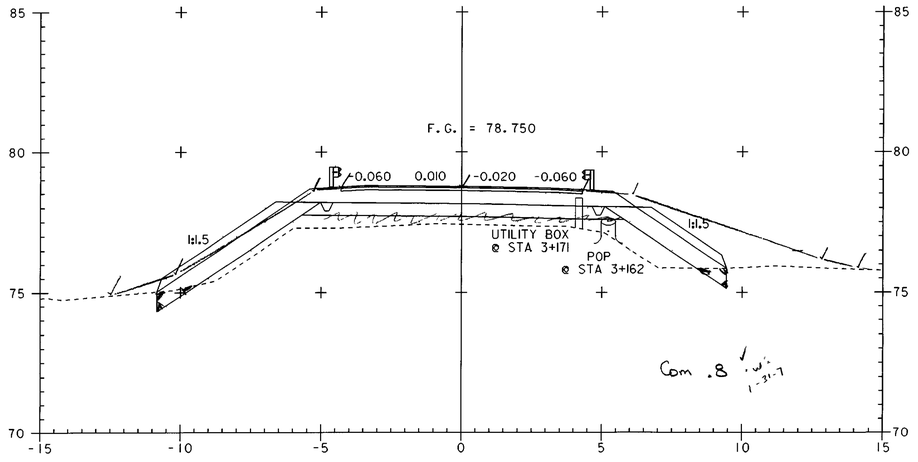

3+160 BEGIN TAPER

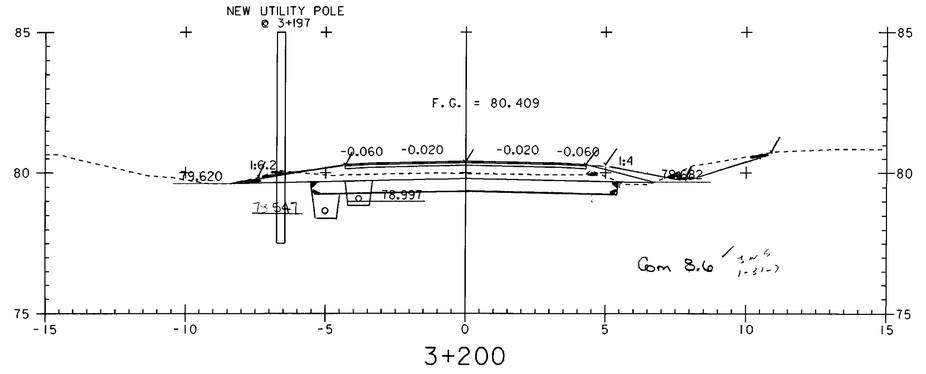

3+200

~~STA 3+184.840 END TAPER~~
~~STA 3+182.620 END FULL DEPTH SAND (450MM) BEGIN TAPER~~

0 2 4 6 8 10
SCALE IN METERS

PROJECT NAME:	HIGHGATE - FRANKLIN
PROJECT NUMBER:	STP RS 0301(1) SA
FILE NAME: ...85c060\design\dc060x05.dgn	PLOT DATE: 09-MAY-2005
PROJECT LEADER: DELLASANTA	DRAWN BY: SQUAD B
DESIGNED BY: SQUAD B	CHECKED BY: SQUAD B
IPARM FILE NAME: dc060x052.i	SHEET 321 OF 450

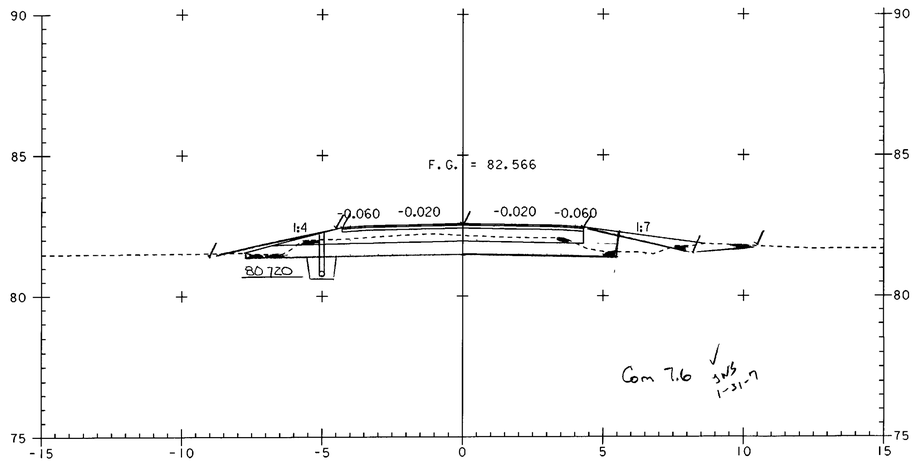

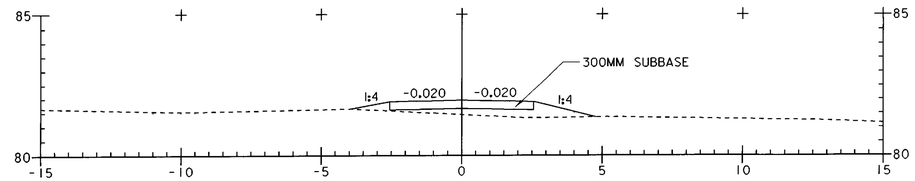

DRIVE AT 3+244 RT
A - A

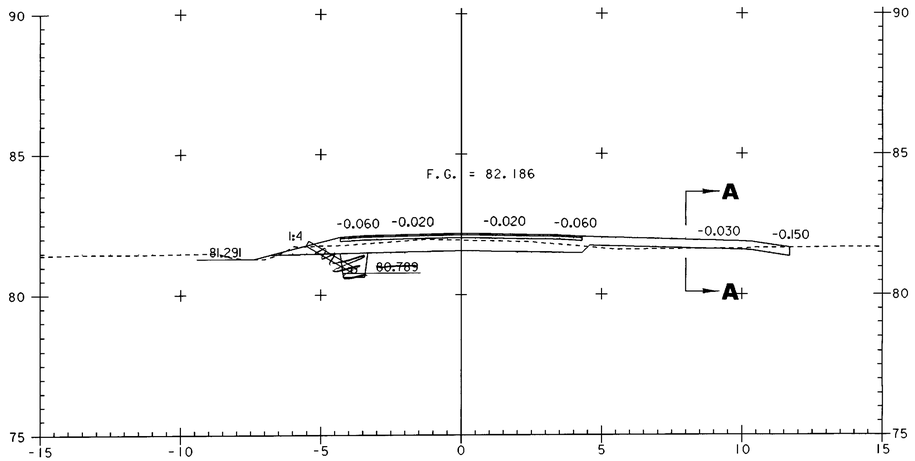

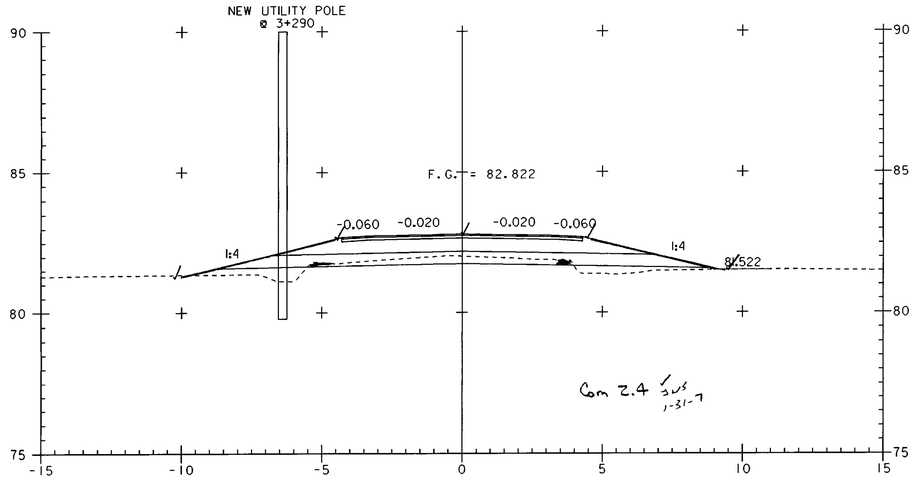

~~STA 3+295.700~~ END TAPER ~~BEGIN~~ FULL DEPTH SAND (450MM)
~~STA 3+295.800~~ BEGIN TAPER

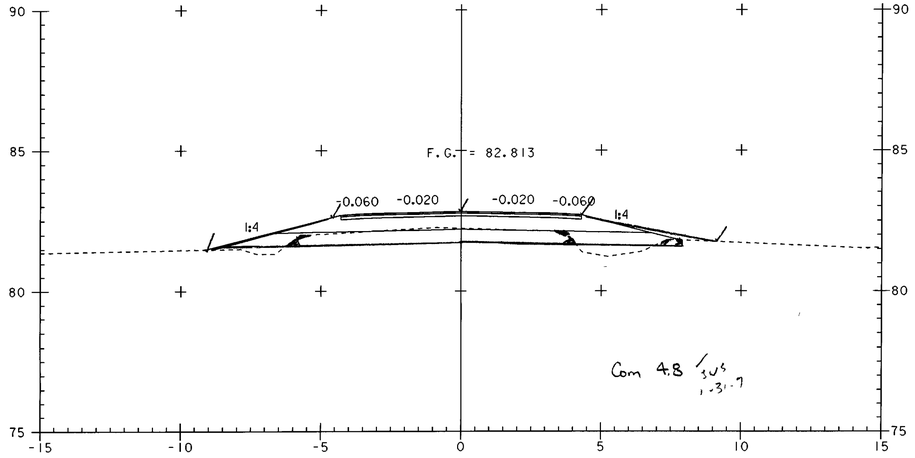

0 2 4 6 8 10
SCALE IN METERS

PROJECT NAME:	HIGHGATE - FRANKLIN
PROJECT NUMBER:	STP RS 0301(1) SA
FILE NAME: ...85c060\design\dc060x05.dgn	PLOT DATE: 09-MAY-2005
PROJECT LEADER: DELLASANTA	DRAWN BY: SQUAD B
DESIGNED BY: SQUAD B	CHECKED BY: SQUAD B
IPARM FILE NAME: dc060x053.i	SHEET 322 OF 450

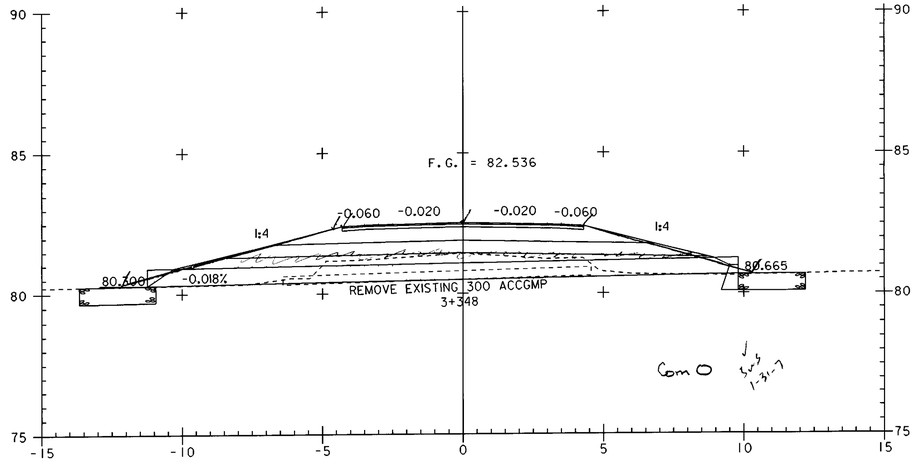

3+340

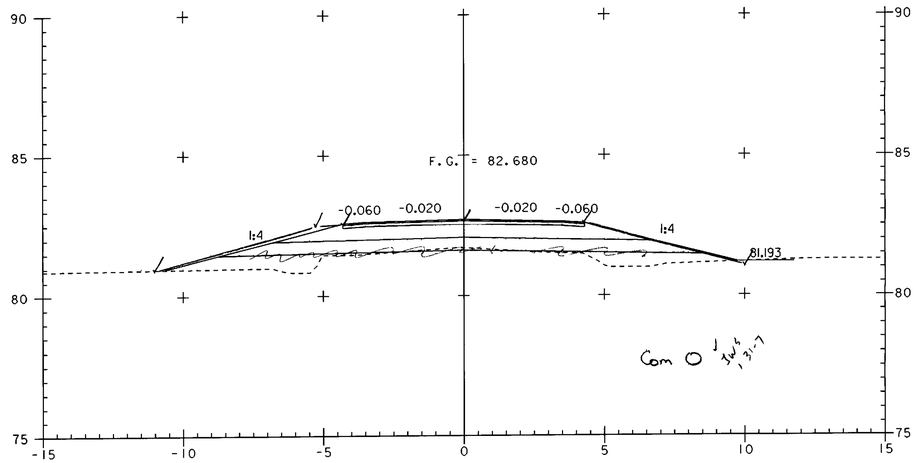

3+320 END SAND TAPER

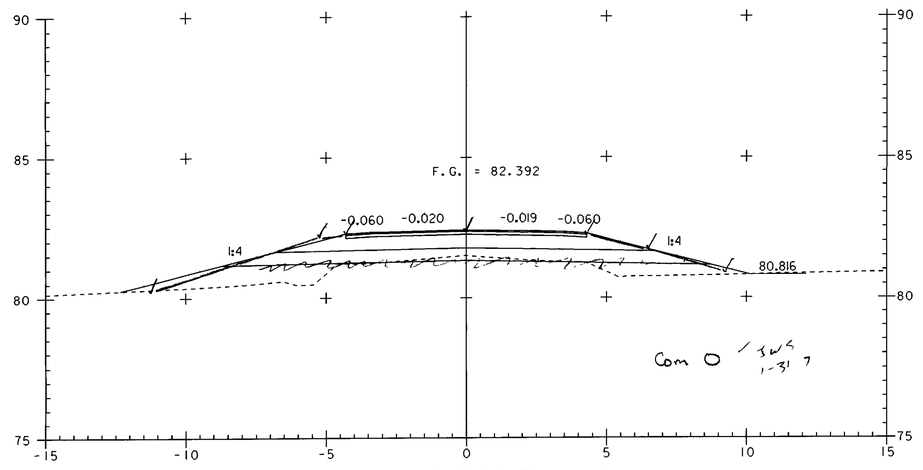

3+360 BEGIN SAND TAPER

0 2 4 6 8 10
SCALE IN METERS

PROJECT NAME:	HIGHGATE - FRANKLIN
PROJECT NUMBER:	STP RS 0301(1) SA
FILE NAME: ...85c060\design\dc060x05.dgn	PLOT DATE: 09-MAY-2005
PROJECT LEADER: DELLASANTA	DRAWN BY: SQUAD B
DESIGNED BY: SQUAD B	CHECKED BY: SQUAD B
IPARM FILE NAME: dc060x054.i	SHEET 323 OF 450

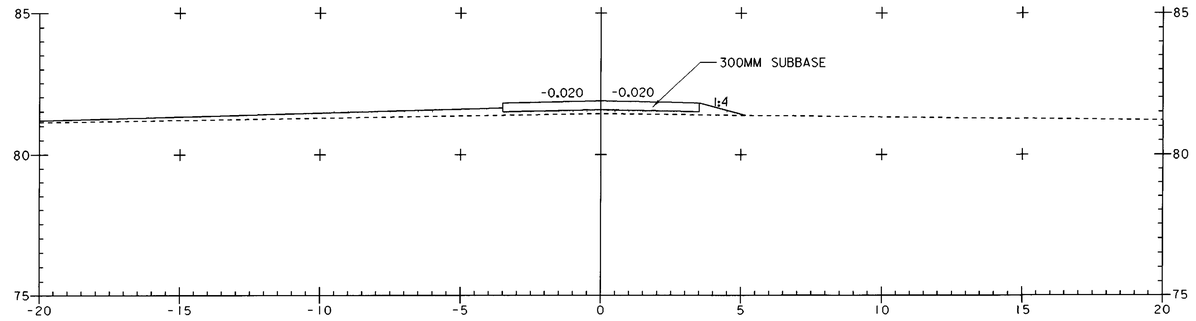

DRIVE AT 3+400 LT
A - A

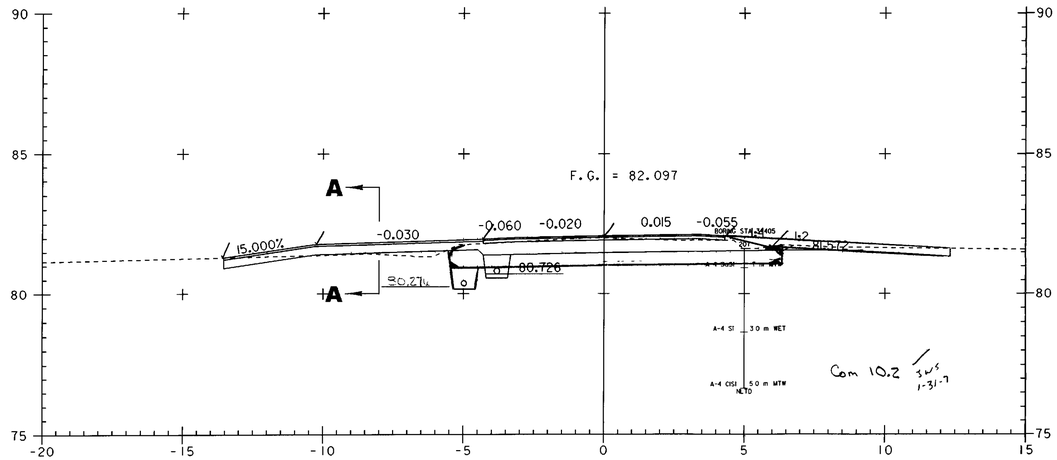

3+400

NEW UTILITY POLE
@ 3+382

~~STA 3+384.200 END TAPER~~
~~STA 3+382.440 END FULL DEPTH SAND (450MM) BEGIN TAPER~~

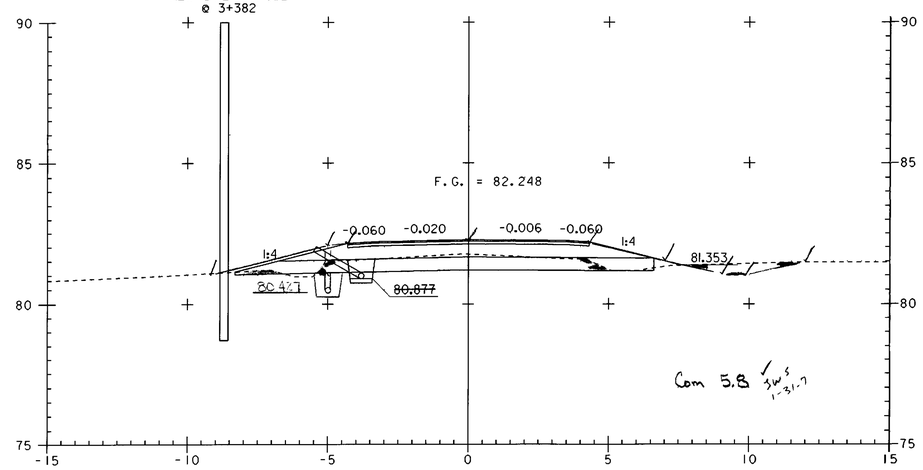

3+380 BEGIN FULL DEPTH SAND (450MM)

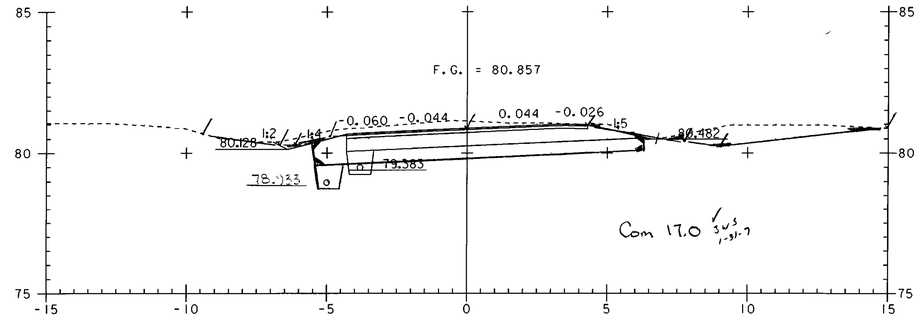

3+440

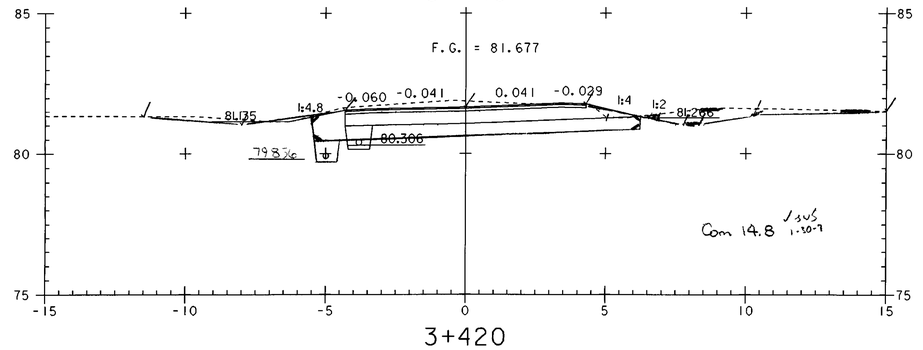

3+420

0 2 4 6 8 10
SCALE IN METERS

PROJECT NAME:	HIGHGATE - FRANKLIN
PROJECT NUMBER:	STP RS 0301(1) SA
FILE NAME: ...85c060\design\dc060x05.dgn	PLOT DATE: 09-MAY-2005
PROJECT LEADER: DELLASANTA	DRAWN BY: SQUAD B
DESIGNED BY: SQUAD B	CHECKED BY: SQUAD B
IPARM FILE NAME: dc060x055.i	SHEET 324 OF 450

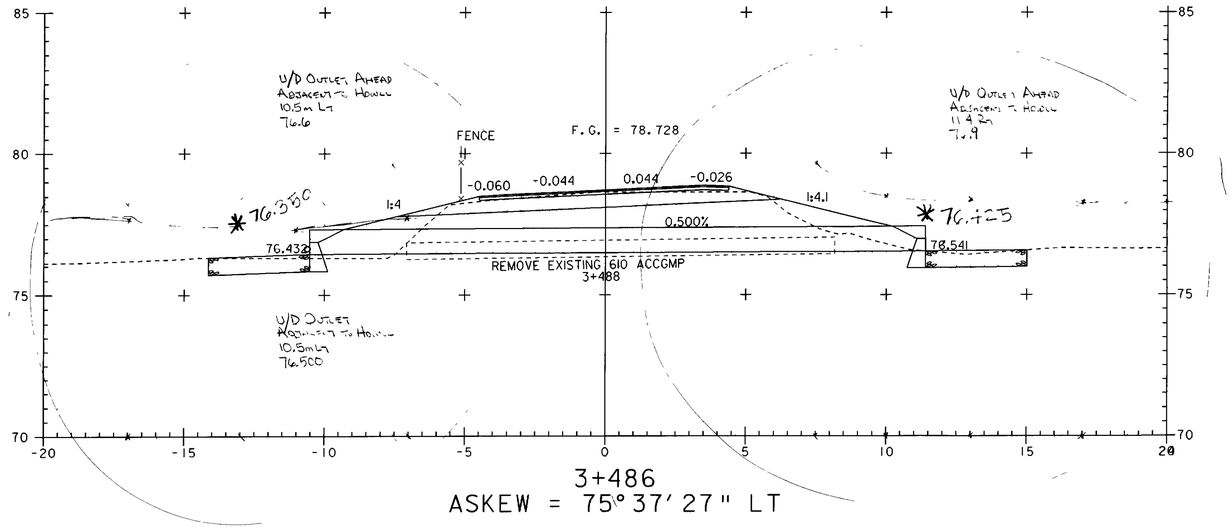

3+486

ASKEW = 75° 37' 27" LT

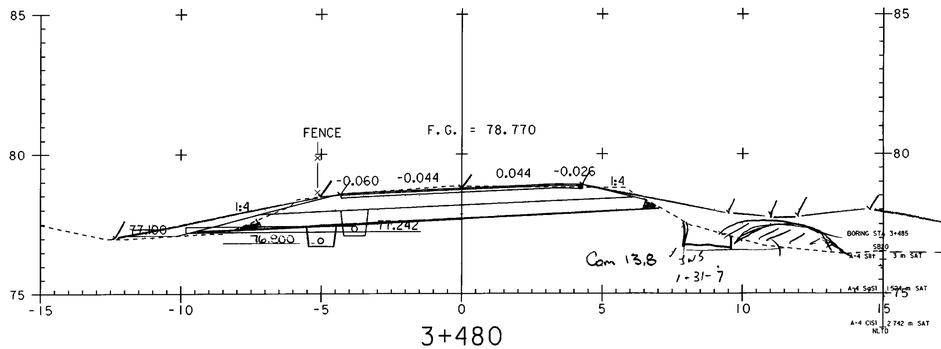

3+480

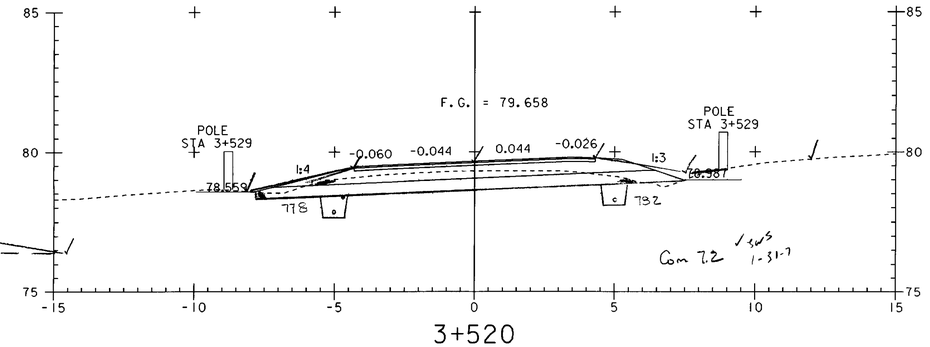

3+520

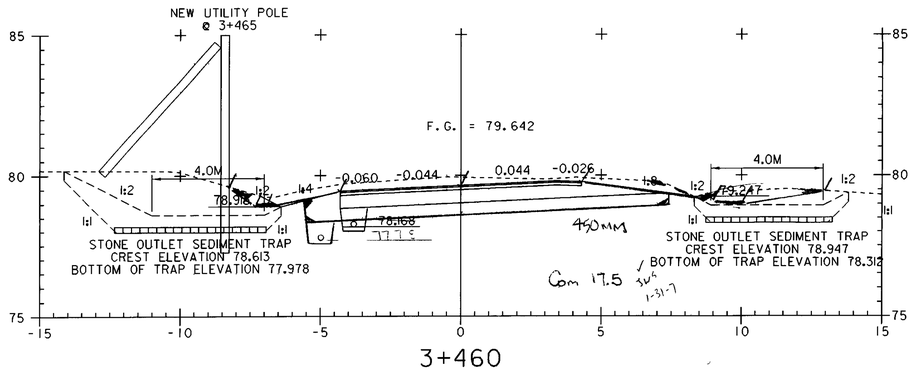

3+460

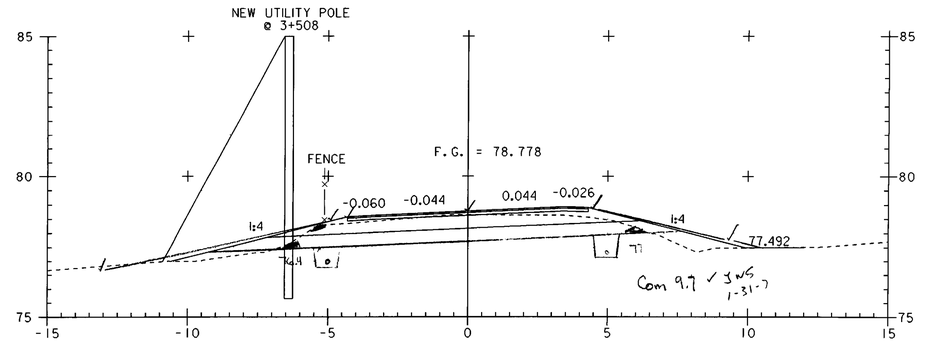

3+500

0 2 4 6 8 10

SCALE IN METERS

PROJECT NAME:	HIGHGATE - FRANKLIN
PROJECT NUMBER:	STP RS 0301(1) SA
FILE NAME: ...85c060\design\dc060x05.dgn	PLOT DATE: 09-MAY-2005
PROJECT LEADER: DELLASANTA	DRAWN BY: SQUAD B
DESIGNED BY: SQUAD B	CHECKED BY: SQUAD B
IPARM FILE NAME: dc060x056.i	SHEET 325 OF 450

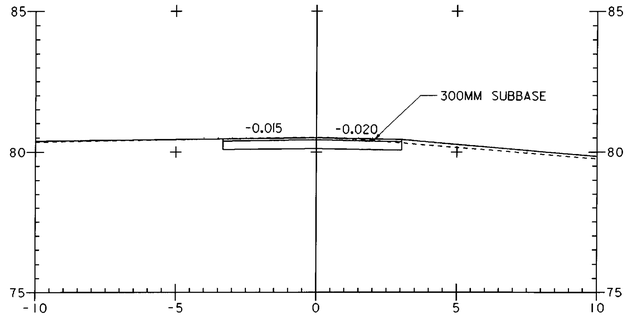

DRIVE AT 3+540 RT
A - A

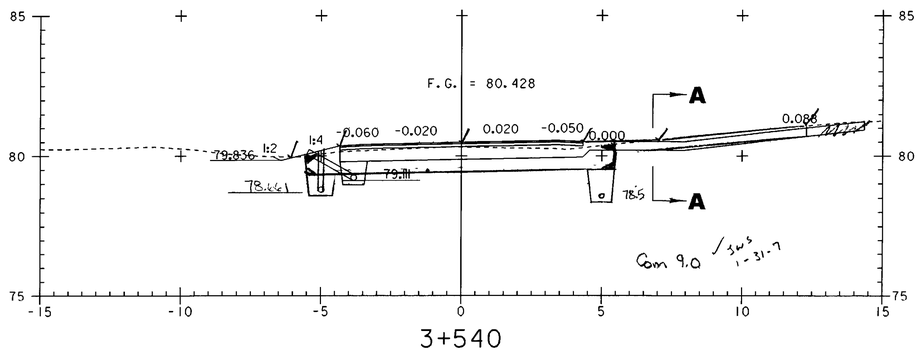

3+540

0 2 4 6 8 10
SCALE IN METERS

PROJECT NAME:	HIGHGATE - FRANKLIN
PROJECT NUMBER:	STP RS 0301(1) SA
FILE NAME: ...85c060\design\dc060x05.dgn	PLOT DATE: 09-MAY-2005
PROJECT LEADER: DELLASANTA	DRAWN BY: SQUAD B
DESIGNED BY: SQUAD B	CHECKED BY: SQUAD B
IPARM FILE NAME: dc060x057.i	SHEET 326 OF 450

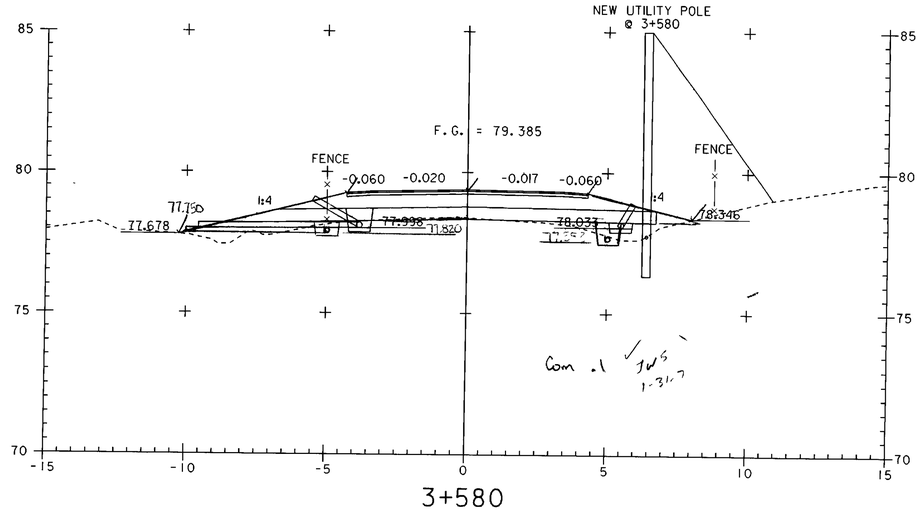

3+580

~~STA 3+572.640~~ END T~~APER BEGIN~~ FULL DEPTH SAND (450MM)
~~STA 3+570.400~~ BEGIN TAPER

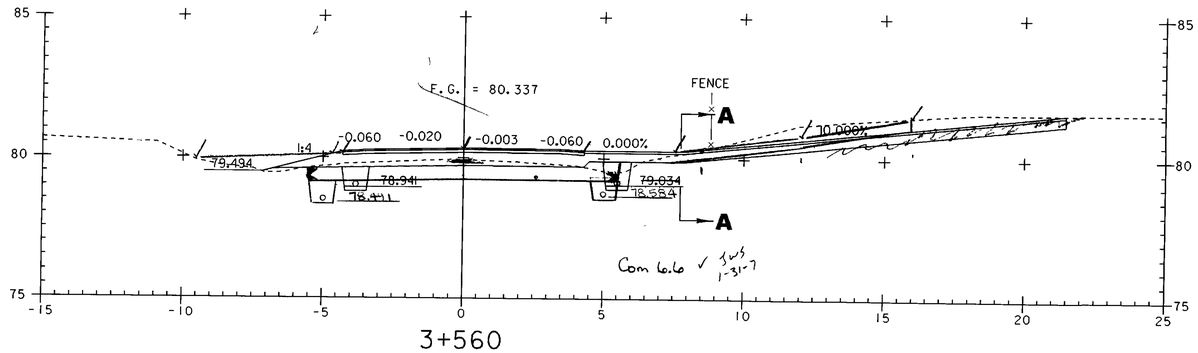

3+560

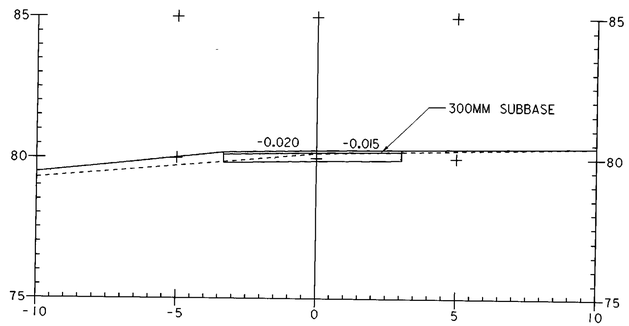

DRIVE AT 3+560 RT
A - A

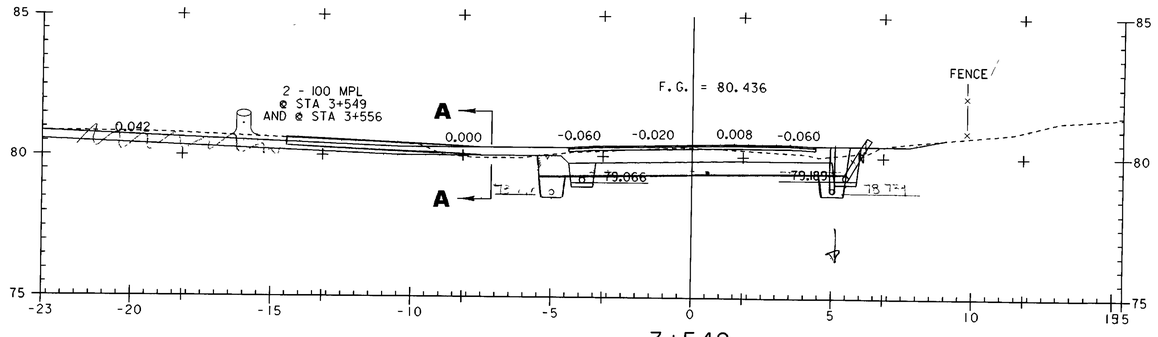

3+549

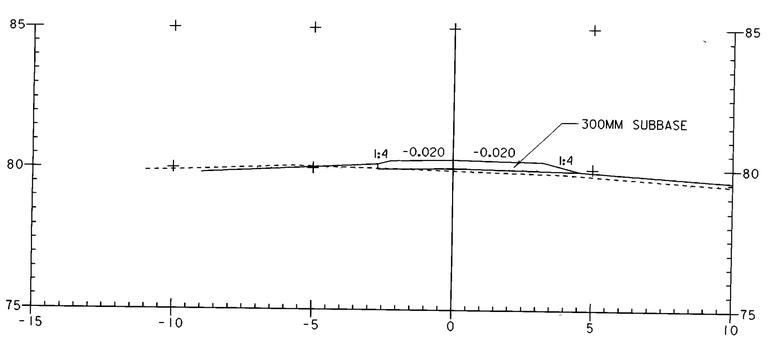

DRIVE AT 3+549 LT
A - A

0 2 4 6 8 10
SCALE IN METERS

PROJECT NAME:	HIGHGATE - FRANKLIN
PROJECT NUMBER:	STP RS 0301(1) SA
FILE NAME: ...85c060\design\dc060x05.dgn	PLOT DATE: 09-MAY-2005
PROJECT LEADER: DELLASANTA	DRAWN BY: SQUAD B
DESIGNED BY: SQUAD B	CHECKED BY: SQUAD B
IPARM FILE NAME: dc060x058.I	SHEET 327 OF 450

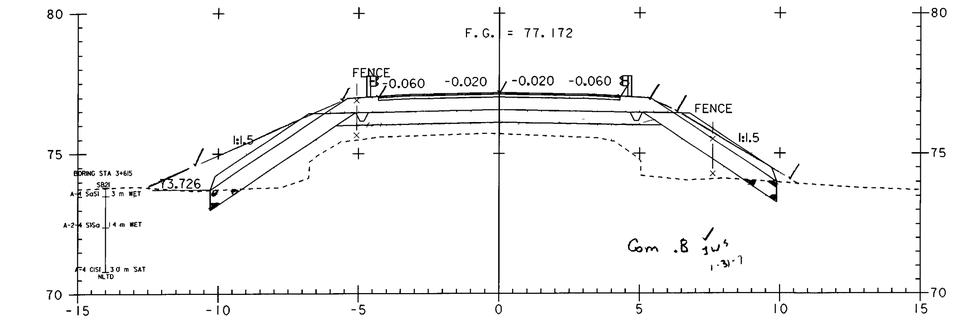

Com .8 3,4,5 1-31-7

3+620

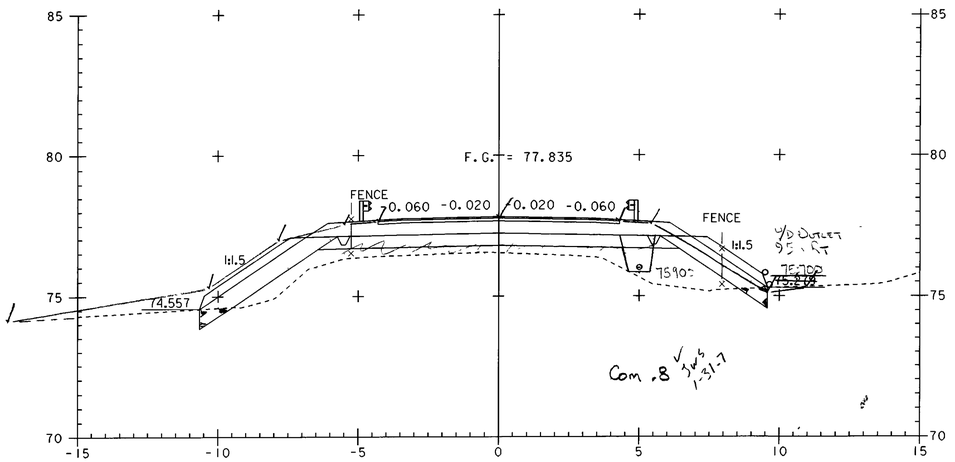

Com .8 3,4,5 1-31-7

3+600 End Taper

3+592 Lt & 3+594 Ct

0 2 4 6 8 10
SCALE IN METERS

PROJECT NAME:	HIGHGATE - FRANKLIN
PROJECT NUMBER:	STP RS 0301(1) SA
FILE NAME: ...85c060\design\dc060x05.dgn	PLOT DATE: 09-MAY-2005
PROJECT LEADER: DELLASANTA	DRAWN BY: SQUAD B
DESIGNED BY: SQUAD B	CHECKED BY: SQUAD B
IPARM FILE NAME: dc060x059.i	SHEET 328 OF 450

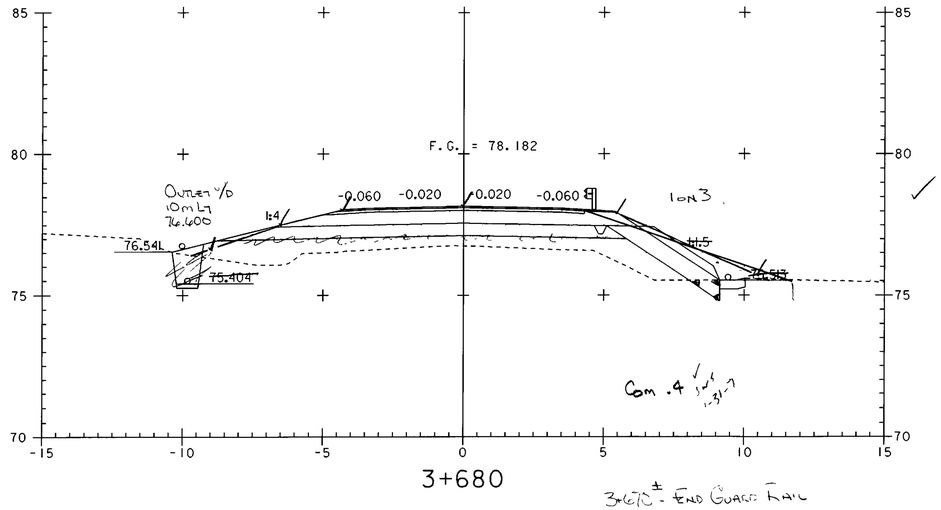

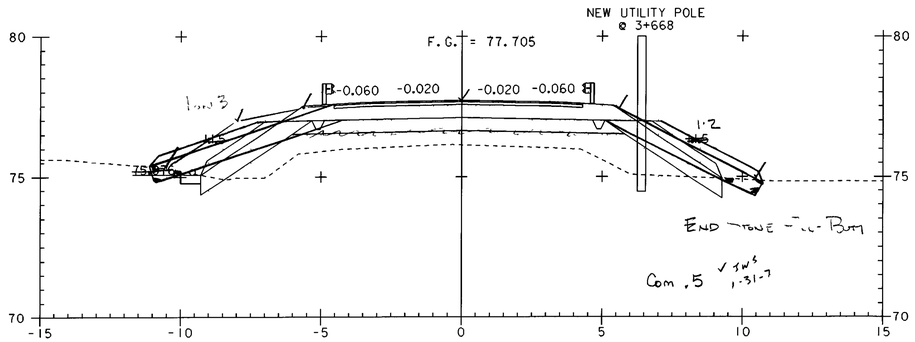

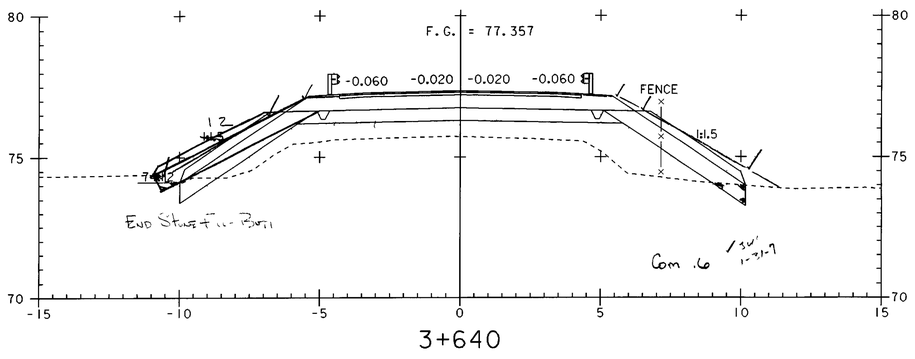

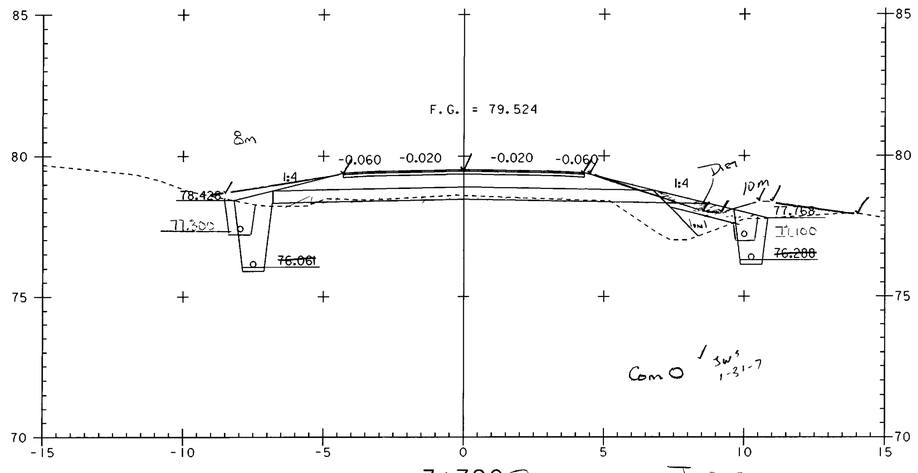

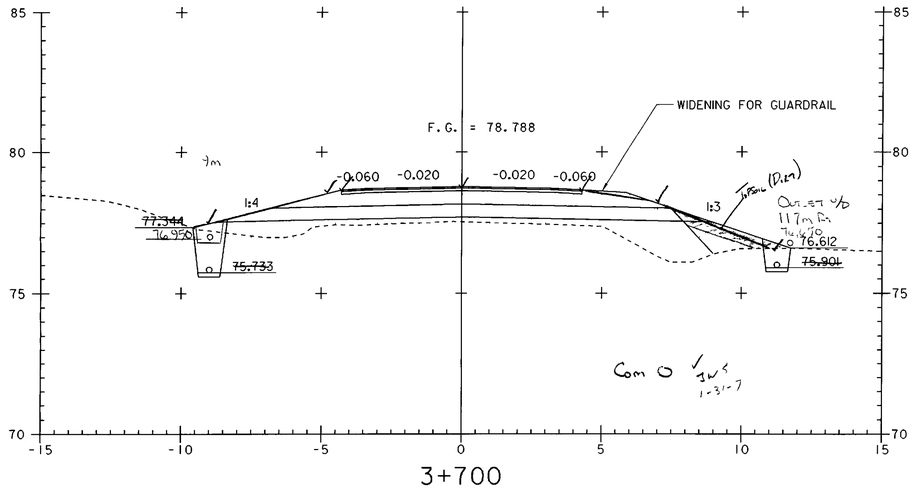

0 2 4 6 8 10
SCALE IN METERS

PROJECT NAME:	HIGHGATE - FRANKLIN
PROJECT NUMBER:	STP RS 0301(1) SA
FILE NAME: ...85c060\design\dc060x05.dgn	PLOT DATE: 09-MAY-2005
PROJECT LEADER: DELLASANTA	DRAWN BY: SQUAD B
DESIGNED BY: SQUAD B	CHECKED BY: SQUAD B
IPARM FILE NAME: dc060x0510.I	SHEET 329 OF 450

VDOT Metric

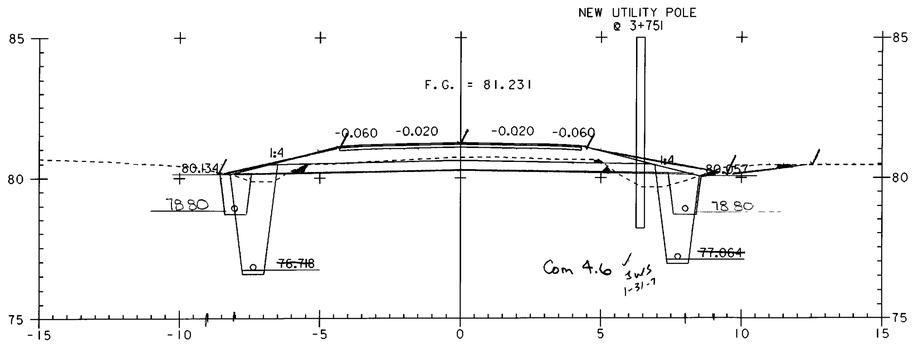

3+760

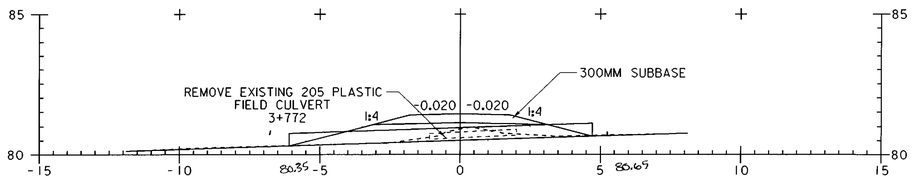

DRIVE AT 3+772 LT
A - A

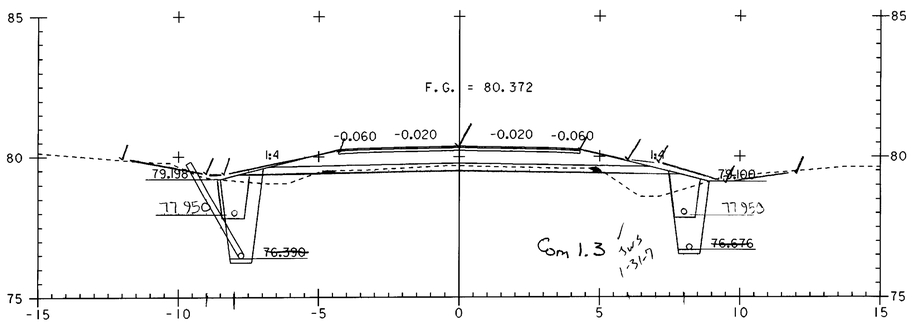

3+740 Begin Full Depth Sand (300MM)

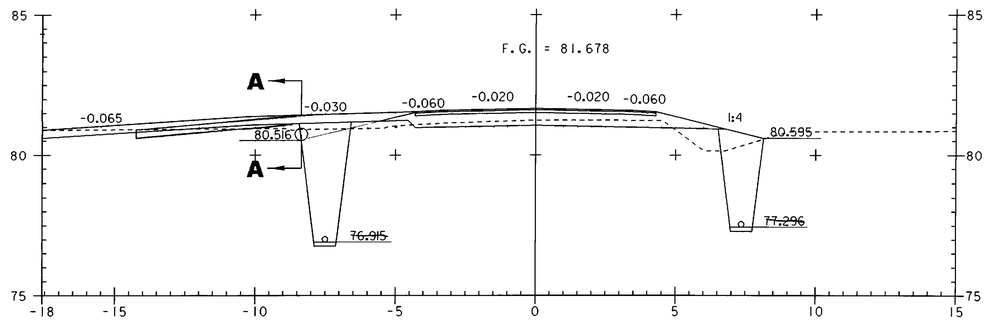

3+772

~~STA 3+738.540 END TAPER~~
~~STA 3+736.380 END FULL DEPTH SAND (450MM) BEGIN TAPER~~

0 2 4 6 8 10
SCALE IN METERS

PROJECT NAME:	HIGHGATE - FRANKLIN
PROJECT NUMBER:	STP RS 0301(1) SA
FILE NAME: ...85c060\design\dc060x05.dgn	PLOT DATE: 09-MAY-2005
PROJECT LEADER: DELLASANTA	DRAWN BY: SQUAD B
DESIGNED BY: SQUAD B	CHECKED BY: SQUAD B
IPARM FILE NAME: dc060x05ll.i	SHEET 330 OF 450

Metric

PROFILE TH #32

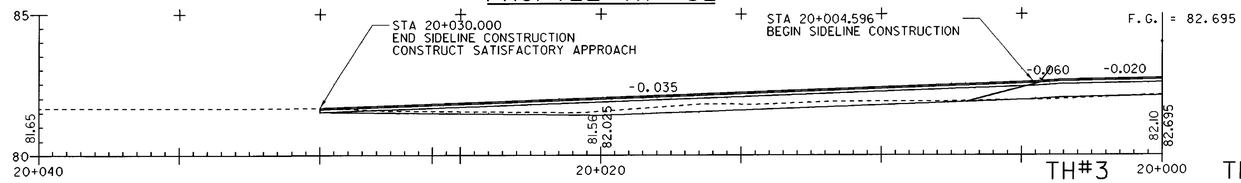

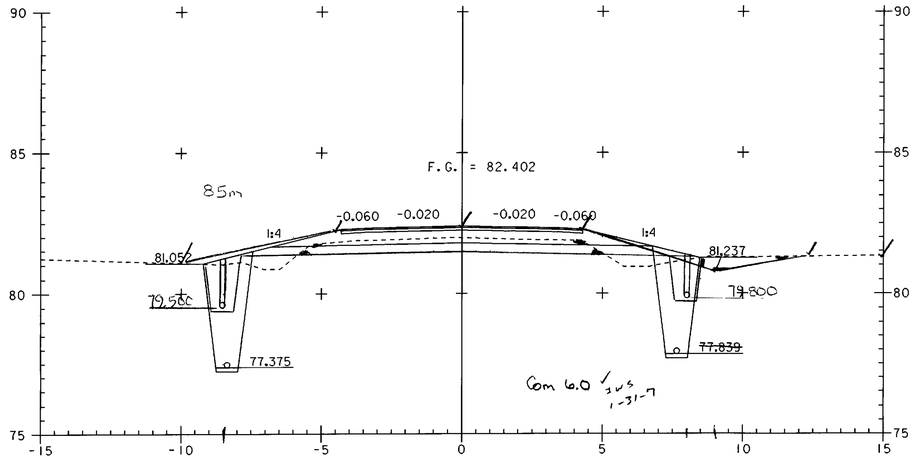

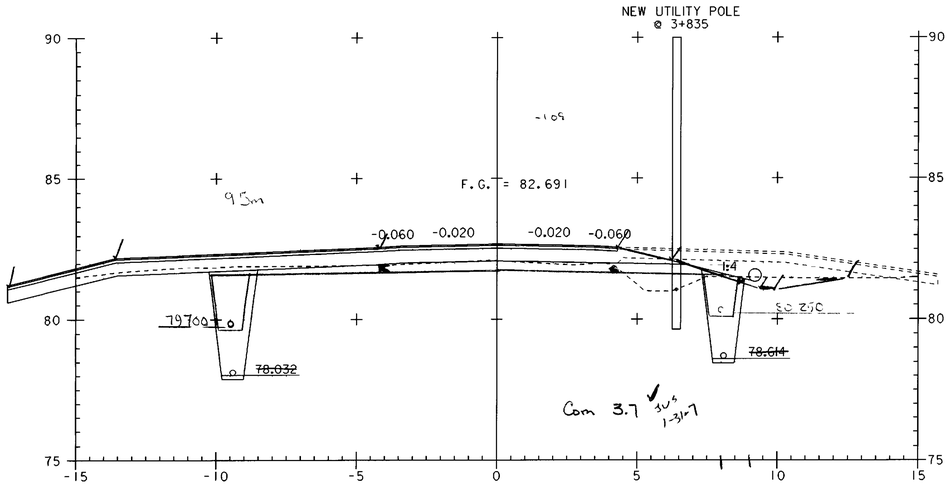

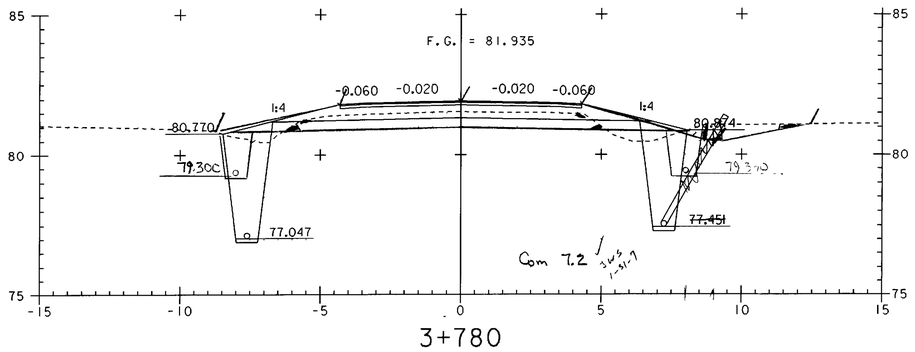

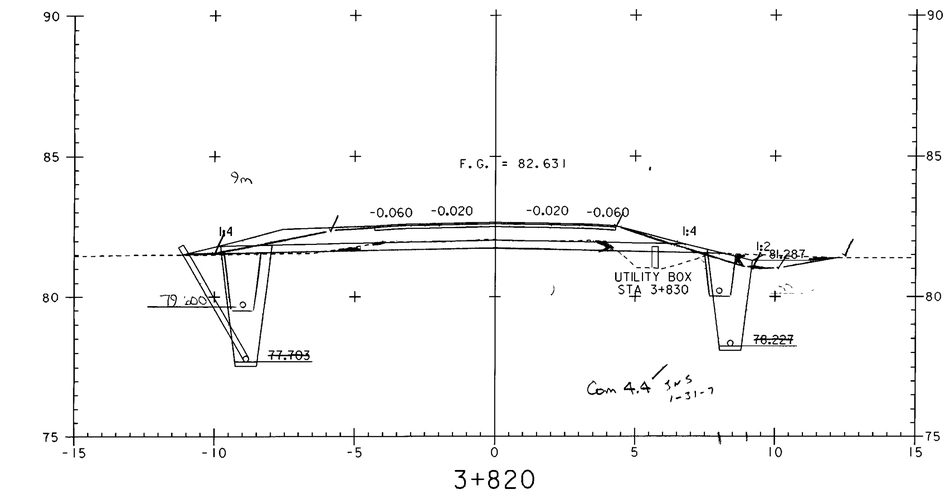

0 2 4 6 8 10
SCALE IN METERS

PROJECT NAME:	HIGHGATE - FRANKLIN
PROJECT NUMBER:	STP RS 0301(I) SA
FILE NAME: ...85c060\design\dc060x05.dgn	PLOT DATE: 09-MAY-2005
PROJECT LEADER: DELLASANTA	DRAWN BY: SQUAD B
DESIGNED BY: SQUAD B	CHECKED BY: SQUAD B
IPARM FILE NAME: dc060x0512.i	SHEET 331 OF 450

TH #32 SECTIONS

VAOT Metric

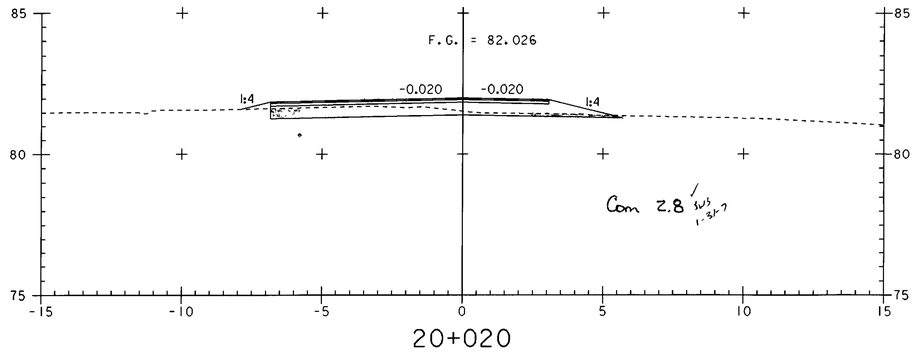

20+020

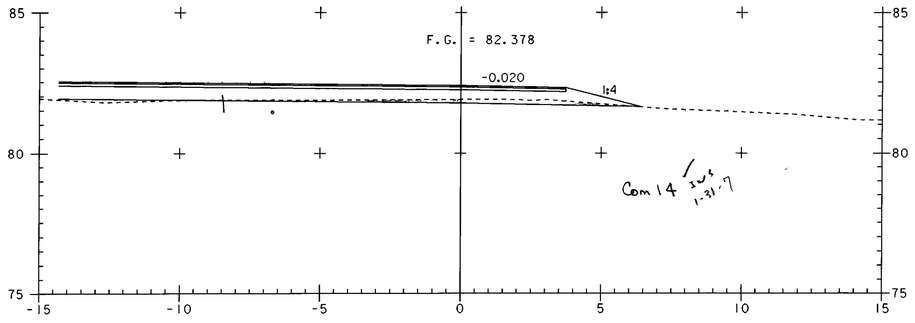

20+010

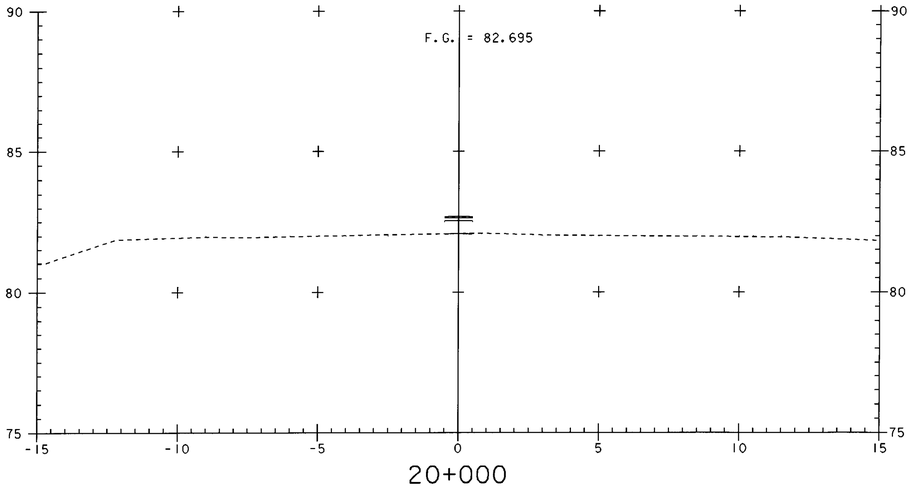

20+000

0 2 4 6 8 10
SCALE IN METERS

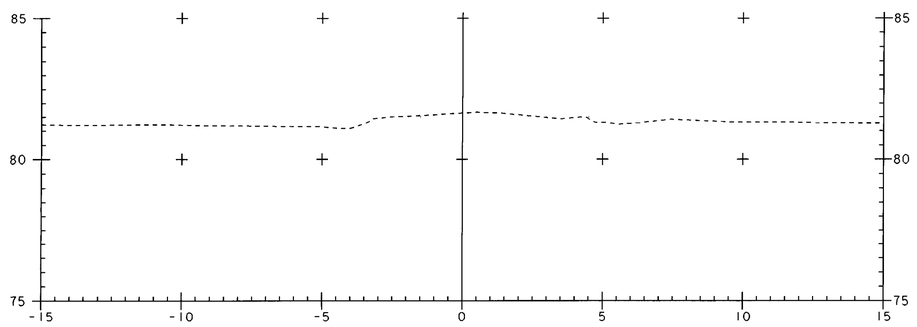

20+050

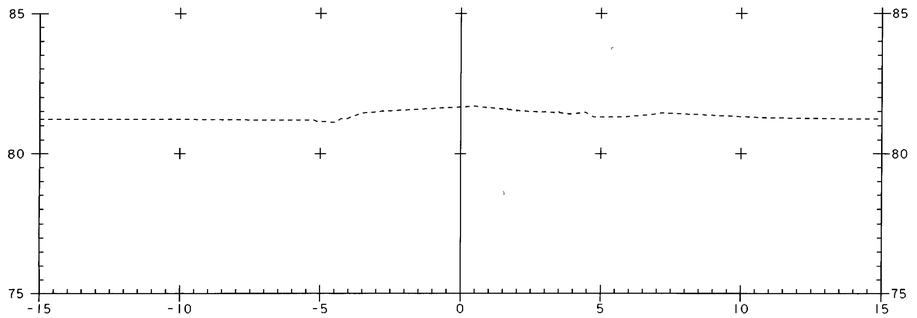

20+040

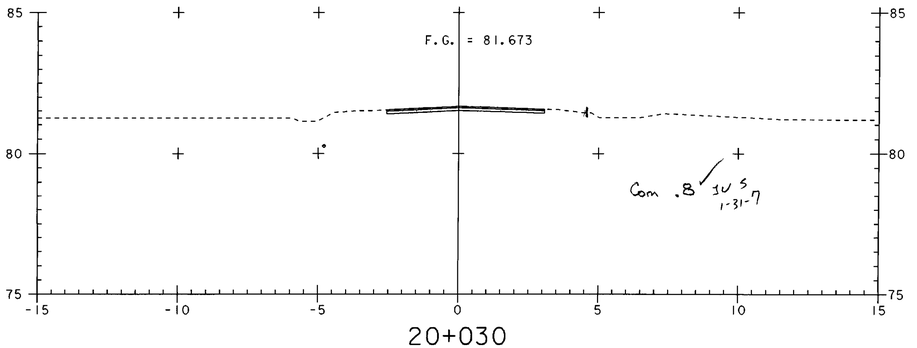

20+030

TRANSITION DETAIL

PROJECT NAME:	HIGHGATE - FRANKLIN
PROJECT NUMBER:	STP RS 0301(1) SA
FILE NAME: ...85c060\design\dc060x05.dgn	PLOT DATE: 09-MAY-2005
PROJECT LEADER: DELLASANTA	DRAWN BY: SQUAD B
DESIGNED BY: SQUAD B	CHECKED BY: SQUAD B
IPARM FILE NAME: dc060x0513.i	SHEET 332 OF 450

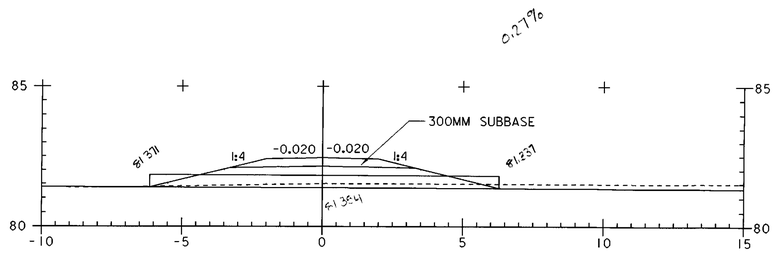

DRIVE AT 3+845 RT
A - A

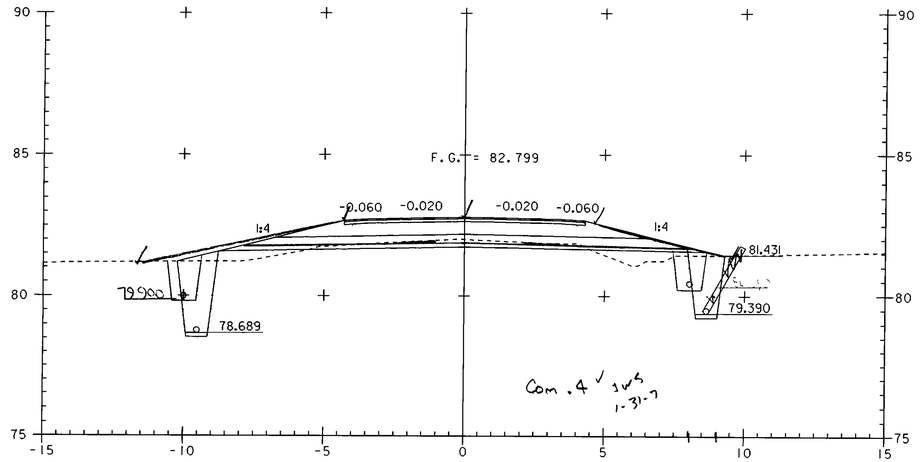

3+880

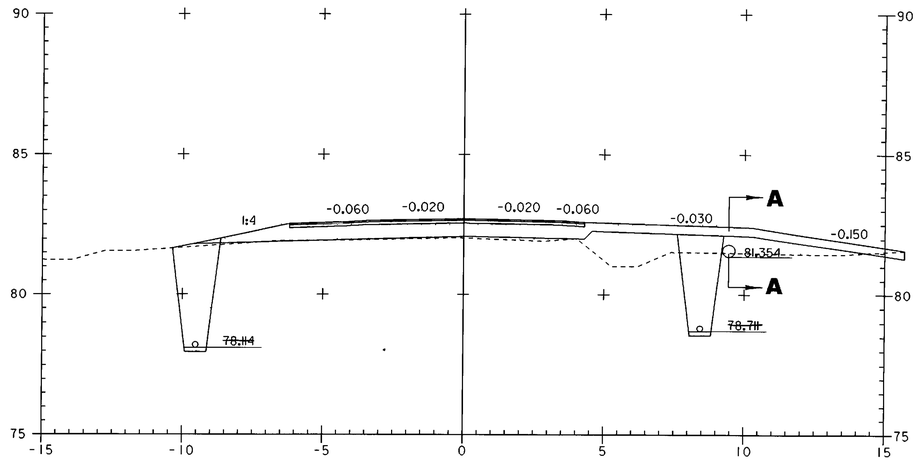

3+845

STA 3+871.420 END TAPER BEGIN FULL DEPTH SAND (450MM)
STA 3+869.640 BEGIN TAPER

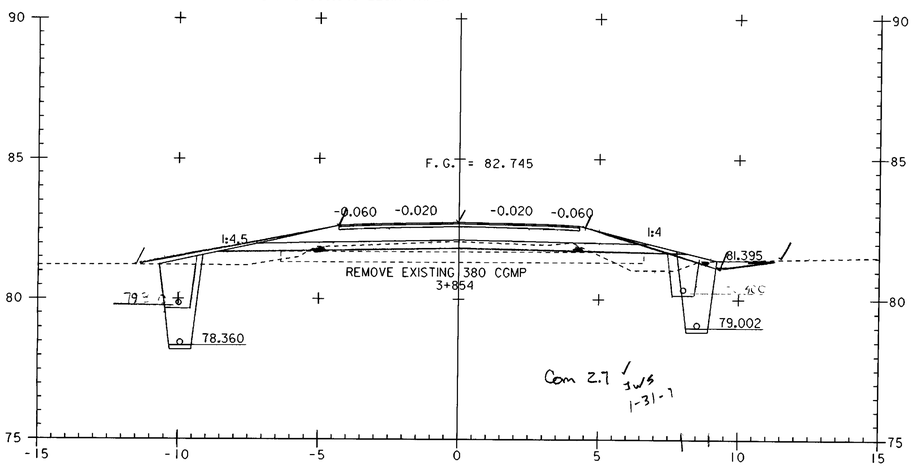

3+860

0 2 4 6 8 10
SCALE IN METERS

PROJECT NAME:	HIGHGATE - FRANKLIN
PROJECT NUMBER:	STP RS 0301(1) SA
FILE NAME: ...85c060\design\dc060x05.dgn	PLOT DATE: 09-MAY-2005
PROJECT LEADER: DELLASANTA	DRAWN BY: SQUAD B
DESIGNED BY: SQUAD B	CHECKED BY: SQUAD B
IPARM FILE NAME: dc060x0514.i	SHEET 333 OF 450

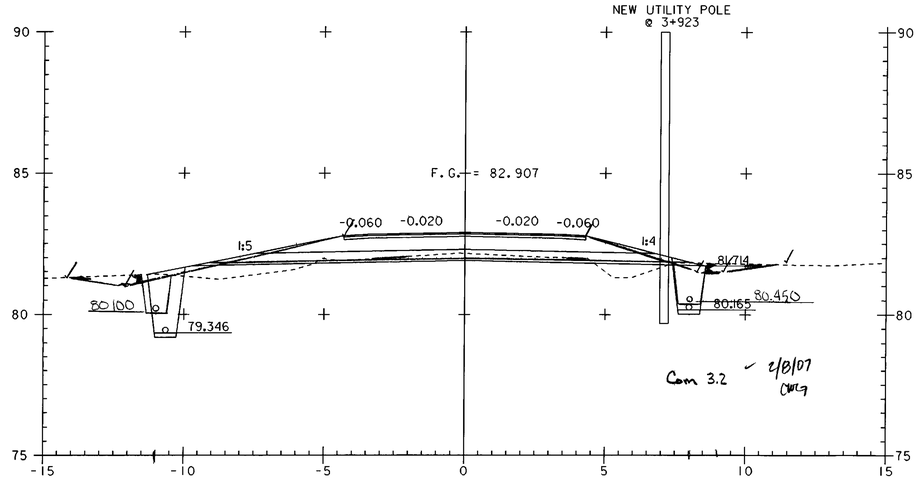

3+920

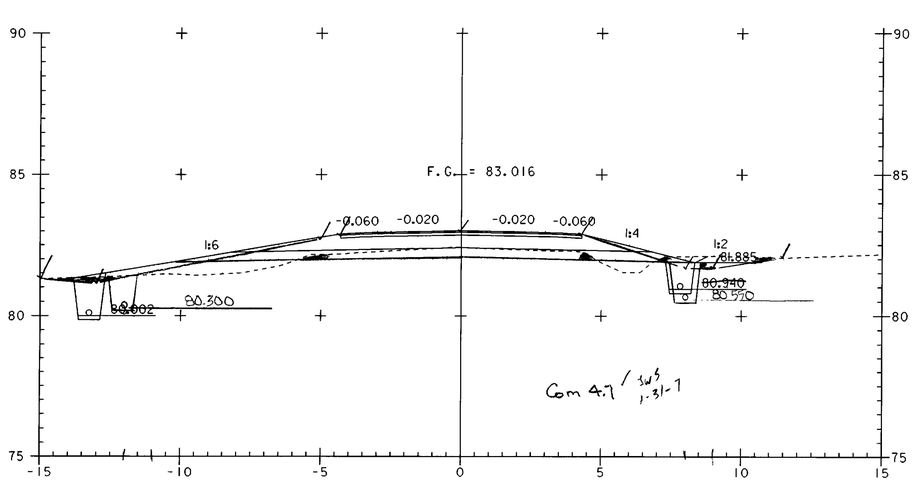

3+960

~~STA 3+919.780 END FULL DEPTH SAND (450MM) BEGIN TAPER~~

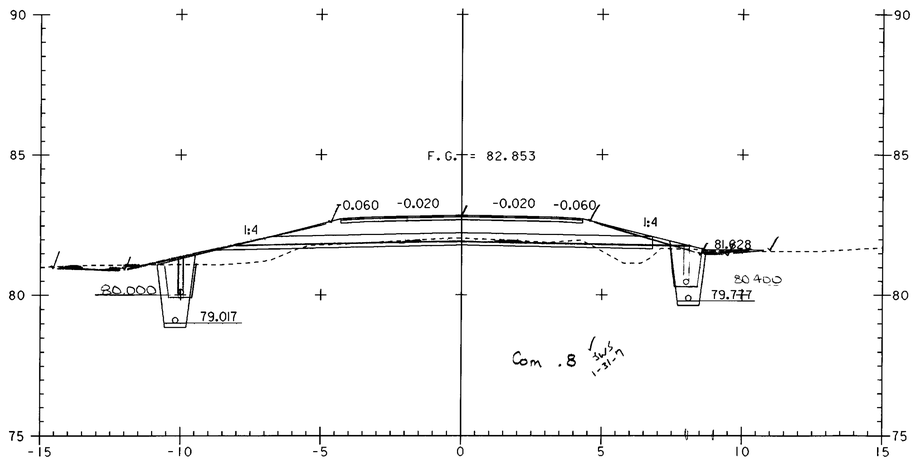

3+900

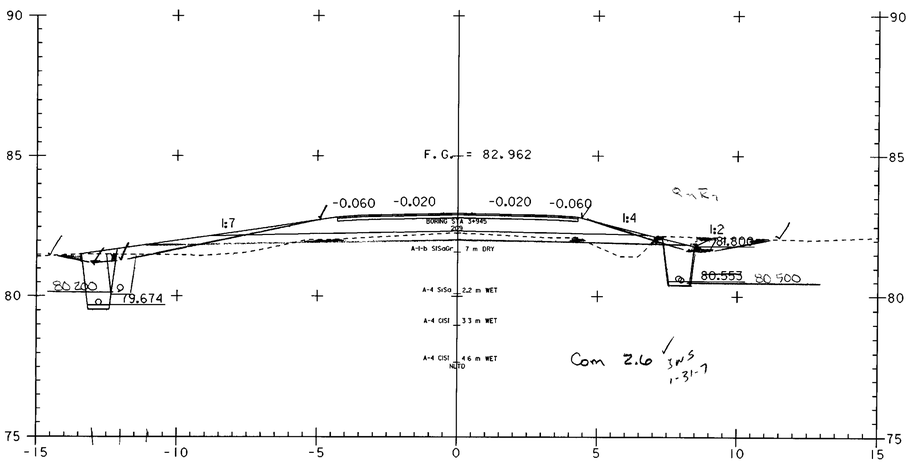

3+940

~~STA 3+921.600 END TAPER~~

0 2 4 6 8 10
SCALE IN METERS

PROJECT NAME: HIGHGATE - FRANKLIN	
PROJECT NUMBER: STP RS 0301(1) SA	
FILE NAME: ...85c060\design\dc060x05.dgn	PLOT DATE: 09-MAY-2005
PROJECT LEADER: DELLASANTA	DRAWN BY: SQUAD B
DESIGNED BY: SQUAD B	CHECKED BY: SQUAD B
IPARM FILE NAME: dc060x0515.i	SHEET 334 OF 450

Metric

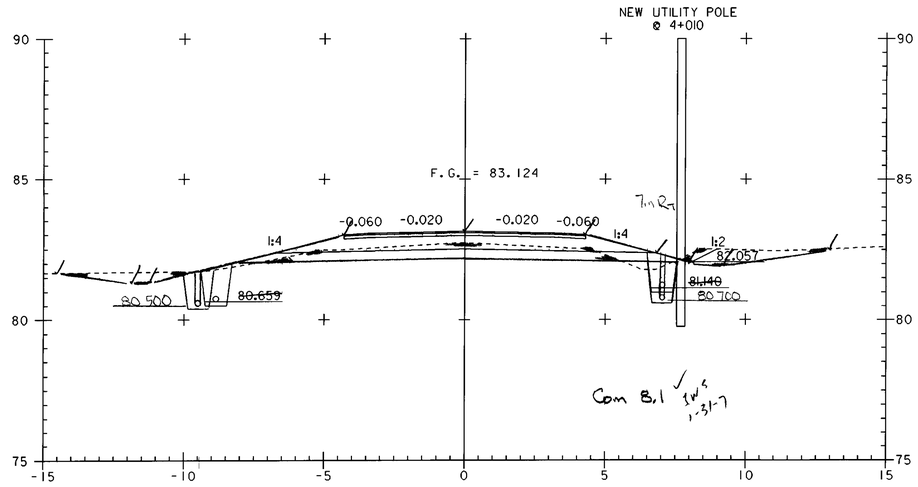

4+000

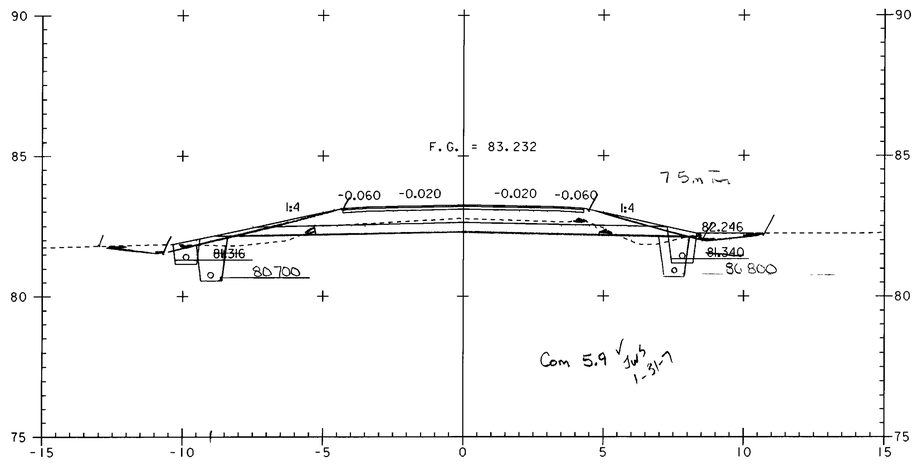

4+040

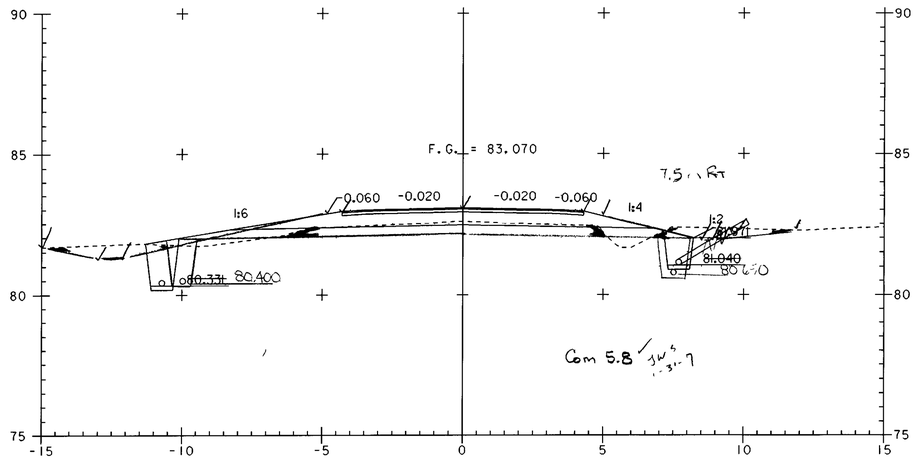

3+980

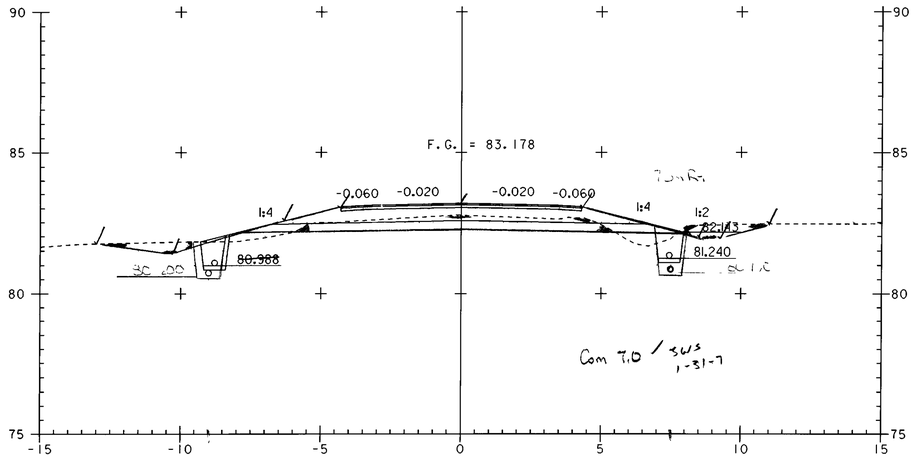

4+020

0 2 4 6 8 10
SCALE IN METERS

PROJECT NAME: HIGHGATE - FRANKLIN	
PROJECT NUMBER: STP RS 0301(1) SA	
FILE NAME: ...85c060\design\dc060x05.dgn	PLOT DATE: 09-MAY-2005
PROJECT LEADER: DELLASANTA	DRAWN BY: SQUAD B
DESIGNED BY: SQUAD B	CHECKED BY: SQUAD B
IPARM FILE NAME: dc060x0516.i	SHEET 335 OF 450

VDOT Metric

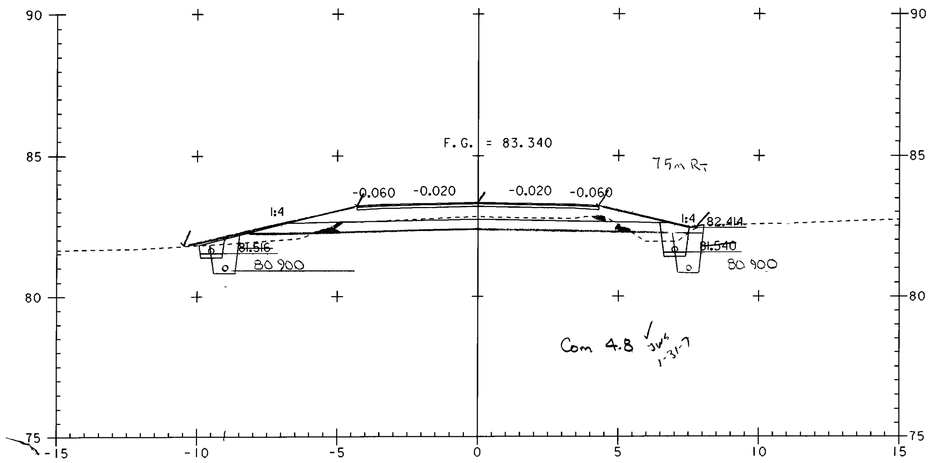

4+080

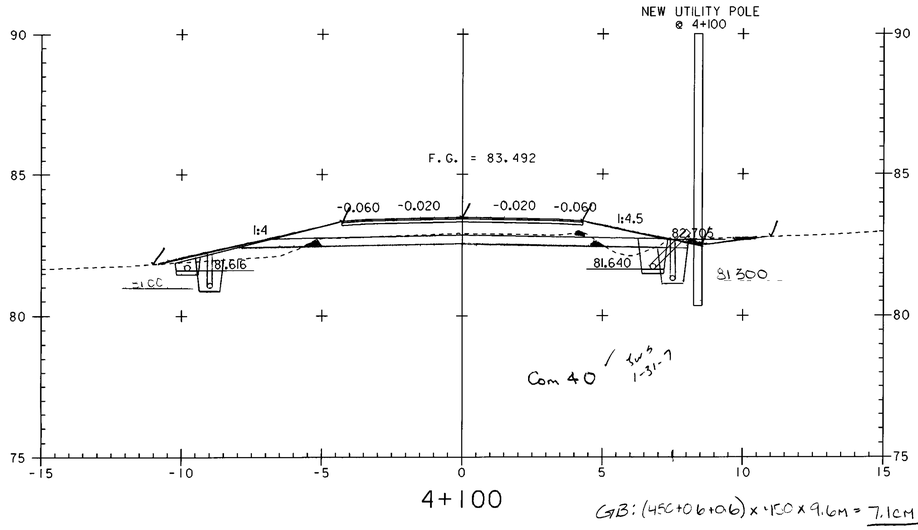

4+100

GB: (4.5C+0.6+0.6) x 1.5 x 9.6m = 7.1CM JWS 1-31-7

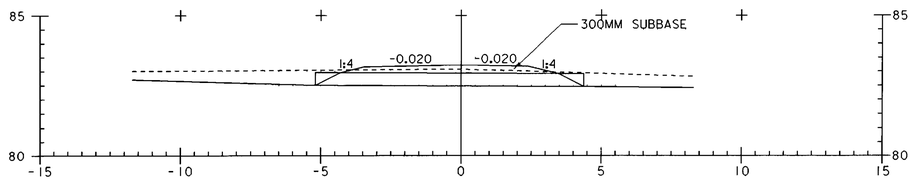

DRIVE AT 4+086 RT
A - A

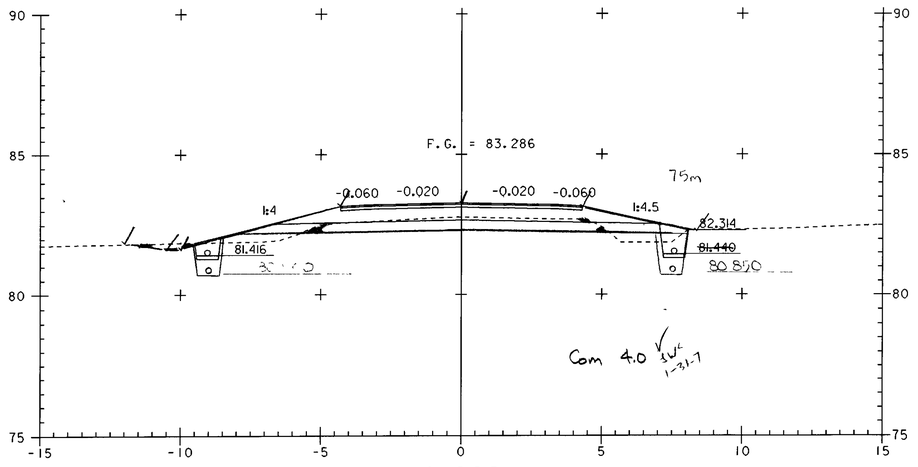

4+060

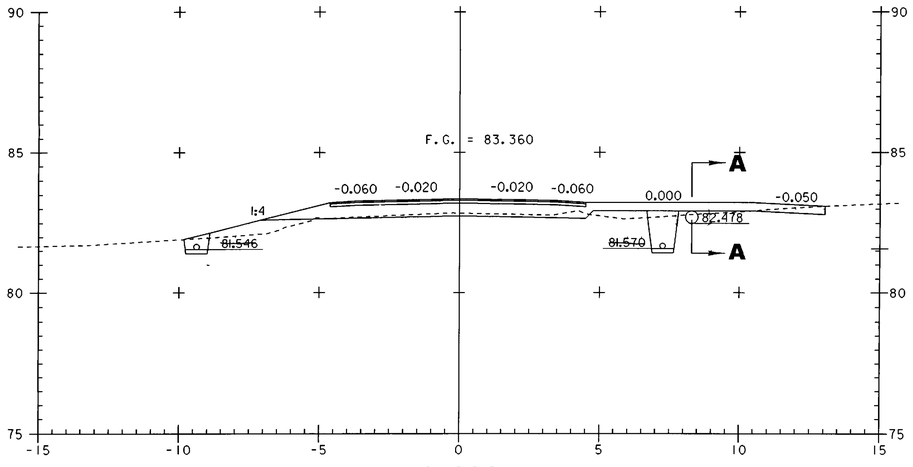

4+086

0 2 4 6 8 10
SCALE IN METERS

PROJECT NAME:	HIGHGATE - FRANKLIN
PROJECT NUMBER:	STP RS 0301(1) SA
FILE NAME: ...85c060\design\dc060x05.dgn	PLOT DATE: 09-MAY-2005
PROJECT LEADER: DELLASANTA	DRAWN BY: SQUAD B
DESIGNED BY: SQUAD B	CHECKED BY: SQUAD B
IPARM FILE NAME: dc060x0517.i	SHEET 336 OF 450

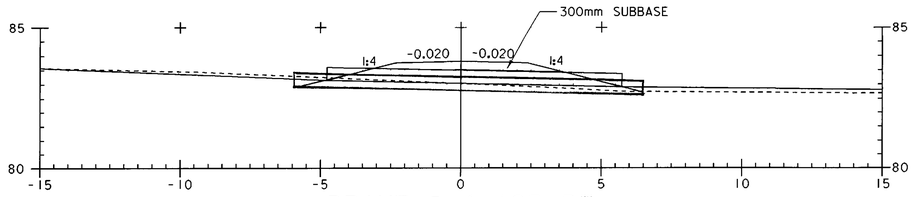

DRIVE @ 4+125 RT
A - A

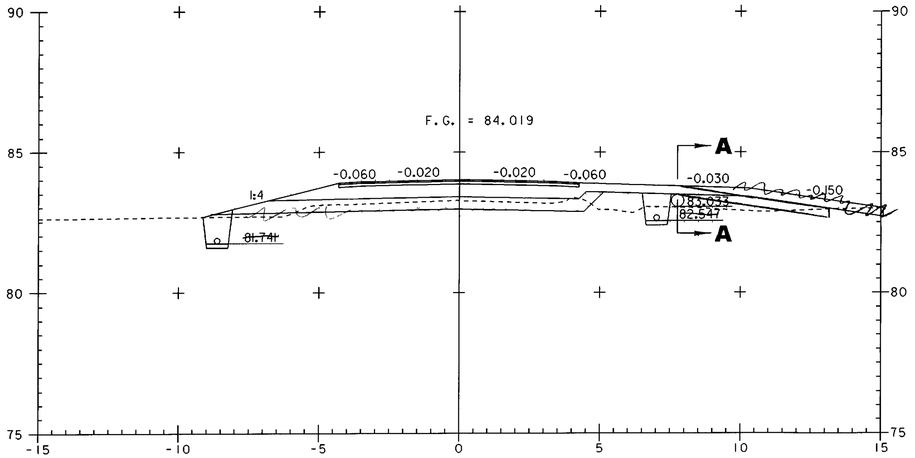

4+125

STA 4+124.560 END TAPER BEGIN FULL DEPTH SAND (450MM)
STA 4+122.940 BEGIN TAPER

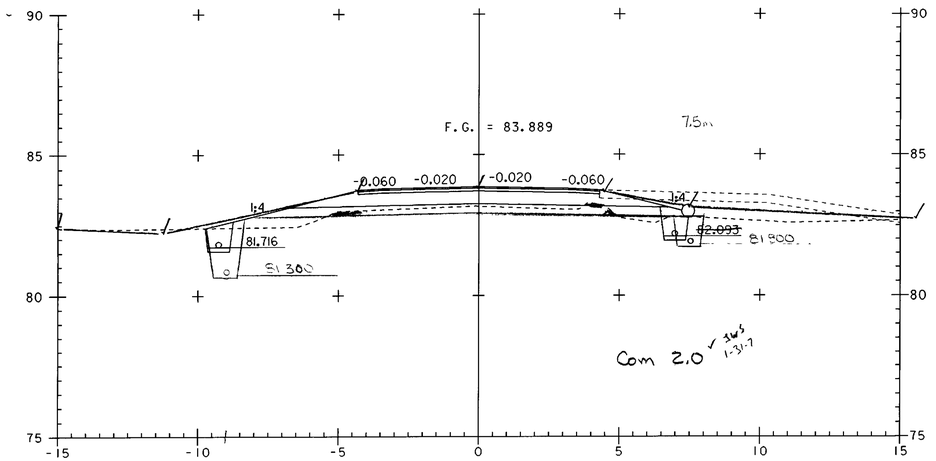

4+120 END FULL DEPTH SAND (300MM)
BEGIN TAPER

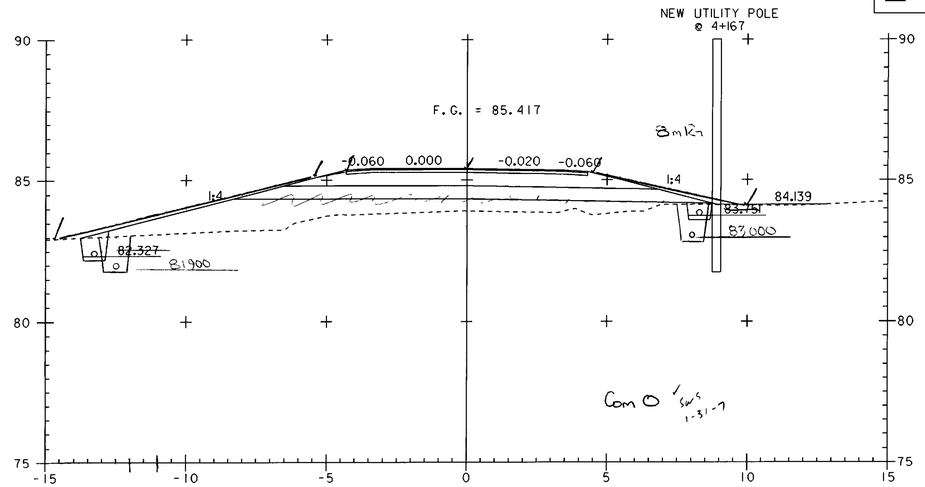

4+160

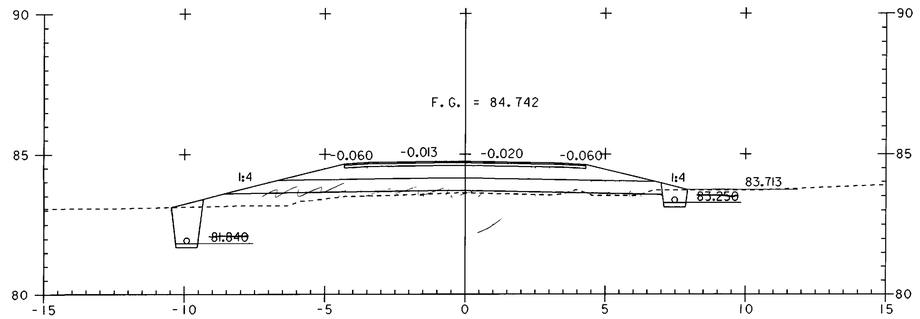

4+145

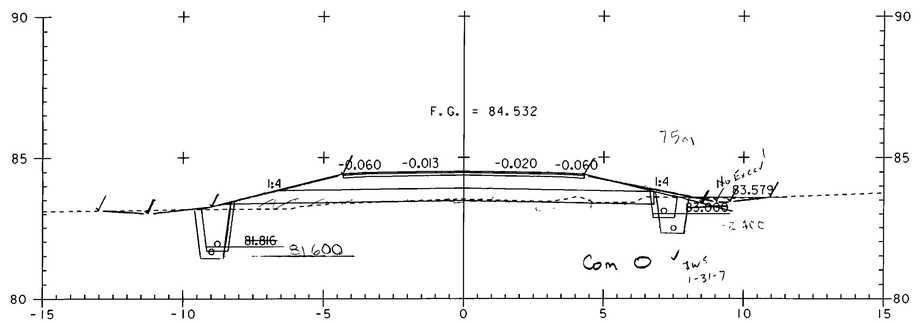

4+140 END TAPER

0 2 4 6 8 10
SCALE IN METERS

PROJECT NAME:	HIGHGATE - FRANKLIN
PROJECT NUMBER:	STP RS 0301(1) SA
FILE NAME: ...85c060\design\dc060x06.dgn	PLOT DATE: 09-MAY-2005
PROJECT LEADER: DELLASANTA	DRAWN BY: SQUAD B
DESIGNED BY: SQUAD B	CHECKED BY: SQUAD B
IPARM FILE NAME: dc060x061.i	SHEET 337 OF 450

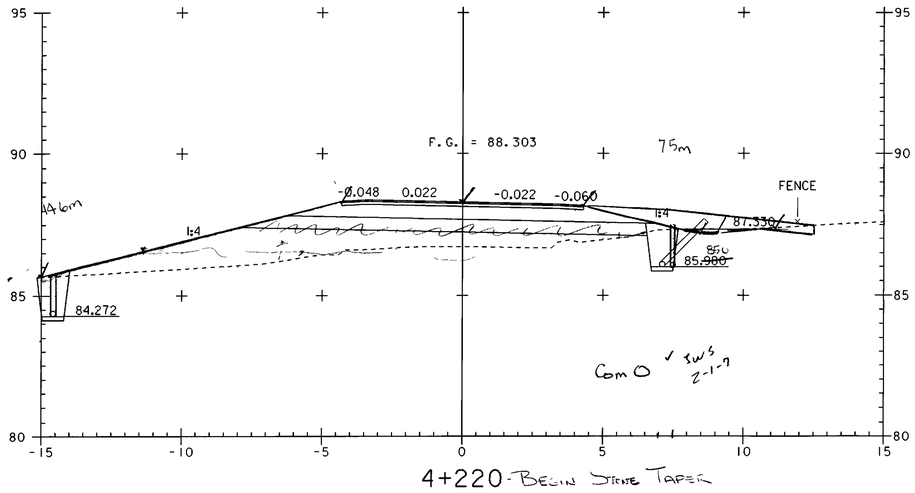

4+220 - BEGIN STONE TAPER

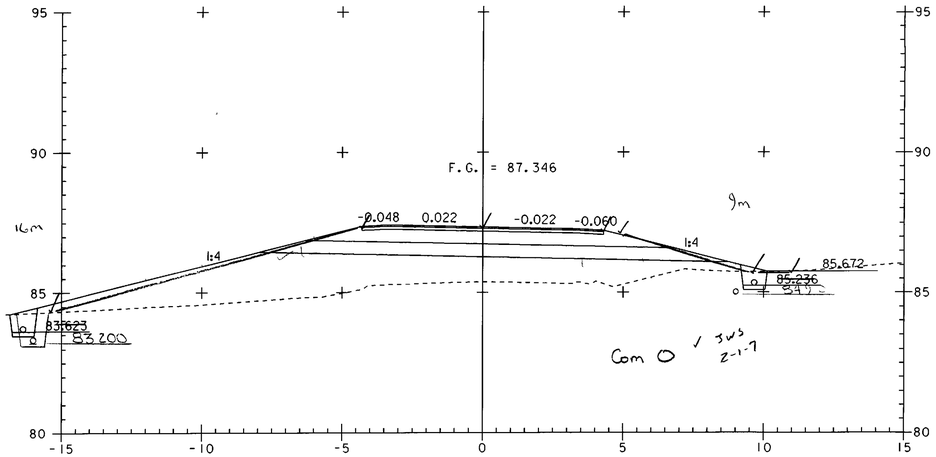

4+200

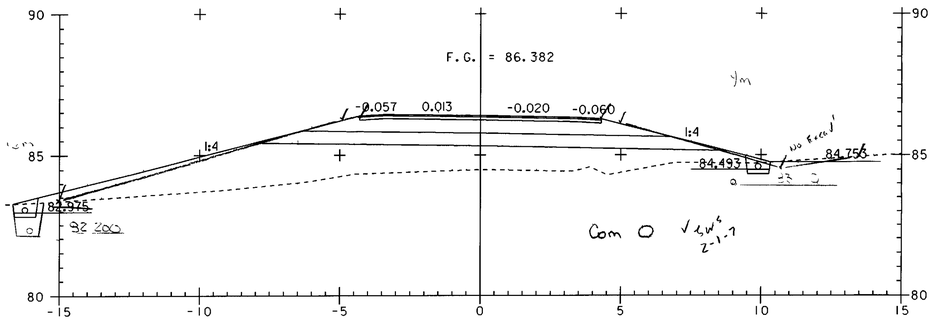

4+180

0 2 4 6 8 10
SCALE IN METERS

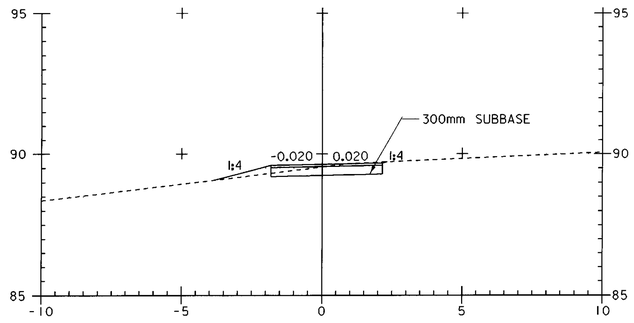

DRIVE AT 4+255 LT
A - A

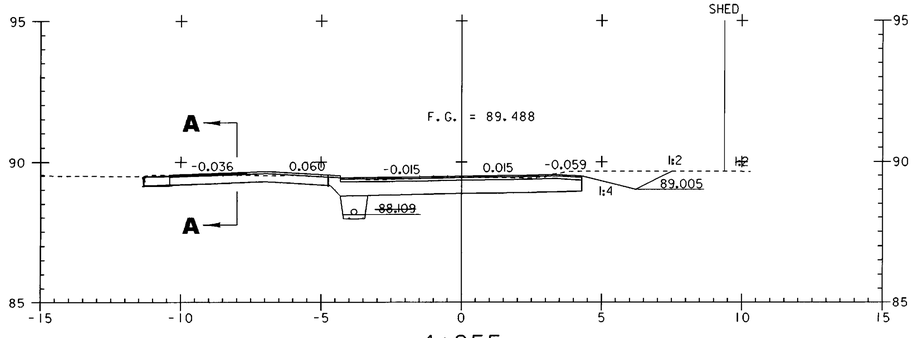

4+255

STA 4+240.060 END TAPER

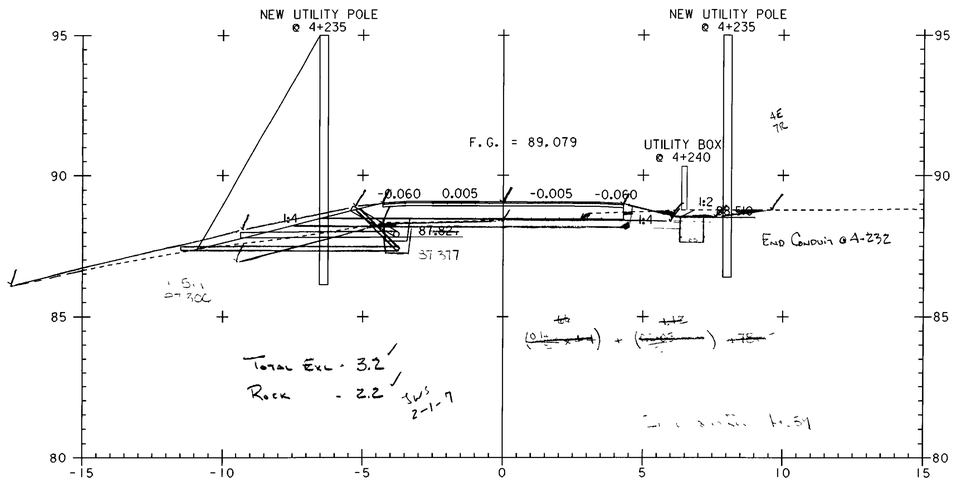

4+240

STA ~~4+237.980 END~~ FULL DEPTH ~~SAND~~ (~~450~~MM) ~~BEGIN TAPER~~

PROJECT NAME:	HIGHGATE - FRANKLIN
PROJECT NUMBER:	STP RS 0301(1) SA
FILE NAME: ...85c060\design\dc060x06.dgn	PLOT DATE: 09-MAY-2005
PROJECT LEADER: DELLASANTA	DRAWN BY: SQUAD B
DESIGNED BY: SQUAD B	CHECKED BY: SQUAD B
IPARM FILE NAME: dc060x062.i	SHEET 338 OF 450

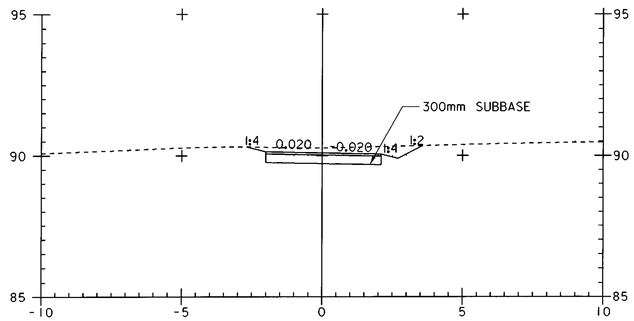

DRIVE AT 4+275 LT
A - A

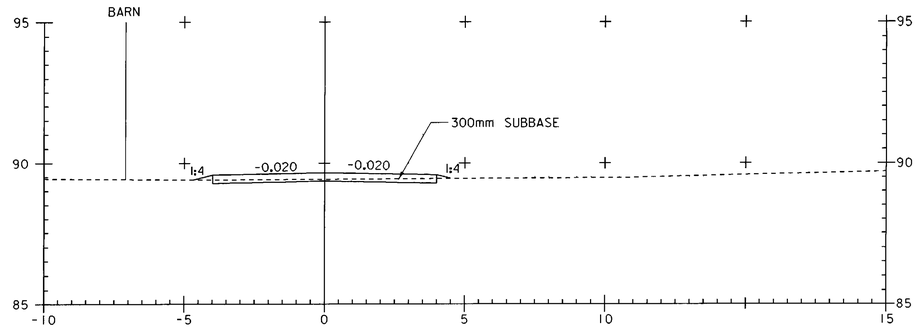

DRIVE AT 4+297 RT
A - A

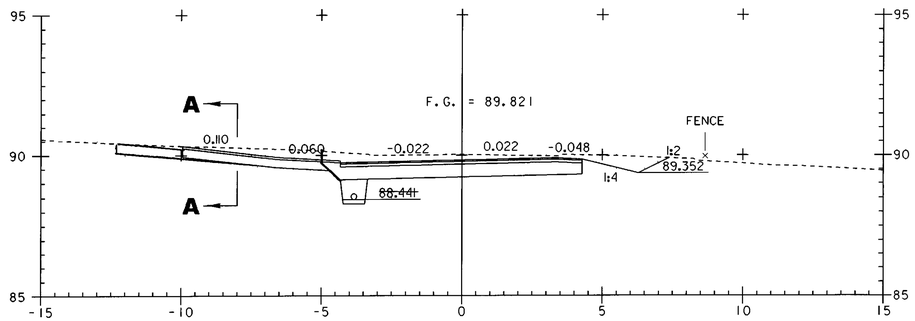

4+275

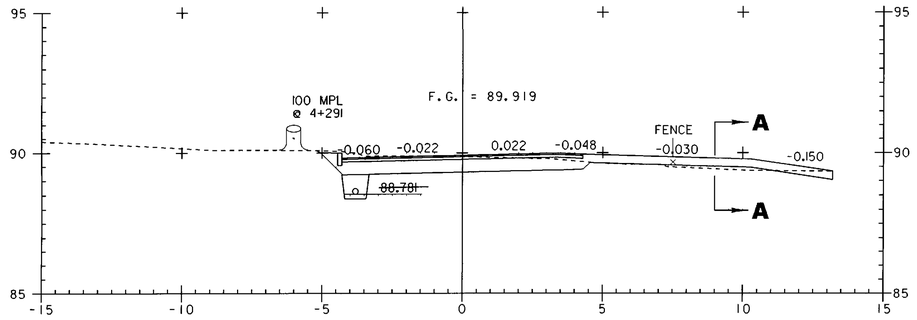

4+297

Conduit - Go to Pipe 4+286.2 (7.4 Rt)
AND THEN CONTINUE UPSTATION

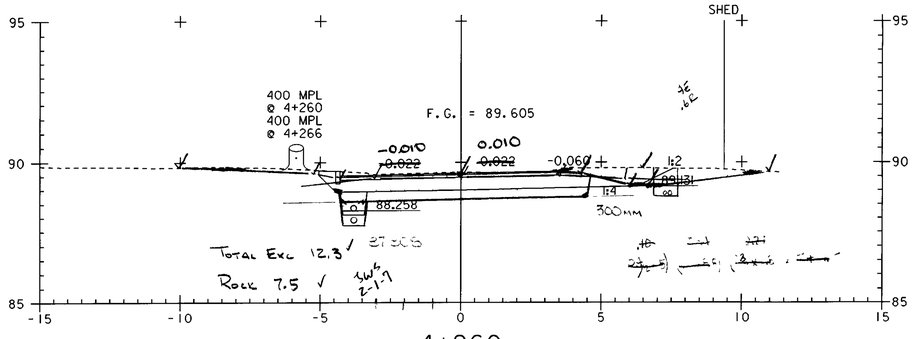

4+260

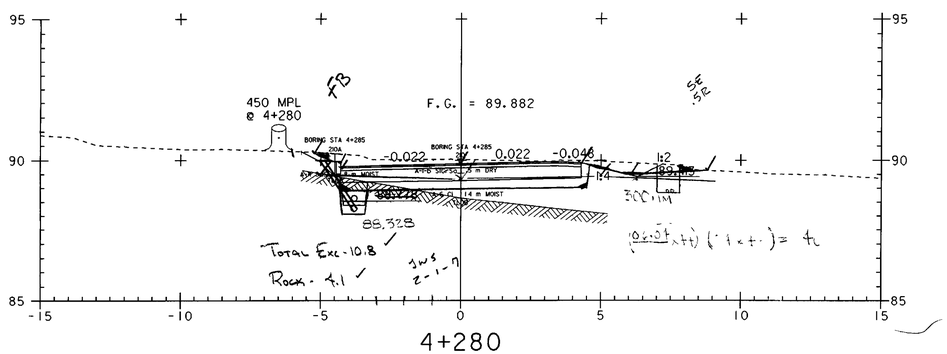

4+280

0 2 4 6 8 10
SCALE IN METERS

PROJECT NAME:	HIGHGATE - FRANKLIN
PROJECT NUMBER:	STP RS 0301(1) SA
FILE NAME: ...85c060\design\dc060x06.dgn	PLOT DATE: 09-MAY-2005
PROJECT LEADER: DELLASANTA	DRAWN BY: SQUAD B
DESIGNED BY: SQUAD B	CHECKED BY: SQUAD B
IPARM FILE NAME: dc060x063.i	SHEET 339 OF 450

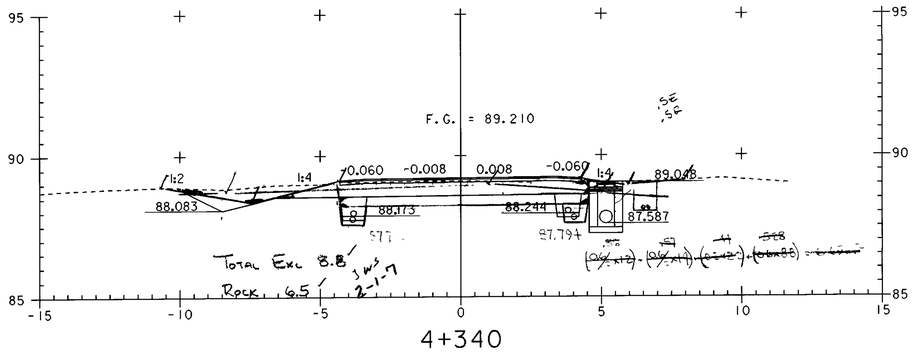

4+340

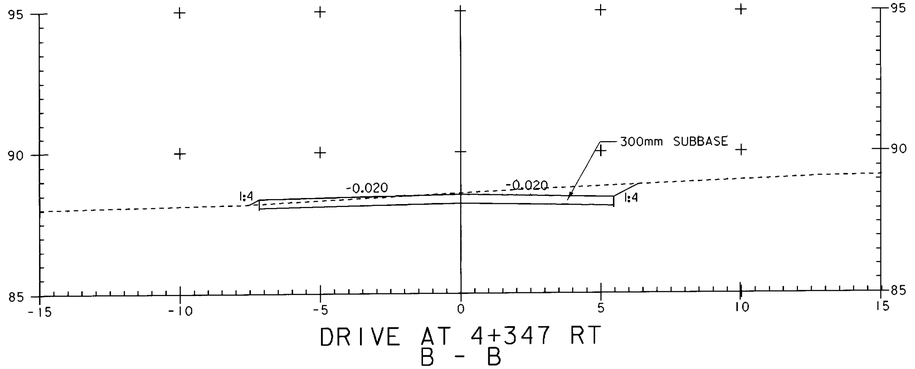

DRIVE AT 4+347 RT
B - B

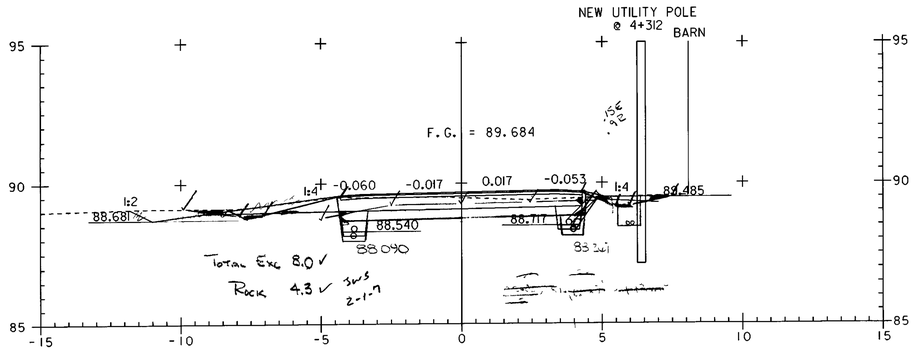

4+320

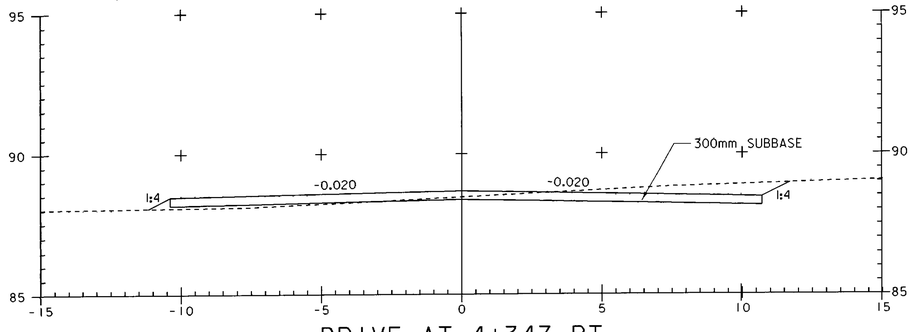

DRIVE AT 4+347 RT
A - A

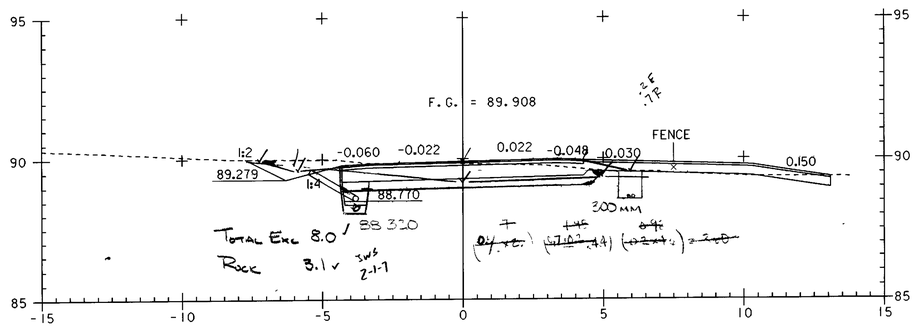

4+300

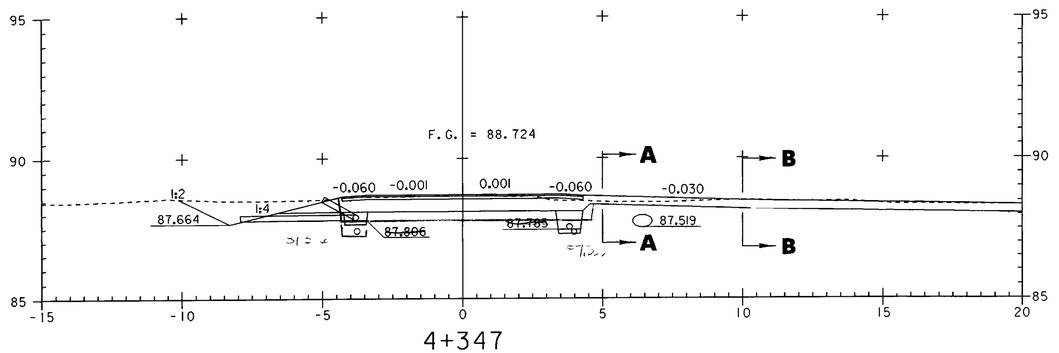

4+347

0 2 4 6 8 10
SCALE IN METERS

PROJECT NAME:	HIGHGATE - FRANKLIN
PROJECT NUMBER:	STP RS 0301(I) SA
FILE NAME: ...85c060\design\dc060x06.dgn	PLOT DATE: 09-MAY-2005
PROJECT LEADER: DELLASANTA	DRAWN BY: SQUAD B
DESIGNED BY: SQUAD B	CHECKED BY: SQUAD B
IPARM FILE NAME: dc060x064.i	SHEET 340 OF 450

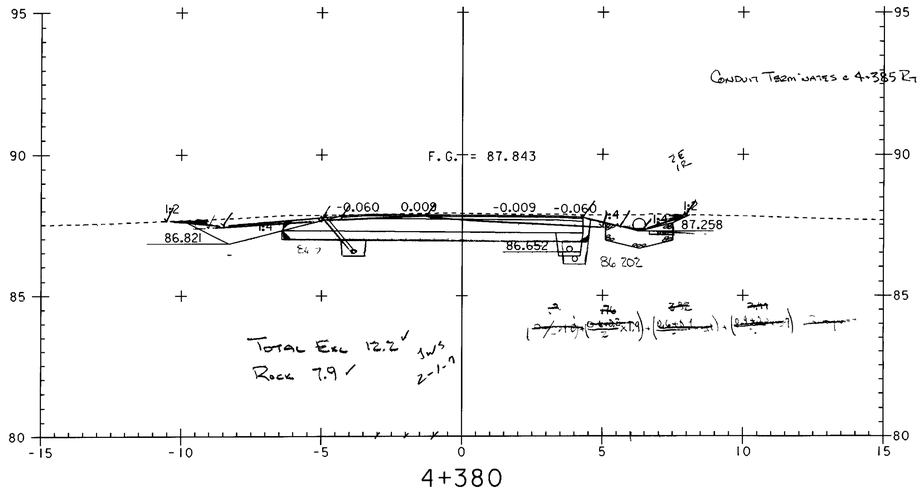

4+380

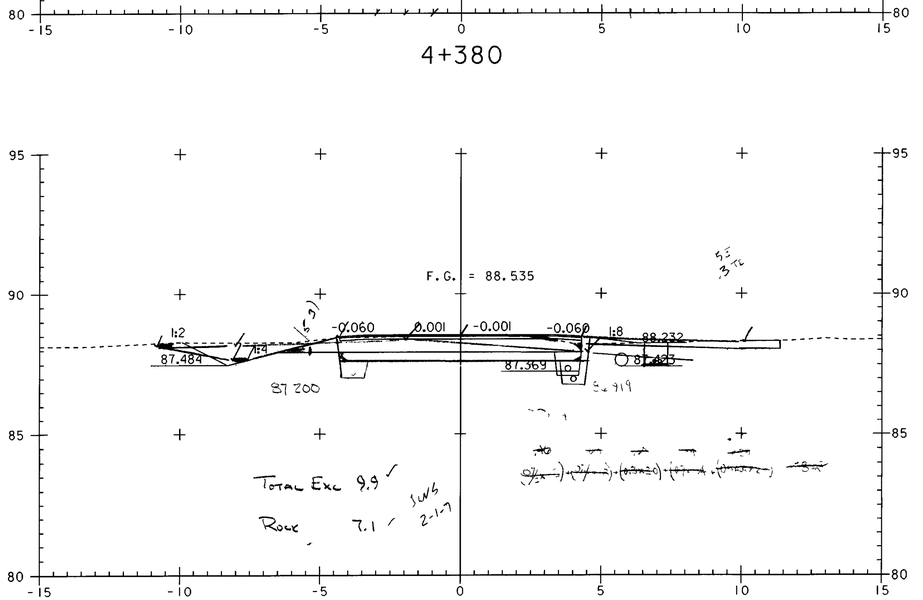

4+360

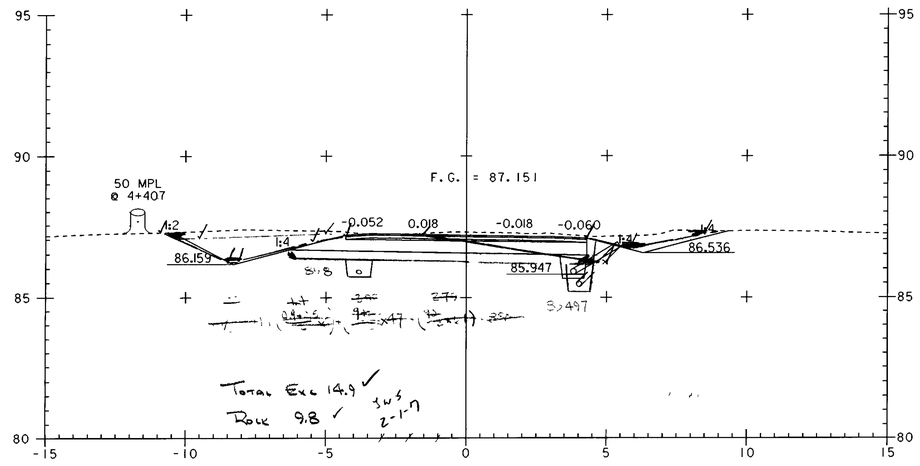

4+400

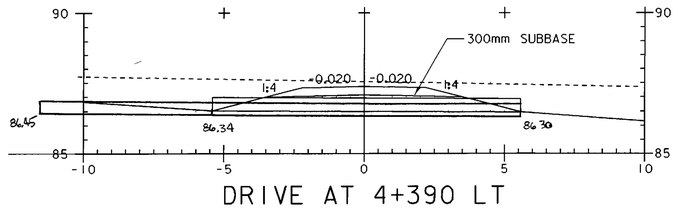

DRIVE AT 4+390 LT
A - A

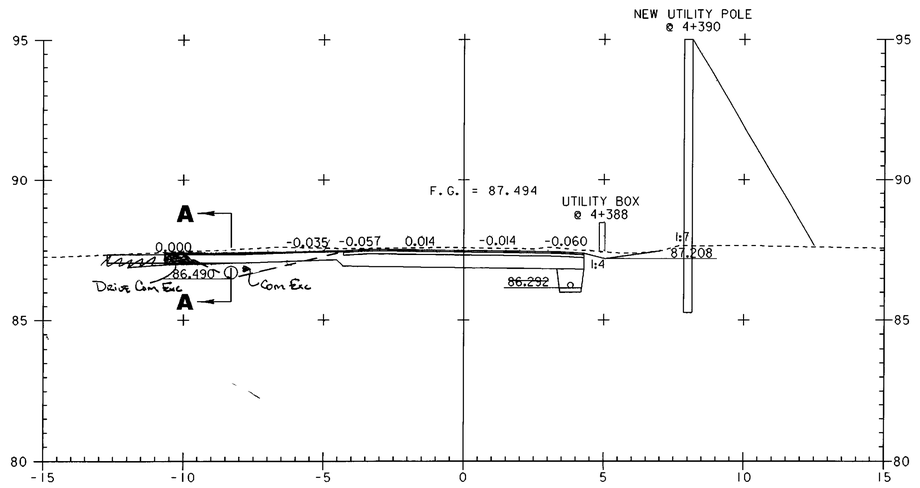

4+390

0 2 4 6 8 10
SCALE IN METERS

PROJECT NAME:	HIGHGATE - FRANKLIN
PROJECT NUMBER:	STP RS 0301(I) SA
FILE NAME: ...85c060\design\dc060x06.dgn	PLOT DATE: 09-MAY-2005
PROJECT LEADER: DELLASANTA	DRAWN BY: SQUAD B
DESIGNED BY: SQUAD B	CHECKED BY: SQUAD B
IPARM FILE NAME: dc060x065.i	SHEET 341 OF 450

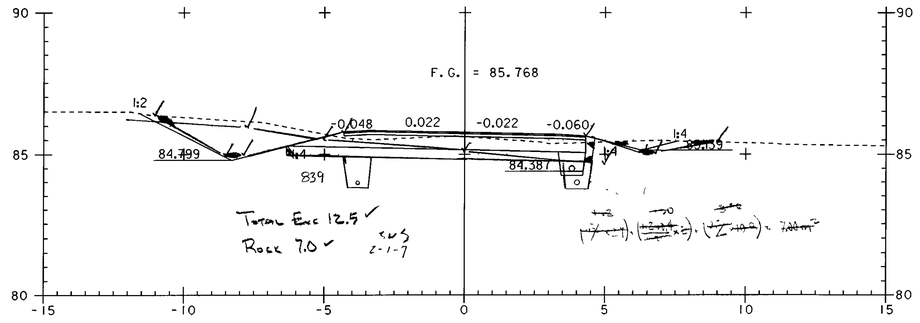

4+440

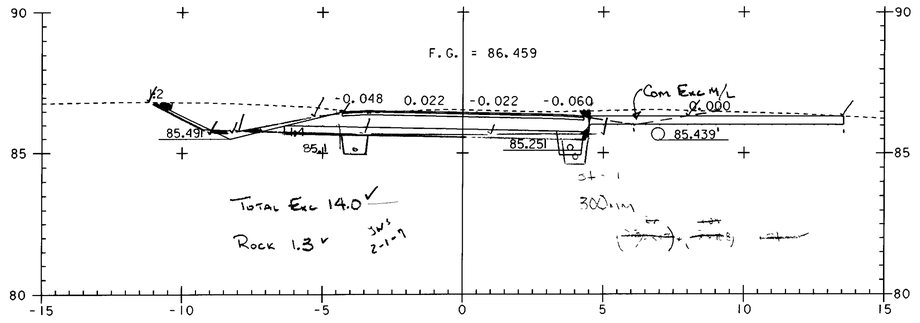

4+420

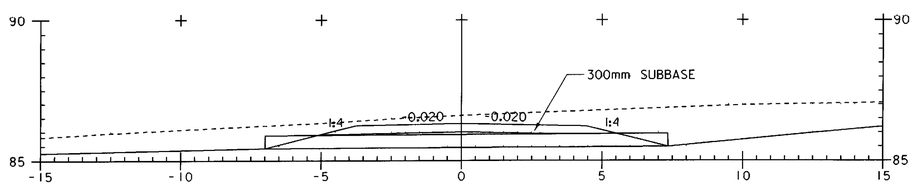

DRIVE AT 4+417 RT
A - A

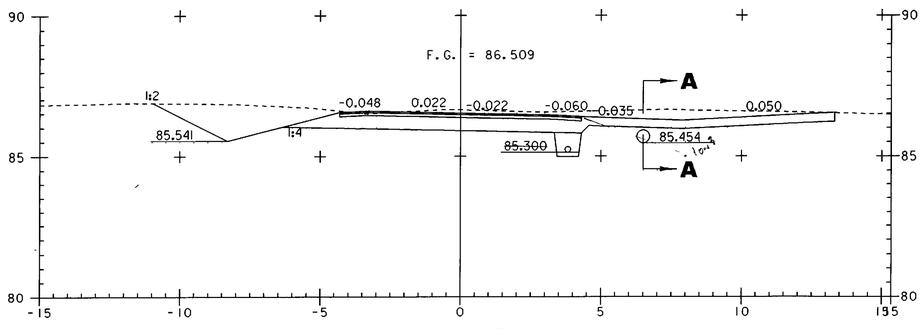

4+417

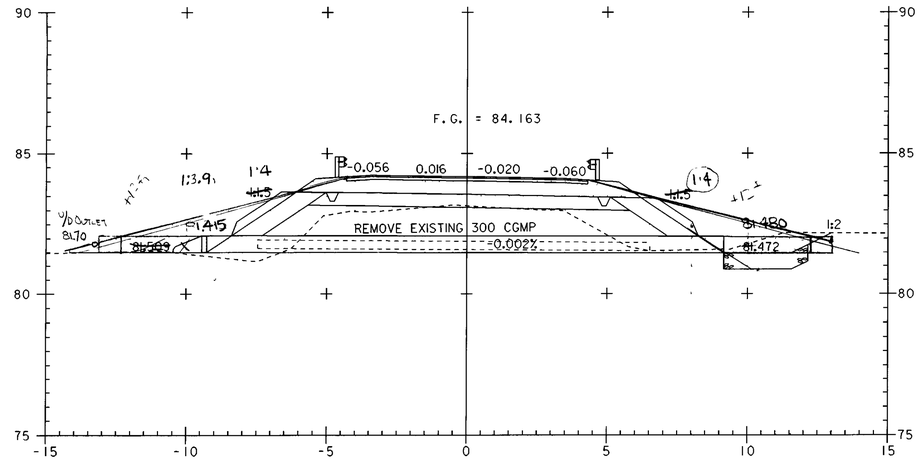

4+492

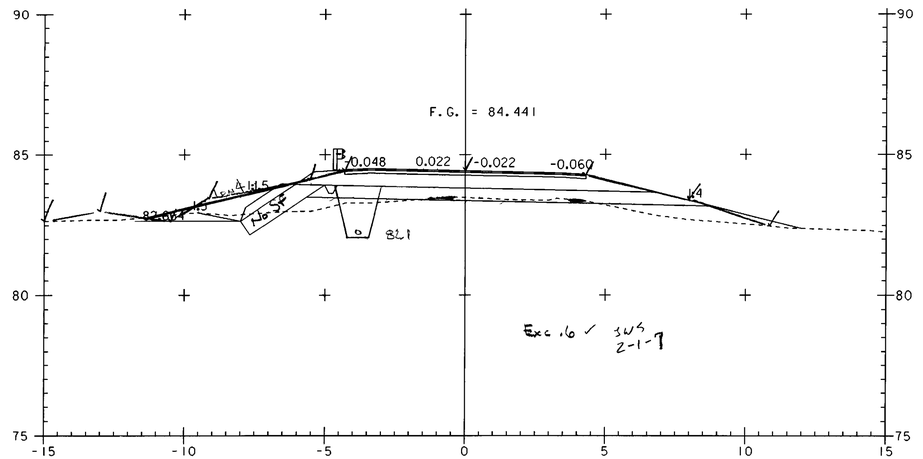

4+480

STA 4+463.960 END TAPER BEGIN FULL DEPTH SAND (450MM)
STA 4+481.860 BEGIN TAPER

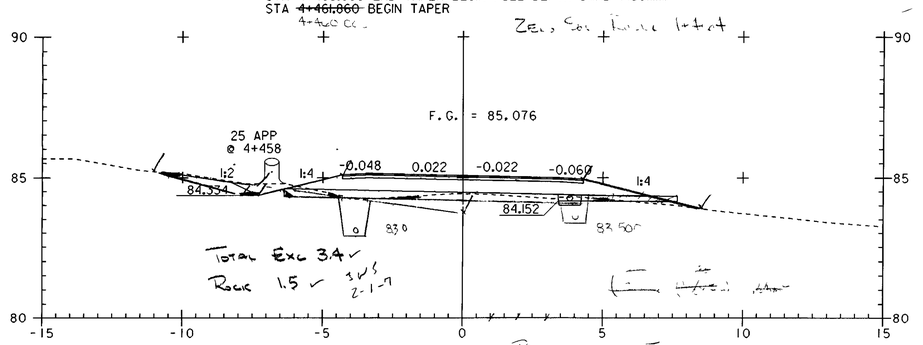

(300mm) 4+460

0 2 4 6 8 10
SCALE IN METERS

PROJECT NAME:	HIGHGATE - FRANKLIN
PROJECT NUMBER:	STP RS 0301(1) SA
FILE NAME: ...85c060\design\dc060x06.dgn	PLOT DATE: 09-MAY-2005
PROJECT LEADER: DELLASANTA	DRAWN BY: SQUAD B
DESIGNED BY: SQUAD B	CHECKED BY: SQUAD B
IPARM FILE NAME: dc060x066.I	SHEET 342 OF 450

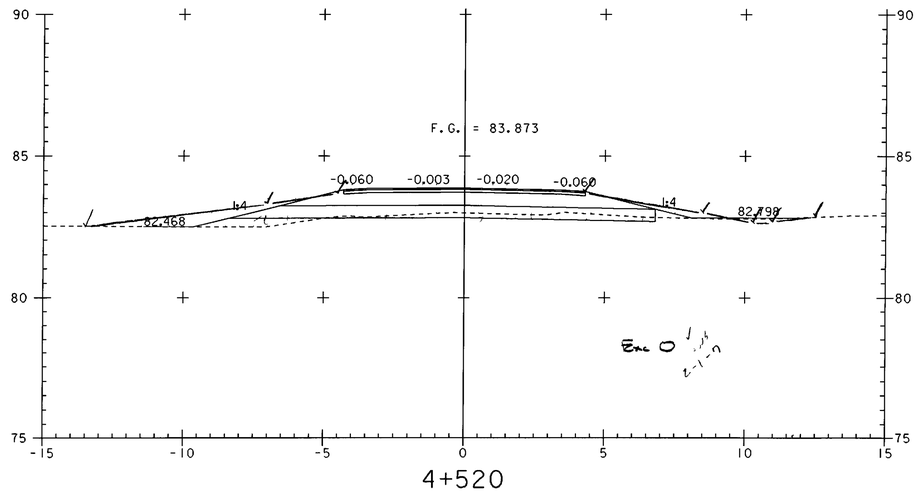

4+520

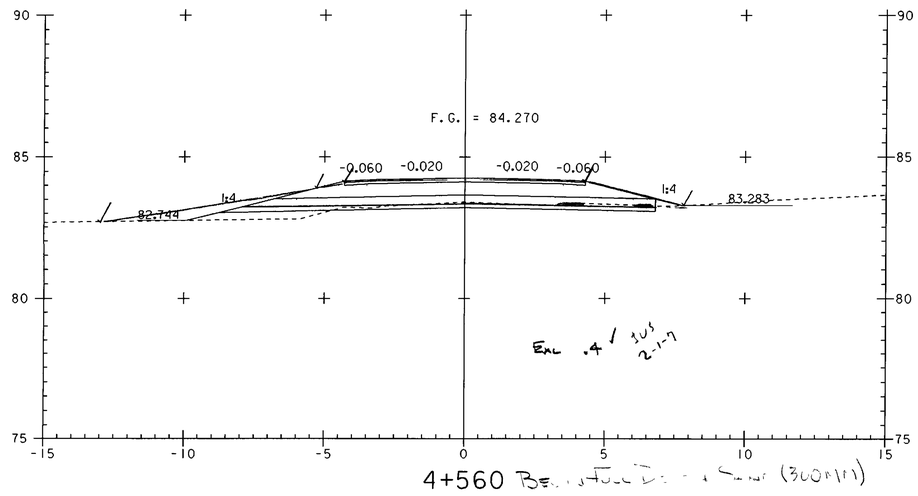

4+560

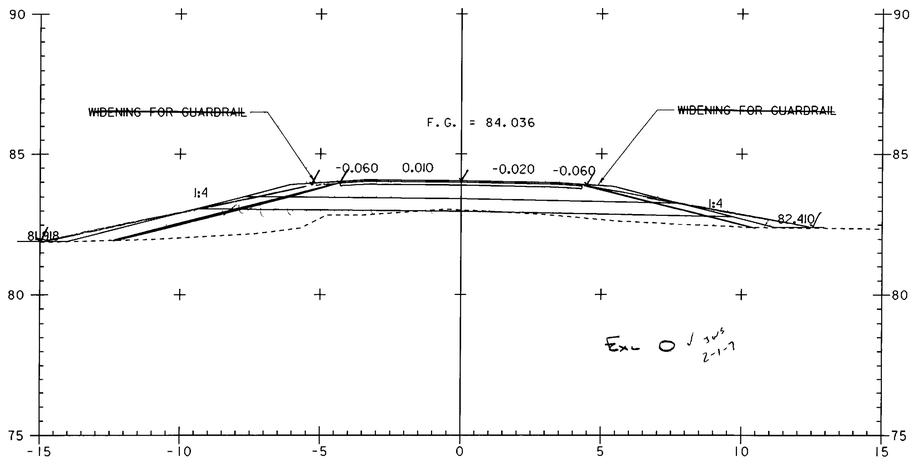

4+500

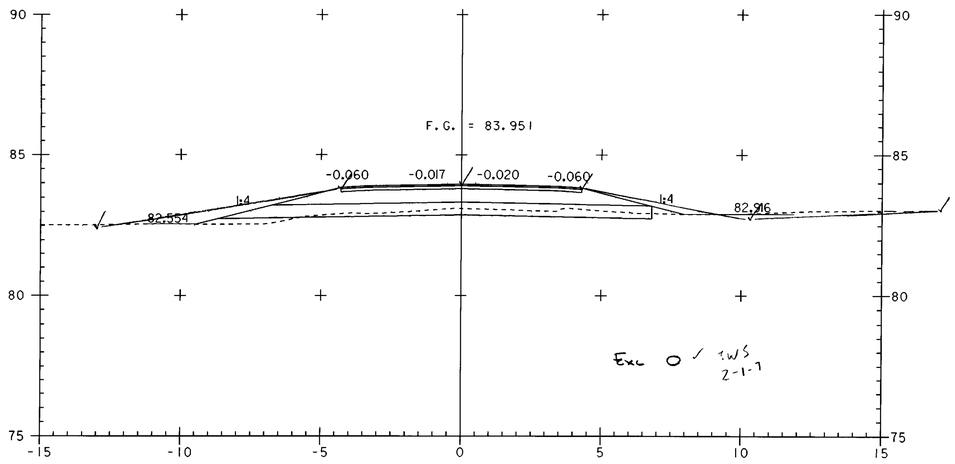

4+540

0 2 4 6 8 10
SCALE IN METERS

PROJECT NAME:	HIGHGATE - FRANKLIN
PROJECT NUMBER:	STP RS 0301(I) SA
FILE NAME: ...85c060\design\dc060x06.dgn	PLOT DATE: 09-MAY-2005
PROJECT LEADER: DELLASANTA	DRAWN BY: SQUAD B
DESIGNED BY: SQUAD B	CHECKED BY: SQUAD B
IPARM FILE NAME: dc060x067.i	SHEET 343 OF 450

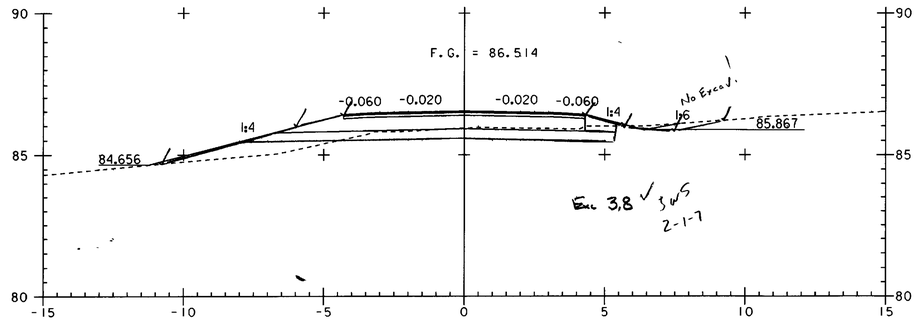

Exc 3.8 ✓ JWS 2-1-7

4+620

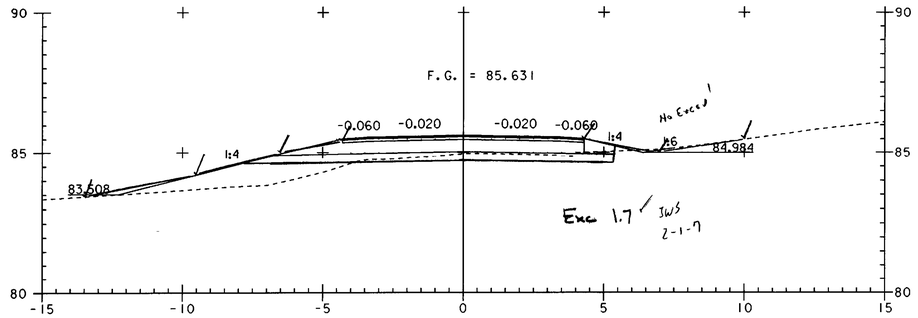

Exc 1.7 ✓ JWS 2-1-7

4+600

~~STA 4+595.800 END TAPER~~
~~STA 4+593.620 END FULL DEPTH SAND (450MM) BEGIN TAPER~~

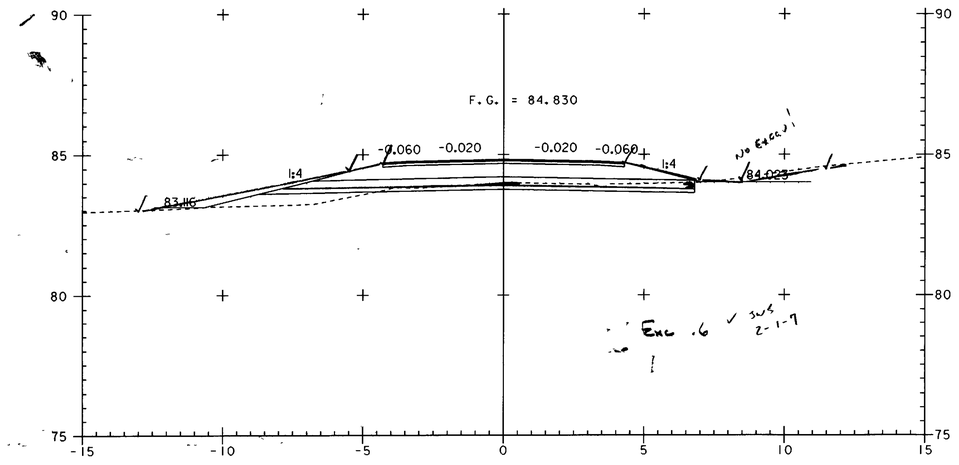

Exc .6 ✓ JWS 2-1-7

4+580

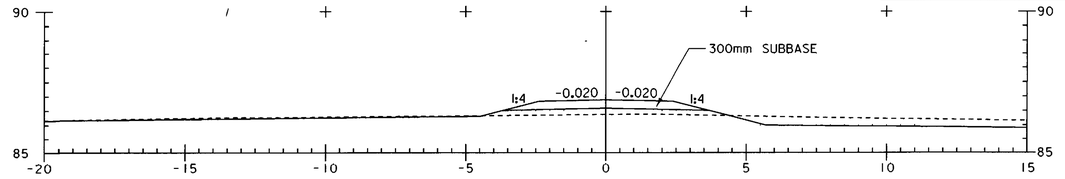

DRIVE @ 4+639 RT
A - A

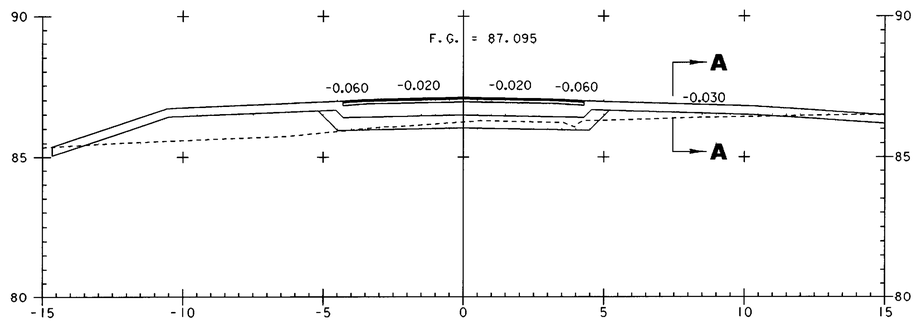

4+639

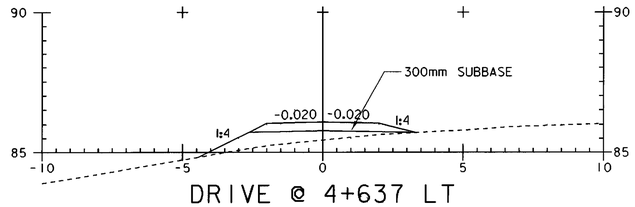

DRIVE @ 4+637 LT
B - B

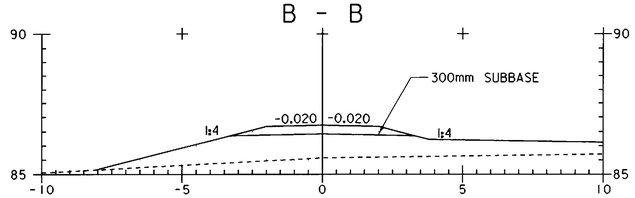

DRIVE @ 4+637 LT
A - A

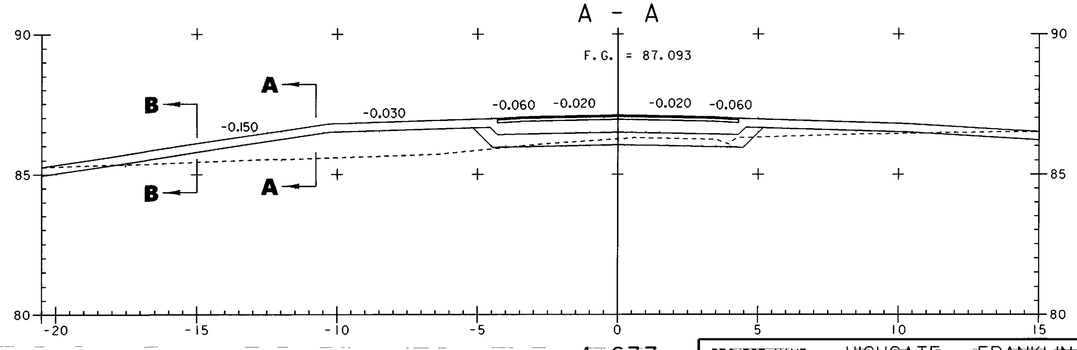

4+637

~~STA 4+632.500 END TAPER BEGIN FULL DEPTH SAND (450MM)~~
~~STA 4+630.890 BEGIN TAPER~~

0 2 4 6 8 10
SCALE IN METERS

PROJECT NAME:	HIGHGATE - FRANKLIN
PROJECT NUMBER:	STP RS 0301(I) SA
FILE NAME: ...85c060\design\dc060x06.dgn	PLOT DATE: 09-MAY-2005
PROJECT LEADER: DELLASANTA	DRAWN BY: SQUAD B
DESIGNED BY: SQUAD B	CHECKED BY: SQUAD B
IPARM FILE NAME: dc060x068.i	SHEET 344 OF 450

MTO Metric

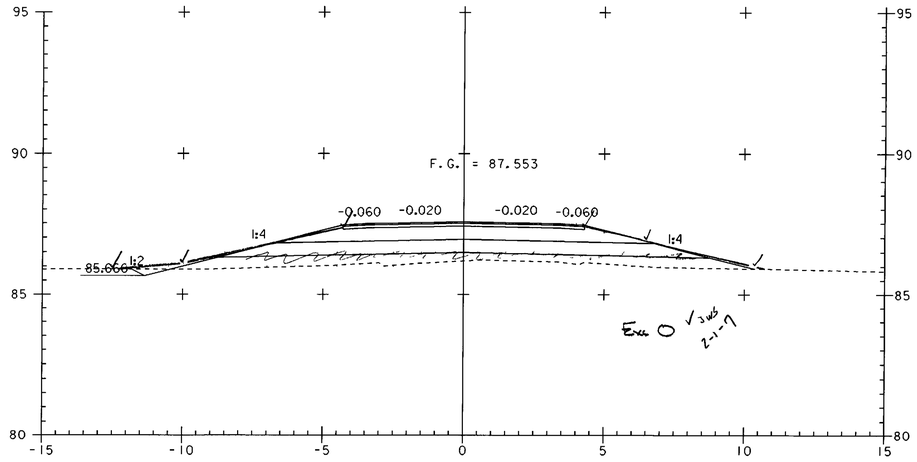

4+680

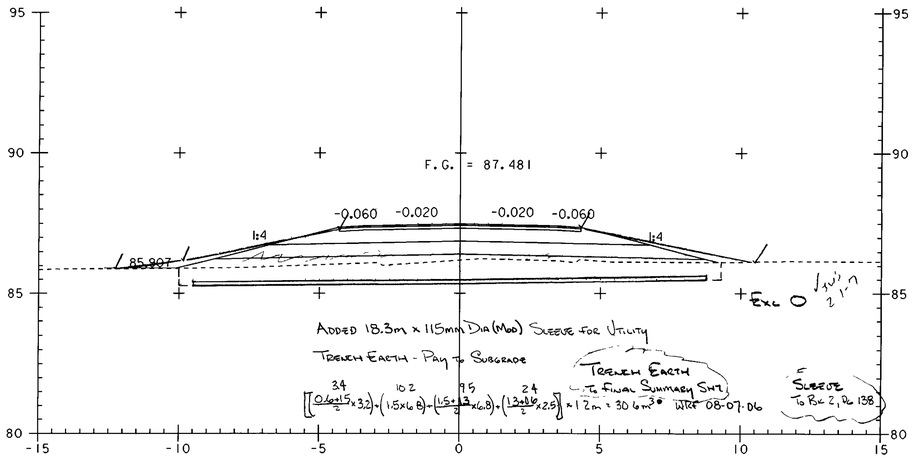

4+660 END SAND TAPER

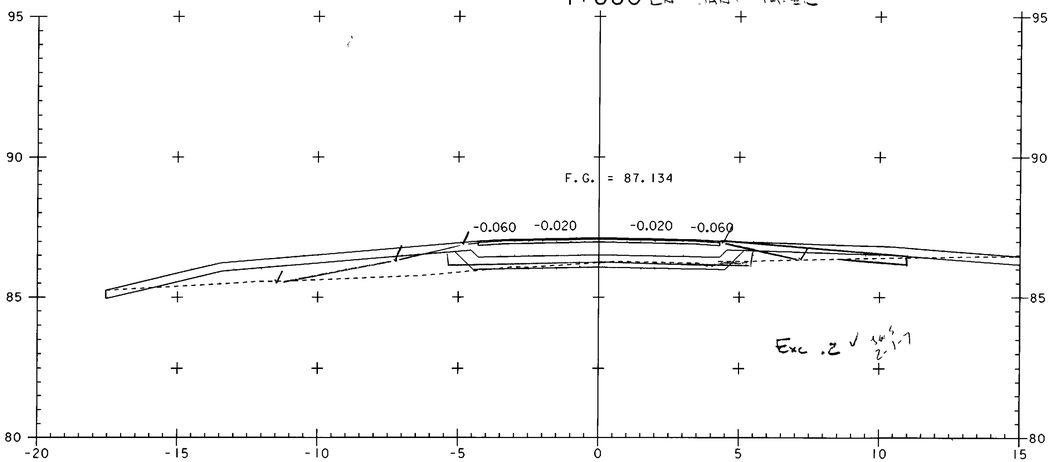

4+640 END FULL DEPTH SAND (300MM)
BEGIN TAPER

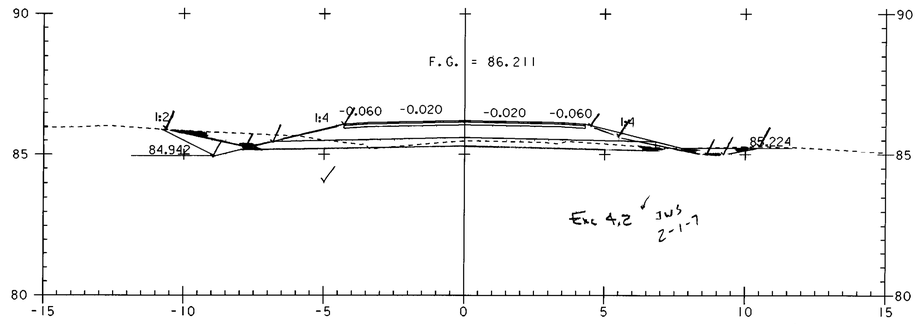

4+740 END FULL DEPTH SAND (300MM)
BEGIN TAPER

~~4+730~~
~~STA 4+723.210 END TAPER~~
~~STA 4+721.620 END FULL DEPTH SAND (450MM) BEGIN TAPER~~

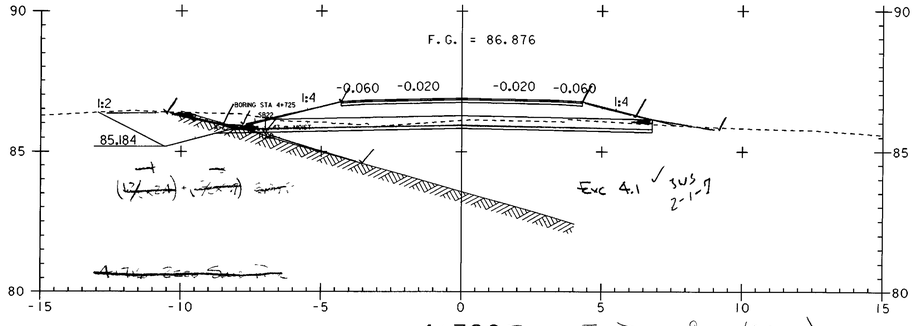

4+720 BEGIN FULL DEPTH SAND (300MM)

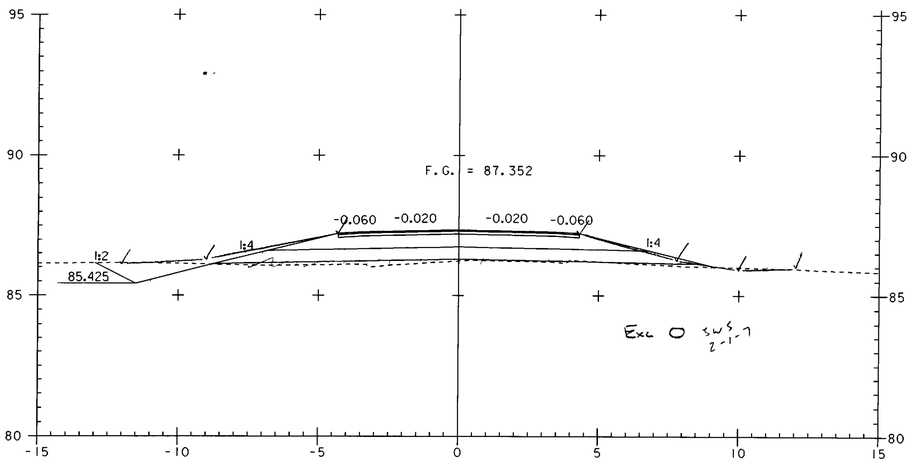

4+700 P...

0 2 4 6 8 10
SCALE IN METERS

PROJECT NAME:	HIGHGATE - FRANKLIN
PROJECT NUMBER:	STP RS 0301(1) SA
FILE NAME: ...85c060\design\dc060x06.dgn	PLOT DATE: 09-MAY-2005
PROJECT LEADER: DELLASANTA	DRAWN BY: SQUAD B
DESIGNED BY: SQUAD B	CHECKED BY: SQUAD B
IPARM FILE NAME: dc060x069.i	SHEET 345 OF 450

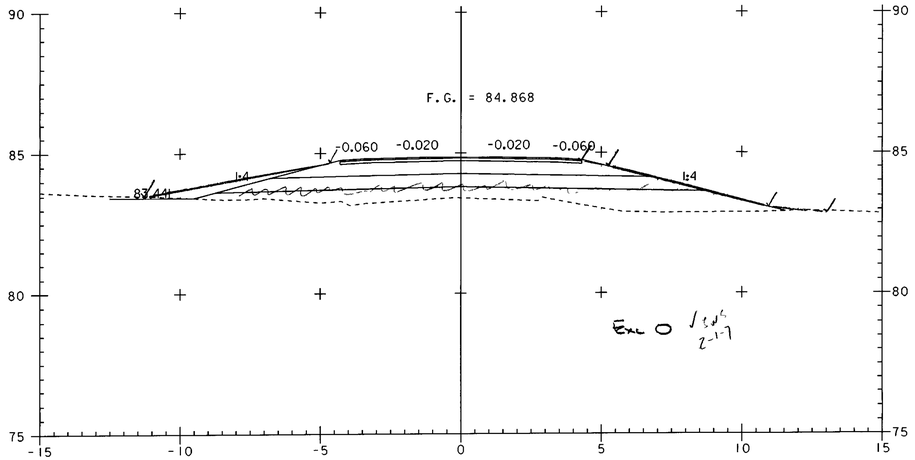

4+780

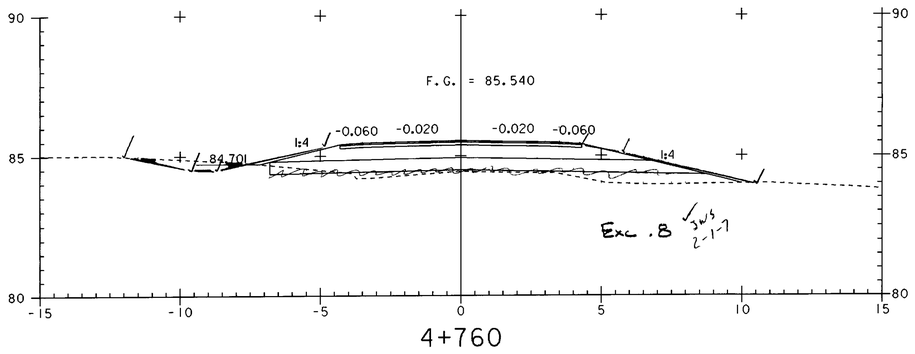

4+760

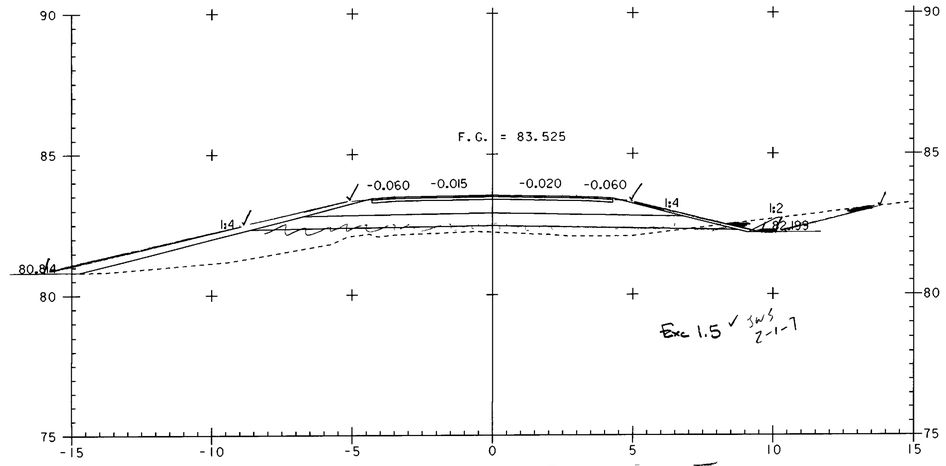

4+820 BEGIN SAND TAPER

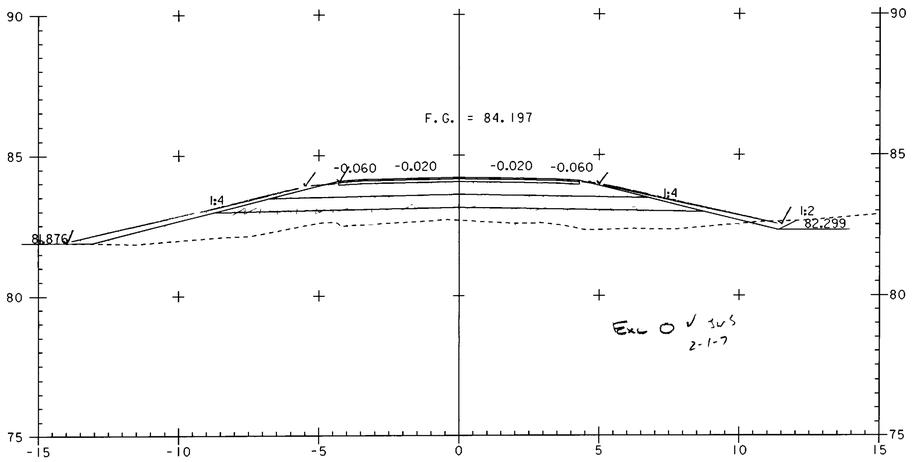

4+800

~~STA 4+743.630~~ END TAPER ~~BEGIN FULL DEPTH SAND (450MM)~~
~~STA 4+741.550 BEGIN TAPER~~

0 2 4 6 8 10
SCALE IN METERS

PROJECT NAME:	HIGHGATE - FRANKLIN
PROJECT NUMBER:	STP RS 0301(1) SA
FILE NAME: ...85c060\design\dc060x06.dgn	PLOT DATE: 09-MAY-2005
PROJECT LEADER: DELLASANTA	DRAWN BY: SQUAD B
DESIGNED BY: SQUAD B	CHECKED BY: SQUAD B
IPARM FILE NAME: dc060x0610.i	SHEET 346 OF 450

STA 4+847.570 END TAPER

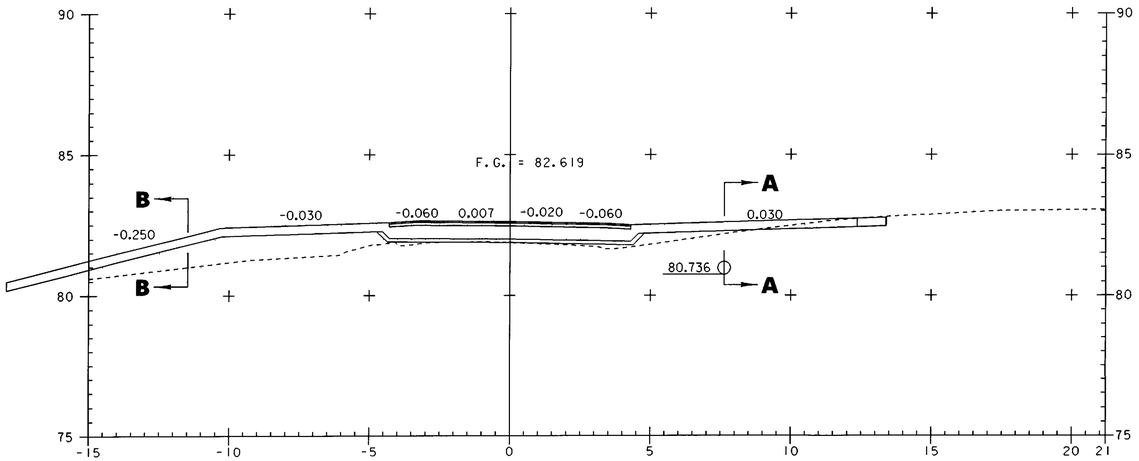

4+847

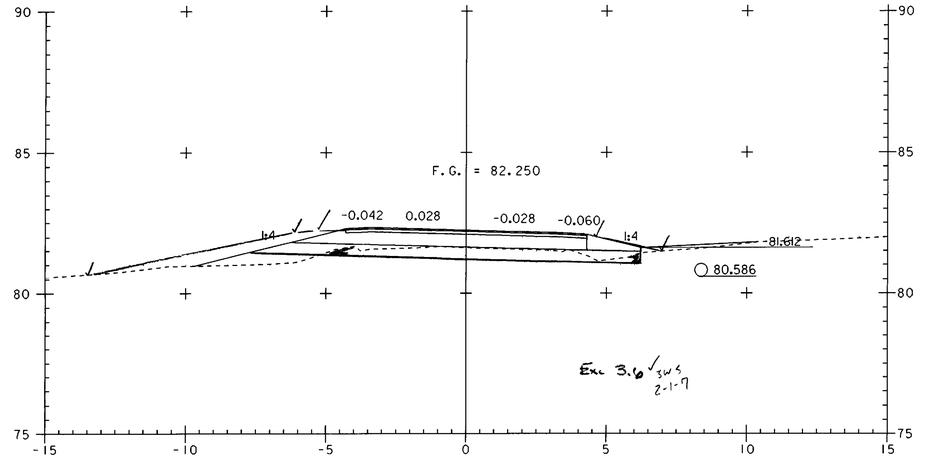

4+860

~~STA 4+845.980 END FULL DEPTH SAND (450MM) BEGIN TAPER~~

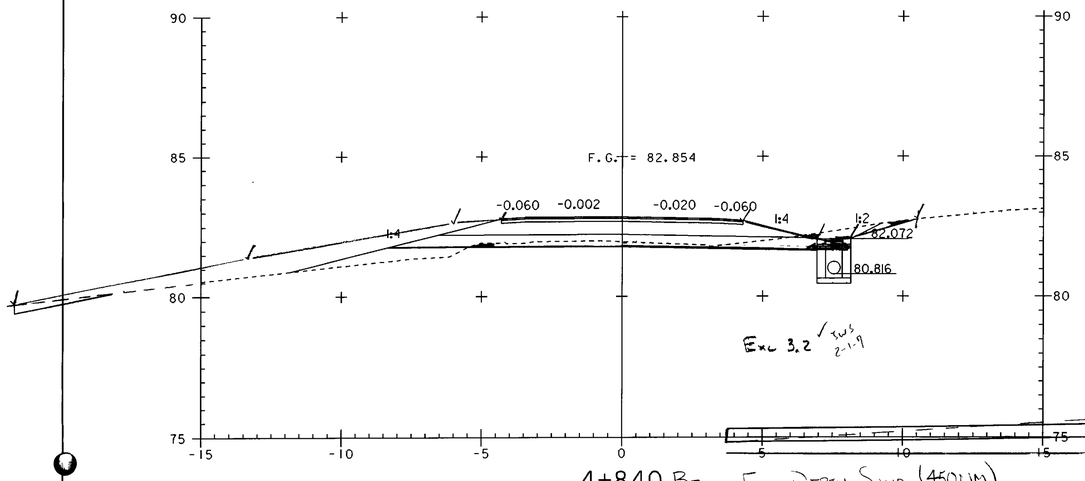

4+840 BEGIN FULL DEPTH SAND (450MM)

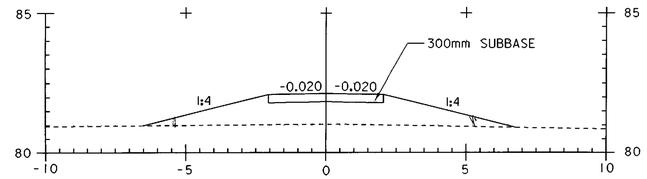

DRIVE AT 4+847 LT
B - B

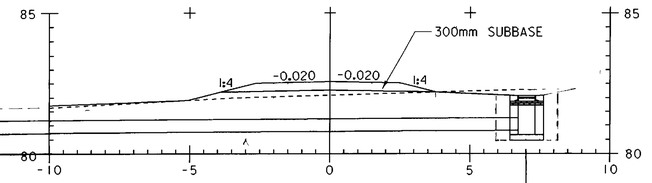

DRIVE AT 4+847 RT
A - A

0 2 4 6 8 10
SCALE IN METERS

PROJECT NAME:	HIGHGATE - FRANKLIN
PROJECT NUMBER:	STP RS 0301(1) SA
FILE NAME: ...85c060\design\dc060x07.dgn	PLOT DATE: 09-MAY-2005
PROJECT LEADER: DELLASANTA	DRAWN BY: SQUAD B
DESIGNED BY: SQUAD B	CHECKED BY: SQUAD B
IPARM FILE NAME: dc060x071.i	SHEET 347 OF 450

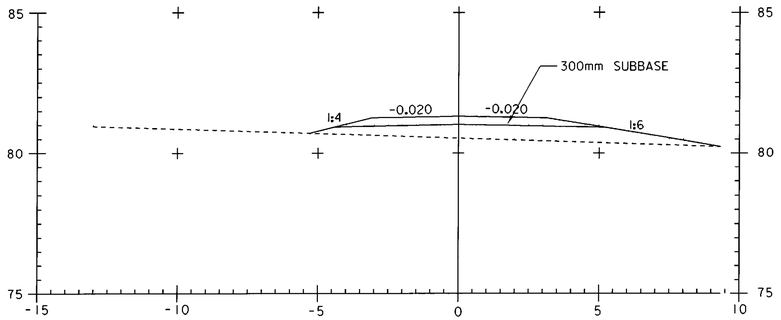

DRIVE AT 4+872 LT
A - A

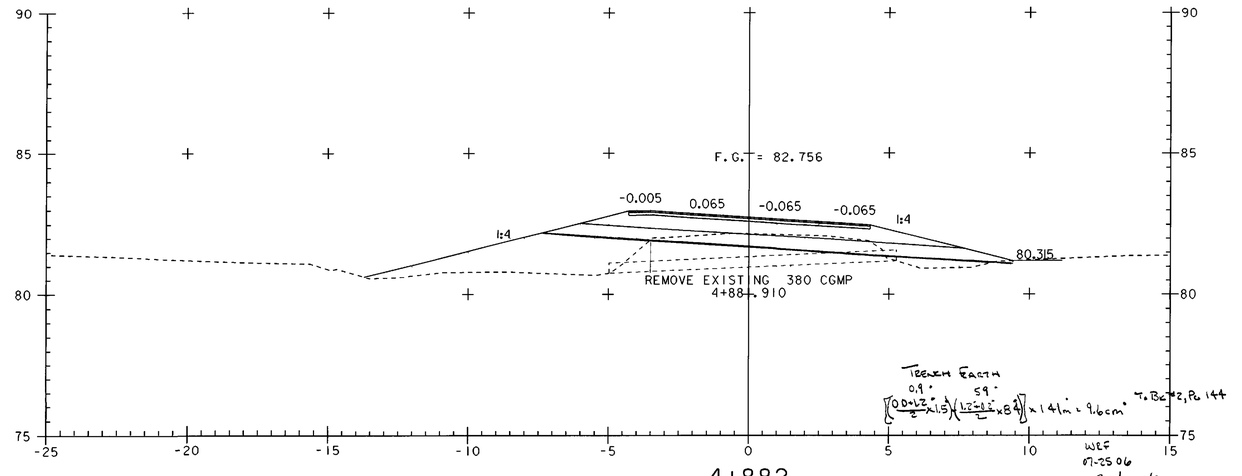

4+882

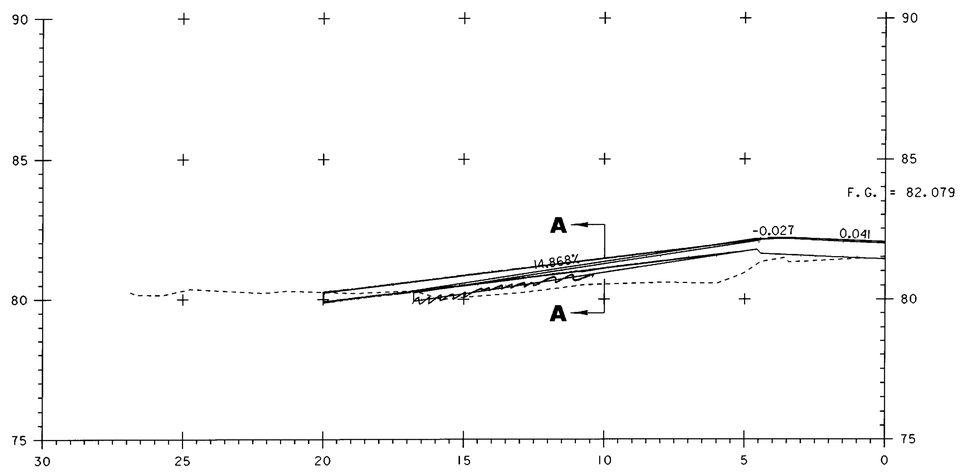

4+872

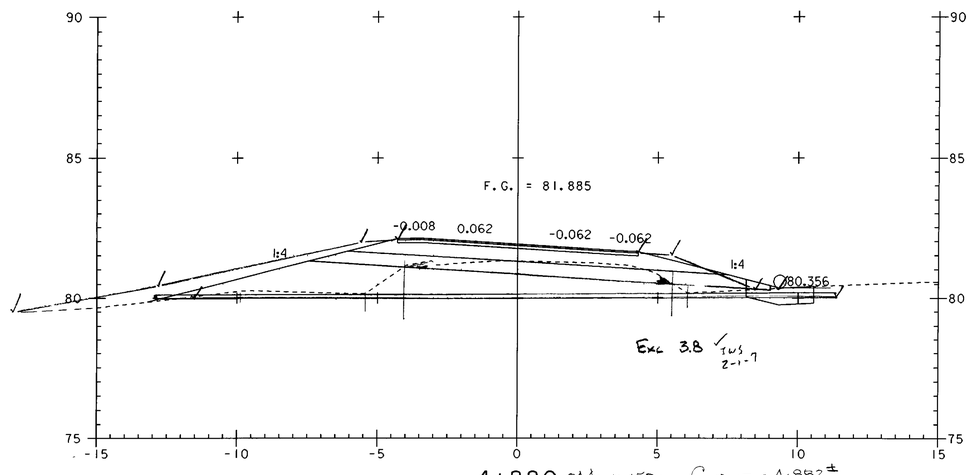

4+880 24 in x 150 mm Conduit @ 4+882±

TRENCH EARTH FOR SLEEVE

.35° .13° .91° .768° .18° 1.56°

11.81 sm x 1.18 m = 14 cm WRF 07-25-06

0 2 4 6 8 10
SCALE IN METERS

PROJECT NAME: HIGHGATE - FRANKLIN	
PROJECT NUMBER: STP RS 0301(1) SA	
FILE NAME: ...85c060\design\dc060x07.dgn	PLOT DATE: 09-MAY-2005
PROJECT LEADER: DELLASANTA	DRAWN BY: SQUAD B
DESIGNED BY: SQUAD B	CHECKED BY: SQUAD B
IPARM FILE NAME: dc060x072.i	SHEET 348 OF 450

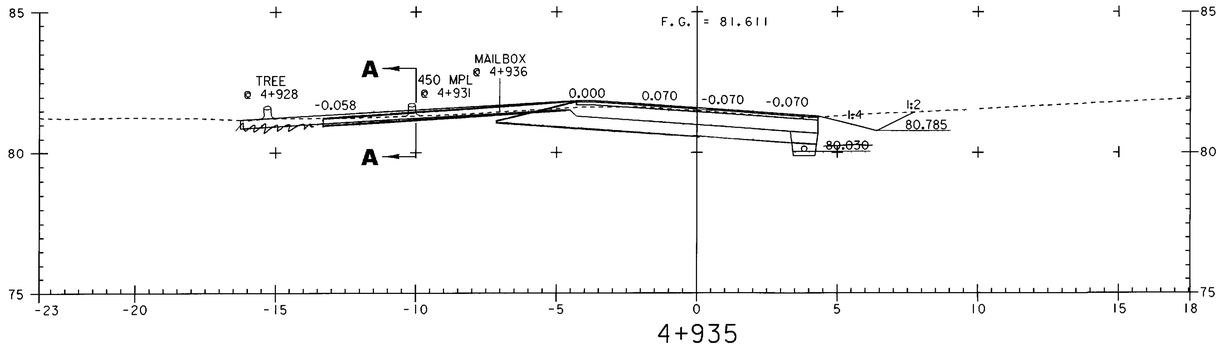

4+935

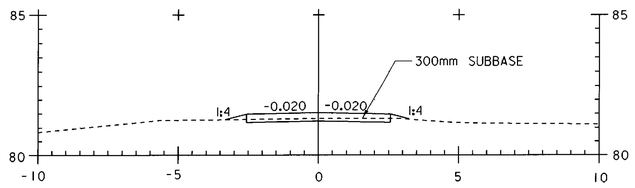

DRIVE @ 4+935 LT
A - A

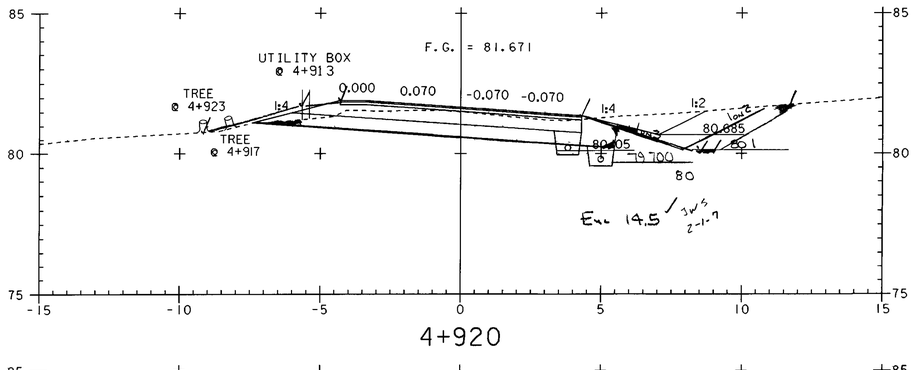

4+920

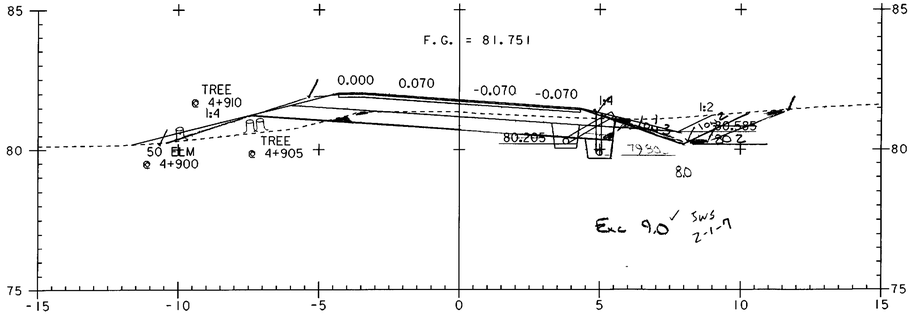

4+900

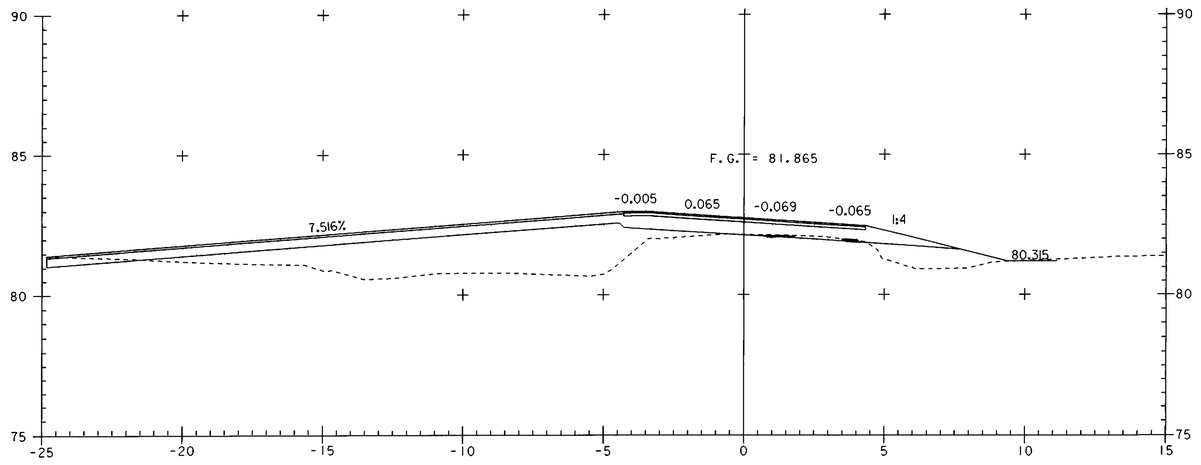

4+870

0 2 4 6 8 10
SCALE IN METERS

PROJECT NAME:	HIGHGATE - FRANKLIN
PROJECT NUMBER:	STP RS 0301(1) SA
FILE NAME: ...85c060\design\dc060x07.dgn	PLOT DATE: 09-MAY-2005
PROJECT LEADER: DELLASANTA	DRAWN BY: SQUAD B
DESIGNED BY: SQUAD B	CHECKED BY: SQUAD B
IPARM FILE NAME: dc060x073.i	SHEET 349 OF 450

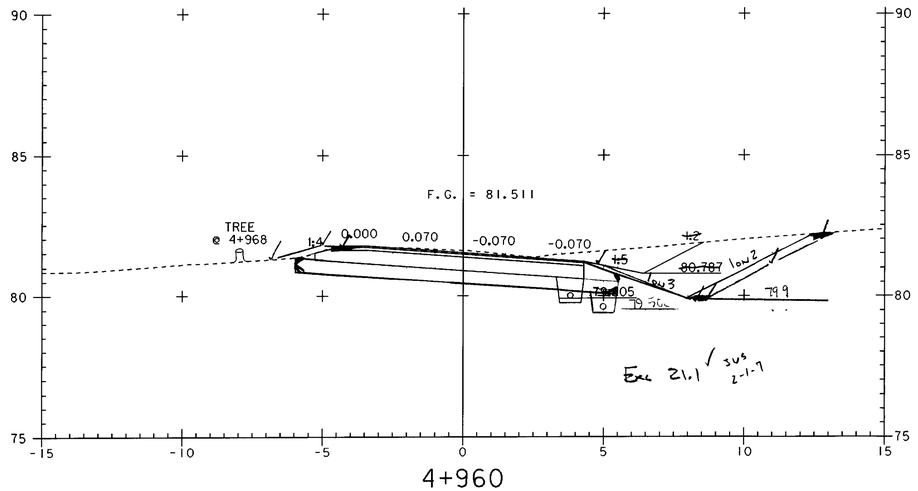

4+960

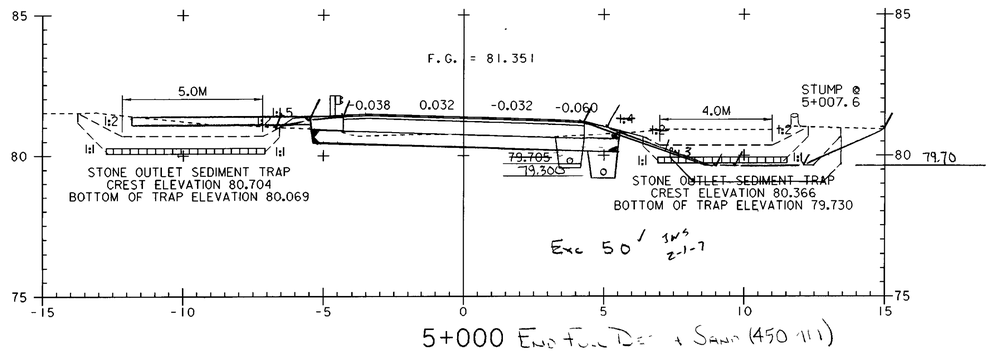

5+000 End Full Depth Sand (450 m)
Begin Trench

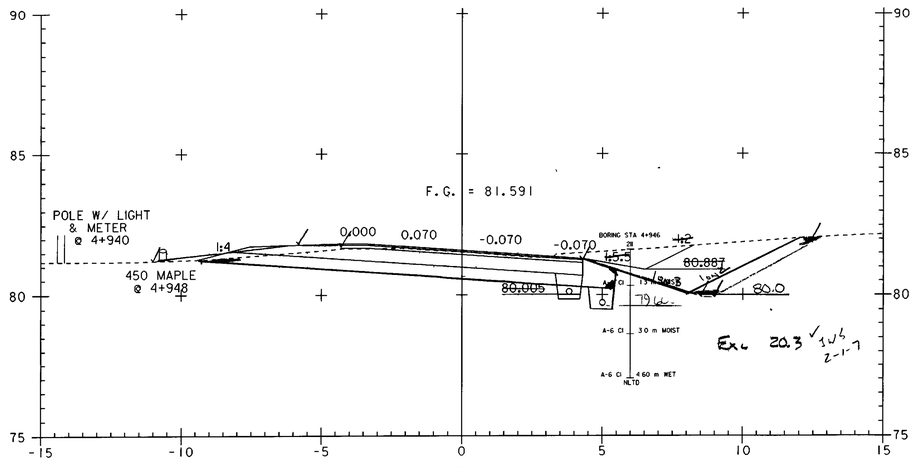

4+940

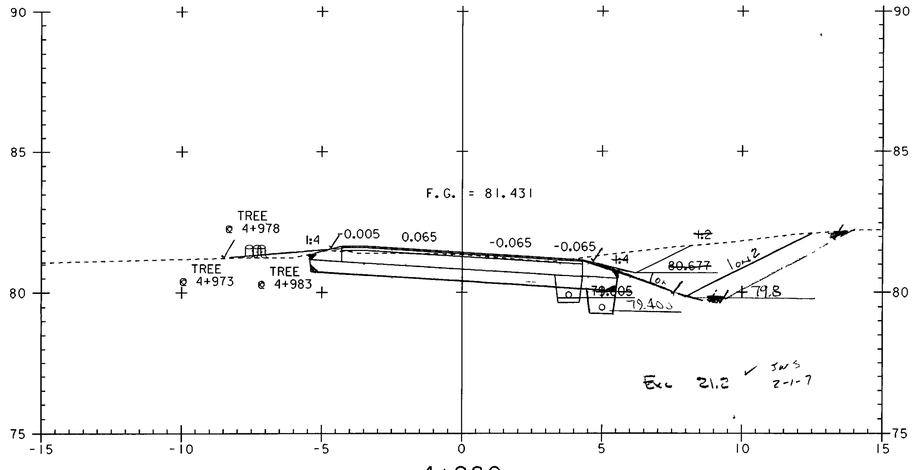

4+980

0 2 4 6 8 10
SCALE IN METERS

PROJECT NAME:	HIGHGATE - FRANKLIN
PROJECT NUMBER:	STP RS 0301(I) SA
FILE NAME: ...85c060\design\dc060x07.dgn	PLOT DATE: 09-MAY-2005
PROJECT LEADER: DELLASANTA	DRAWN BY: SQUAD B
DESIGNED BY: SQUAD B	CHECKED BY: SQUAD B
IPARM FILE NAME: dc060x074.i	SHEET 350 OF 450

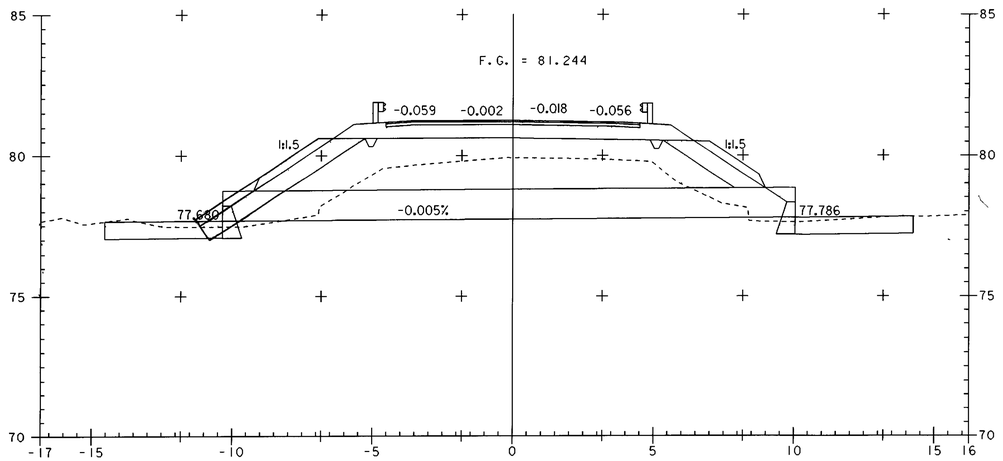

5+027

ASKEW = 72° 22' 16" LT

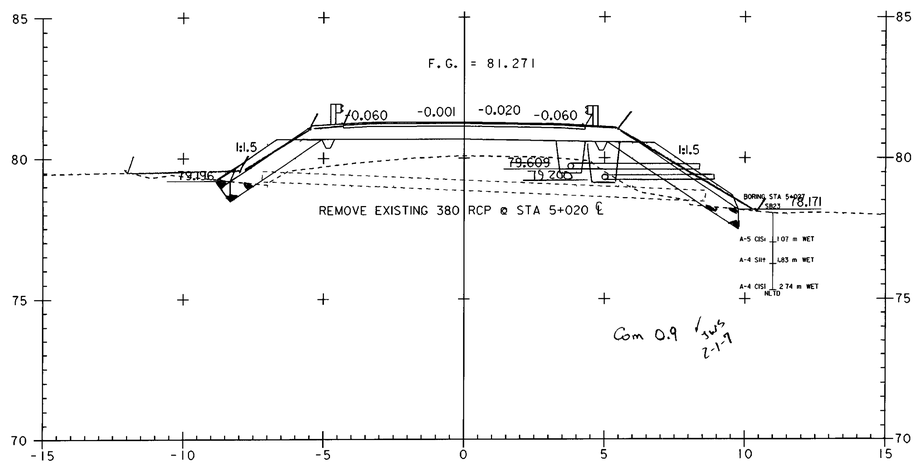

5+020

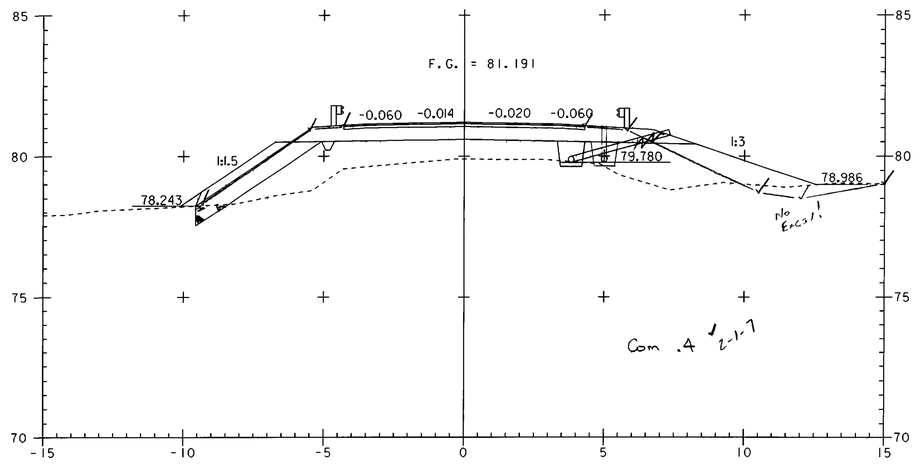

5+040

0 2 4 6 8 10
SCALE IN METERS

PROJECT NAME:	HIGHGATE - FRANKLIN
PROJECT NUMBER:	STP RS 0301(1) SA
FILE NAME: ...85c060\design\dc060x07.dgn	PLOT DATE: 09-MAY-2005
PROJECT LEADER: DELLASANTA	DRAWN BY: SQUAD B
DESIGNED BY: SQUAD B	CHECKED BY: SQUAD B
IPARM FILE NAME: dc060x075.I	SHEET 351 OF 450

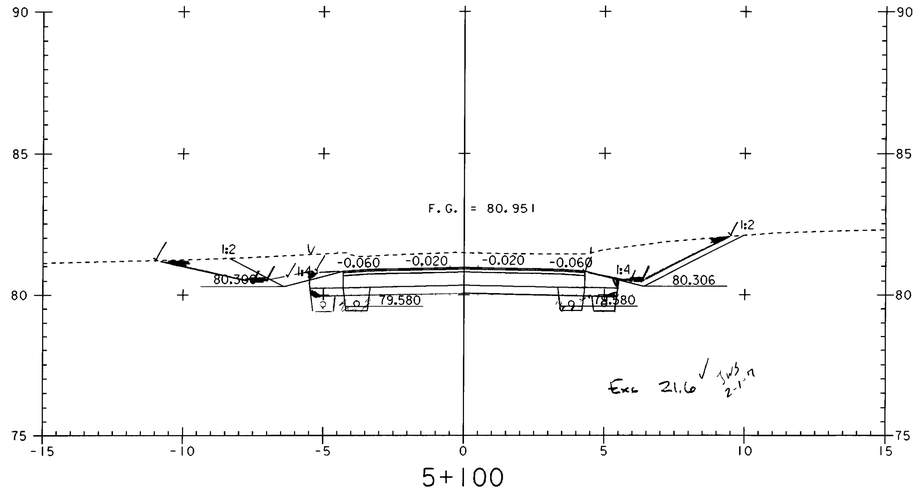

5+100

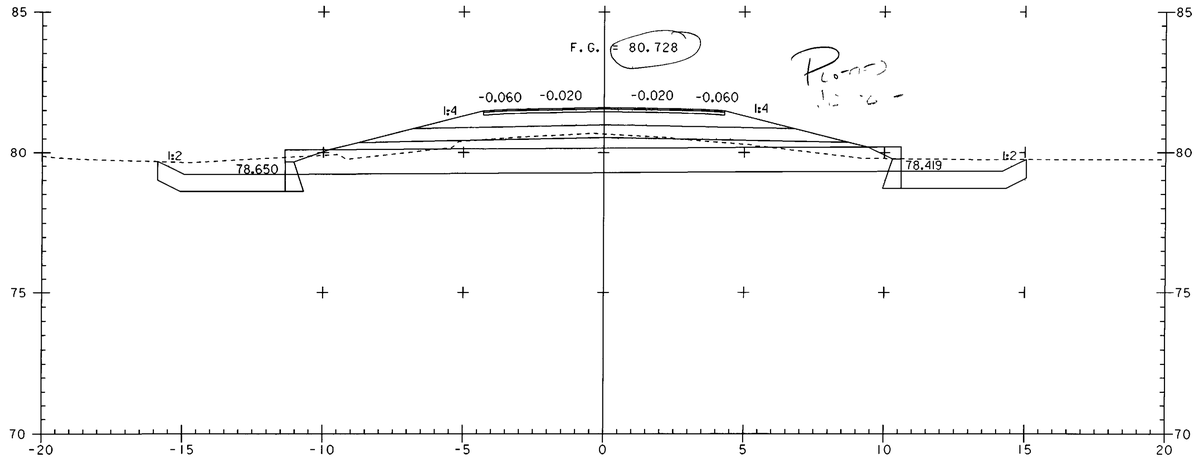

5+156

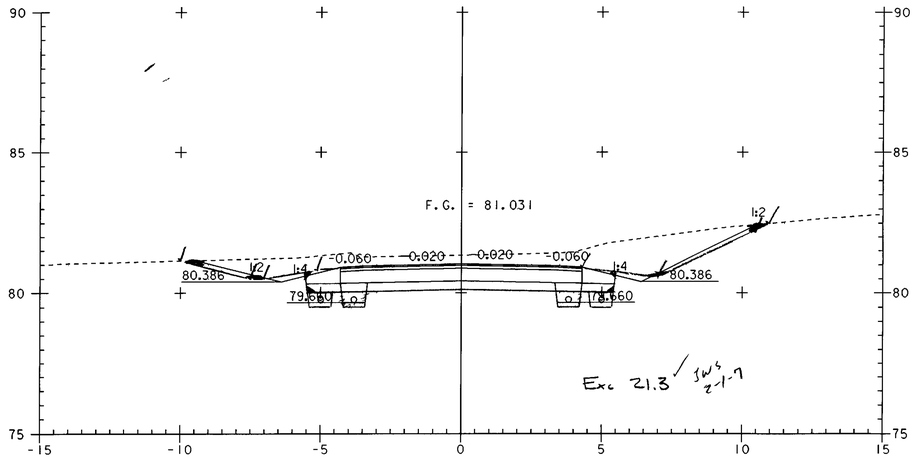

5+080

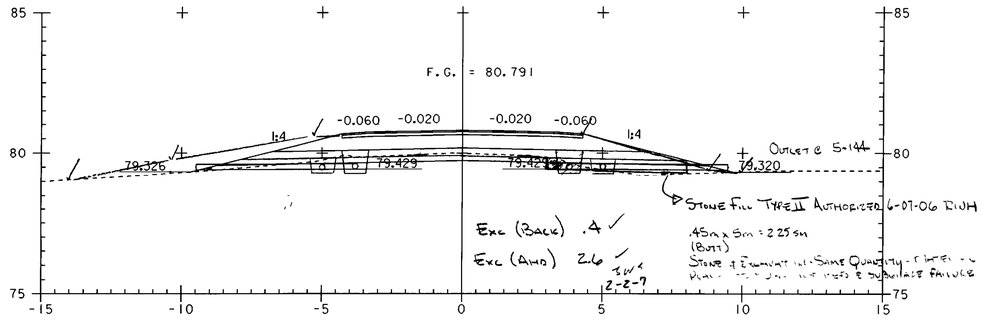

5+140

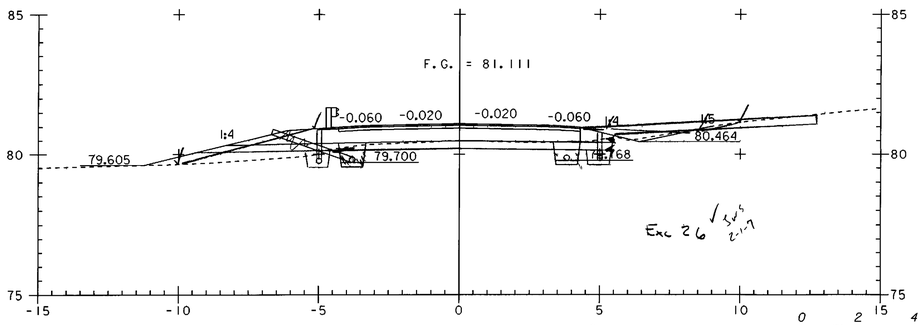

5+060 B[illegible] (300MM)

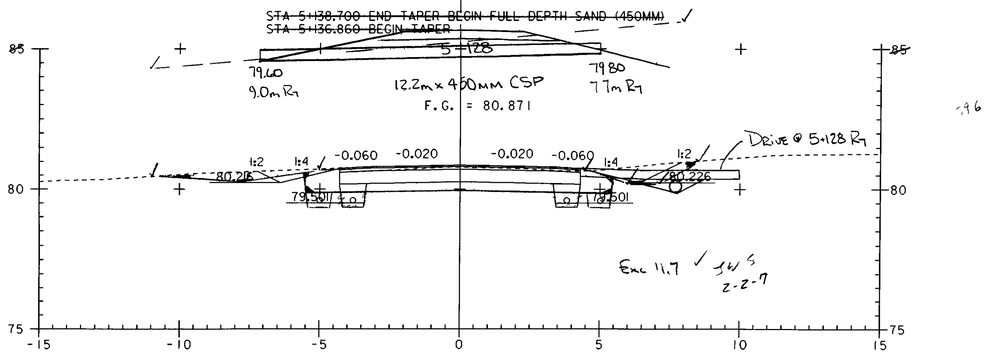

5+120

0 2 15 4 6 8 10
SCALE IN METERS

PROJECT NAME:	HIGHGATE - FRANKLIN
PROJECT NUMBER:	STP RS 0301(1) SA
FILE NAME: ...85c060\design\dc060x07.dgn	PLOT DATE: 09-MAY-2005
PROJECT LEADER: DELLASANTA	DRAWN BY: SQUAD B
DESIGNED BY: SQUAD B	CHECKED BY: SQUAD B
IPARM FILE NAME: dc060x076.i	SHEET 352 OF 450

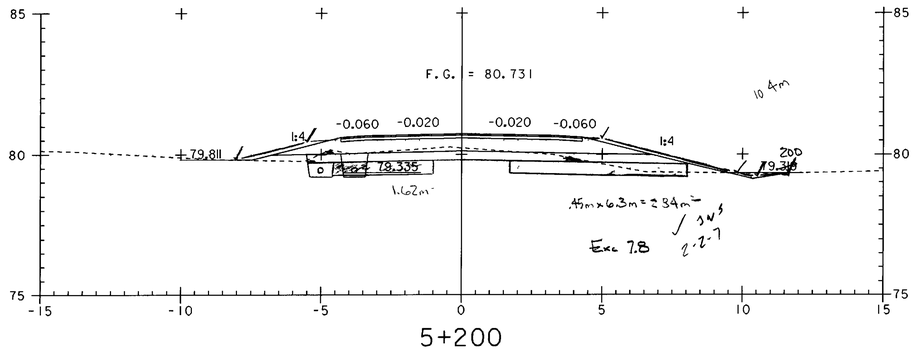

5+200

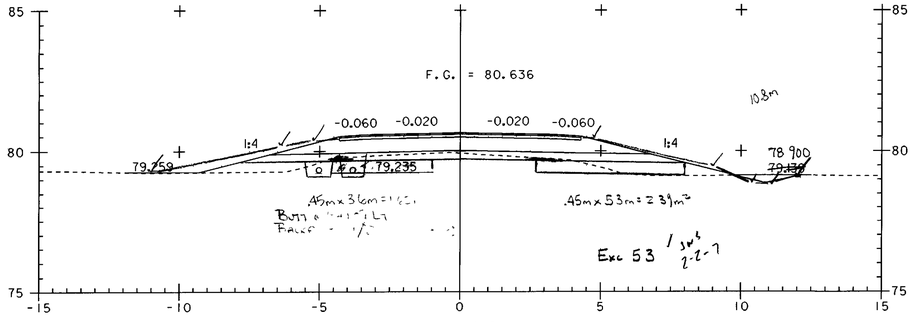

5+180

STA 5+178.480 END TAPER
STA 5+176.700 END FULL DEPTH SAND (450MM) BEGIN TAPER

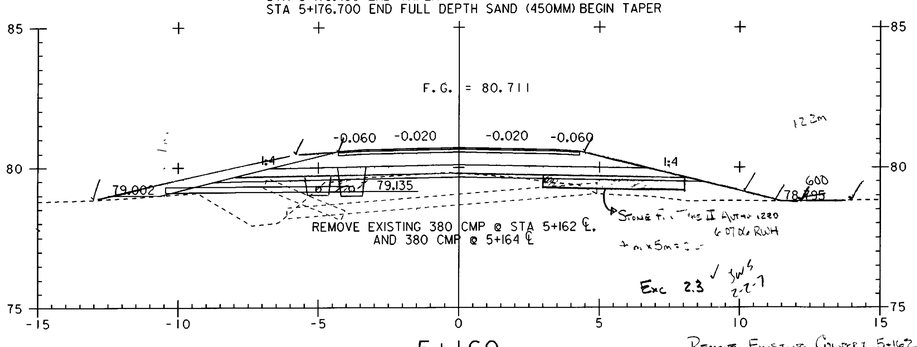

5+160

Remove Existing Culvert 5+164
$\left(\frac{0.0+1.4}{2} \times 13\right) \times 1.41 = 12.8\,m^3$ To Bk 2, Pg 158
WBF 8-02-06
RWH 12-27-06

Remove Existing Culvert 5+162
$\left(\frac{0.0+1.1}{2} \times 14\right)(1.1 \times 48) + \left(\frac{1.1+0.4}{2} \times 42\right) + \left(\frac{0.4+0.0}{2} \times 07\right) \times 1.41 = 13.2\,m^3$ To Bk 2, Pg 156
WBF 8-02-06
RWH 12-27-06

0 2 4 6 8 10
SCALE IN METERS

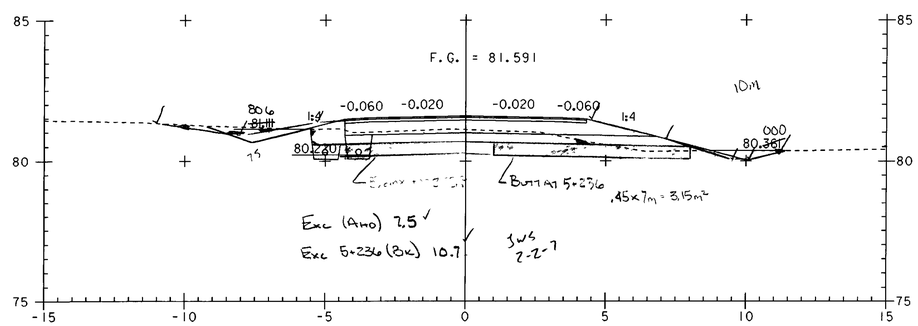

5+240

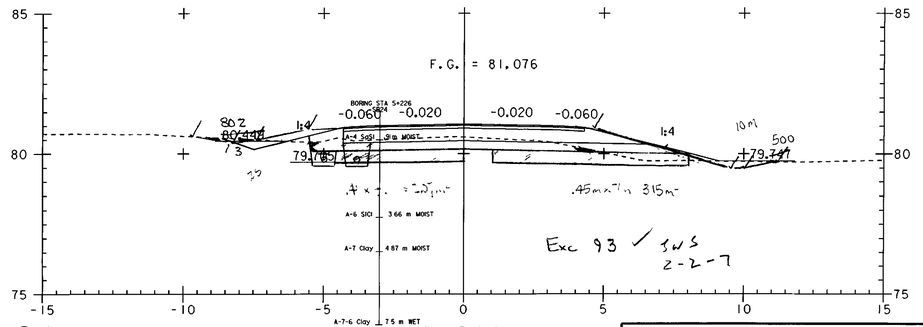

5+220

PROJECT NAME: HIGHGATE - FRANKLIN	
PROJECT NUMBER: STP RS 0301(1) SA	
FILE NAME: ...85c060\design\dc060x07.dgn	PLOT DATE: 09-MAY-2005
PROJECT LEADER: DELLASANTA	DRAWN BY: SQUAD B
DESIGNED BY: SQUAD B	CHECKED BY: SQUAD B
IPARM FILE NAME: dc060x077.i	SHEET 353 OF 450

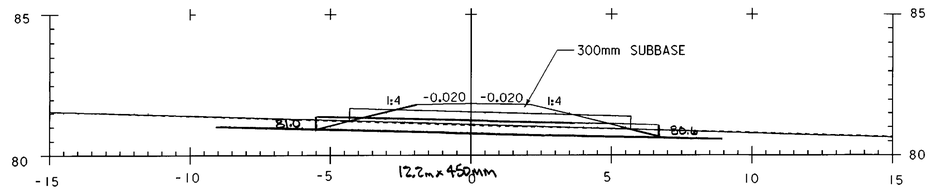

DRIVE @ 5+264 RT
A - A

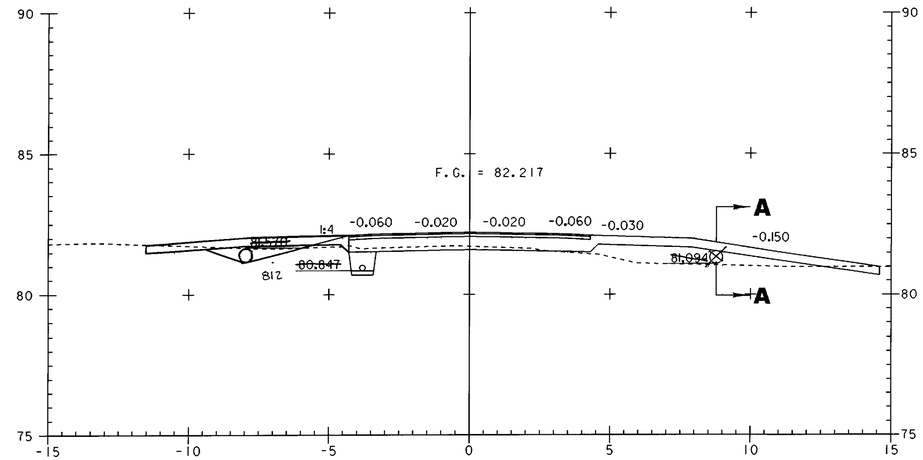

5+264

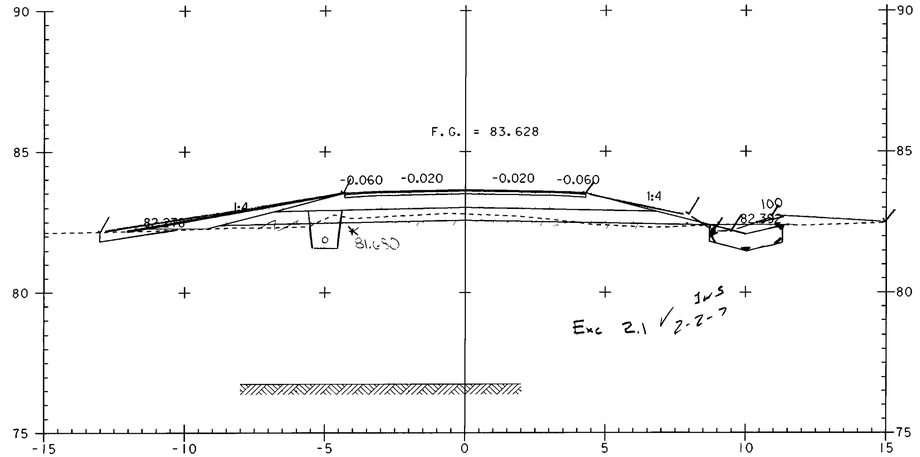

5+300 End Taper

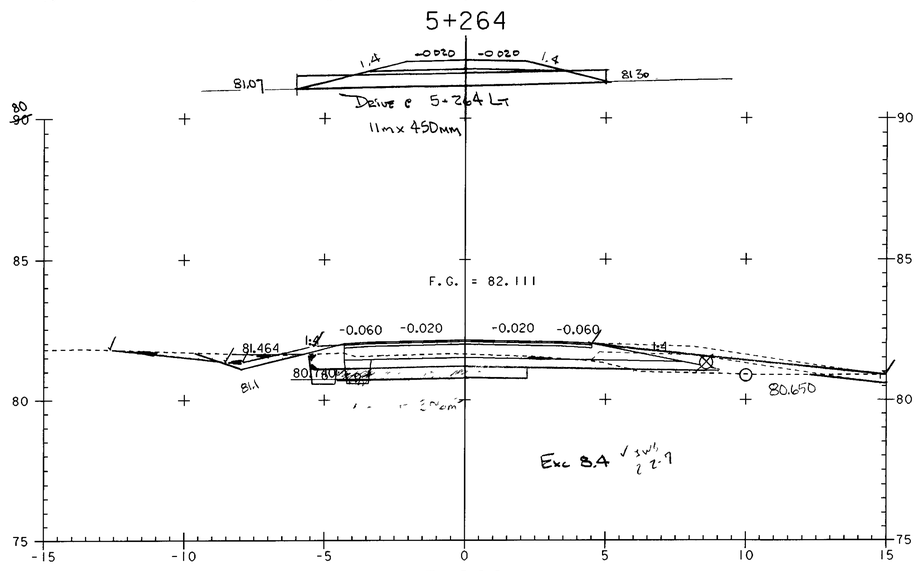

5+260

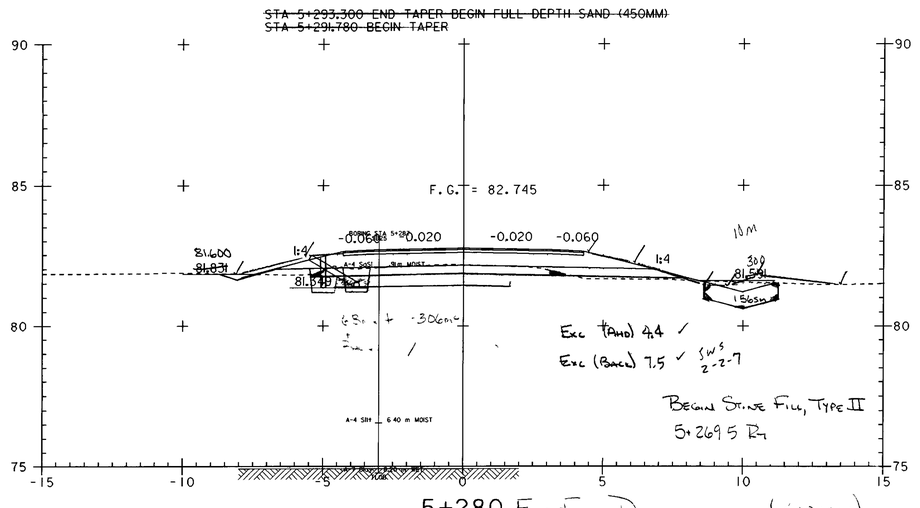

5+280 End F... De... (...)
B... T...

0 2 4 6 8 10
SCALE IN METERS

PROJECT NAME: HIGHGATE - FRANKLIN	
PROJECT NUMBER: STP RS 0301(1) SA	
FILE NAME: ...85c060\design\dc060x07.dgn	PLOT DATE: 09-MAY-2005
PROJECT LEADER: DELLASANTA	DRAWN BY: SQUAD B
DESIGNED BY: SQUAD B	CHECKED BY: SQUAD B
IPARM FILE NAME: dc060x078.i	SHEET 354 OF 450

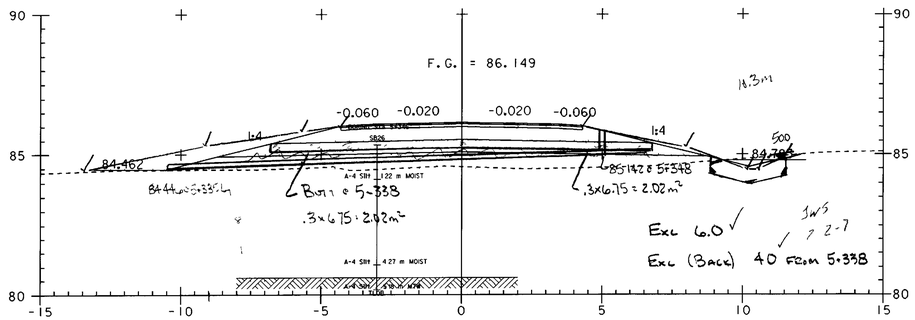

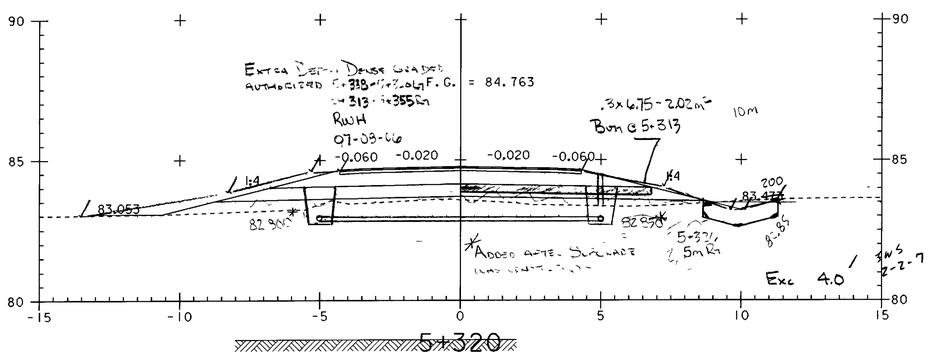

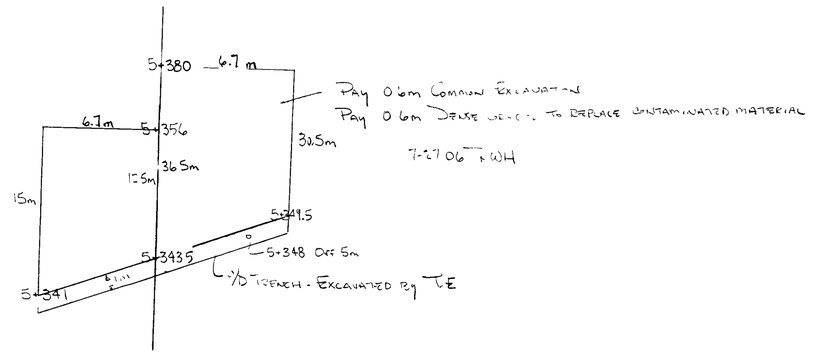

Additional Undercut Area - First Installed
Undercut Failed - Installed & Replaced Same Time

0 2 4 6 8 10
SCALE IN METERS

PROJECT NAME:	HIGHGATE - FRANKLIN
PROJECT NUMBER:	STP RS 0301(1) SA
FILE NAME: ...85c060\design\dc060x07.dgn	PLOT DATE: 09-MAY-2005
PROJECT LEADER: DELLASANTA	DRAWN BY: SQUAD B
DESIGNED BY: SQUAD B	CHECKED BY: SQUAD B
IPARM FILE NAME: dc060x079.i	SHEET 355 OF 450

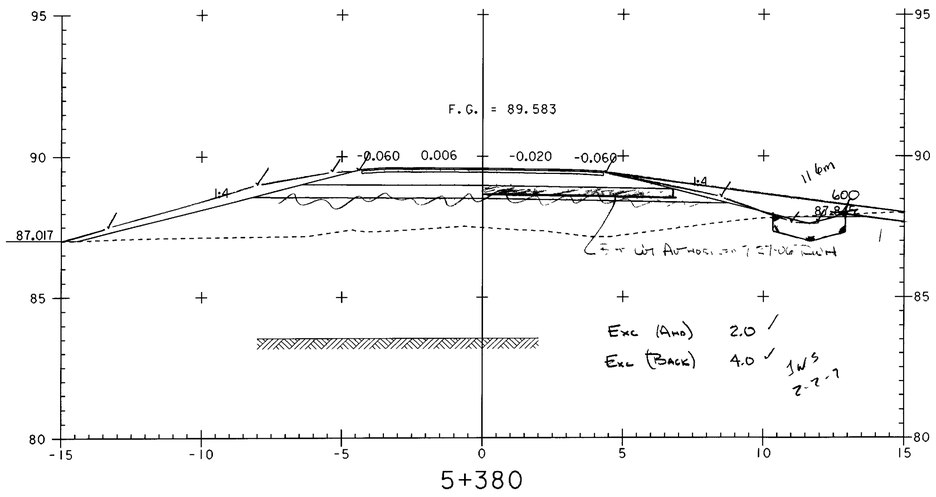

5+380

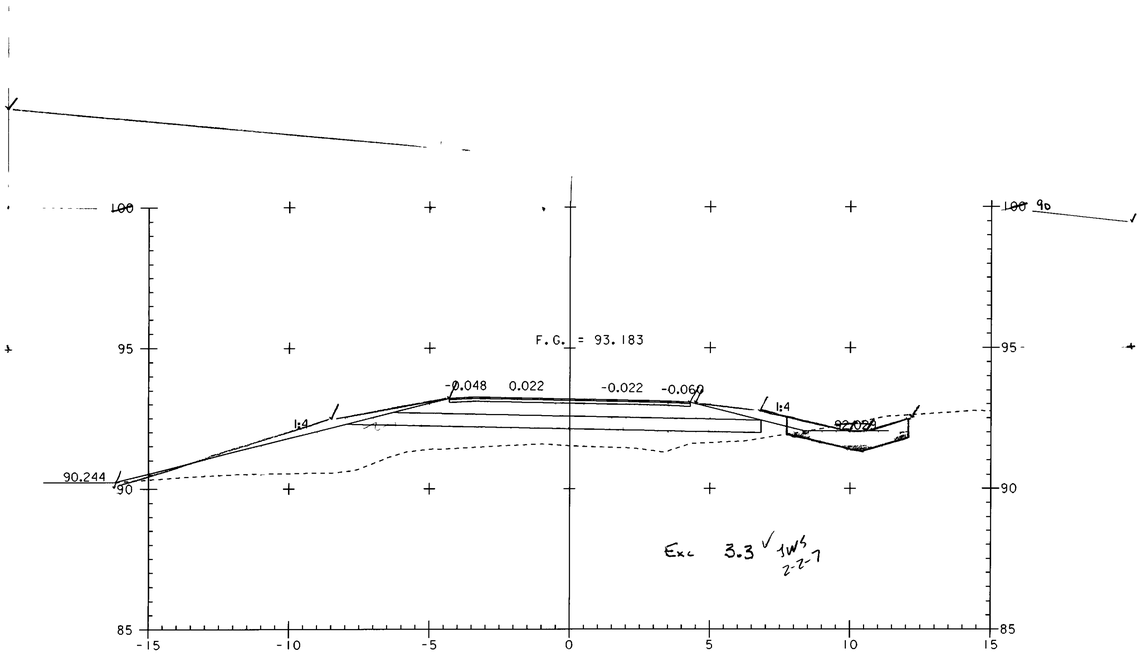

5+420

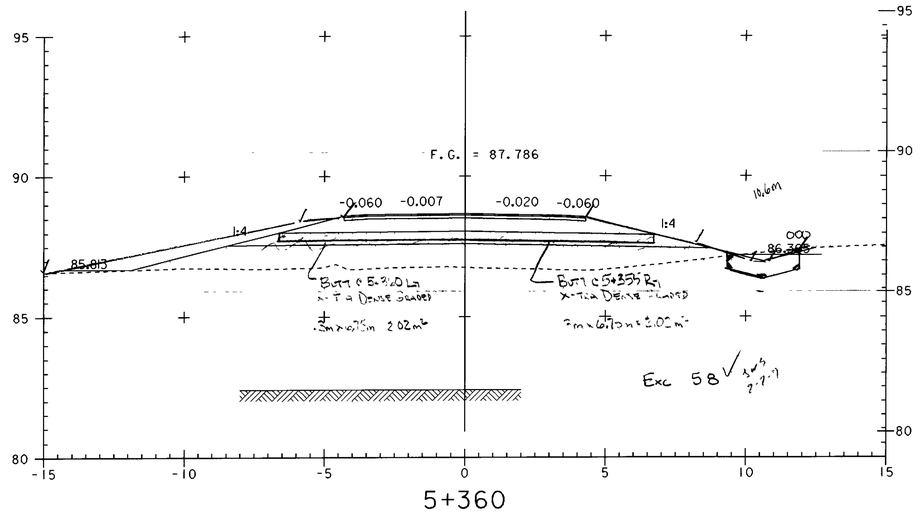

5+360

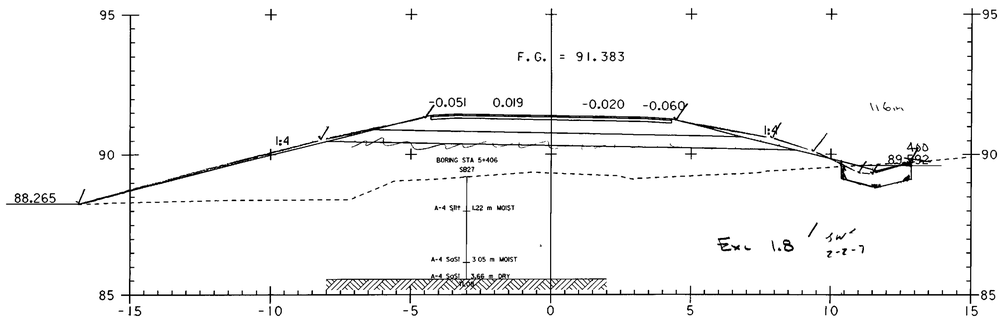

5+400

0 2 4 6 8 10
SCALE IN METERS

PROJECT NAME:	HIGHGATE - FRANKLIN
PROJECT NUMBER:	STP RS 0301(1) SA
FILE NAME: ...85c060\design\dc060x07.dgn	PLOT DATE: 09-MAY-2005
PROJECT LEADER: DELLASANTA	DRAWN BY: SQUAD B
DESIGNED BY: SQUAD B	CHECKED BY: SQUAD B
IPARM FILE NAME: dc060x0710.i	SHEET 356 OF 450

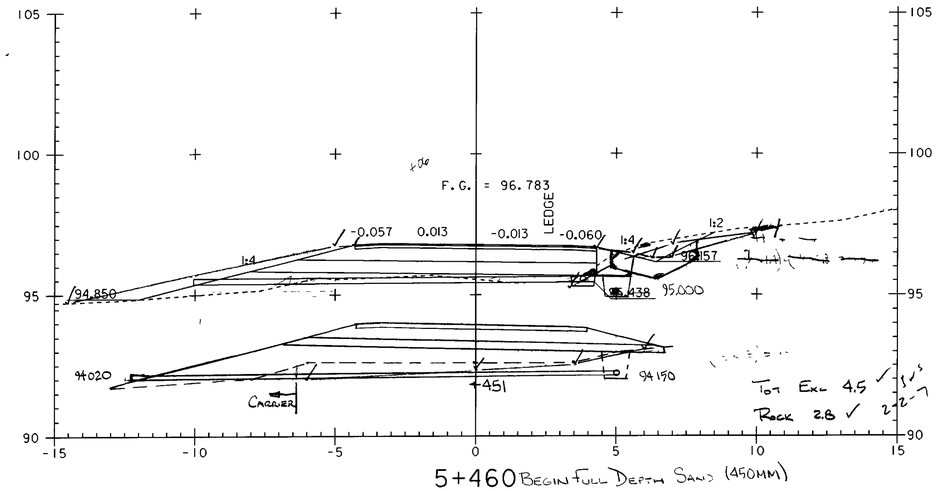

5+460 BEGIN FULL DEPTH SAND (450MM)

Tot Exc 4.5 ✓ jws 2-7-7
Rock 2.8 ✓

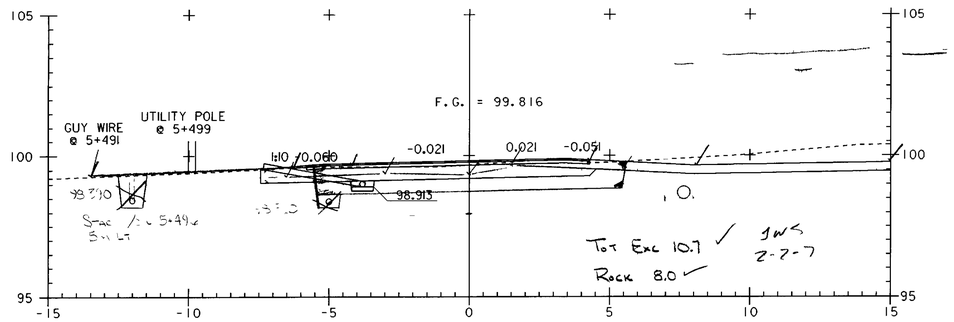

5+500

Tot Exc 10.7 ✓ jws 2-7-7
Rock 8.0 ✓

Zero Rock 5+459

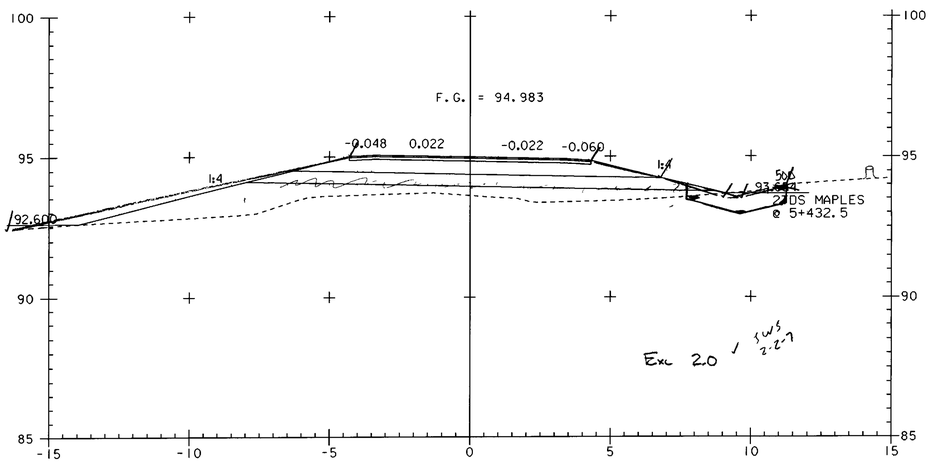

5+440 BEGIN SAND TAPER

Exc 2.0 ✓ jws 2-7-7

~~STA 5+486.840 END TAPER~~
~~STA 5+484.320 END FULL DEPTH SAND (450MM) BEGIN TAPER~~

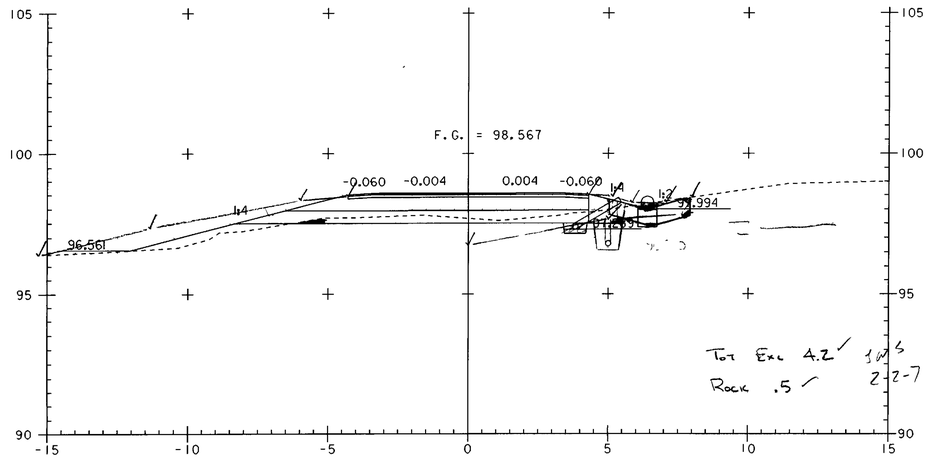

5+480

Tot Exc 4.2 ✓ jws 2-7-7
Rock .5 ✓

0 2 4 6 8 10
SCALE IN METERS

PROJECT NAME:	HIGHGATE - FRANKLIN
PROJECT NUMBER:	STP RS 0301(1) SA
FILE NAME: ...85c060\design\dc060x07.dgn	PLOT DATE: 09-MAY-2005
PROJECT LEADER: DELLASANTA	DRAWN BY: SQUAD B
DESIGNED BY: SQUAD B	CHECKED BY: SQUAD B
IPARM FILE NAME: dc060x07ll.i	SHEET 357 OF 450

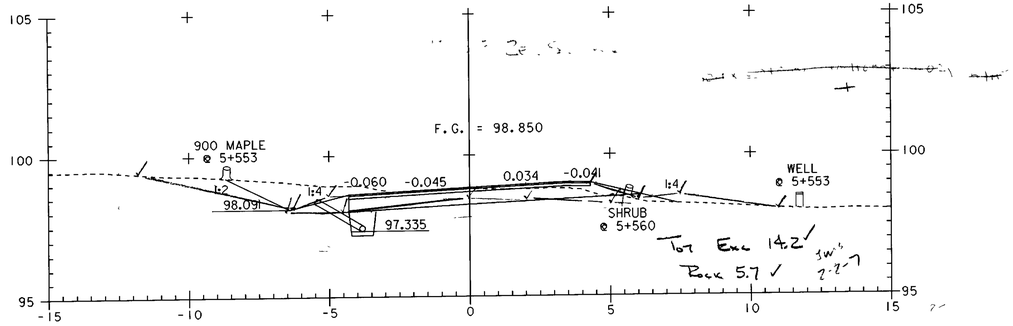

5+560

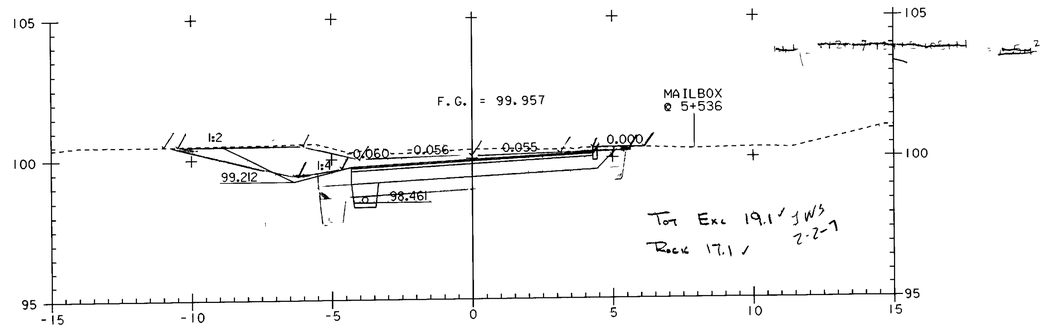

5+540

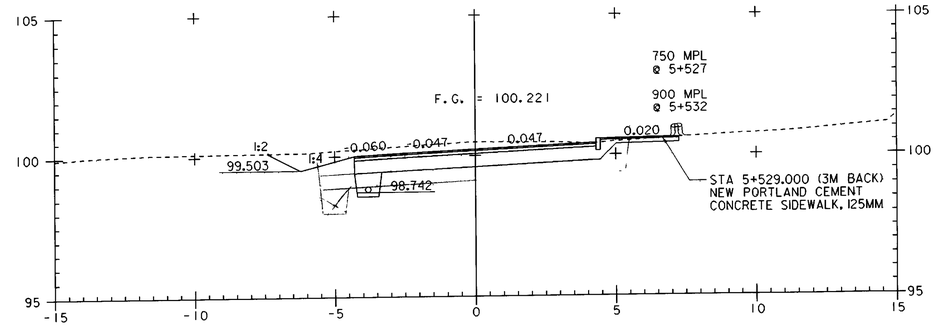

5+530

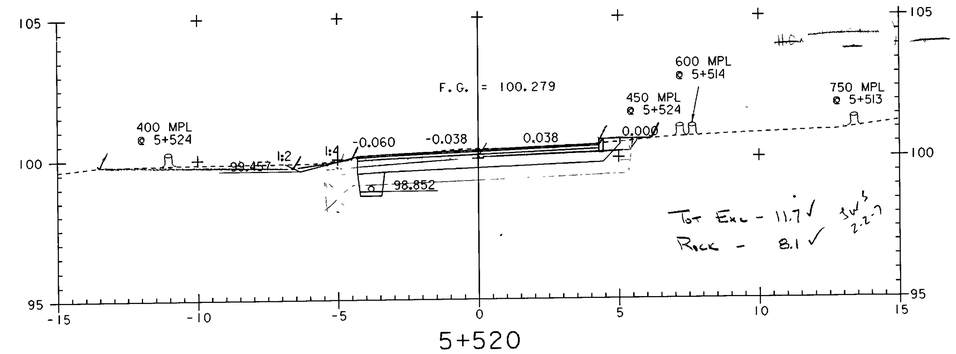

5+520

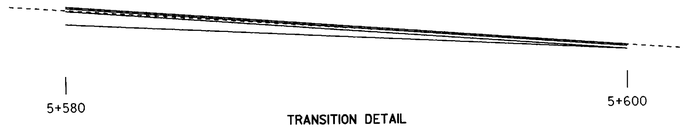

TRANSITION DETAIL

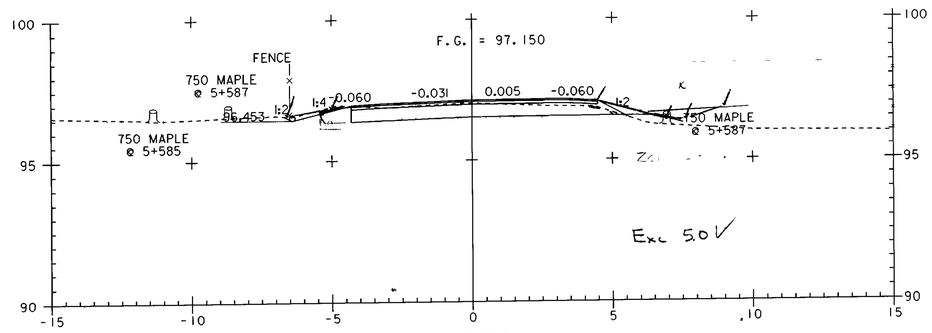

5+580

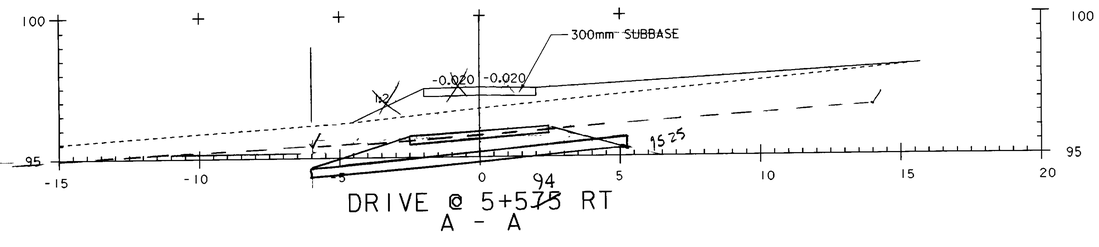

DRIVE @ 5+575 RT
A - A

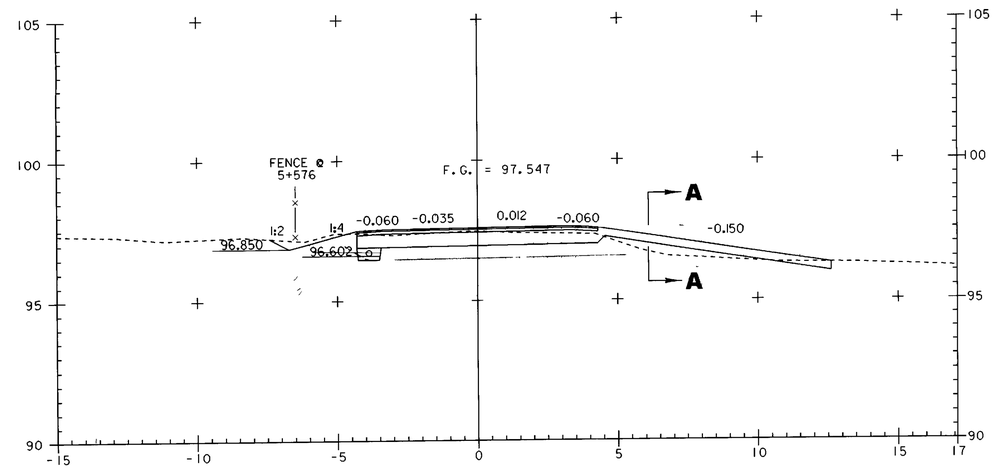

5+575

0 2 4 6 8 10
SCALE IN METERS

PROJECT NAME:	HIGHGATE - FRANKLIN
PROJECT NUMBER:	STP RS 0301(I) SA
FILE NAME: ...85c060\design\dc060x07.dgn	PLOT DATE: 09-MAY-2005
PROJECT LEADER: DELLASANTA	DRAWN BY: SQUAD B
DESIGNED BY: SQUAD B	CHECKED BY: SQUAD B
IPARM FILE NAME: dc060x0712.1	SHEET 358 OF 450

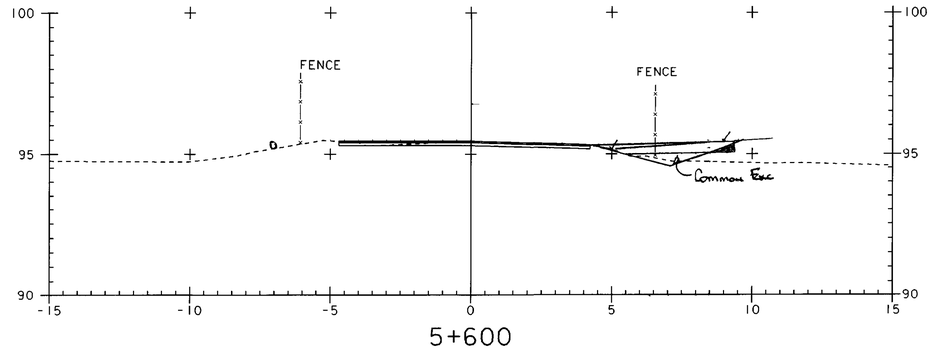

5+600

STA 5+600.000
BEGIN FINE GRADING AND PAVING
MATCH EXISTING GRADE

PROFILE TH #15

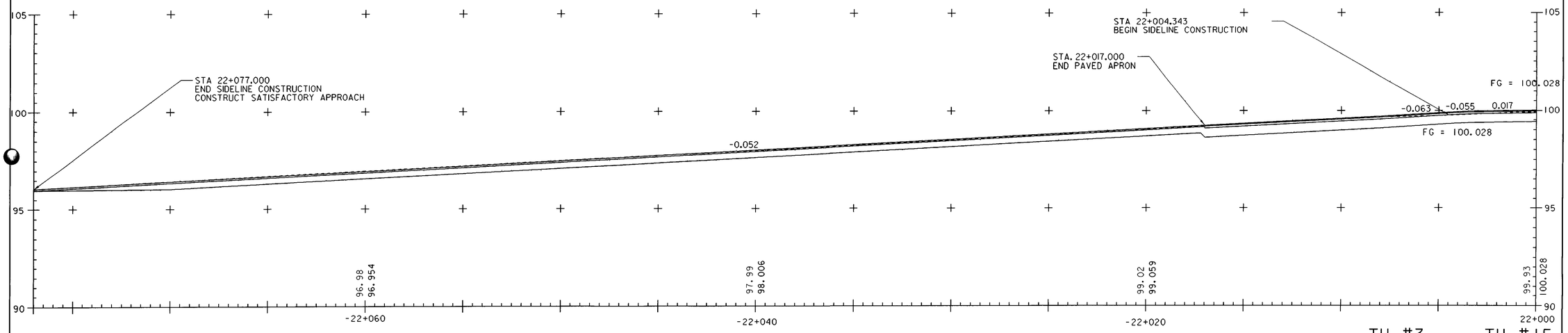

TH #3 TH #15
5+505.740 = 22+000

PROFILE TH #24

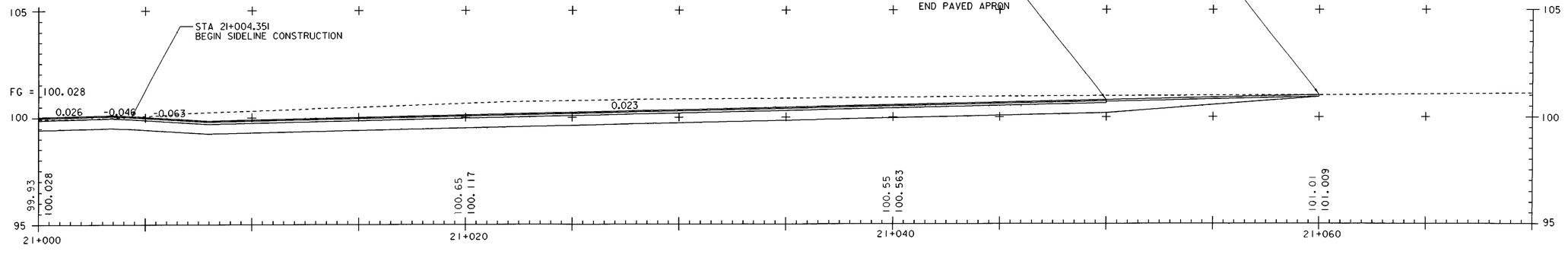

TH #1 TH #24
5+505.740 = 21+000

0 2 4 6 8 10
SCALE IN METERS

PROJECT NAME:	HIGHGATE - FRANKLIN
PROJECT NUMBER:	STP RS 0301(I) SA
FILE NAME: ...85c060\design\dc060x07.dgn	PLOT DATE: 09-MAY-2005
PROJECT LEADER: DELLASANTA	DRAWN BY: SQUAD B
DESIGNED BY: SQUAD B	CHECKED BY: SQUAD B
IPARM FILE NAME: dc060x0713.i	SHEET 359 OF 450

TH #24 SECTIONS

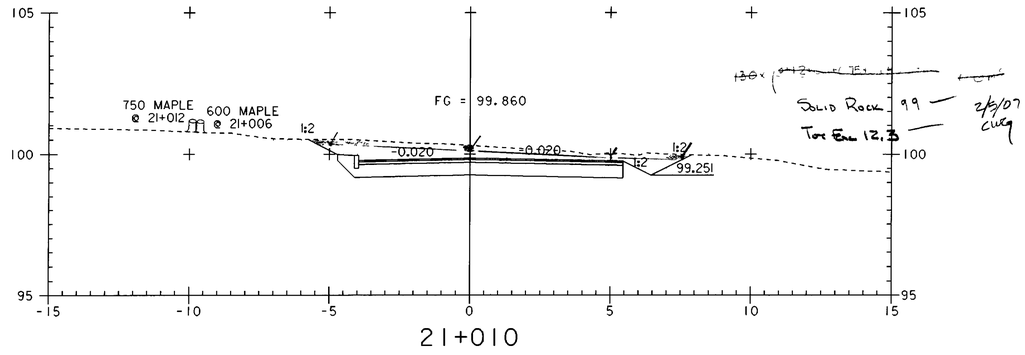

21+010

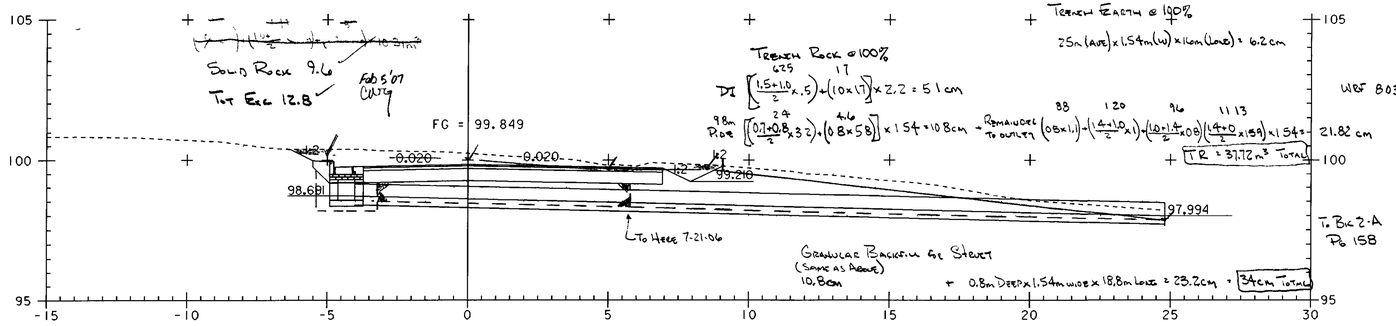

21+007.951

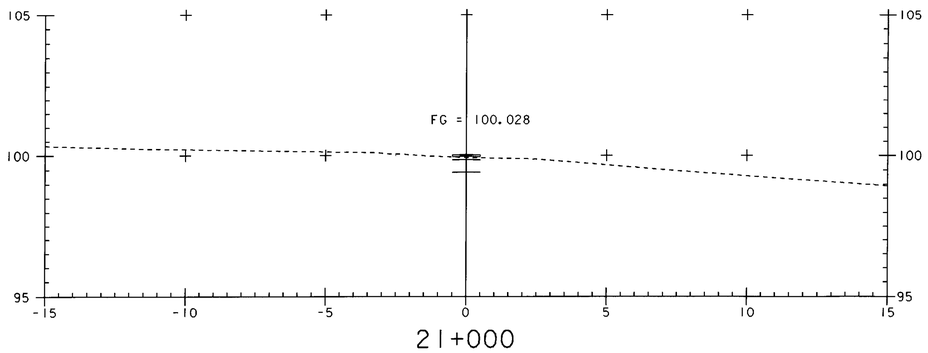

21+000

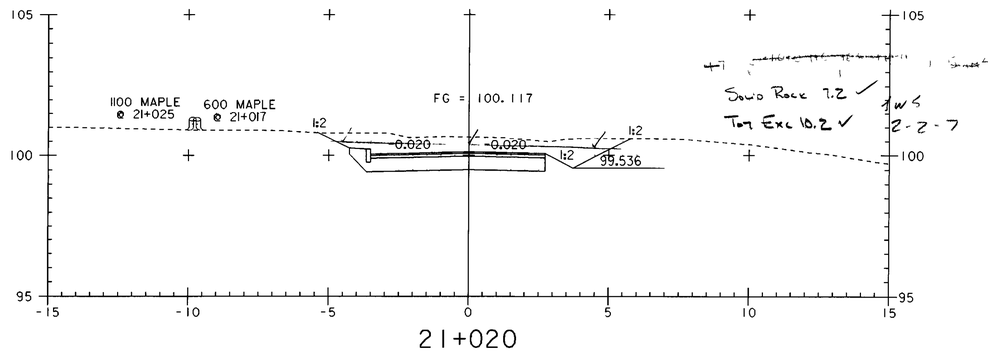

21+020

0 2 4 6 8 10
SCALE IN METERS

PROJECT NAME:	HIGHGATE - FRANKLIN
PROJECT NUMBER:	STP RS 0301(1) SA
FILE NAME: ...85c060\design\dc060x07.dgn	PLOT DATE: 09-MAY-2005
PROJECT LEADER: DELLASANTA	DRAWN BY: SQUAD B
DESIGNED BY: SQUAD B	CHECKED BY: SQUAD B
IPARM FILE NAME: dc060x0714.i	SHEET 360 OF 450

TH #24 SECTIONS

VDOT Metric

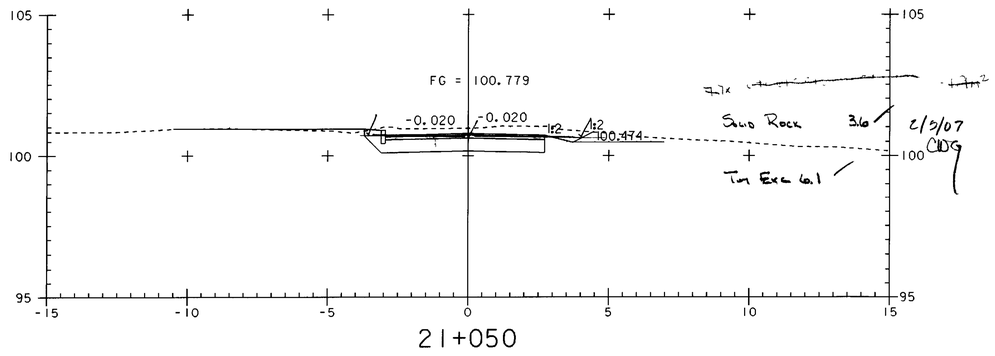

21+050

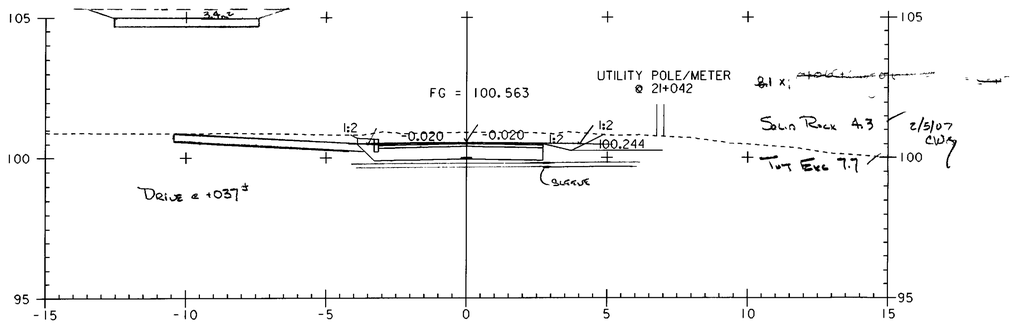

21+040

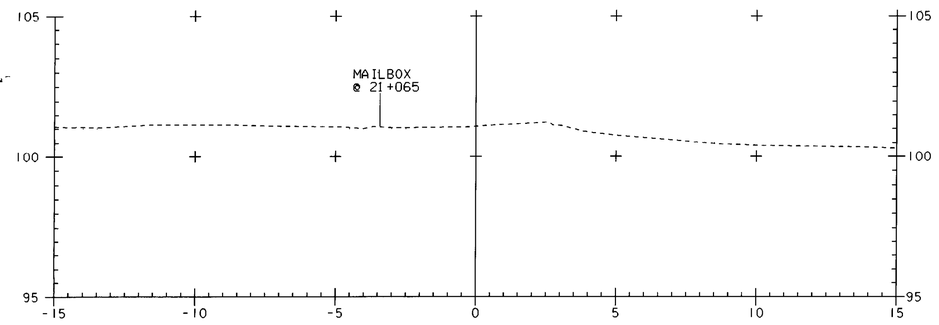

21+070

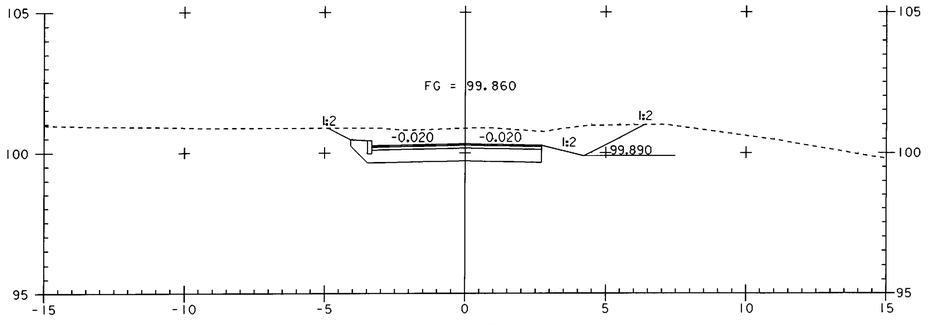

21+030

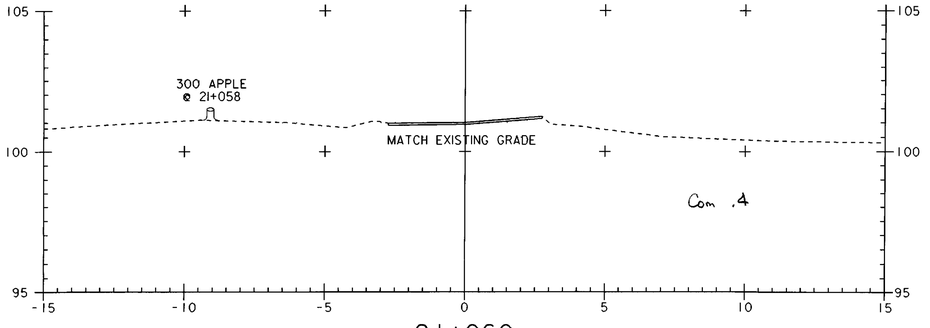

21+060
END CONSTRUCTION TH #24

0 2 4 6 8 10
SCALE IN METERS

TRANSITION DETAIL

PROJECT NAME:	HIGHGATE - FRANKLIN
PROJECT NUMBER:	STP RS 0301(1) SA
FILE NAME: ...85c060\design\dc060x07.dgn	PLOT DATE: 09-MAY-2005
PROJECT LEADER: DELLASANTA	DRAWN BY: SQUAD B
DESIGNED BY: SQUAD B	CHECKED BY: SQUAD B
IPARM FILE NAME: dc060x0715.1	SHEET 361 OF 450

TH #15 SECTIONS

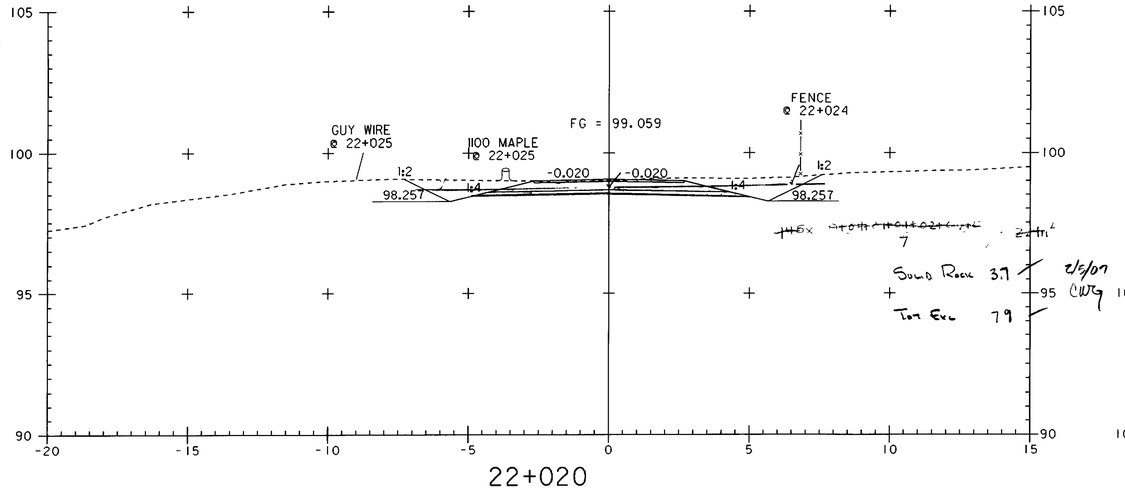

22+020

Solid Rock 3.7 2/5/07 CWG

Top Exc 7.9

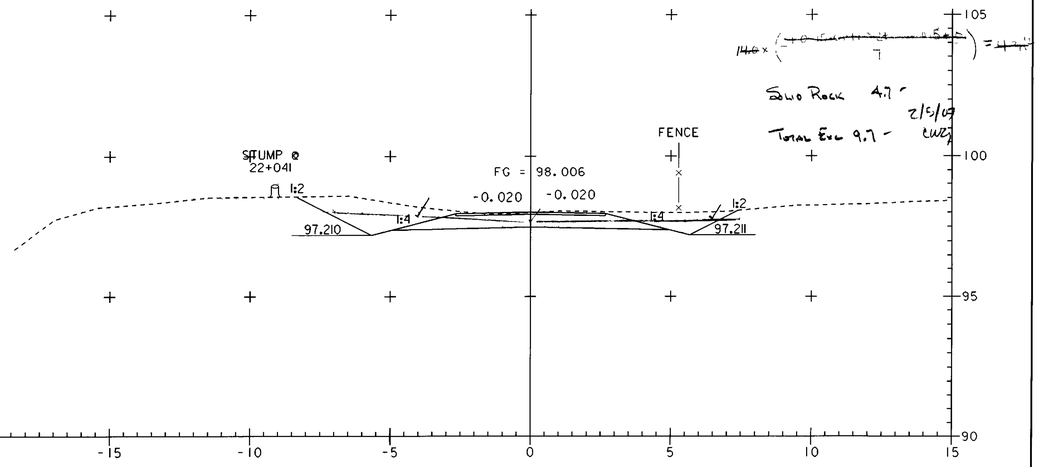

22+040

Solid Rock 4.7 2/5/07 CWG

Total Exc 9.7

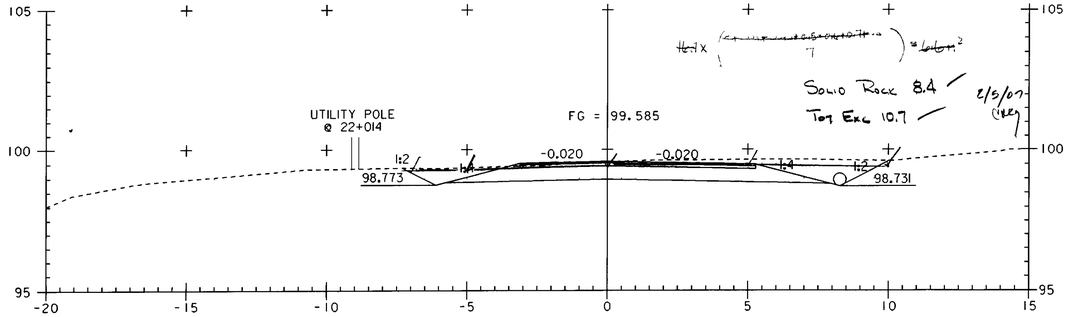

22+010

Solid Rock 8.4 2/5/07 CWG

Top Exc 10.7

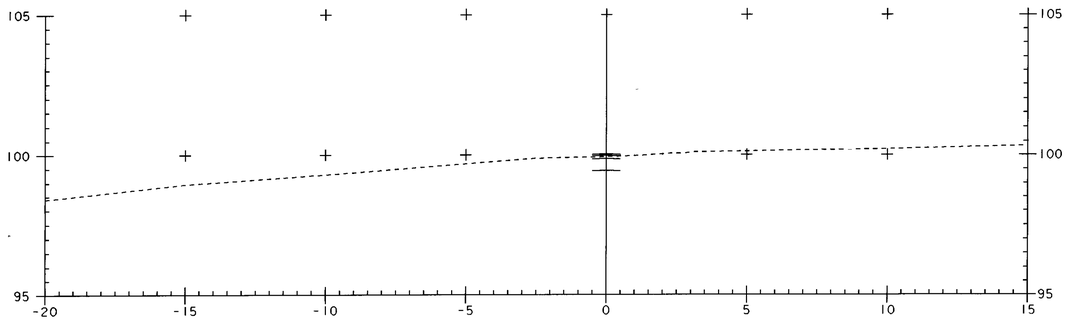

22+000

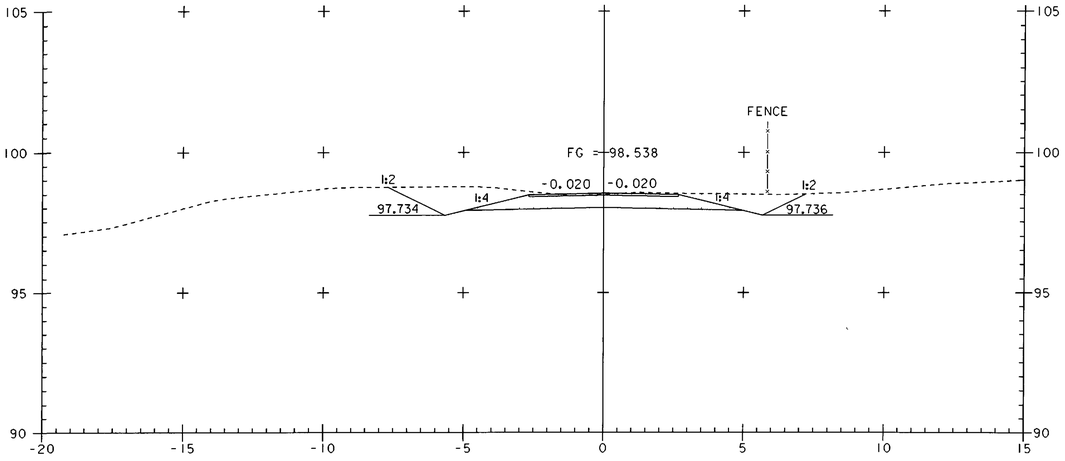

22+030

0 2 4 6 8 10
SCALE IN METERS

PROJECT NAME:	HIGHGATE - FRANKLIN
PROJECT NUMBER:	STP RS 0301(1) SA
FILE NAME: ...85c060\design\dc060x07.dgn	PLOT DATE: 09-MAY-2005
PROJECT LEADER: DELLASANTA	DRAWN BY: SQUAD B
DESIGNED BY: SQUAD B	CHECKED BY: SQUAD B
IPARM FILE NAME: dc060x0716.i	SHEET 362 OF 450

TH #15 SECTIONS

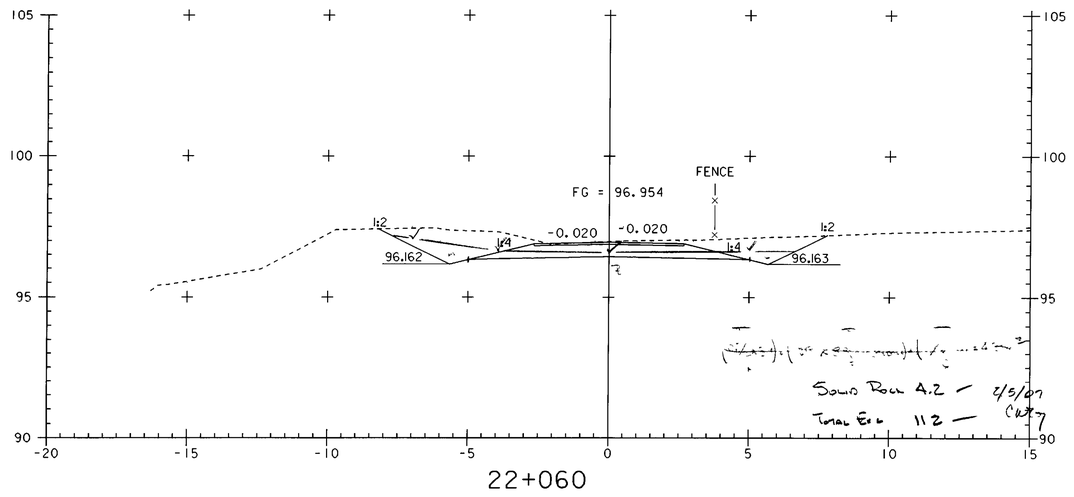

22+060

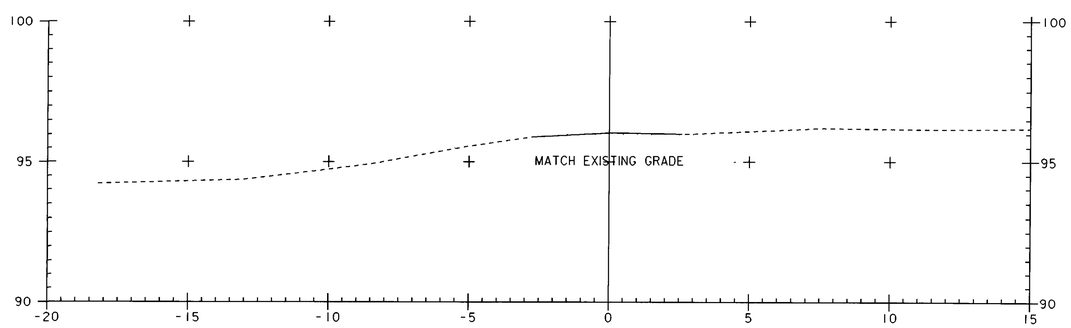

22+077

22+077
END CONSTRUCTION TH #15

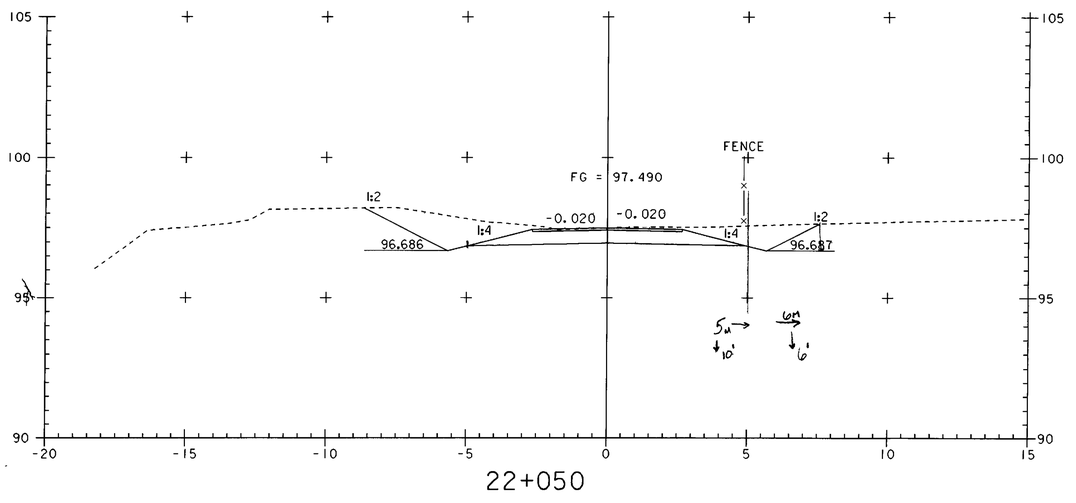

22+050

TRANSITION DETAIL

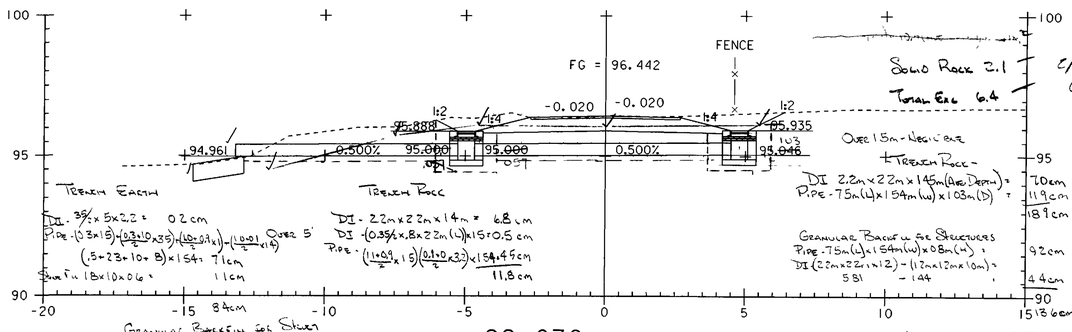

22+070

0 2 4 6 8 10
SCALE IN METERS

PROJECT NAME:	HIGHGATE - FRANKLIN
PROJECT NUMBER:	STP RS 0301(1) SA
FILE NAME: ...85c060\design\dc060x07.dgn	PLOT DATE: 09-MAY-2005
PROJECT LEADER: DELLASANTA	DRAWN BY: SQUAD B
DESIGNED BY: SQUAD B	CHECKED BY: SQUAD B
IPARM FILE NAME: dc060x0717.i	SHEET 363 OF 450

Metric

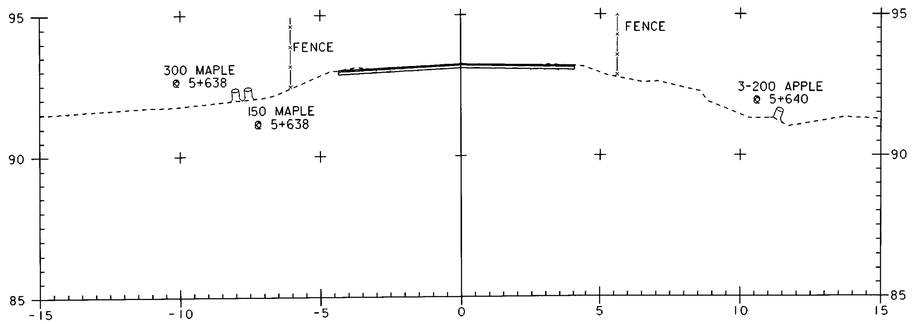

5+640

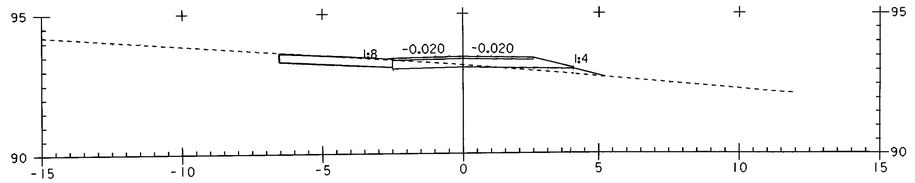

DRIVE AT 5+628 LT
SECTION A - A

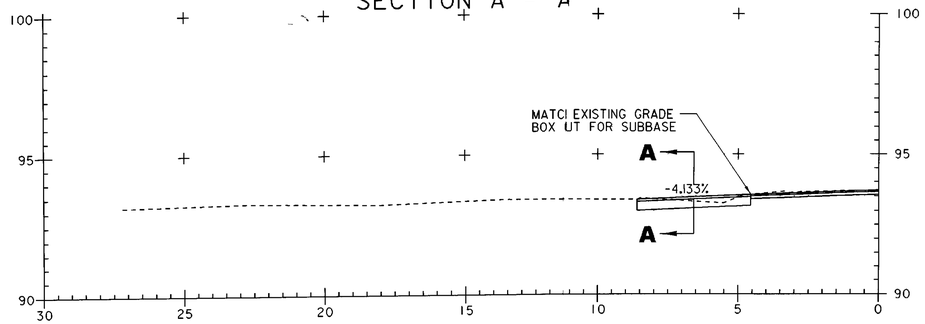

5+628

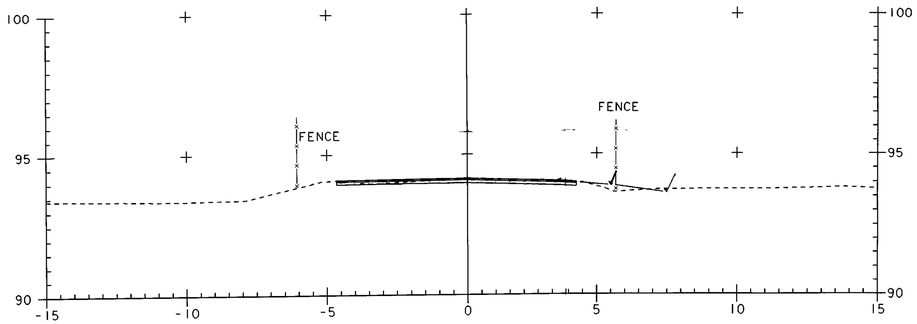

5+620

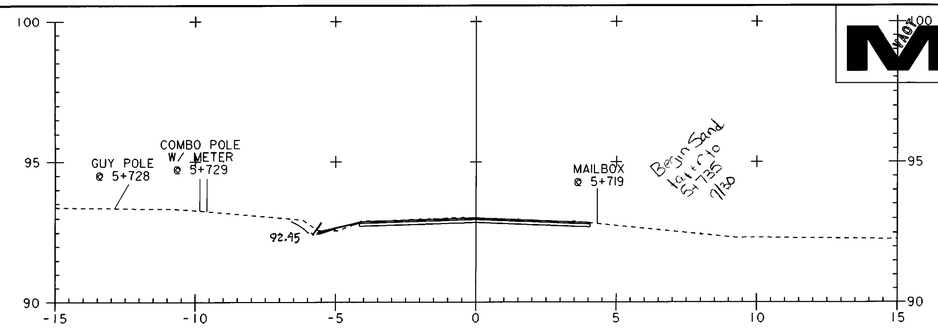

5+720

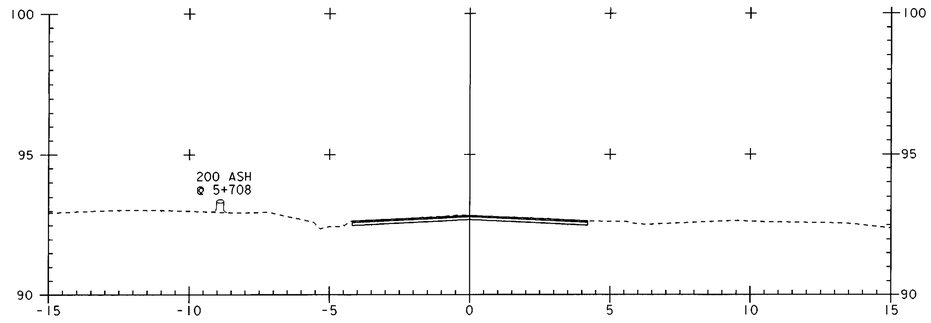

5+700

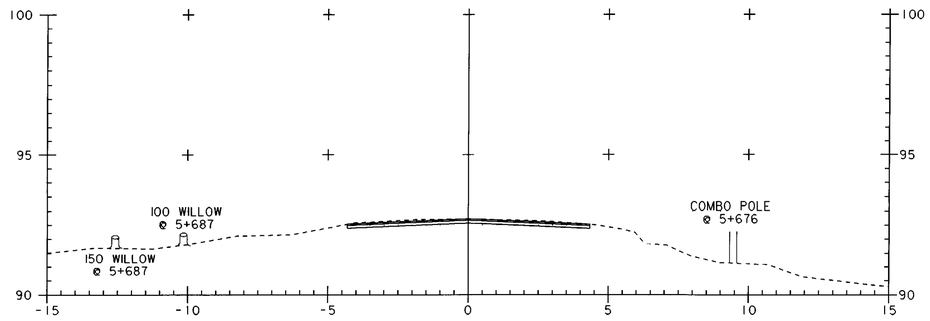

5+680

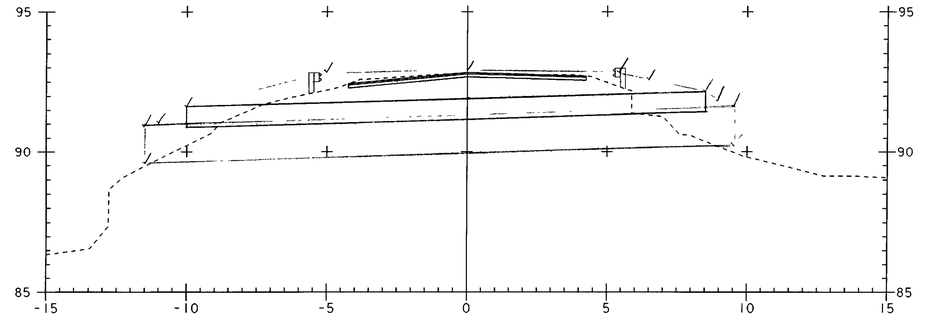

5+660

0 2 4 6 8 10
SCALE IN METERS

PROJECT NAME:	HIGHGATE - FRANKLIN
PROJECT NUMBER:	STP RS 0301(1) SA
FILE NAME: ...85c060\design\dc060x07.dgn	PLOT DATE: 09-MAY-2005
PROJECT LEADER: DELLASANTA	DRAWN BY: SQUAD B
DESIGNED BY: SQUAD B	CHECKED BY: SQUAD B
IPARM FILE NAME: dc060x0718.i	SHEET 364 OF 450

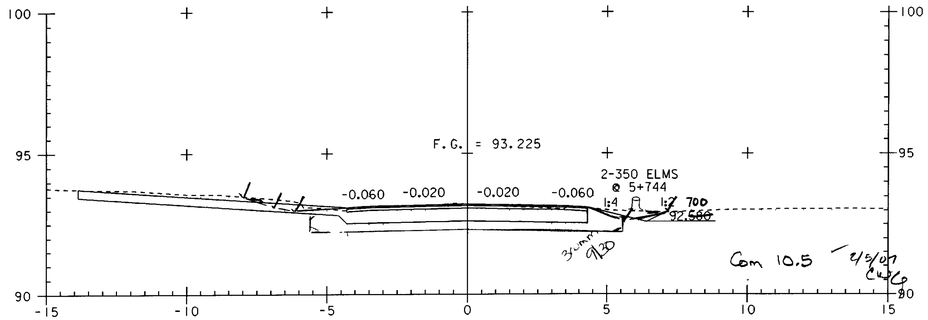

5+740

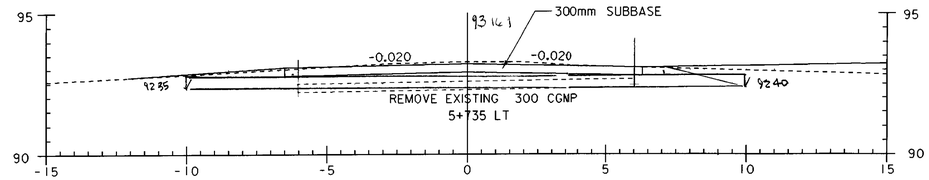

DRIVE AT 5+735 LT
A - A

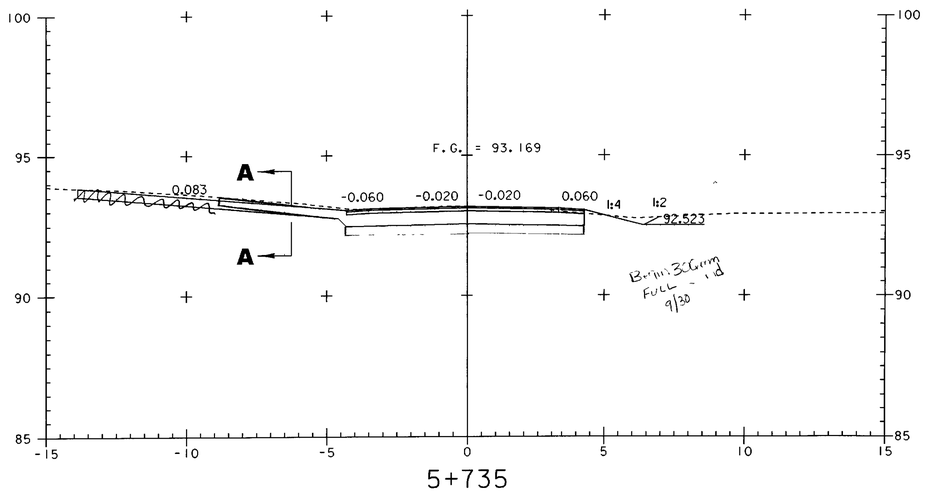

5+735

STA 5+720.000
END FINE GRADING AND PAVING
MATCH EXISTING GRADE

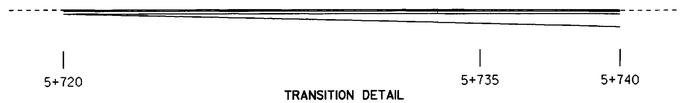

TRANSITION DETAIL

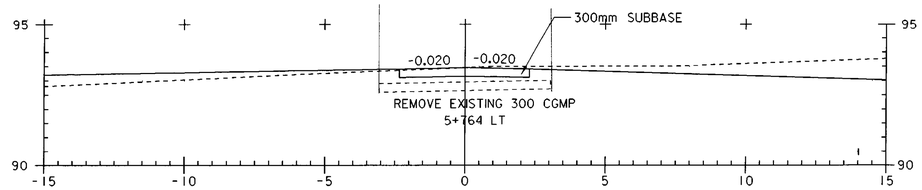

DRIVE AT 5+764 LT
A - A

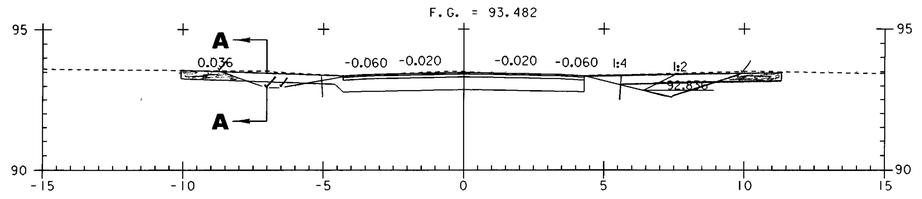

5+764

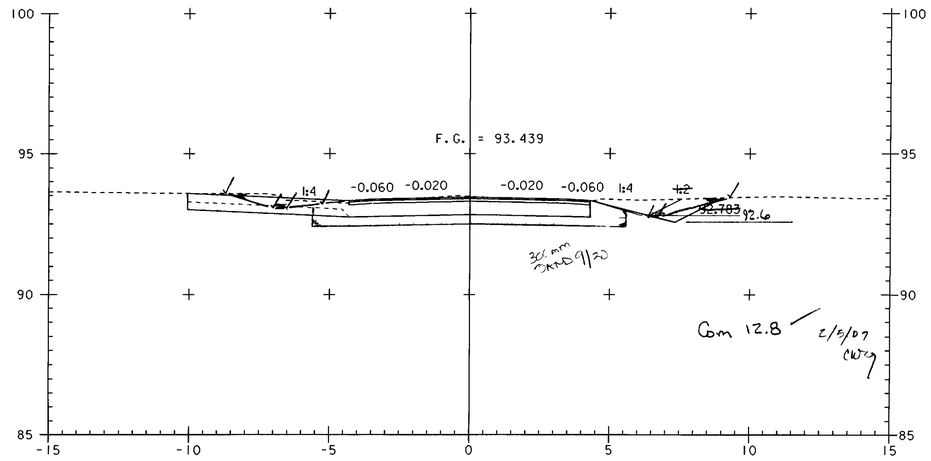

5+760

0 2 4 6 8 10
SCALE IN METERS

PROJECT NAME:	HIGHGATE - FRANKLIN
PROJECT NUMBER:	STP RS 0301(1) SA
FILE NAME: ...85c060\design\dc060x07.dgn	PLOT DATE: 09-MAY-2005
PROJECT LEADER: DELLASANTA	DRAWN BY: SQUAD B
DESIGNED BY: SQUAD B	CHECKED BY: SQUAD B
IPARM FILE NAME: dc060x0719.1	SHEET 365 OF 450

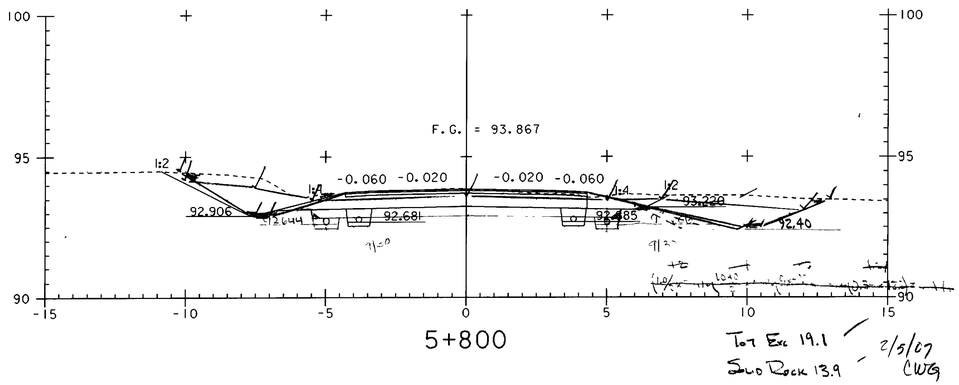

5+800

Tot Exc 19.1
Solid Rock 13.9
2/5/07 CWG

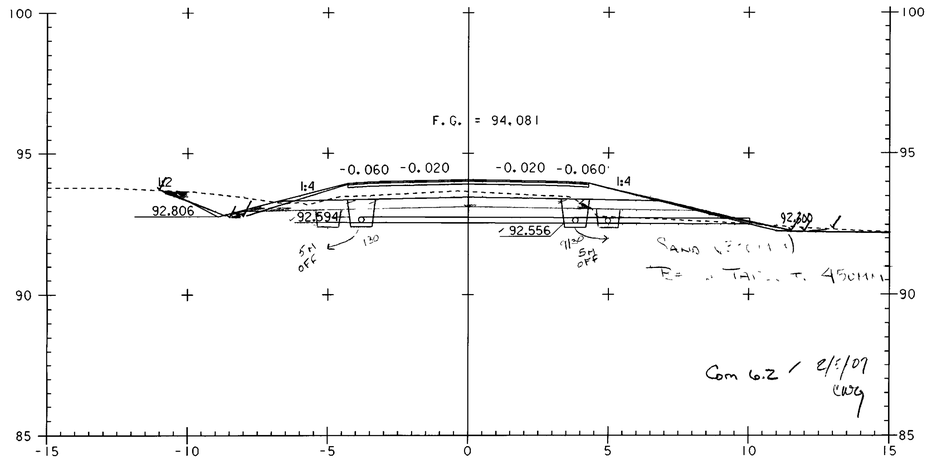

5+820

Com 6.2 2/5/07 CWG

5+780 - Solid Rock

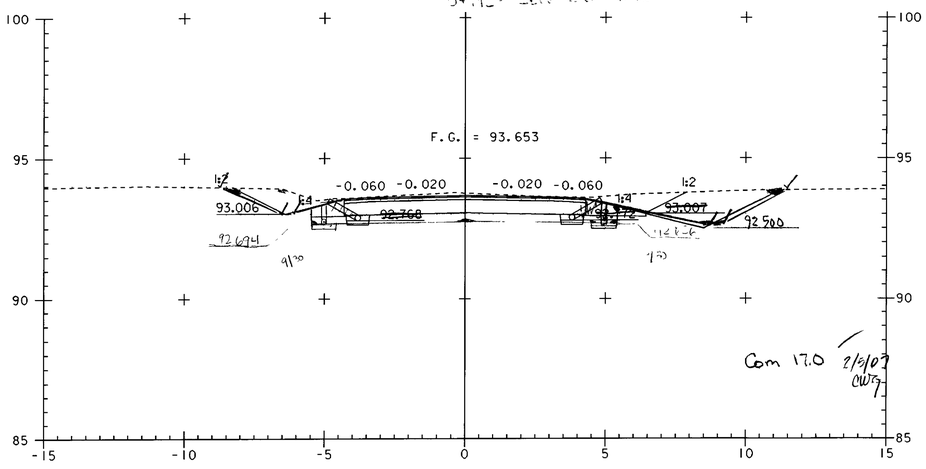

5+780

Com 17.0 2/6/07 CWG

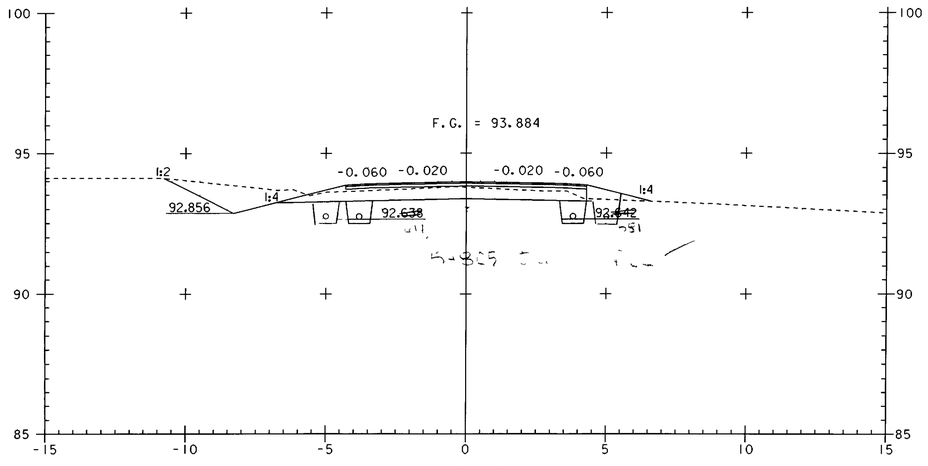

5+810

0 2 4 6 8 10
SCALE IN METERS

PROJECT NAME:	HIGHGATE - FRANKLIN
PROJECT NUMBER:	STP RS 0301(1) SA
FILE NAME: ...85c060\design\dc060x08.dgn	PLOT DATE: 09-MAY-2005
PROJECT LEADER: DELLASANTA	DRAWN BY: SQUAD B
DESIGNED BY: SQUAD B	CHECKED BY: SQUAD B
IPARM FILE NAME: dc060x081.i	SHEET 366 OF 450

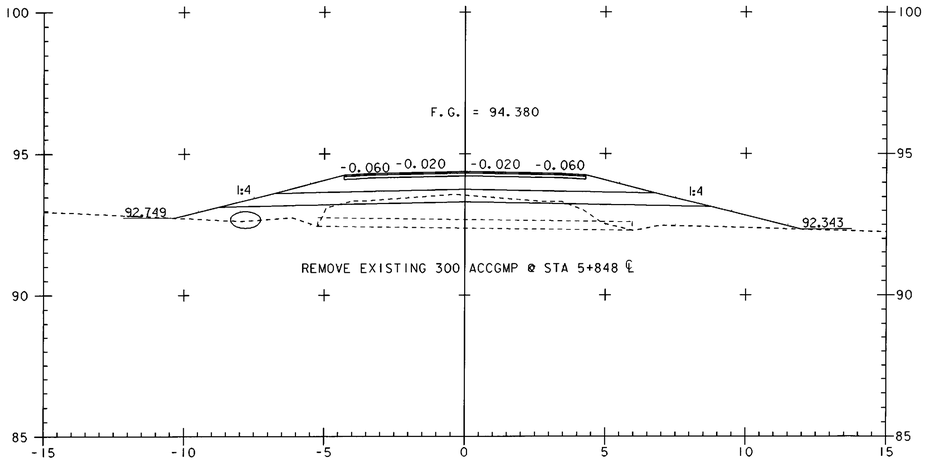

5+848

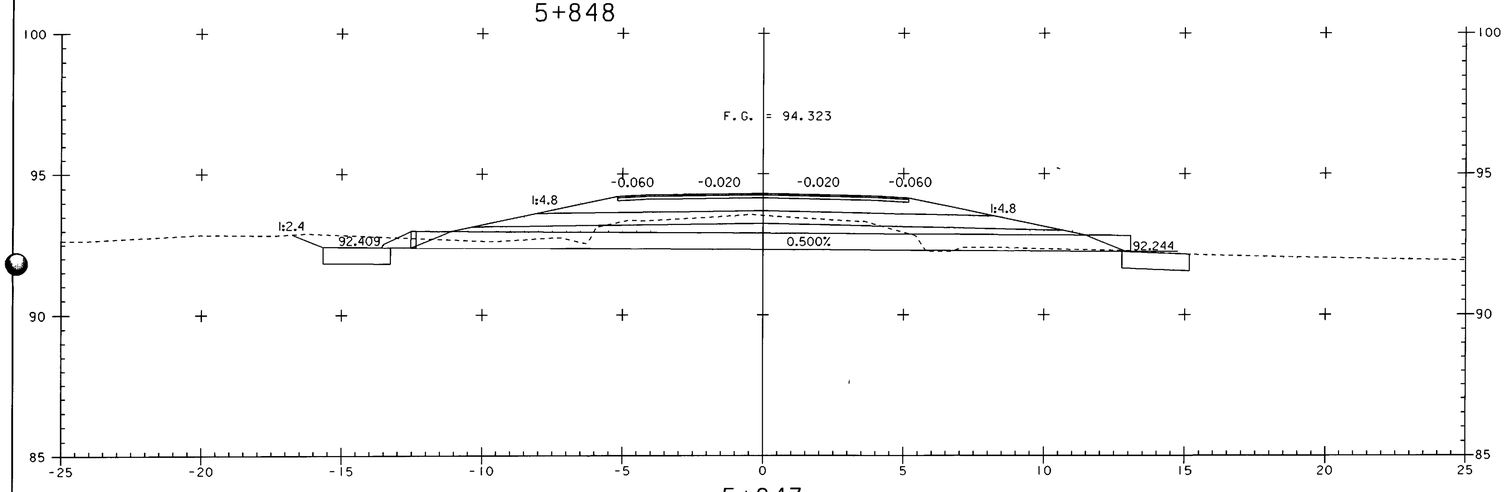

5+843

ASKEW = 56° 10' 08" LT

STA 5+840.380 END TAPER BEGIN FULL DEPTH SAND (450MM)

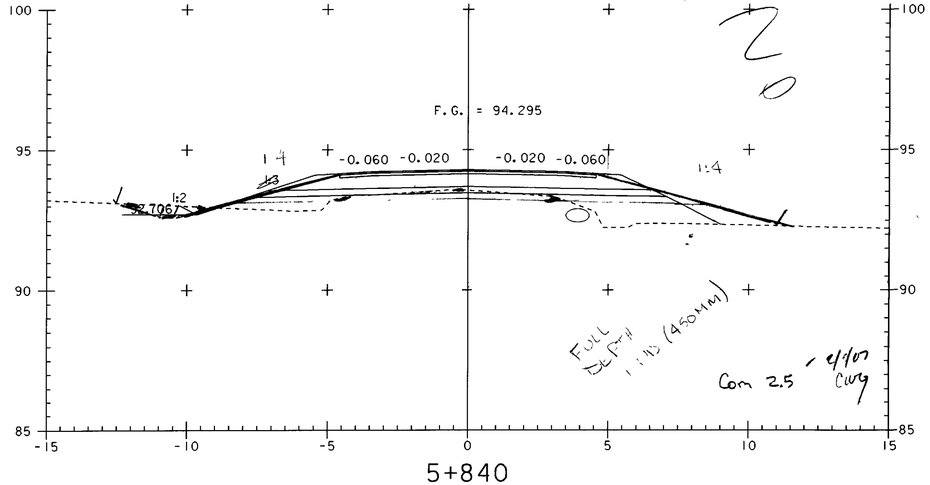

5+840

STA 5+838.640 BEGIN TAPER

0 2 4 6 8 10

SCALE IN METERS

PROJECT NAME:	HIGHGATE - FRANKLIN
PROJECT NUMBER:	STP RS 0301(1) SA
FILE NAME: ...85c060\design\dc060x08.dgn	PLOT DATE: 09-MAY-2005
PROJECT LEADER: DELLASANTA	DRAWN BY: SQUAD B
DESIGNED BY: SQUAD B	CHECKED BY: SQUAD B
IPARM FILE NAME: dc060x082.i	SHEET 367 OF 450

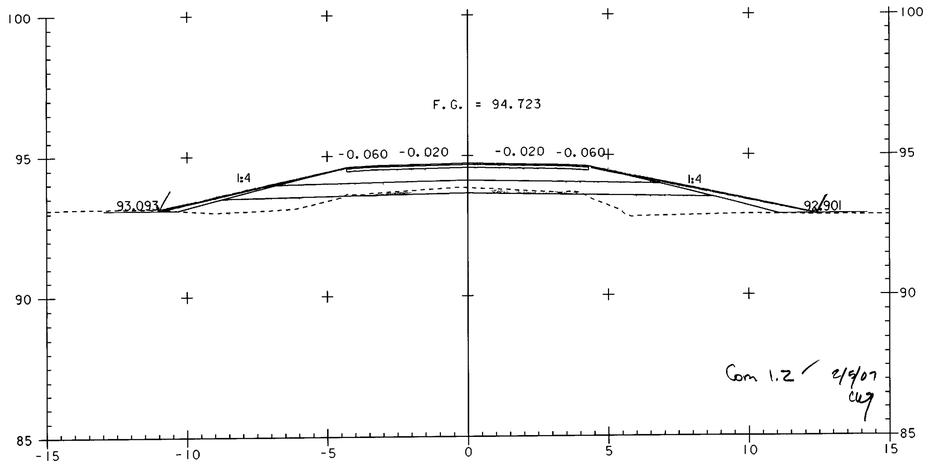

5+880

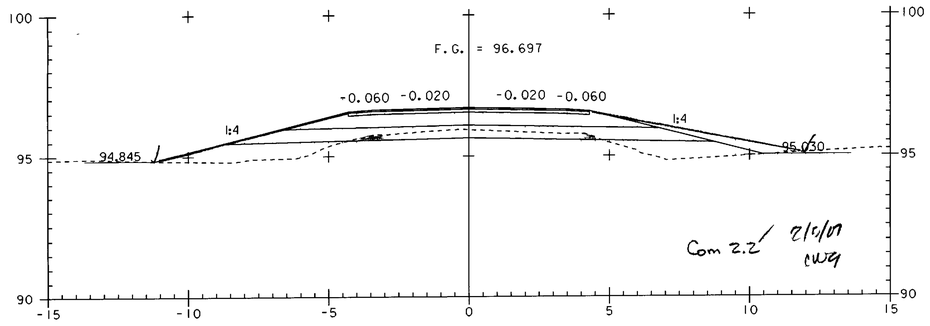

5+940

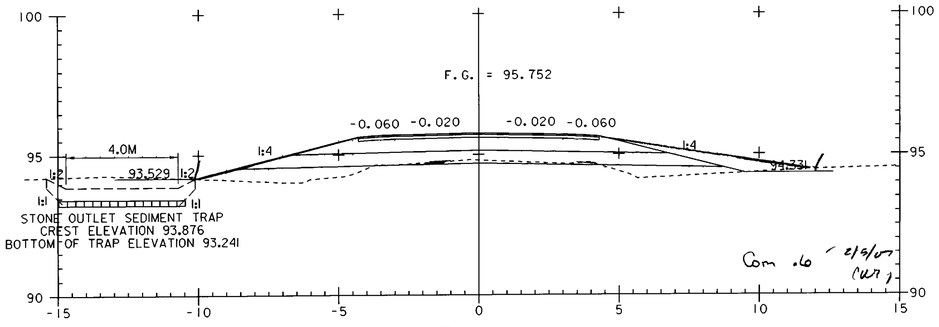

5+920

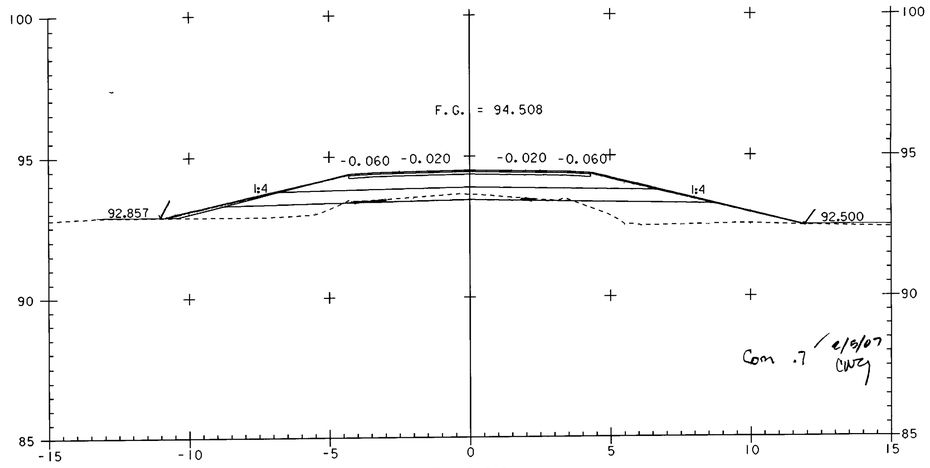

5+860

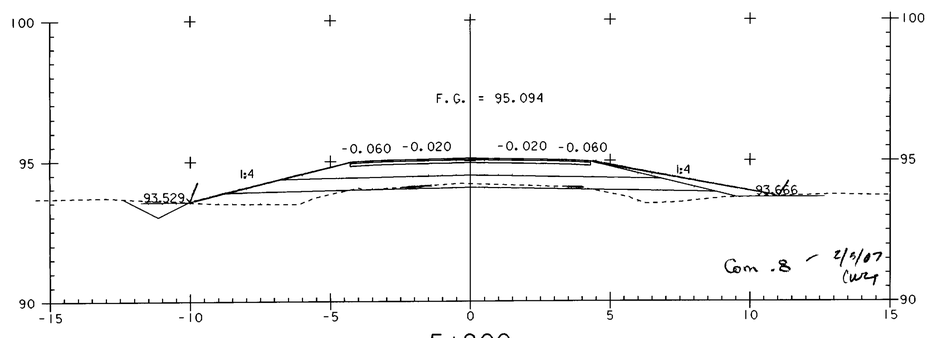

5+900

0 2 4 6 8 10
SCALE IN METERS

PROJECT NAME:	HIGHGATE - FRANKLIN
PROJECT NUMBER:	STP RS 0301(1) SA
FILE NAME: ...85c060\design\dc060x08.dgn	PLOT DATE: 09-MAY-2005
PROJECT LEADER: DELLASANTA	DRAWN BY: SQUAD B
DESIGNED BY: SQUAD B	CHECKED BY: SQUAD B
IPARM FILE NAME: dc060x083.i	SHEET 368 OF 450

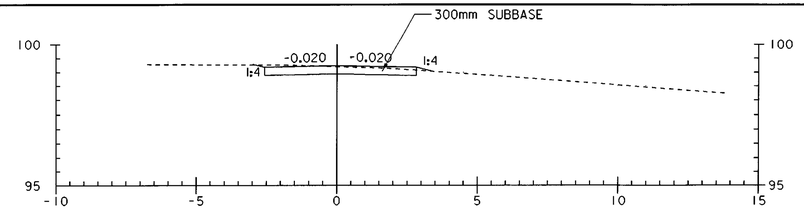

DRIVE AT 6+024 LT
SECTION A - A

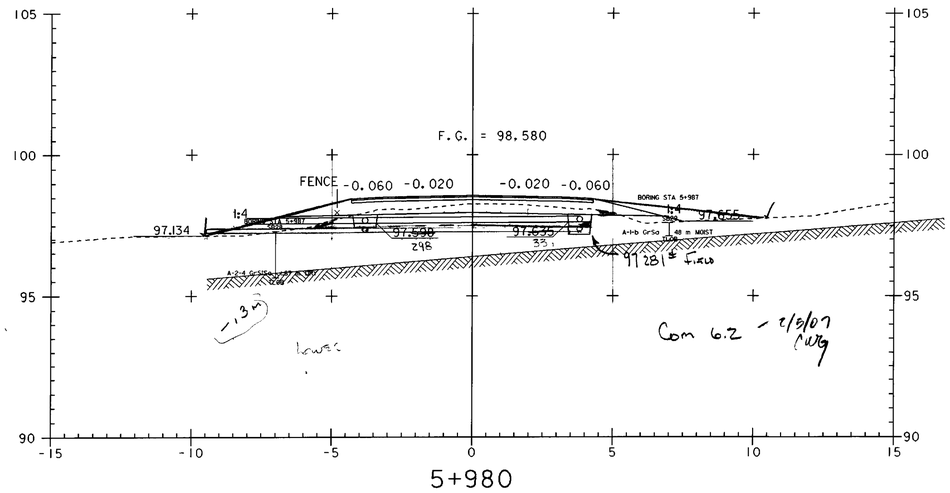

5+980

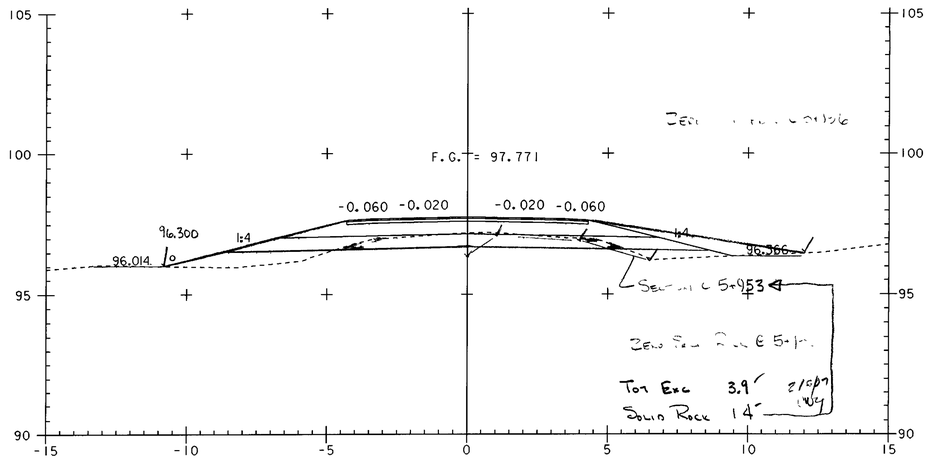

5+960

6+030 Zero Solid Rock

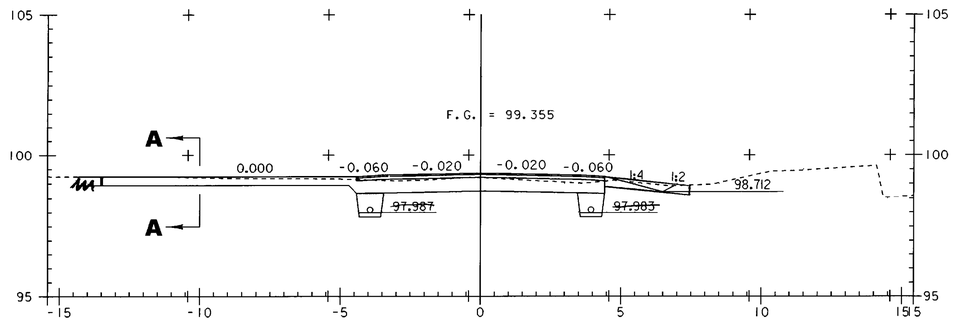

6+024

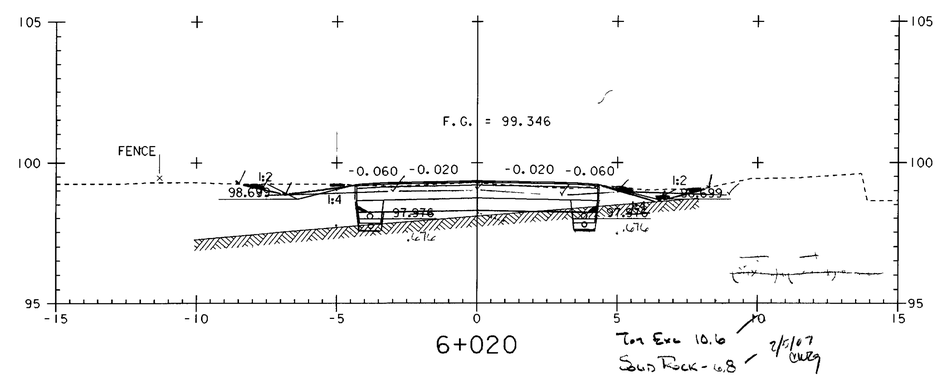

6+020

X-Section RWH 04/3/06

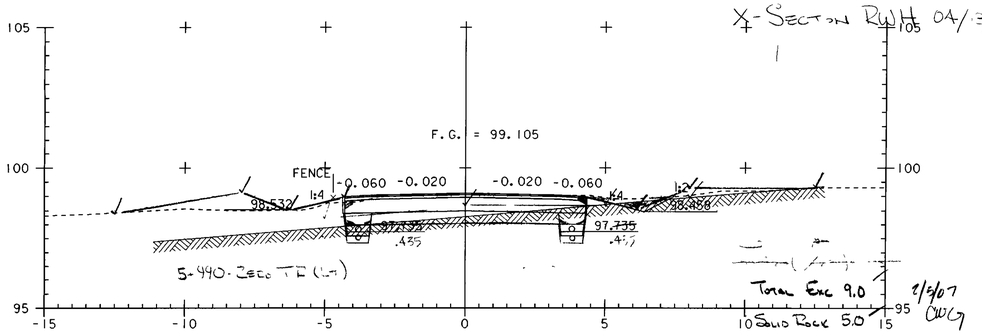

6+000

5+995 Zero Sol
5+985 Zero D

STA 5+943.780 END TAPER
STA 5+941.440 END FULL DEPTH SAND (450MM) BEGIN TAPER

0 2 4 6 8 10
SCALE IN METERS

PROJECT NAME: HIGHGATE - FRANKLIN	
PROJECT NUMBER: STP RS 0301(1) SA	
FILE NAME: ...85c060\design\dc060x08.dgn	PLOT DATE: 09-MAY-2005
PROJECT LEADER: DELLASANTA	DRAWN BY: SQUAD B
DESIGNED BY: SQUAD B	CHECKED BY: SQUAD B
IPARM FILE NAME: dc060x084.i	SHEET 369 OF 450

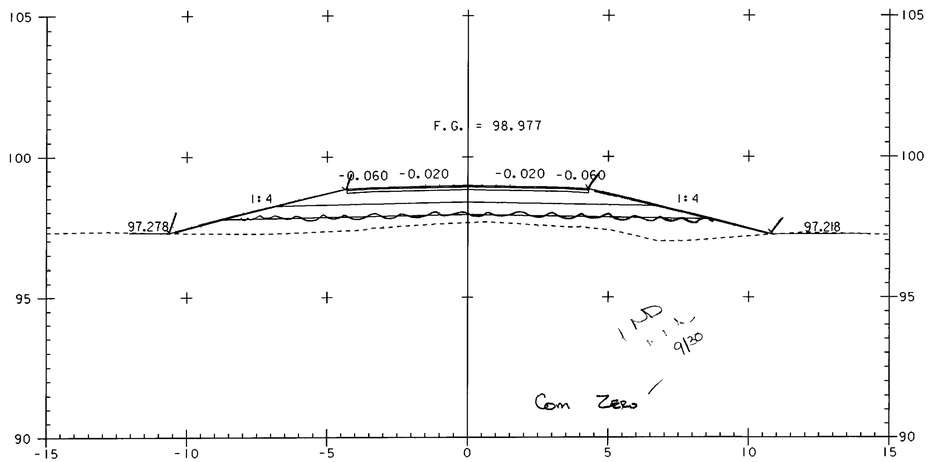

6+060

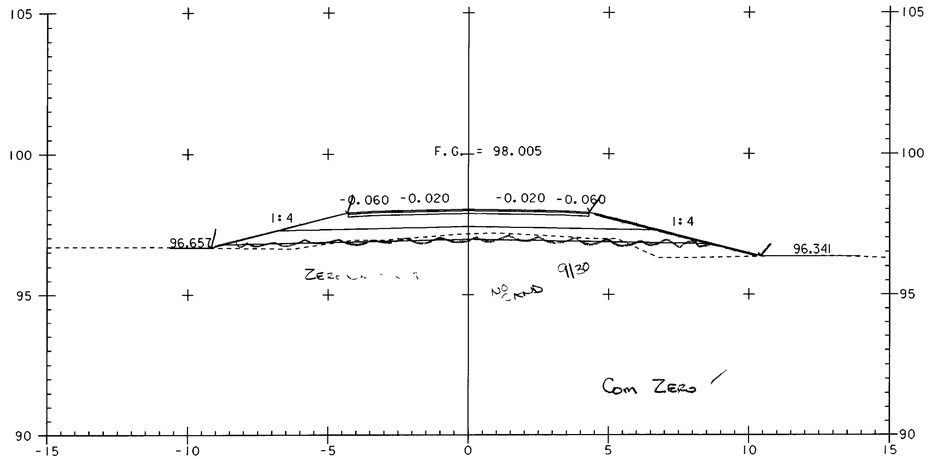

6+100

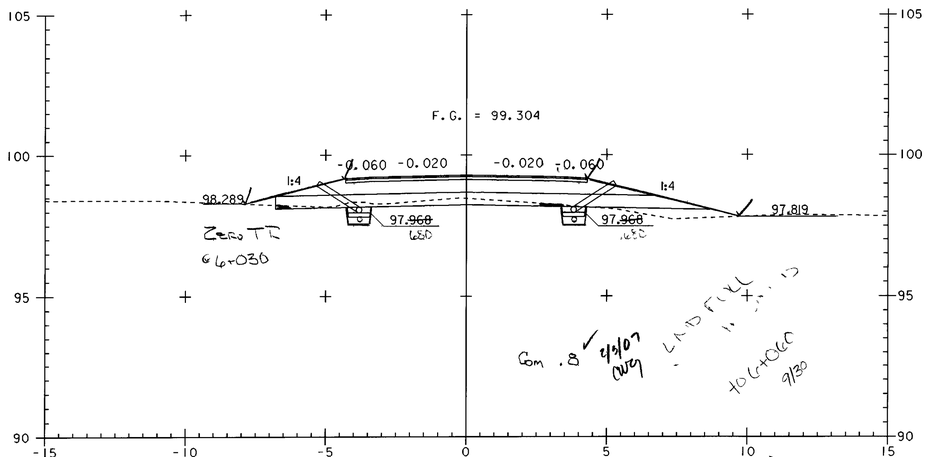

6+040 (Zero Depth Taper)

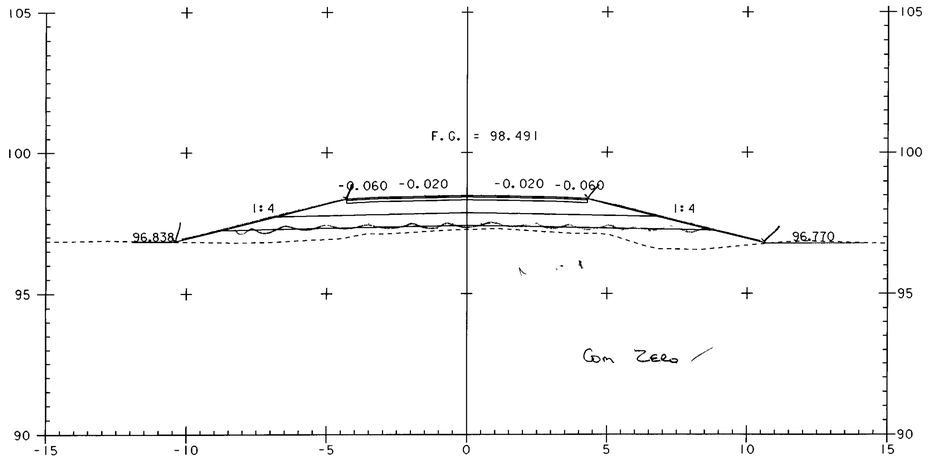

6+080

STA 6+038.060 END TAPER BEGIN FULL DEPTH SAND (450MM)
STA 6+036.200 BEGIN TAPER

0 2 4 6 8 10
SCALE IN METERS

PROJECT NAME:	HIGHGATE - FRANKLIN
PROJECT NUMBER:	STP RS 0301(I) SA
FILE NAME: ...85c060\design\dc060x08.dgn	PLOT DATE: 09-MAY-2005
PROJECT LEADER: DELLASANTA	DRAWN BY: SQUAD B
DESIGNED BY: SQUAD B	CHECKED BY: SQUAD B
IPARM FILE NAME: dc060x085.i	SHEET 370 OF 450

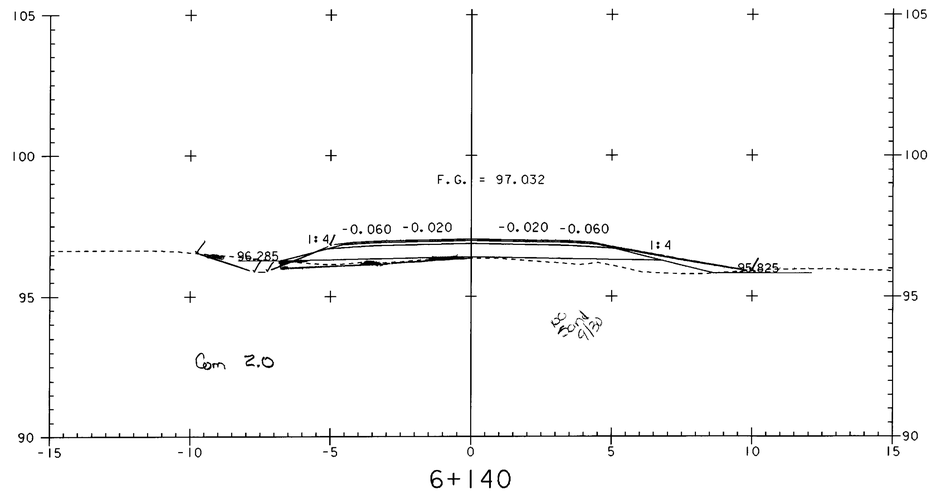

6+140

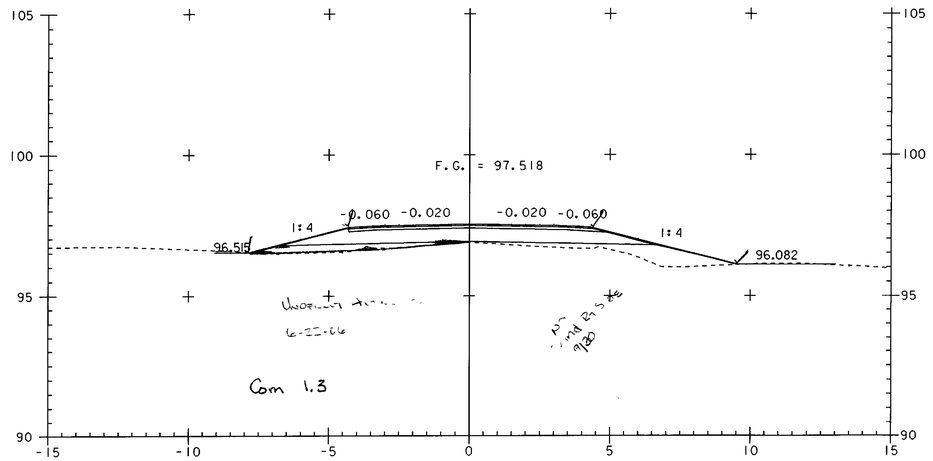

6+120

6+160

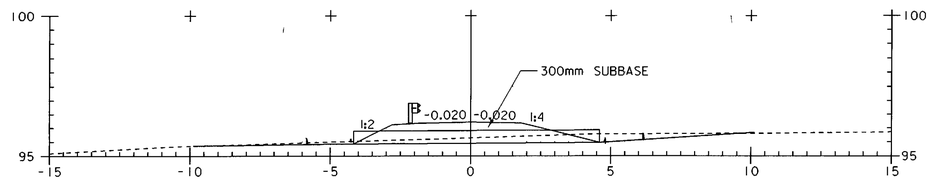

SECTION A - A
DRIVE @ 6+150 RT

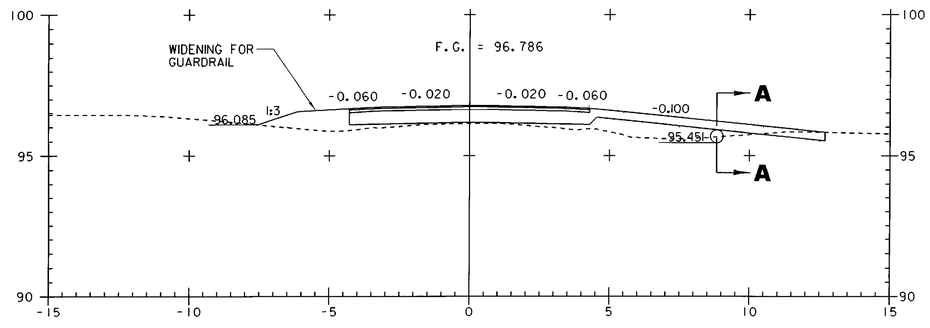

6+150

STA 6+110.080 END TAPER
STA 6+108.420 END FULL DEPTH SAND (450MM) BEGIN TAPER

0 2 4 6 8 10
SCALE IN METERS

PROJECT NAME:	HIGHGATE - FRANKLIN
PROJECT NUMBER:	STP RS 0301(I) SA
FILE NAME: ...85c060\design\dc060x08.dgn	PLOT DATE: 09-MAY-2005
PROJECT LEADER: DELLASANTA	DRAWN BY: SQUAD B
DESIGNED BY: SQUAD B	CHECKED BY: SQUAD B
IPARM FILE NAME: dc060x086.i	SHEET 371 OF 450

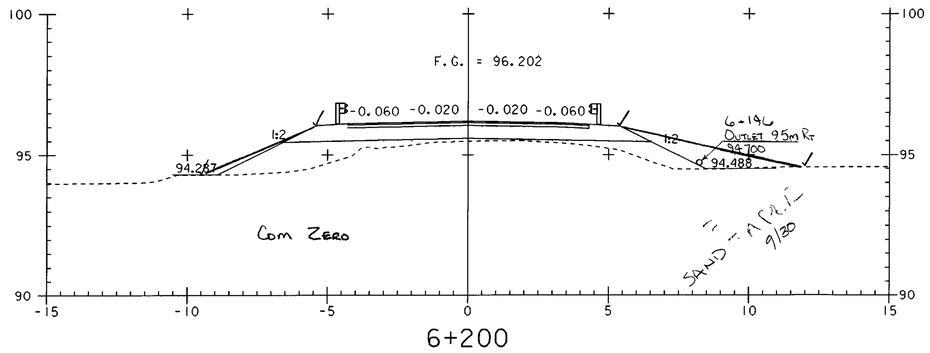

6+200

STA 6+198.714 END TAPER
STA 6+194.904 END FULL DEPTH SAND (450MM) BEGIN TAPER

STA 6+184.156 END TAPER BEGIN FULL DEPTH SAND (450MM)
STA 6+182.306 BEGIN TAPER

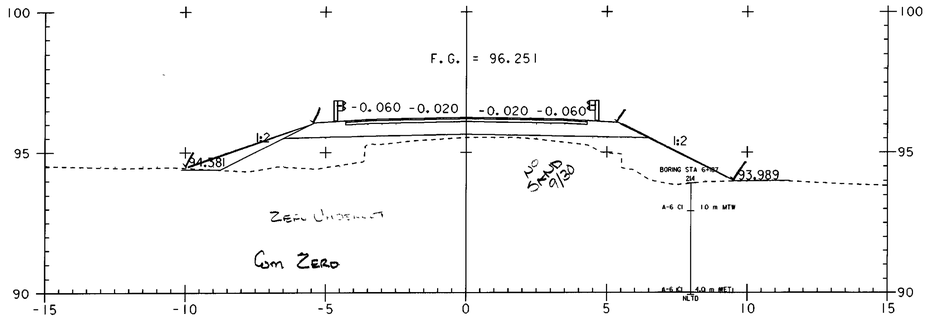

6+180

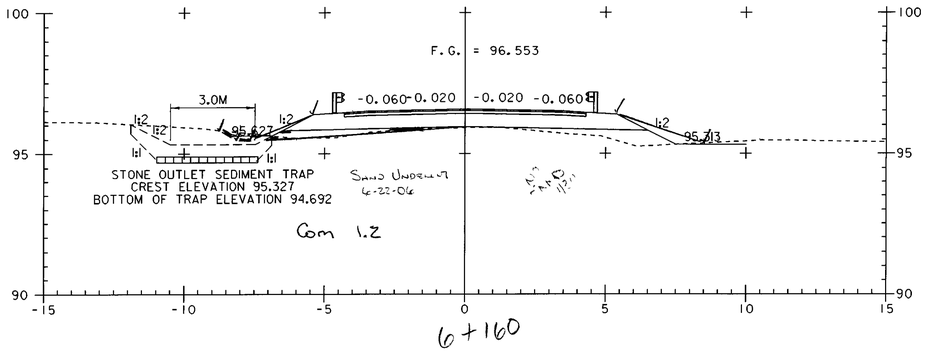

6+160

0 2 4 6 8 10
SCALE IN METERS

PROJECT NAME:	HIGHGATE - FRANKLIN
PROJECT NUMBER:	STP RS 0301(1) SA
FILE NAME: ...85c060\design\dc060x08.dgn	PLOT DATE: 09-MAY-2005
PROJECT LEADER: DELLASANTA	DRAWN BY: SQUAD B
DESIGNED BY: SQUAD B	CHECKED BY: SQUAD B
IPARM FILE NAME: dc060x087.i	SHEET 372 OF 450

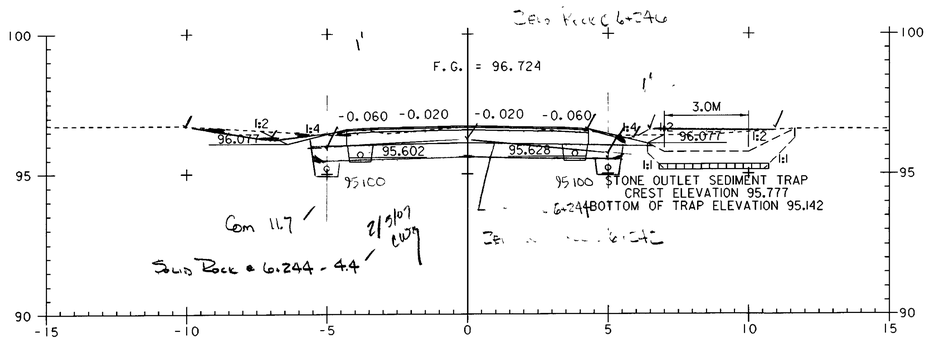

6+240

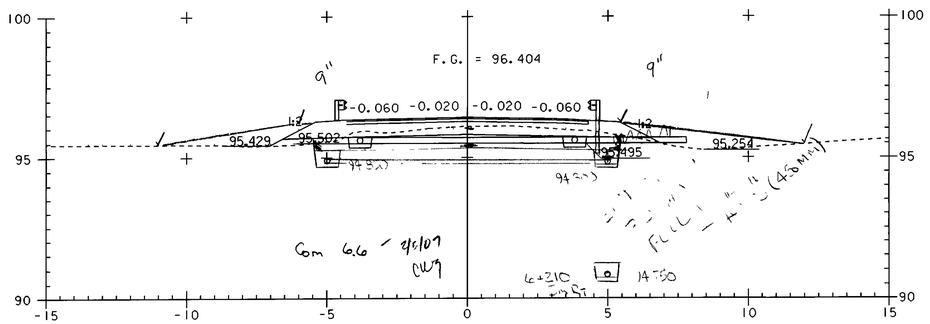

6+220

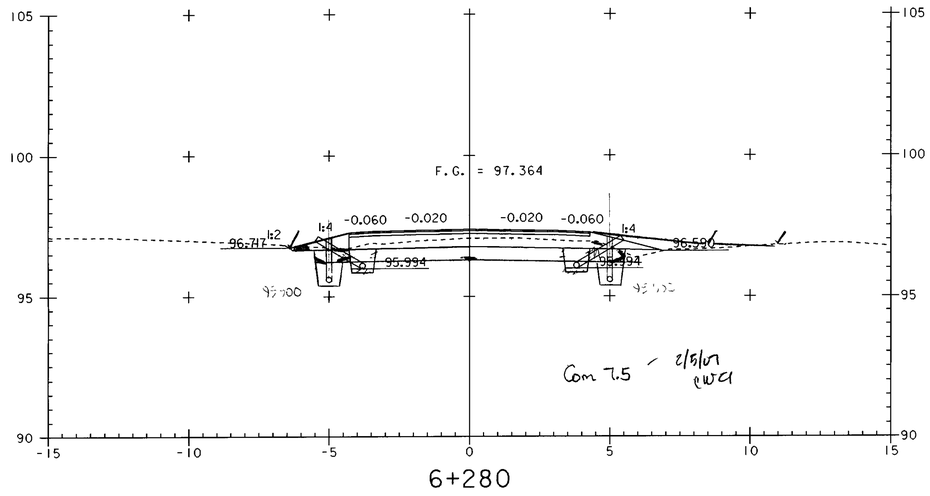

6+280

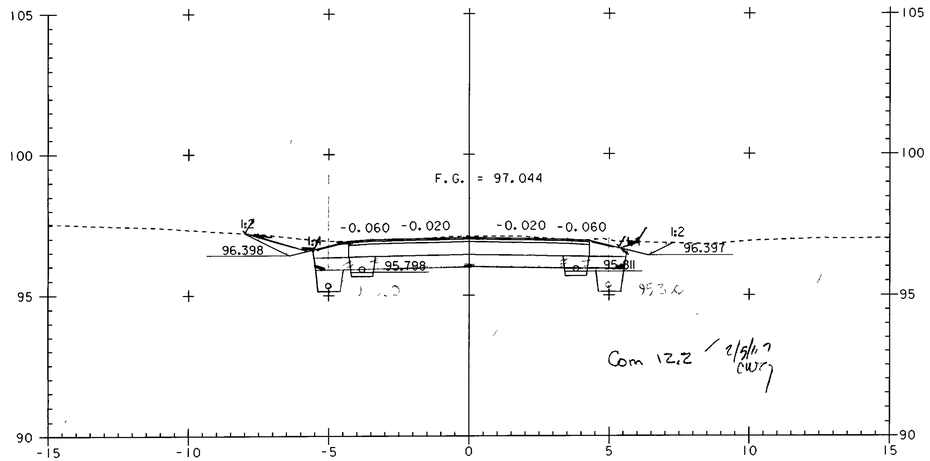

6+260

0 2 4 6 8 10
SCALE IN METERS

PROJECT NAME:	HIGHGATE - FRANKLIN
PROJECT NUMBER:	STP RS 0301(1) SA
FILE NAME: ...85c060\design\dc060x08.dgn	PLOT DATE: 09-MAY-2005
PROJECT LEADER: DELLASANTA	DRAWN BY: SQUAD B
DESIGNED BY: SQUAD B	CHECKED BY: SQUAD B
IPARM FILE NAME: dc060x088.i	SHEET 373 OF 450

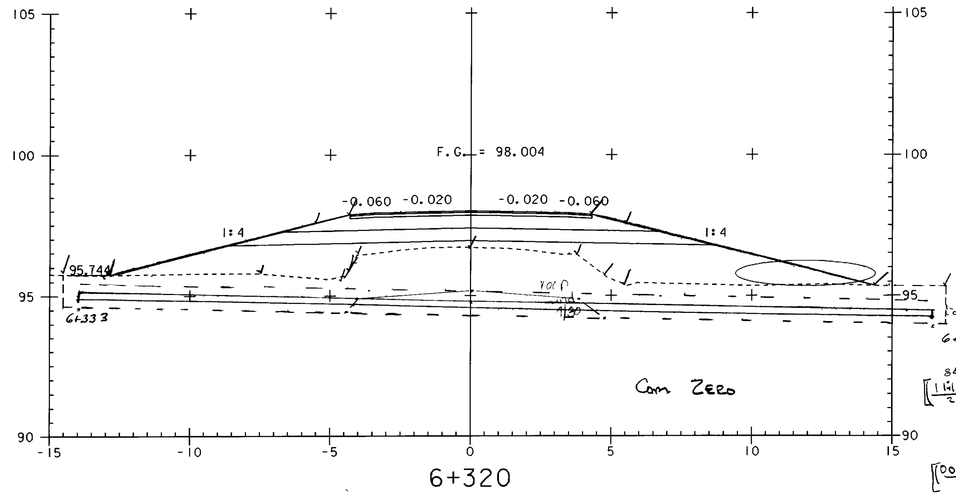

6+320

Granular Backfill for Structures

.75m (Deep) x 315m (Long) x 115m (wide) = 27.2 m³

6" Conduit (.3m Undercut)

6+326 .3m over conduit

GB for Struct

$\left[\left(\frac{1.1+1.3}{2}\times 7\right)+\left(\frac{1.3+1.1}{2}\times 2.9\right)+\left(\frac{1.1+1.5}{2}\times 3\right)+\left(1.5\times 9.1\right)+\left(\frac{1.5+1.2}{2}\times 7\right)+\left(\frac{1.2+1.3}{2}\times 11.4\right)\right] = 41.1\,m^2 \times 1.15\,m = 47.3\,m^3$

Over 1.5m

$\left[\left(\frac{0.0+0.5}{2}\times .3\right)+\left(\frac{0.5+0.9}{2}\times 4.0\right)+\left(\frac{0.9+0.6}{2}\times 3.9\right)+\left(\frac{0.6+0.0}{2}\times 0.9\right)\right] = 61\,m^2 \times 1.15\,m = 70\,m^3 \times 1.5 = 105\,m^3$

578 m³ WRF 07-17-06

Say 58

RWH 12-27-06

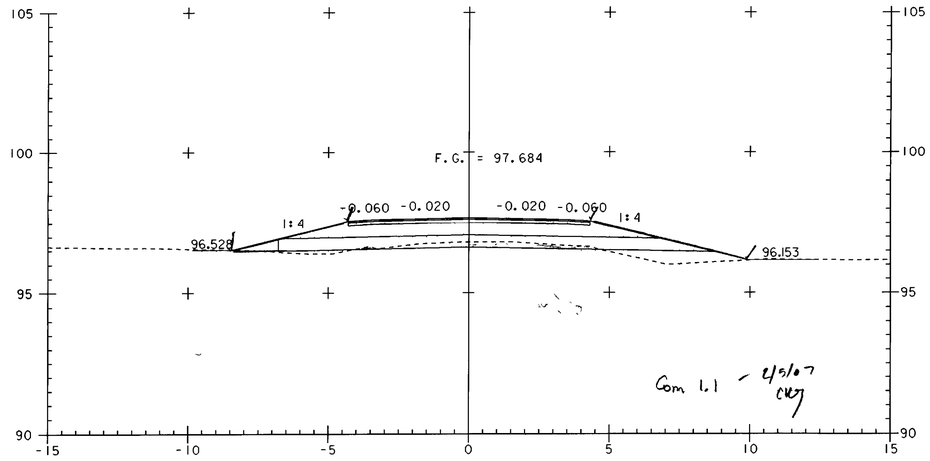

6+300

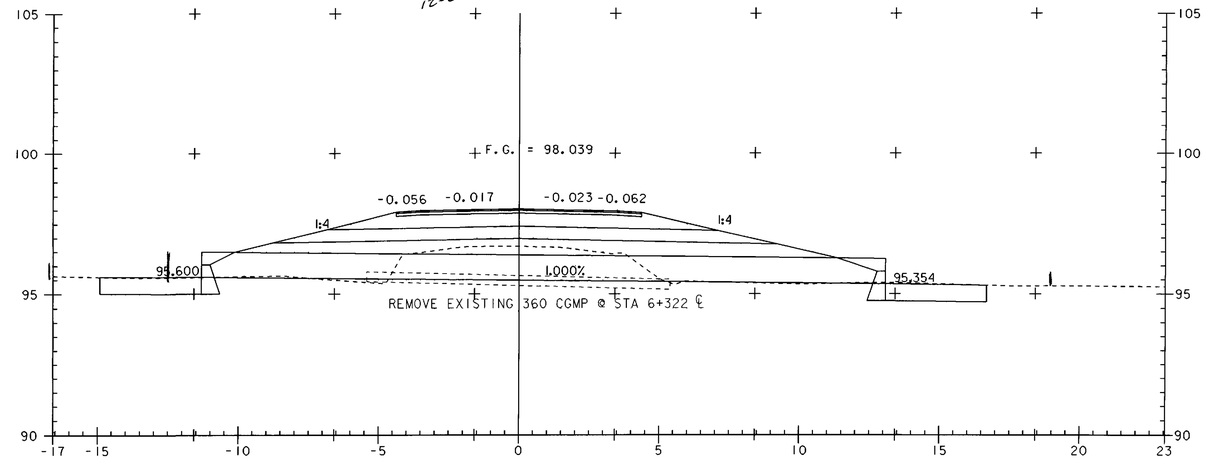

6+322

ASKEW = 79° 36′ 24" LT

STA 6+295.580 END TAPER BEGIN FULL DEPTH SAND (450MM)
STA 6+293.880 BEGIN TAPER

0 2 4 6 8 10
SCALE IN METERS

PROJECT NAME: HIGHGATE - FRANKLIN	
PROJECT NUMBER: STP RS 0301(1) SA	
FILE NAME: ...85c060\design\dc060x08.dgn	PLOT DATE: 09-MAY-2005
PROJECT LEADER: DELLASANTA	DRAWN BY: SQUAD B
DESIGNED BY: SQUAD B	CHECKED BY: SQUAD B
IPARM FILE NAME: dc060x089.i	SHEET 374 OF 450

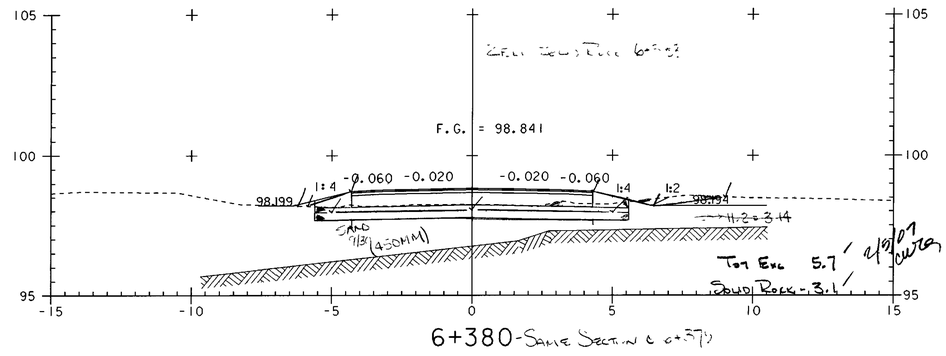

6+380-Same Section @ 6+375

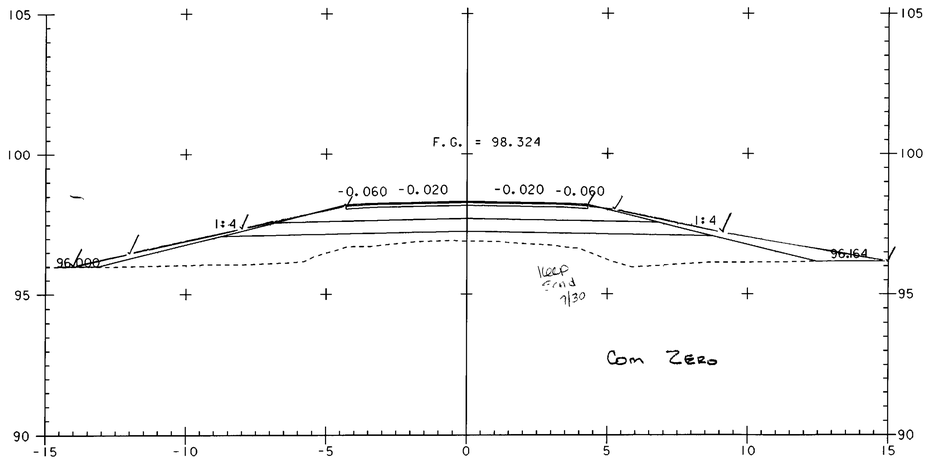

6+340

STA 6+368.720 END TAPER
STA 6+366.840 END FULL DEPTH SAND (450MM) BEGIN TAPER

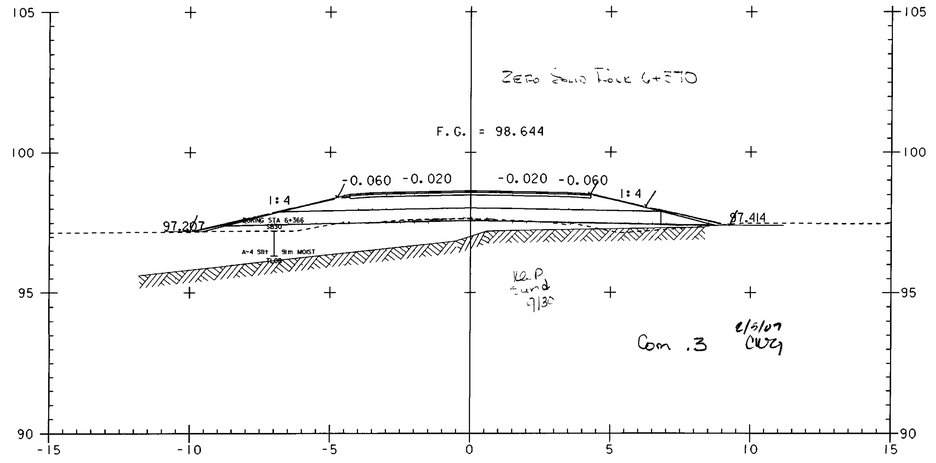

6+360

0 2 4 6 8 10
SCALE IN METERS

PROJECT NAME:	HIGHGATE - FRANKLIN
PROJECT NUMBER:	STP RS 0301(1) SA
FILE NAME: ...85c060\design\dc060x08.dgn	PLOT DATE: 09-MAY-2005
PROJECT LEADER: DELLASANTA	DRAWN BY: SQUAD B
DESIGNED BY: SQUAD B	CHECKED BY: SQUAD B
IPARM FILE NAME: dc060x0810.i	SHEET 375 OF 450

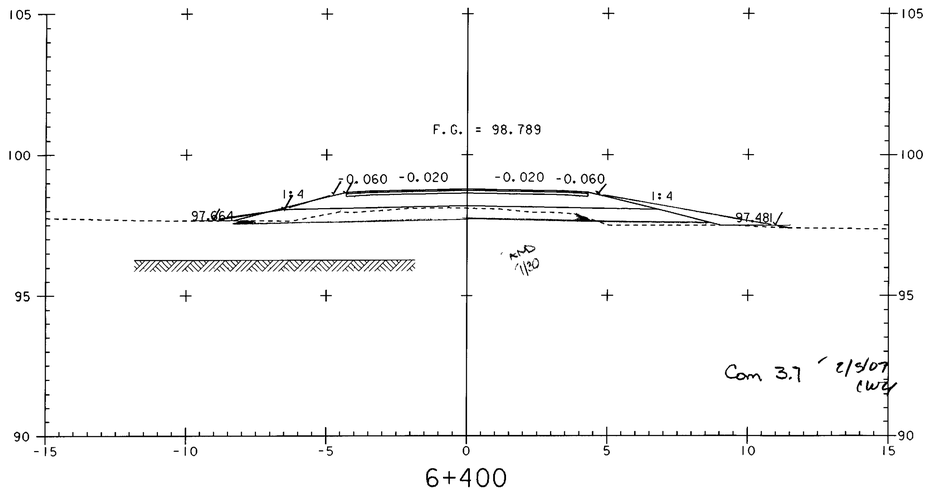

6+400

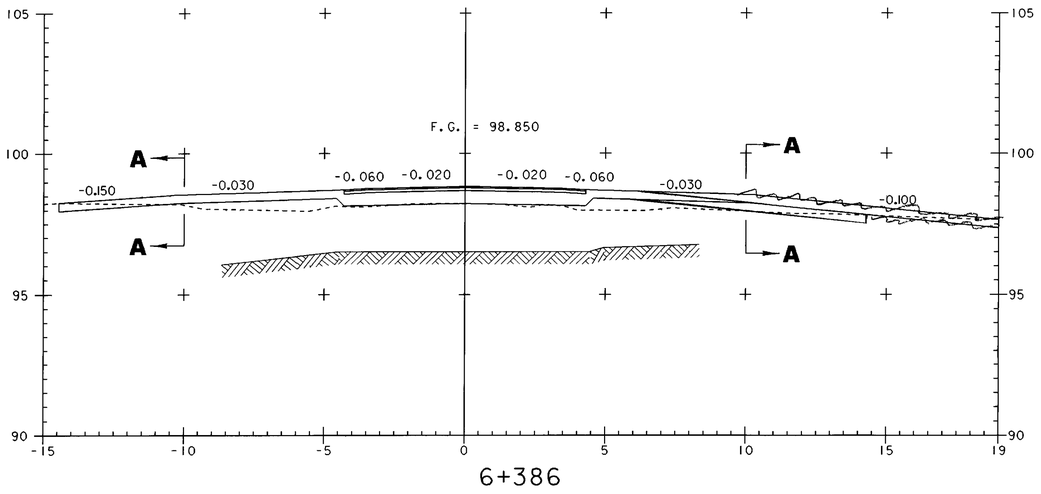

6+386

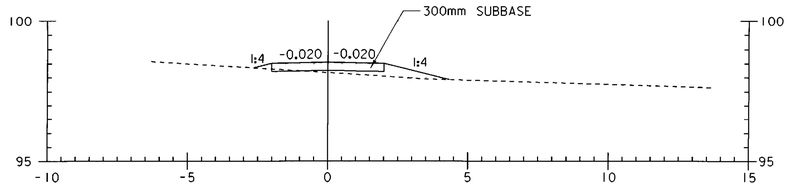

DRIVE @ 6+386 LT
SECTION A - A

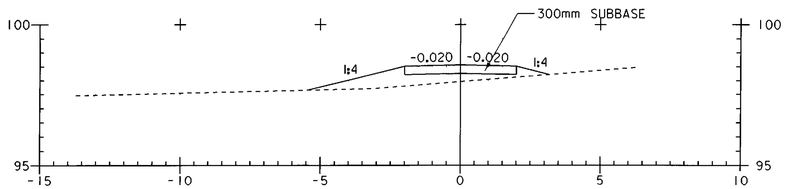

DRIVE @ 6+386 RT
SECTION A - A

0 2 4 6 8 10
SCALE IN METERS

PROJECT NAME:	HIGHGATE - FRANKLIN
PROJECT NUMBER:	STP RS 0301(1) SA
FILE NAME: ...85c060\design\dc060x08.dgn	PLOT DATE: 09-MAY-2005
PROJECT LEADER: DELLASANTA	DRAWN BY: SQUAD B
DESIGNED BY: SQUAD B	CHECKED BY: SQUAD B
IPARM FILE NAME: dc060x08ll.i	SHEET 376 OF 450

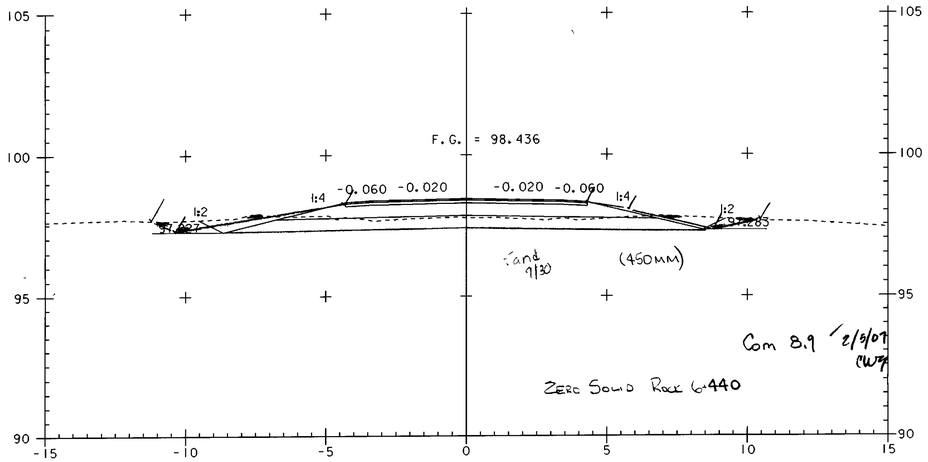

6+440

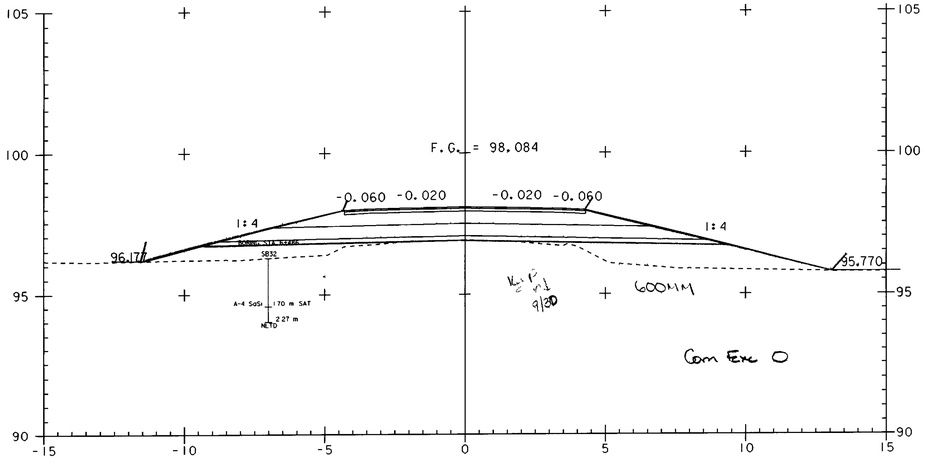

6+480

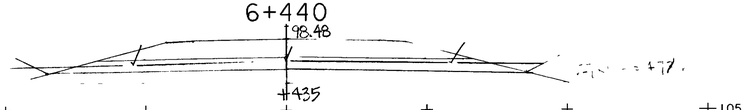

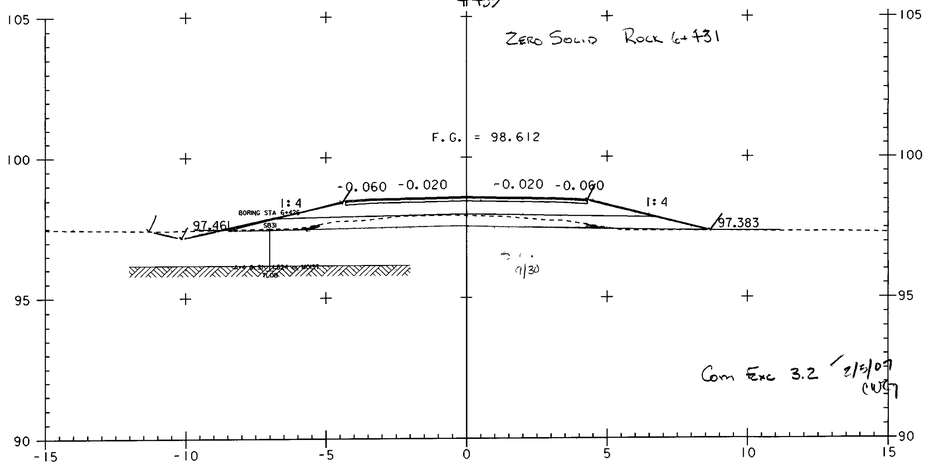

6+420

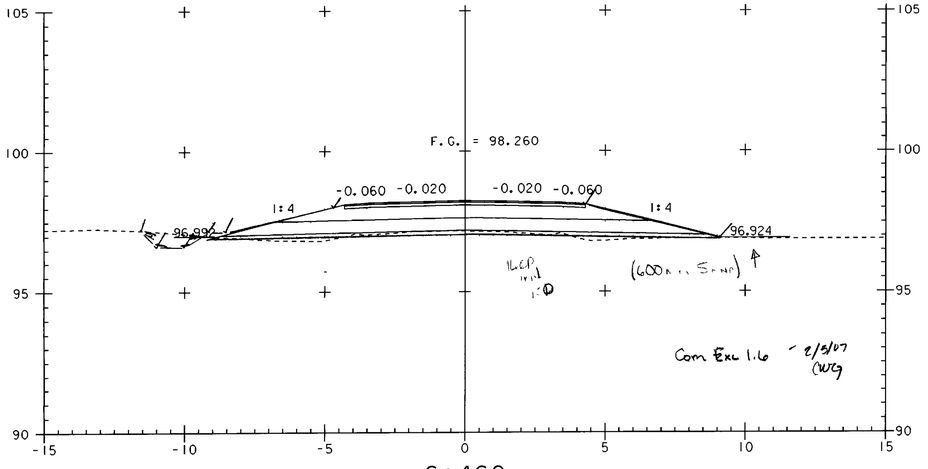

6+460

STA 6+443.800 END TAPER BEGIN FULL DEPTH SAND (450MM)
STA 6+442.031 BEGIN TAPER

0 2 4 6 8 10
SCALE IN METERS

PROJECT NAME:	HIGHGATE - FRANKLIN
PROJECT NUMBER:	STP RS 0301(1) SA
FILE NAME: ...85c060\design\dc060x08.dgn	PLOT DATE: 09-MAY-2005
PROJECT LEADER: DELLASANTA	DRAWN BY: SQUAD B
DESIGNED BY: SQUAD B	CHECKED BY: SQUAD B
IPARM FILE NAME: dc060x0812.1	SHEET 377 OF 450

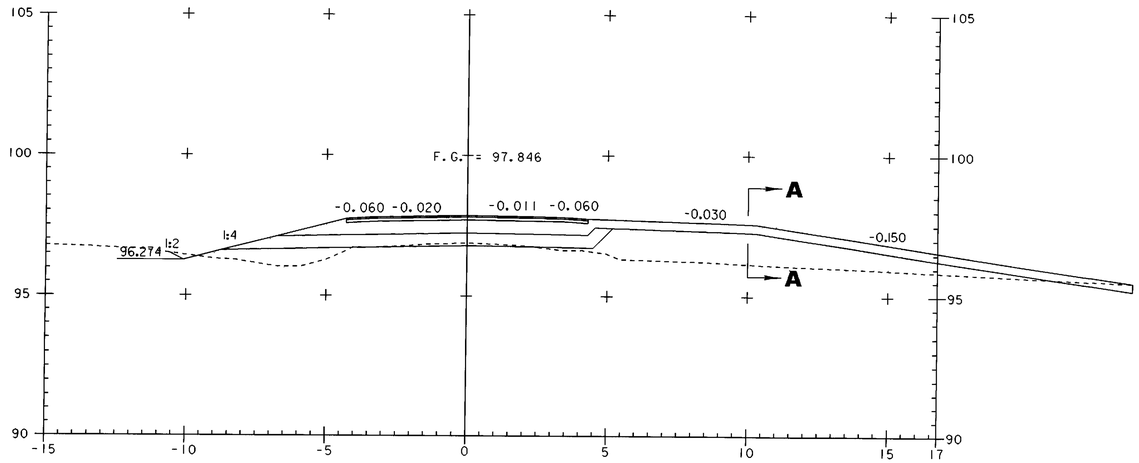

6+507

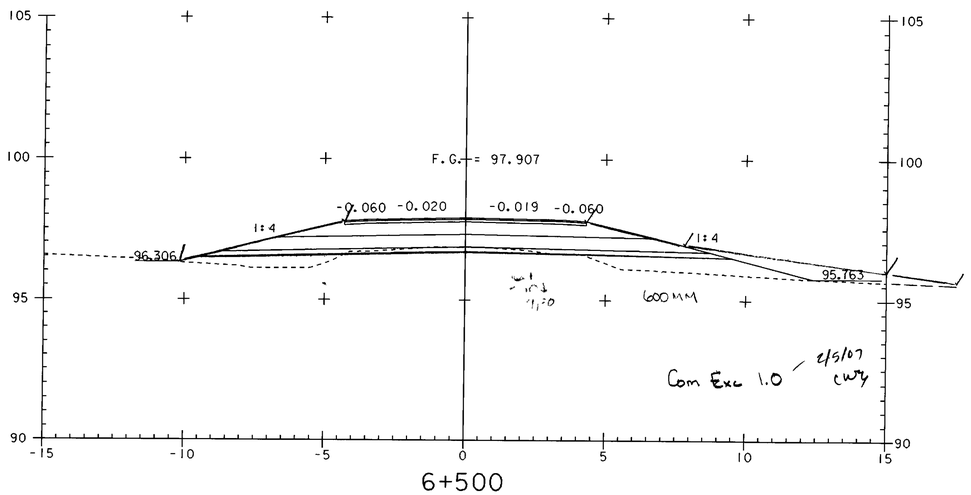

6+500

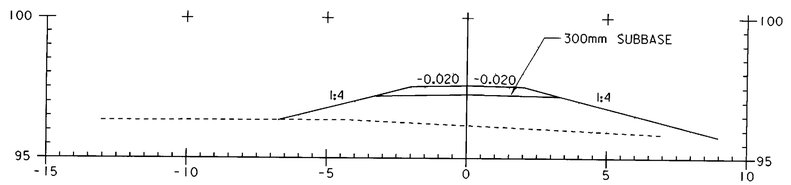

DRIVE AT 6+507 RT
SECTION A - A

0 2 4 6 8 10
SCALE IN METERS

PROJECT NAME:	HIGHGATE - FRANKLIN
PROJECT NUMBER:	STP RS 0301(I) SA
FILE NAME: ...85c060\design\dc060x08.dgn	PLOT DATE: 09-MAY-2005
PROJECT LEADER: DELLASANTA	DRAWN BY: SQUAD B
DESIGNED BY: SQUAD B	CHECKED BY: SQUAD B
IPARM FILE NAME: dc060x0813.i	SHEET 378 OF 450

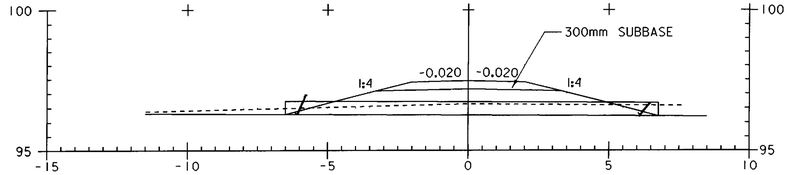

DRIVE AT 6+511 LT
SECTION A - A

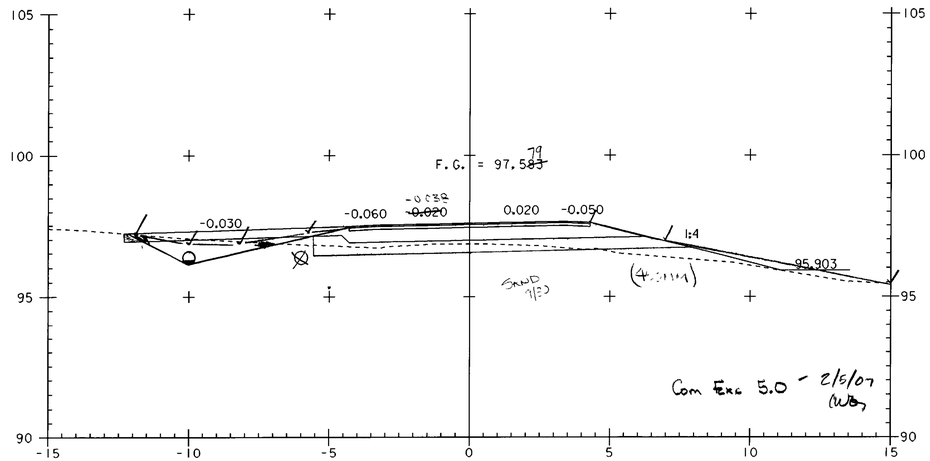

6+540

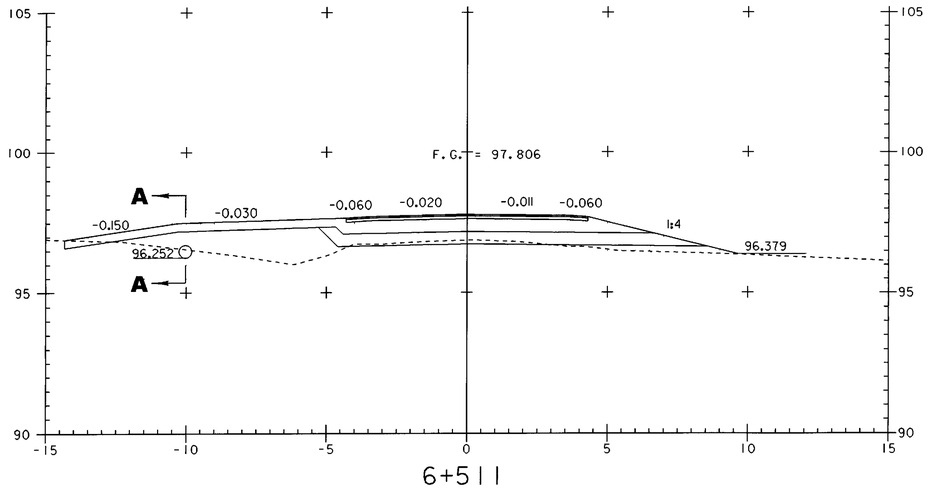

6+511

STA 6+536.240 END TAPER
STA 6+534.480 END FULL DEPTH SAND (450MM) BEGIN TAPER

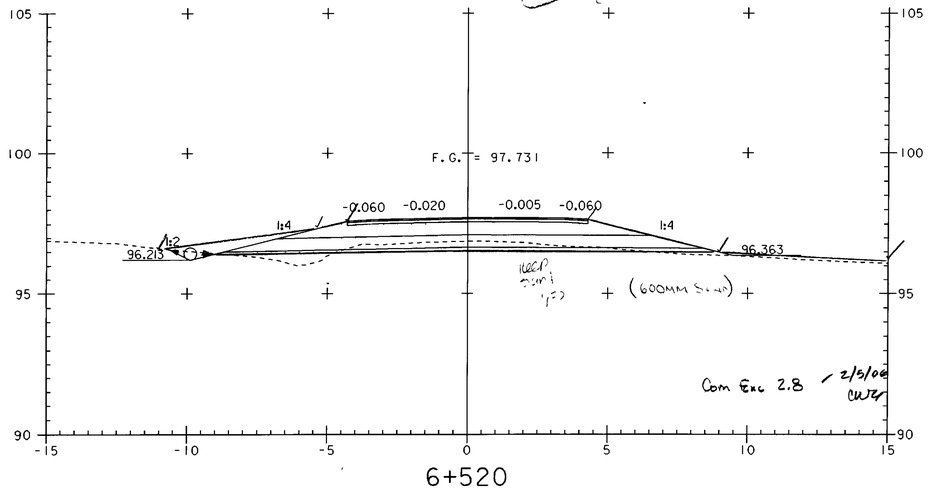

6+520

0 2 4 6 8 10
SCALE IN METERS

PROJECT NAME:	HIGHGATE - FRANKLIN
PROJECT NUMBER:	STP RS 0301(1) SA
FILE NAME: ...85c060\design\dc060x08.dgn	PLOT DATE: 09-MAY-2005
PROJECT LEADER: DELLASANTA	DRAWN BY: SQUAD B
DESIGNED BY: SQUAD B	CHECKED BY: SQUAD B
IPARM FILE NAME: dc060x0814.i	SHEET 379 OF 450

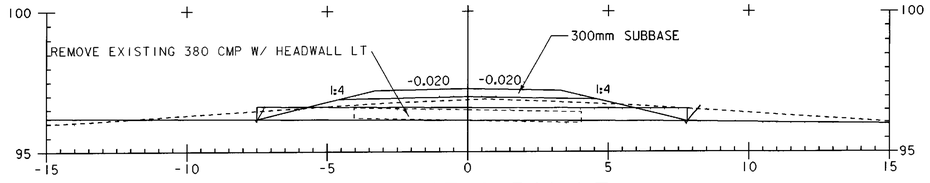

DRIVE AT 6+541 LT
SECTION A - A

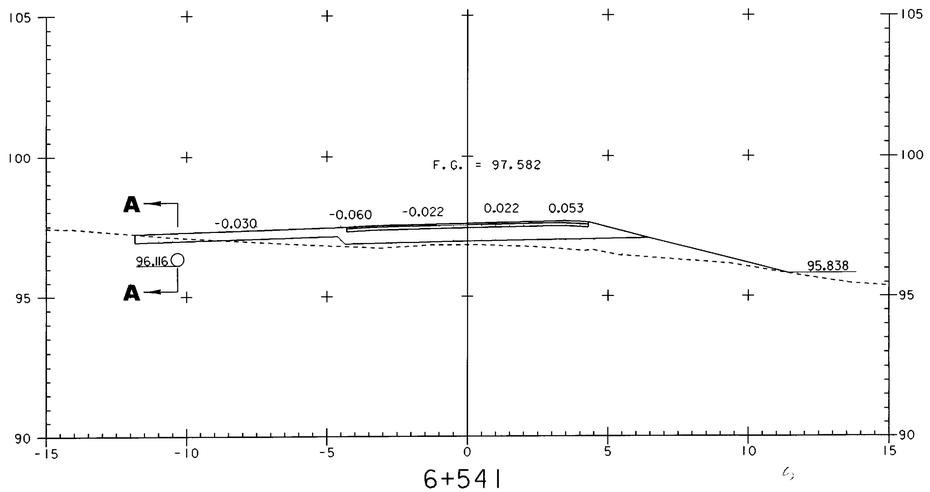

6+541

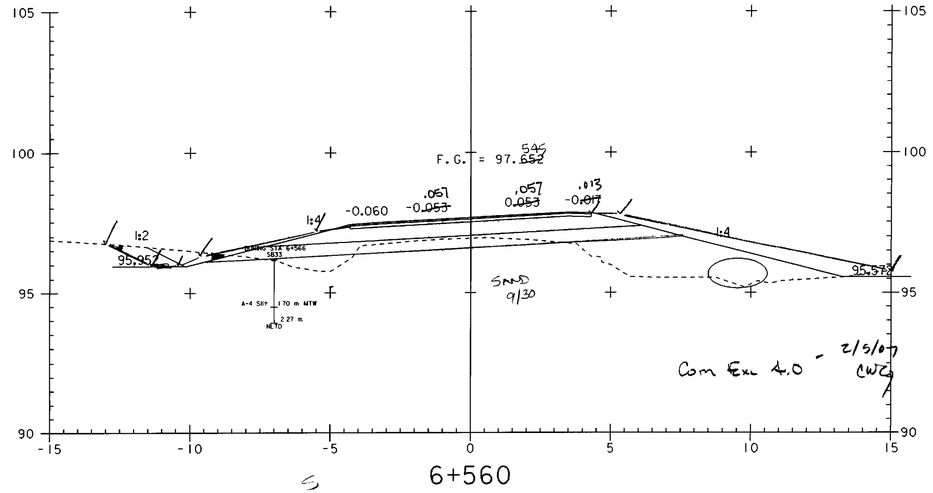

6+560

Com Ex 4.0 - 2/5/07 CWC

0 2 4 6 8 10
SCALE IN METERS

PROJECT NAME:	HIGHGATE - FRANKLIN
PROJECT NUMBER:	STP RS 0301(1) SA
FILE NAME: ...85c060\design\dc060x08.dgn	PLOT DATE: 09-MAY-2005
PROJECT LEADER: DELLASANTA	DRAWN BY: SQUAD B
DESIGNED BY: SQUAD B	CHECKED BY: SQUAD B
IPARM FILE NAME: dc060x0815.i	SHEET 380 OF 450

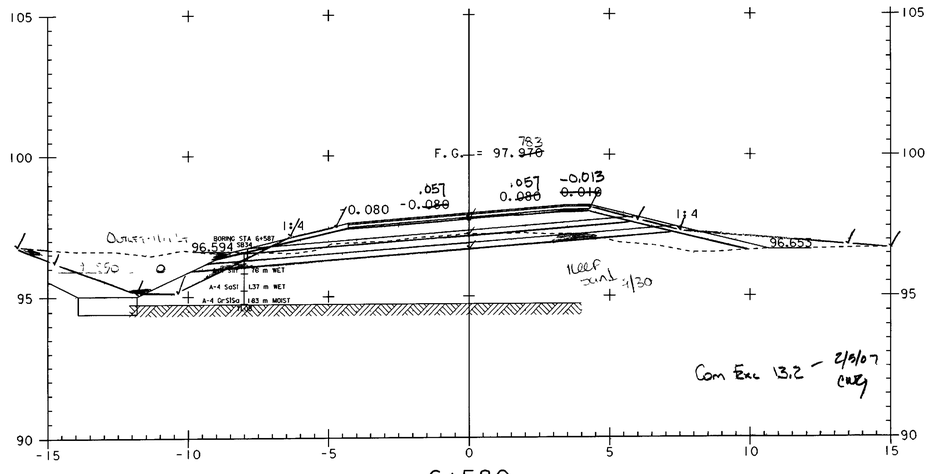

6+580

S/TA 6+571.900 END TAPER BEGIN FULL DEPTH SAND (450MM)
S/TA 6+570.220 BEGIN TAPER

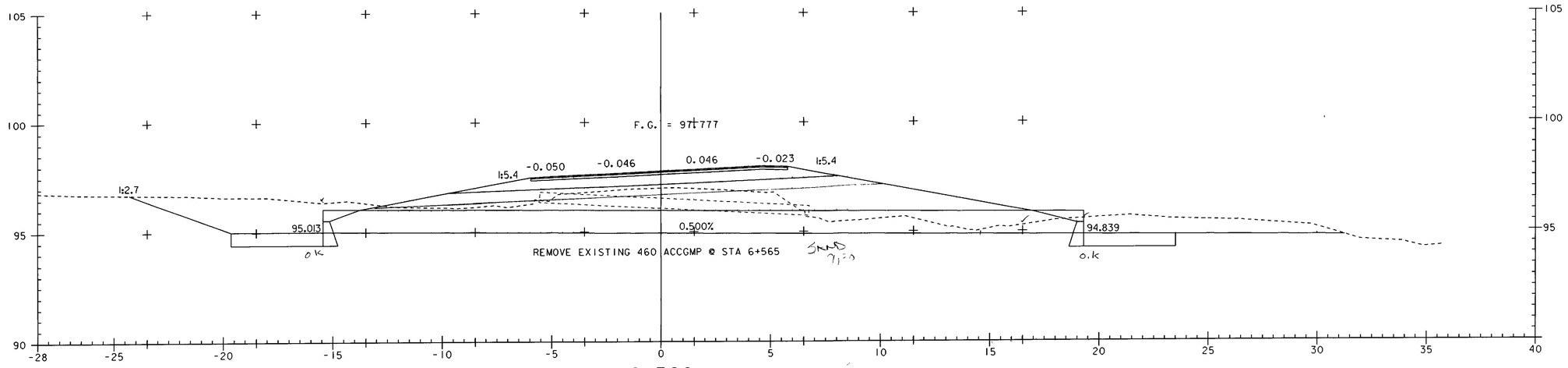

6+566
ASKEW = 47°50'26" LT

0 2 4 6 8 10
SCALE IN METERS

PROJECT NAME:	HIGHGATE - FRANKLIN
PROJECT NUMBER:	STP RS 0301(1) SA
FILE NAME: ...85c060\design\dc060x08.dgn	PLOT DATE: 09-MAY-2005
PROJECT LEADER: DELLASANTA	DRAWN BY: SQUAD B
DESIGNED BY: SQUAD B	CHECKED BY: SQUAD B
IPARM FILE NAME: dc060x0816.i	SHEET 381 OF 450

PROFILE TH #25

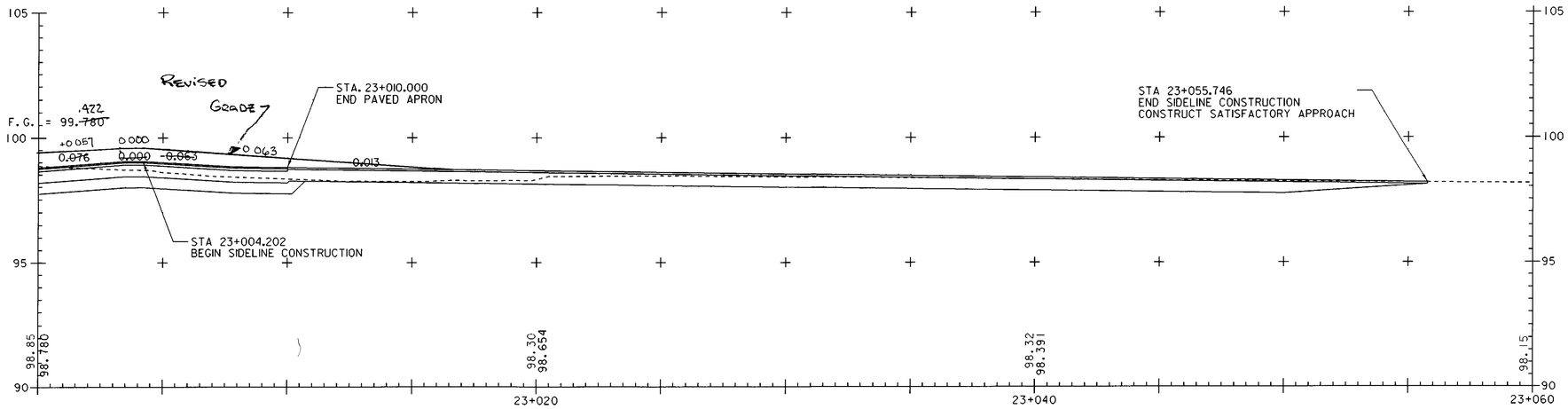

TH# 3 TH #25
6+628.570 = 23+000

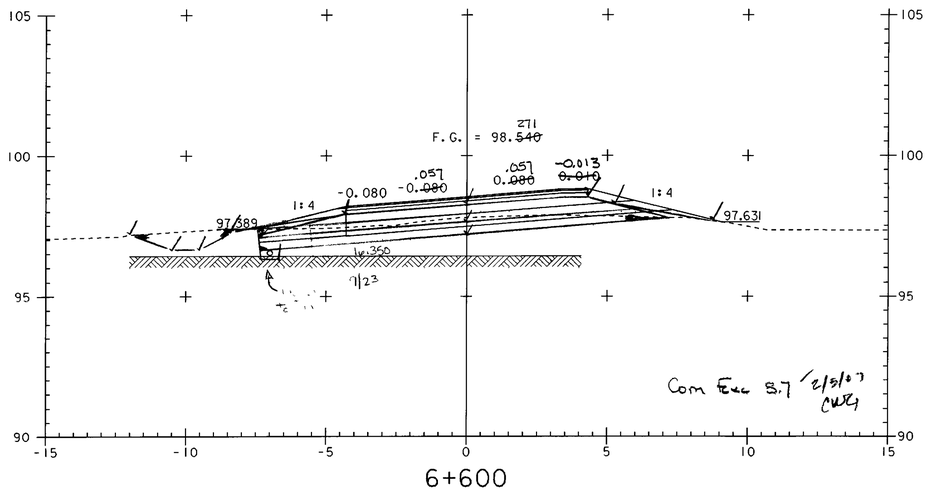

6+600

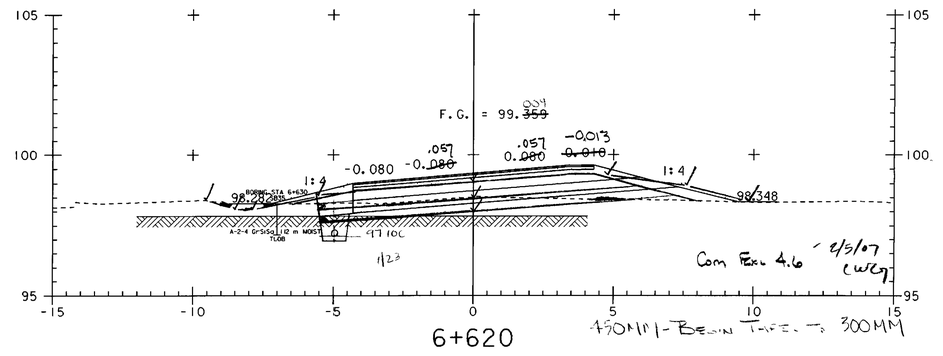

6+620

450MM I-BEAM TIES TO 300MM

0 2 4 6 8 10
SCALE IN METERS

PROJECT NAME:	HIGHGATE - FRANKLIN
PROJECT NUMBER:	STP RS 0301(1) SA
FILE NAME: ...85c060\design\dc060x08.dgn	PLOT DATE: 09-MAY-2005
PROJECT LEADER: DELLASANTA	DRAWN BY: SQUAD B
DESIGNED BY: SQUAD B	CHECKED BY: SQUAD B
IPARM FILE NAME: dc060x0817.1	SHEET 382 OF 450

TH #25 SECTIONS

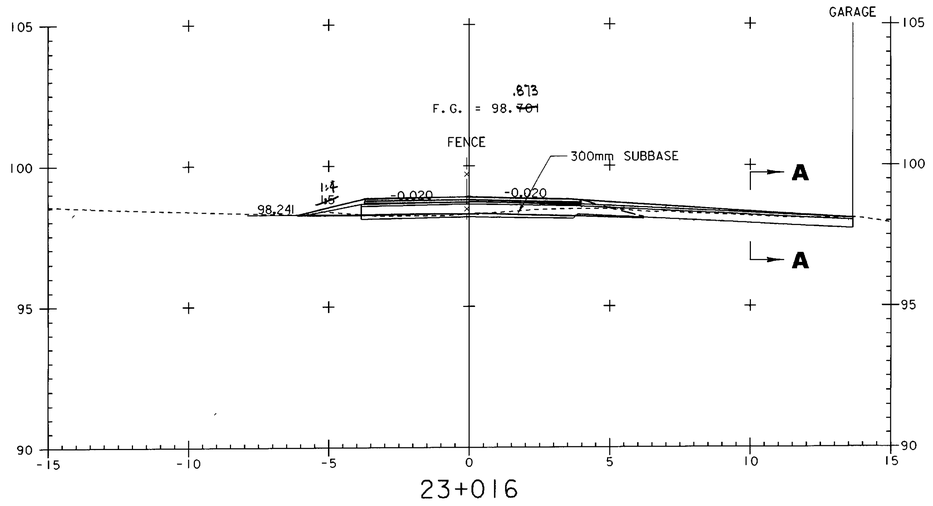

23+016

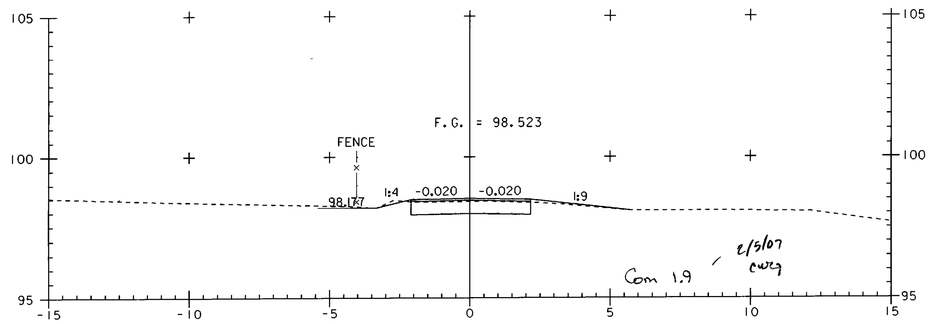

23+030

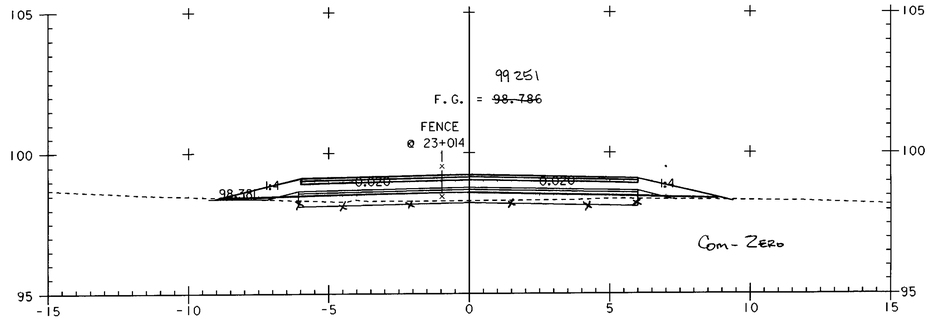

23+010

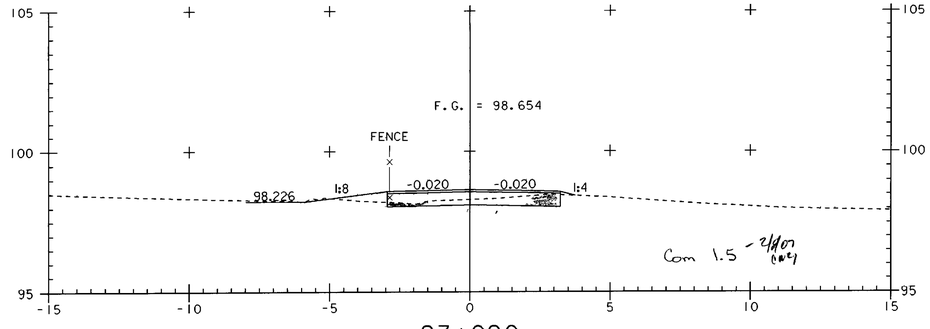

23+020

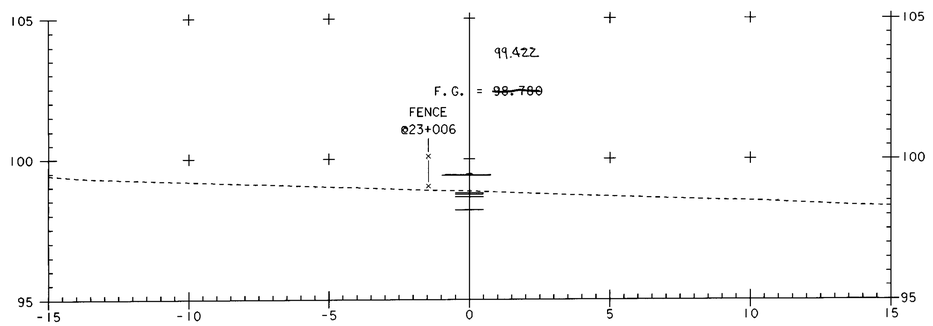

23+000

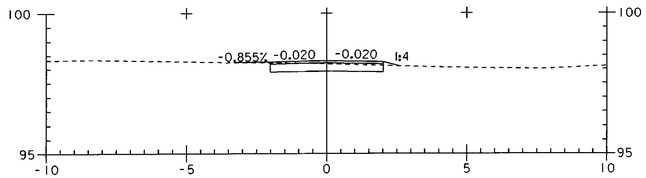

DRIVE AT 23+016 RT
SECTION A - A

0 2 4 6 8 10
SCALE IN METERS

PROJECT NAME:	HIGHGATE - FRANKLIN
PROJECT NUMBER:	STP RS 0301(1) SA
FILE NAME: ...85c060\design\dc060x08.dgn	PLOT DATE: 09-MAY-2005
PROJECT LEADER: DELLASANTA	DRAWN BY: SQUAD B
DESIGNED BY: SQUAD B	CHECKED BY: SQUAD B
IPARM FILE NAME: dc060x0818.i	SHEET 383 OF 450

TH #25 SECTIONS

Metric

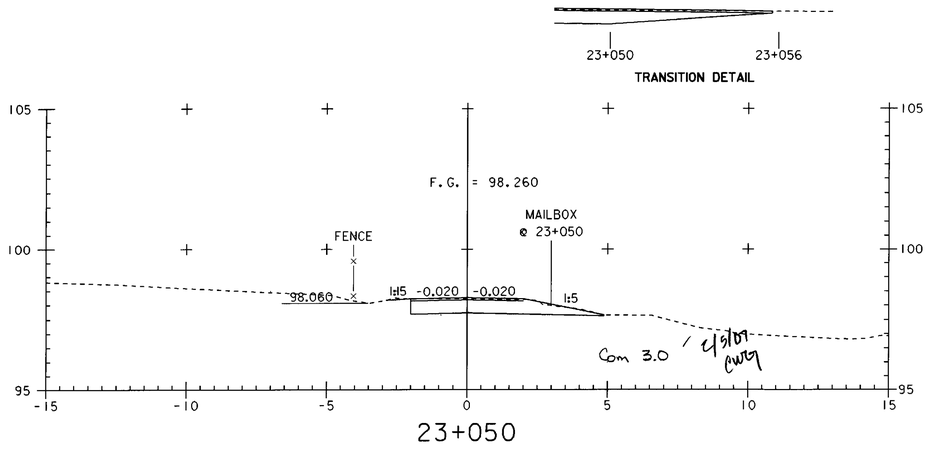

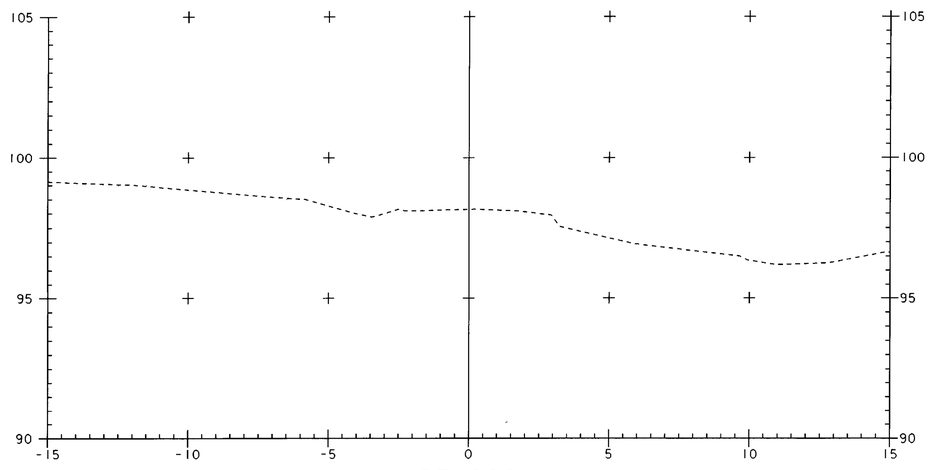

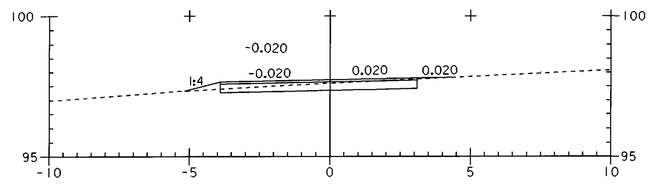

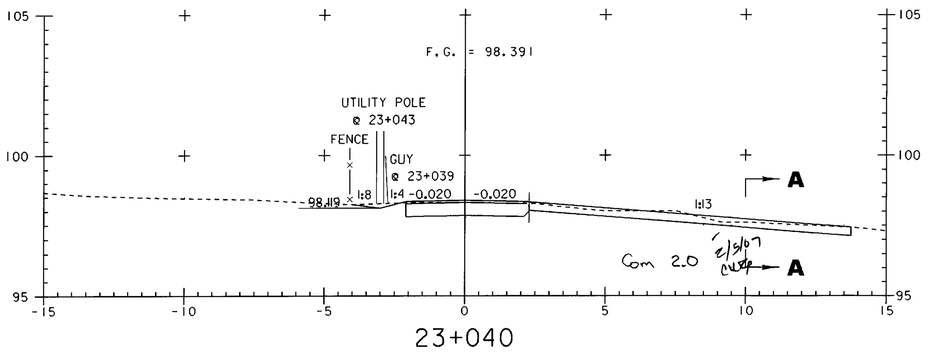

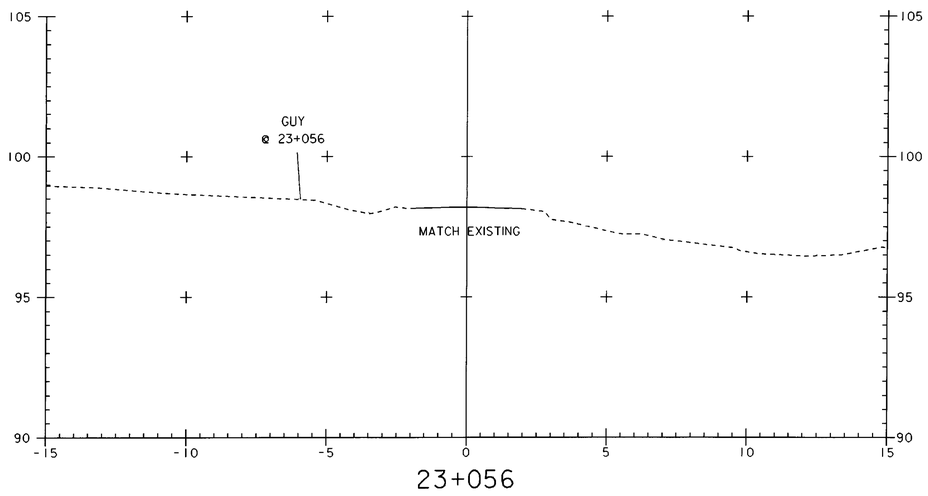

PROJECT NAME:	HIGHGATE - FRANKLIN
PROJECT NUMBER:	STP RS 0301(1) SA
FILE NAME: ...85c060\design\dc060x08.dgn	PLOT DATE: 09-MAY-2005
PROJECT LEADER: DELLASANTA	DRAWN BY: SQUAD B
DESIGNED BY: SQUAD B	CHECKED BY: SQUAD B
IPARM FILE NAME: dc060x0819.1	SHEET 384 OF 450

Metric

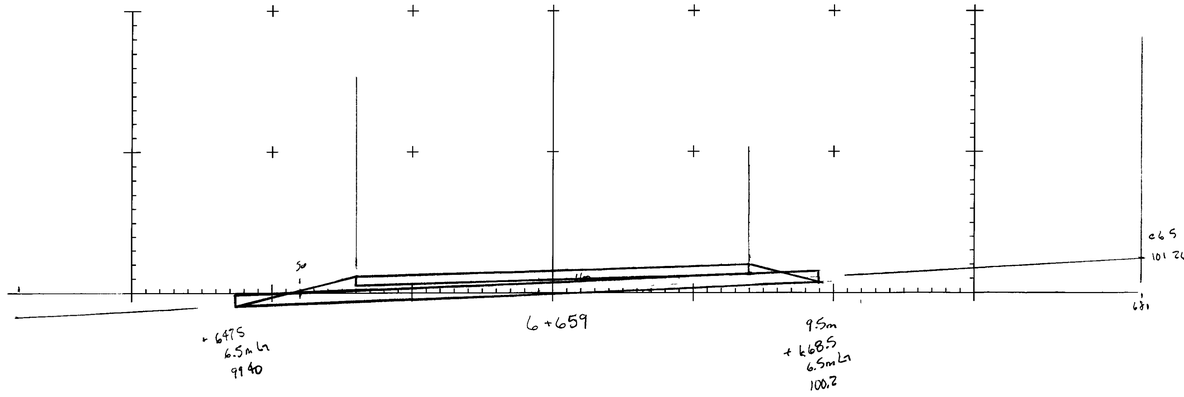

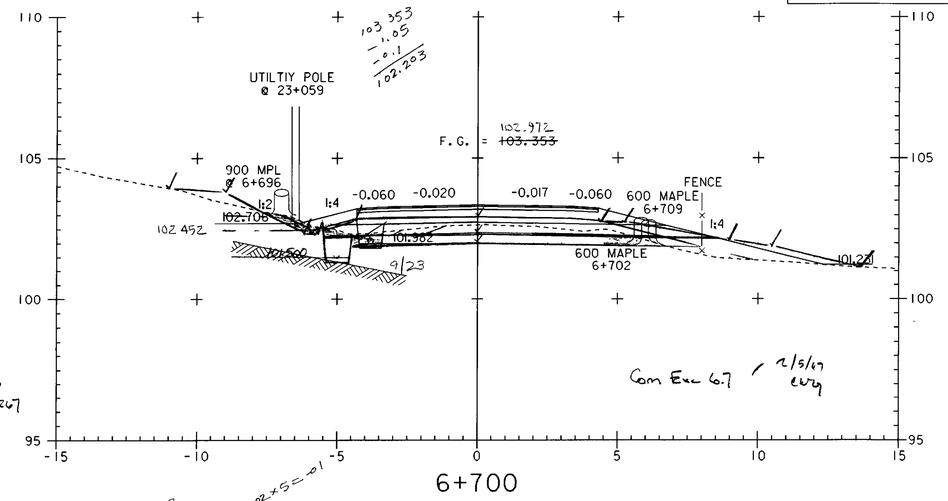

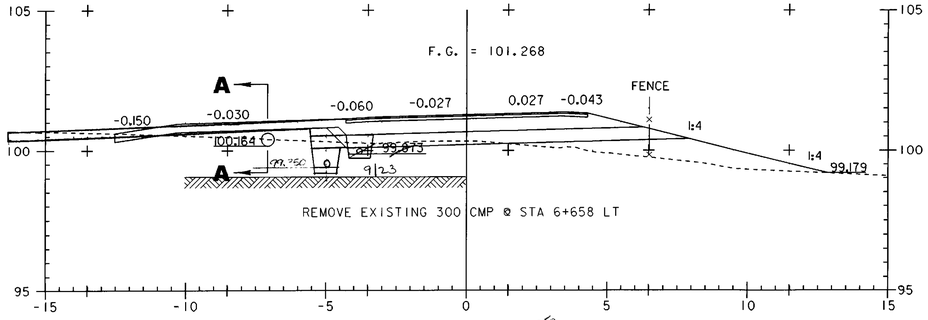

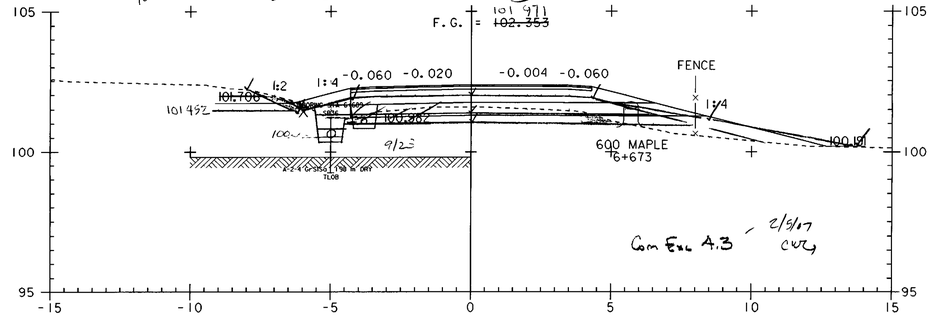

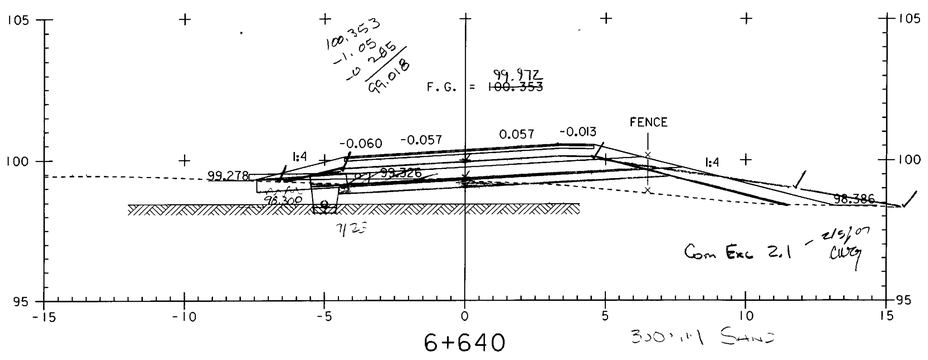

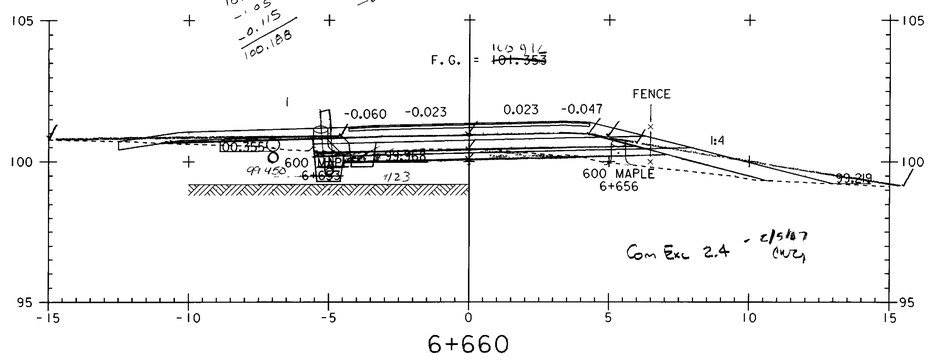

0 2 4 6 8 10
SCALE IN METERS

PROJECT NAME:	HIGHGATE - FRANKLIN
PROJECT NUMBER:	STP RS 0301(1) SA
FILE NAME: ...85c060\design\dc060x08.dgn	PLOT DATE: 09-MAY-2005
PROJECT LEADER: DELLASANTA	DRAWN BY: SQUAD B
DESIGNED BY: SQUAD B	CHECKED BY: SQUAD B
IPARM FILE NAME: dc060x0820.i	SHEET 385 OF 450

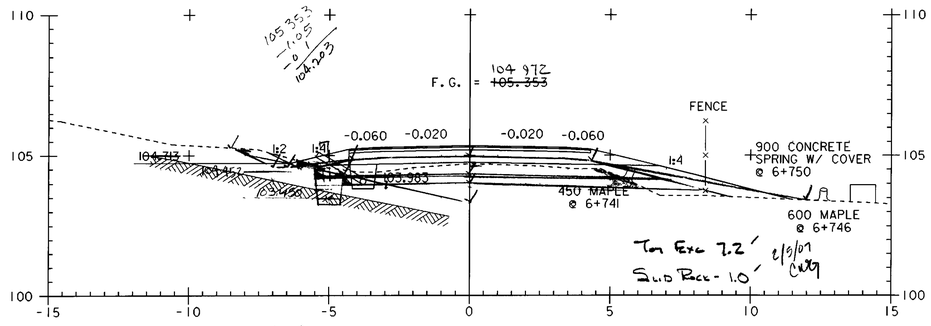

6+740

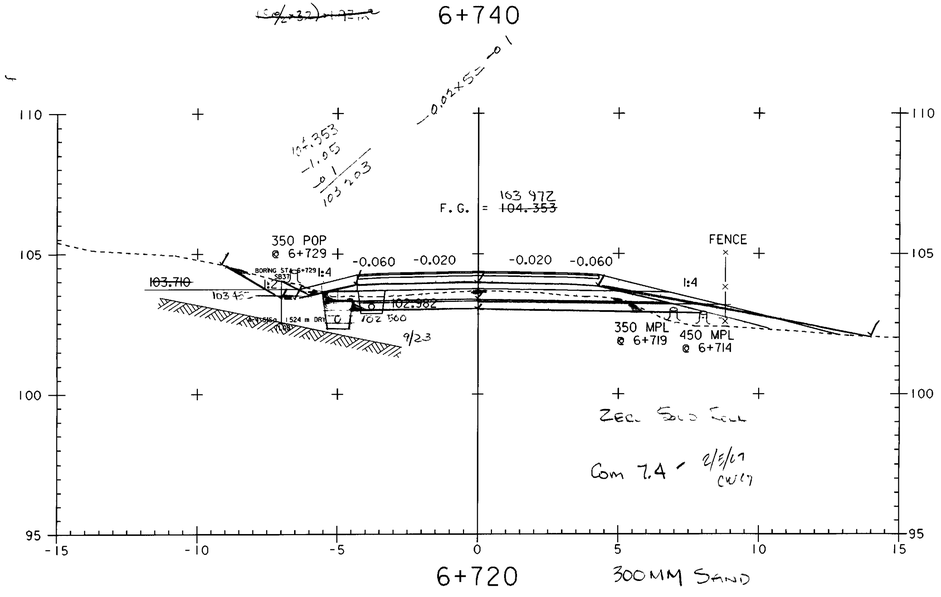

6+720 300MM SAND

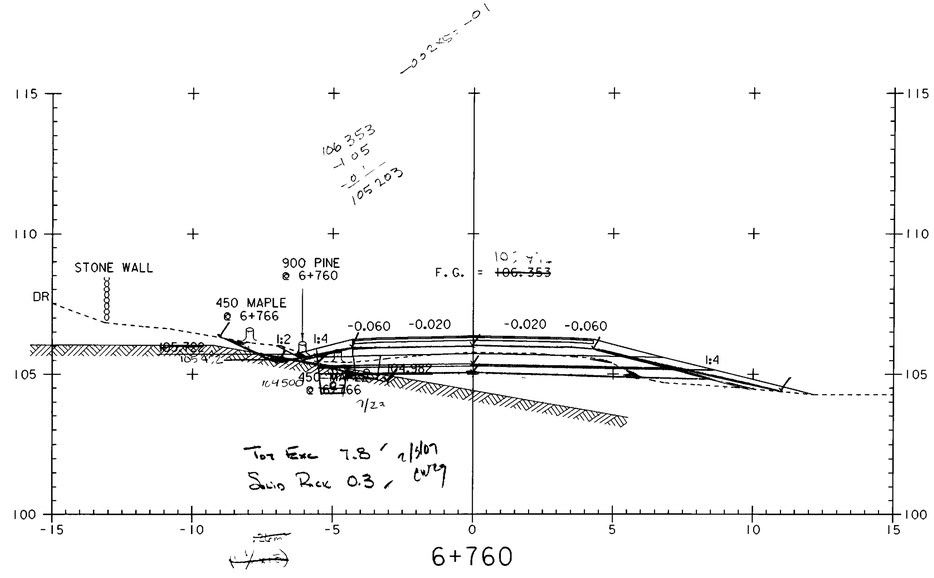

6+760

106.353
1.972
381

0 2 4 6 8 10
SCALE IN METERS

PROJECT NAME:	HIGHGATE - FRANKLIN
PROJECT NUMBER:	STP RS 0301(1) SA
FILE NAME: ...85c060\design\dc060x09.dgn	PLOT DATE: 09-MAY-2005
PROJECT LEADER: DELLASANTA	DRAWN BY: SQUAD B
DESIGNED BY: SQUAD B	CHECKED BY: SQUAD B
IPARM FILE NAME: dc060x09l.i	SHEET 386 OF 450

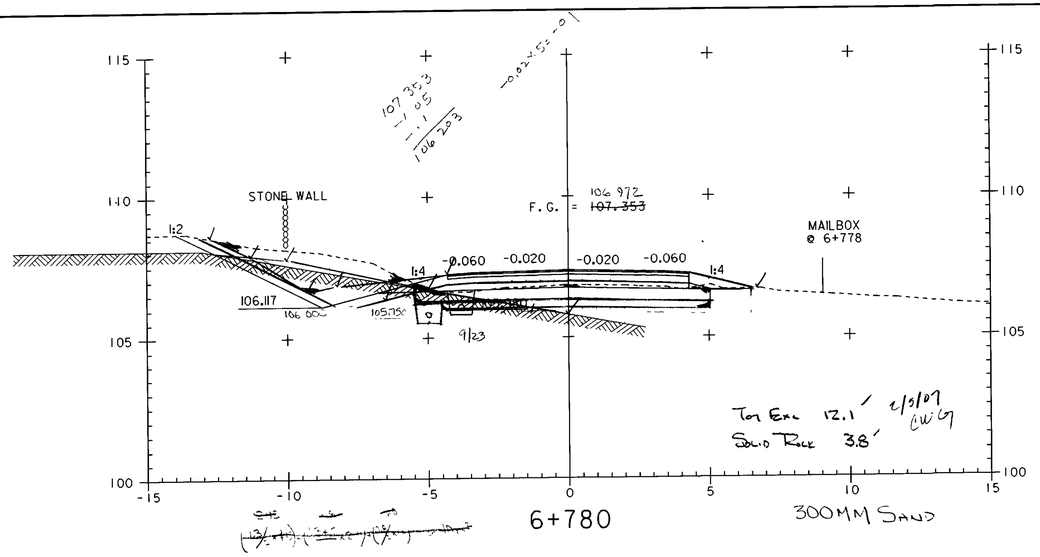

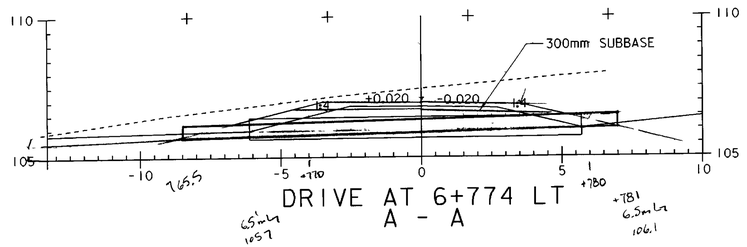

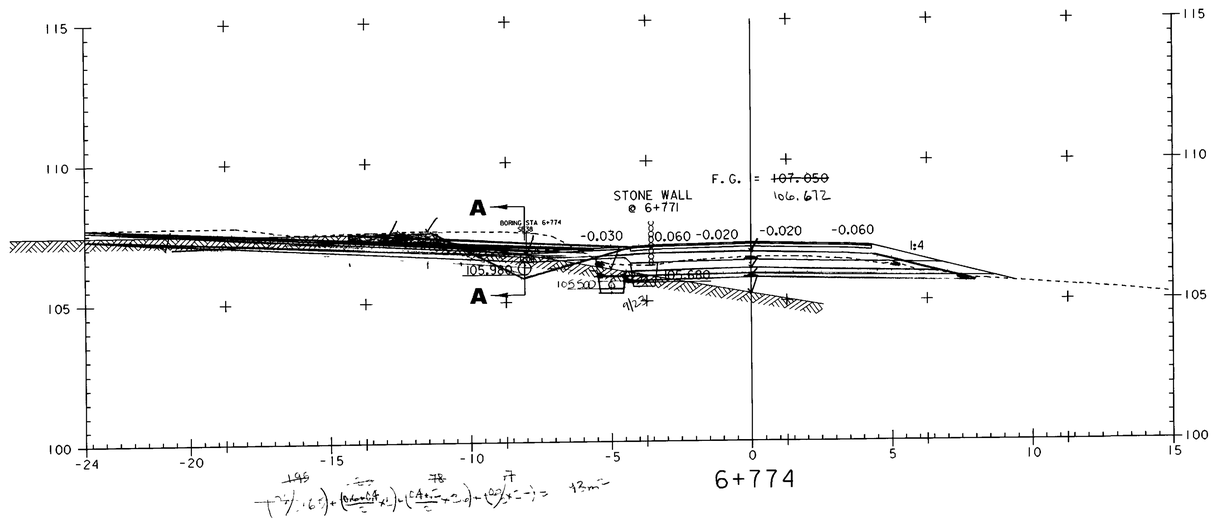

0 2 4 6 8 10
SCALE IN METERS

PROJECT NAME:	HIGHGATE - FRANKLIN
PROJECT NUMBER:	STP RS 0301(I) SA
FILE NAME: ...85c060\design\dc060x09.dgn	PLOT DATE: 09-MAY-2005
PROJECT LEADER: DELLASANTA	DRAWN BY: SQUAD B
DESIGNED BY: SQUAD B	CHECKED BY: SQUAD B
IPARM FILE NAME: dc060x092.i	SHEET 387 OF 450

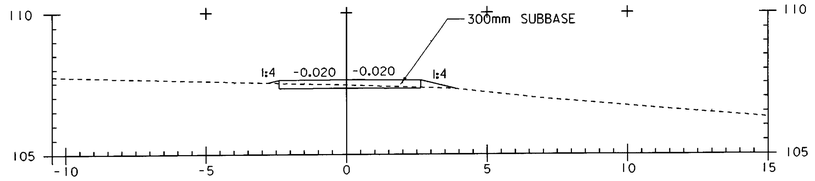

DRIVE AT 6+790 RT
A - A

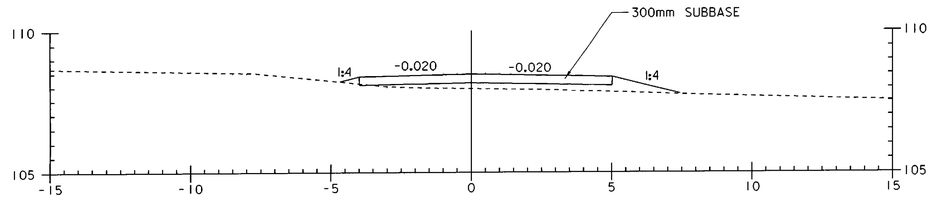

DRIVE AT 6+810 RT
A - A

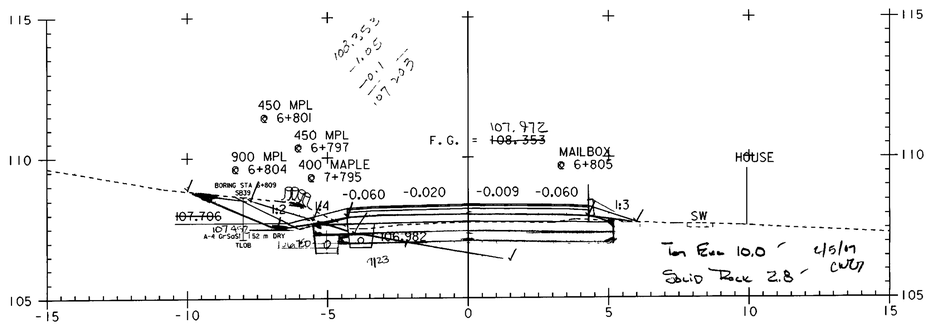

6+800

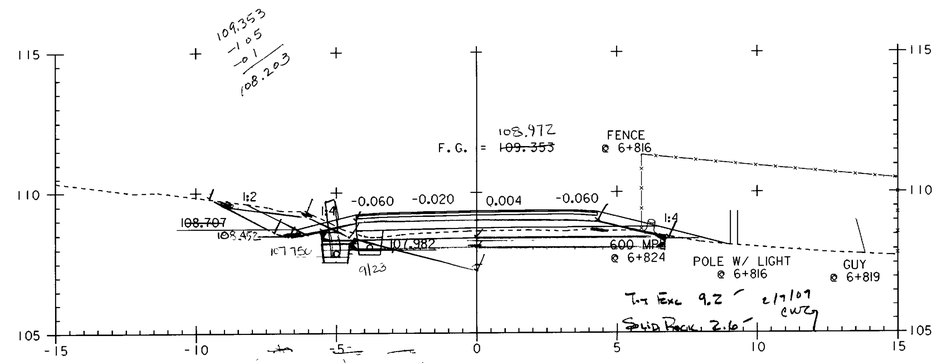

6+820

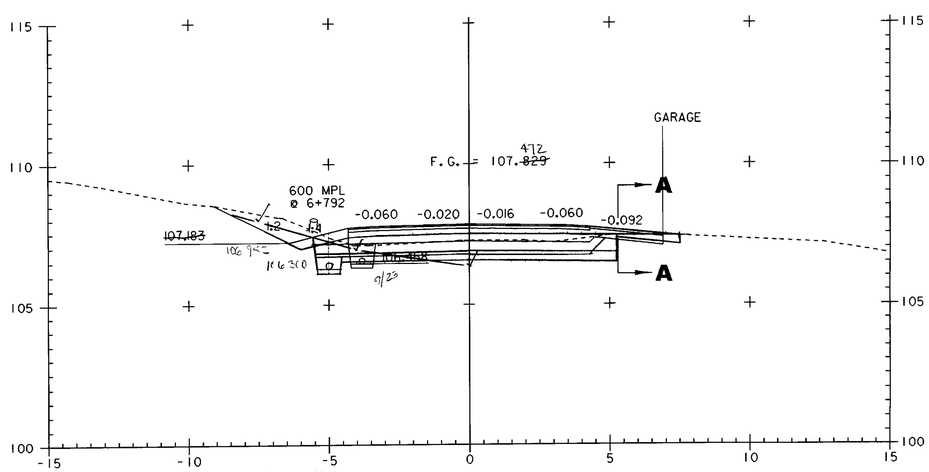

6+790

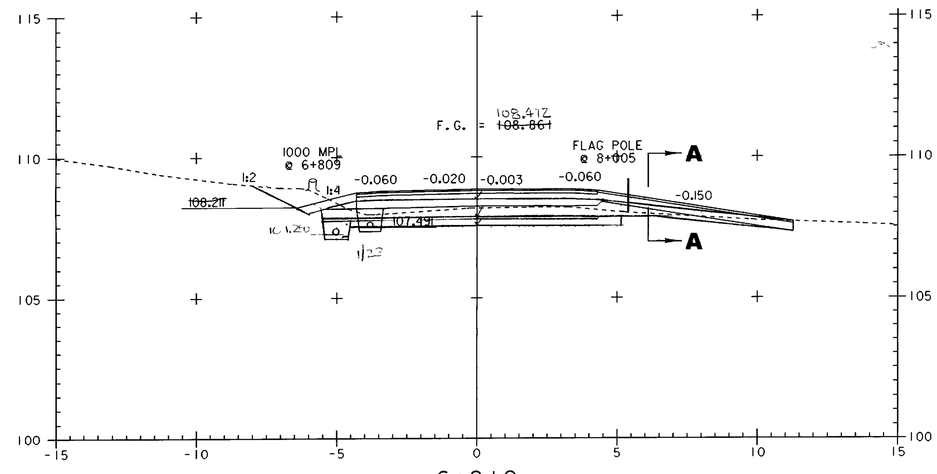

6+810

0 2 4 6 8 10
SCALE IN METERS

PROJECT NAME: HIGHGATE - FRANKLIN	
PROJECT NUMBER: STP RS 0301(1) SA	
FILE NAME: ...85c060\design\dc060x09.dgn	PLOT DATE: 09-MAY-2005
PROJECT LEADER: DELLASANTA	DRAWN BY: SQUAD B
DESIGNED BY: SQUAD B	CHECKED BY: SQUAD B
IPARM FILE NAME: dc060x093.i	SHEET 388 OF 450

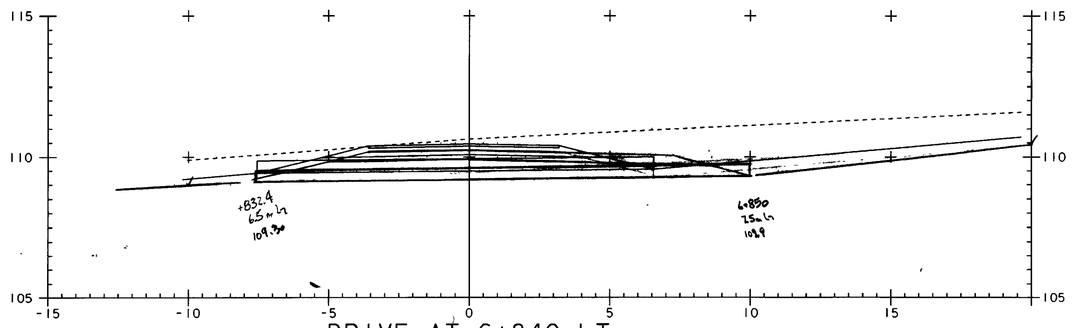

DRIVE AT 6+840 LT
A - A

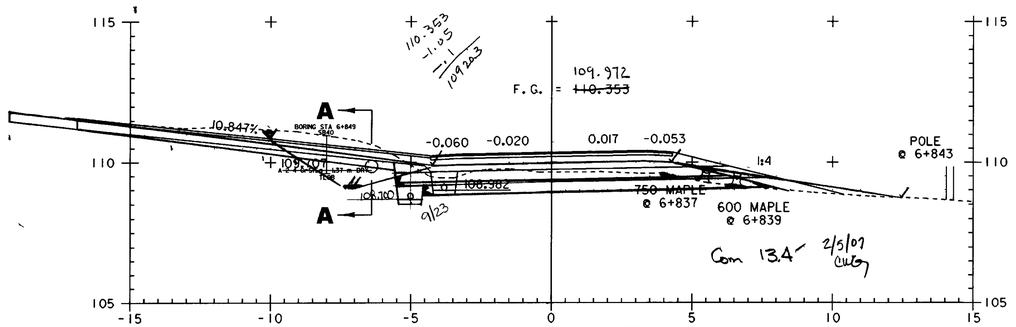

6+840 Temp Stopped Zero Solid Rock

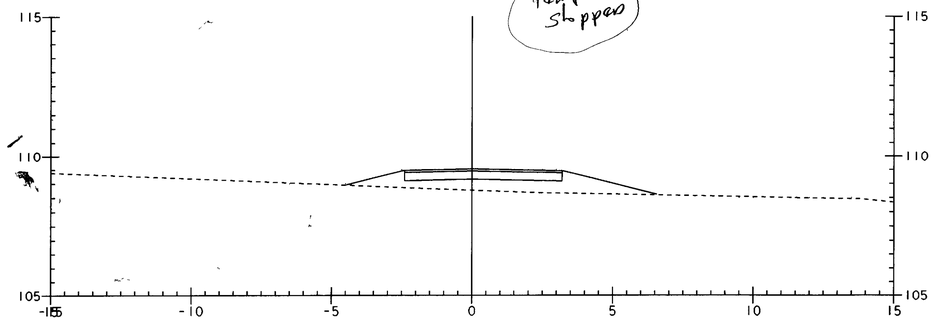

DRIVE AT 6+830 RT
A-A

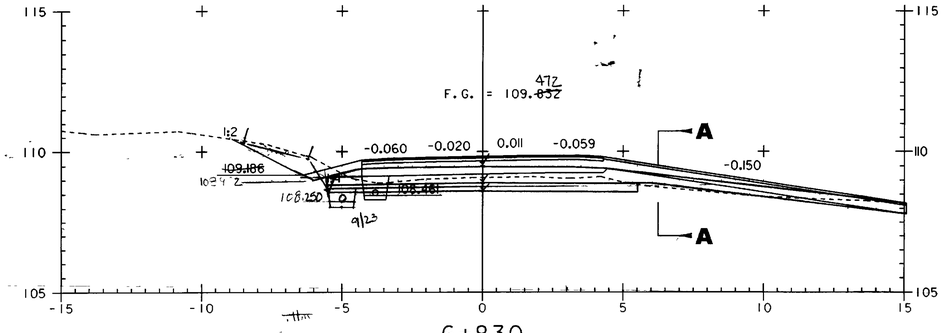

6+830

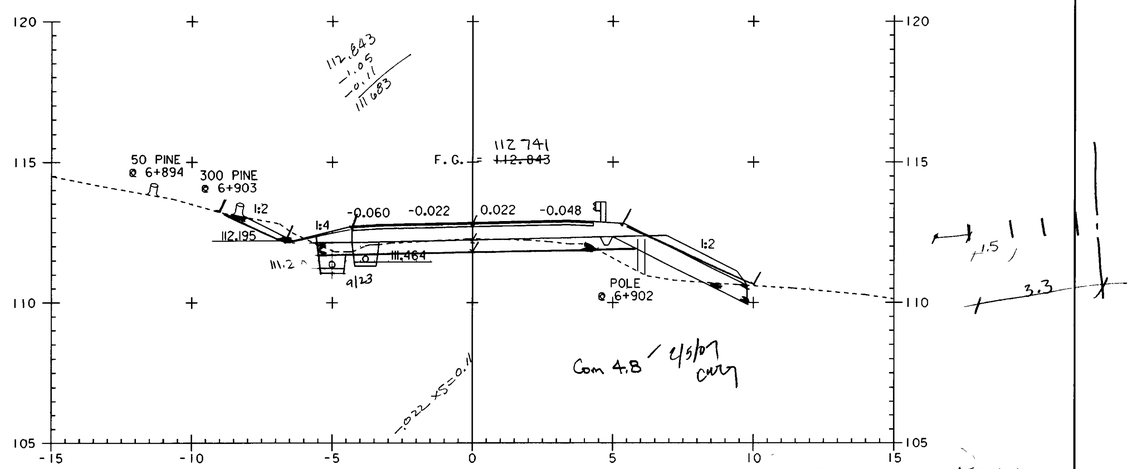

6+900 End 300MM Sand Transition To 450MM

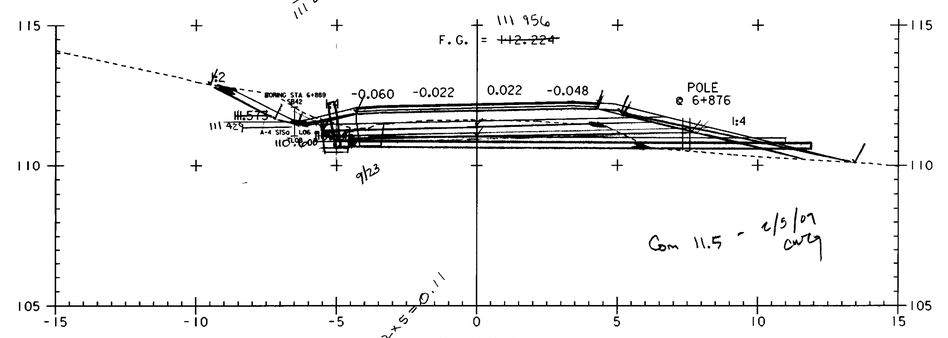

6+880

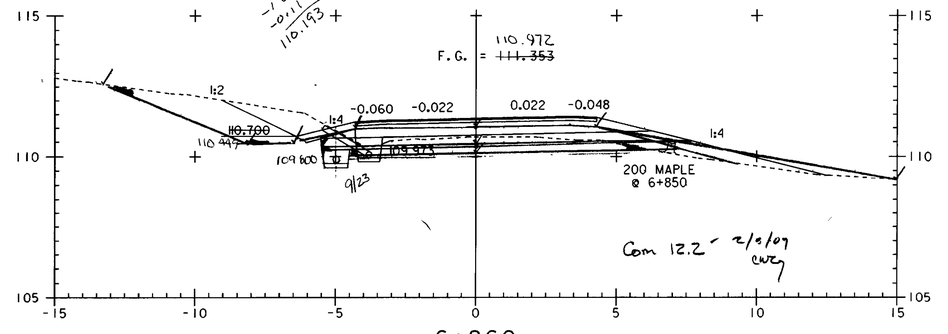

6+860

0 2 4 6 8 10
SCALE IN METERS

PROJECT NAME:	HIGHGATE - FRANKLIN
PROJECT NUMBER:	STP RS 0301(1) SA
FILE NAME: ...85c060\design\dc060x09.dgn	PLOT DATE: 09-MAY-2005
PROJECT LEADER: DELLASANTA	DRAWN BY: SQUAD B
DESIGNED BY: SQUAD B	CHECKED BY: SQUAD B
IPARM FILE NAME: dc060x094.i	SHEET 389 OF 450

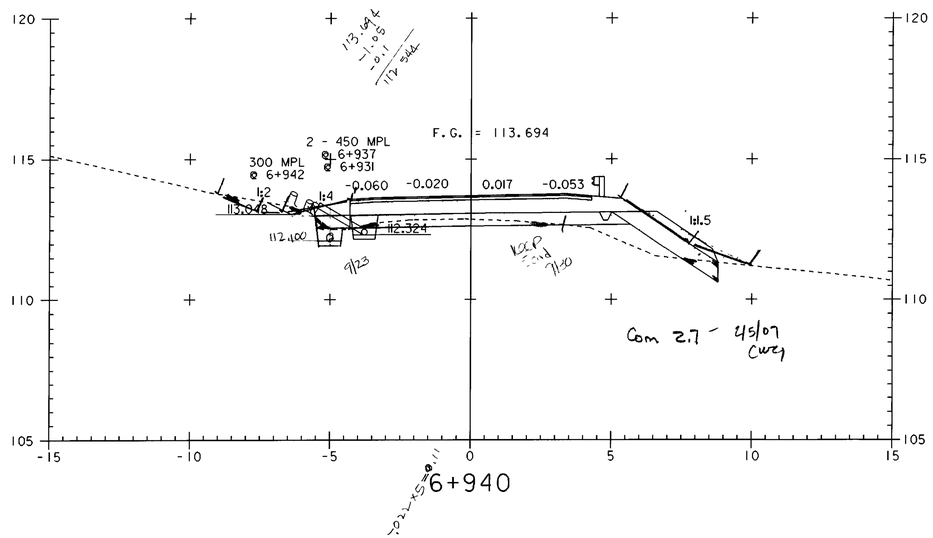

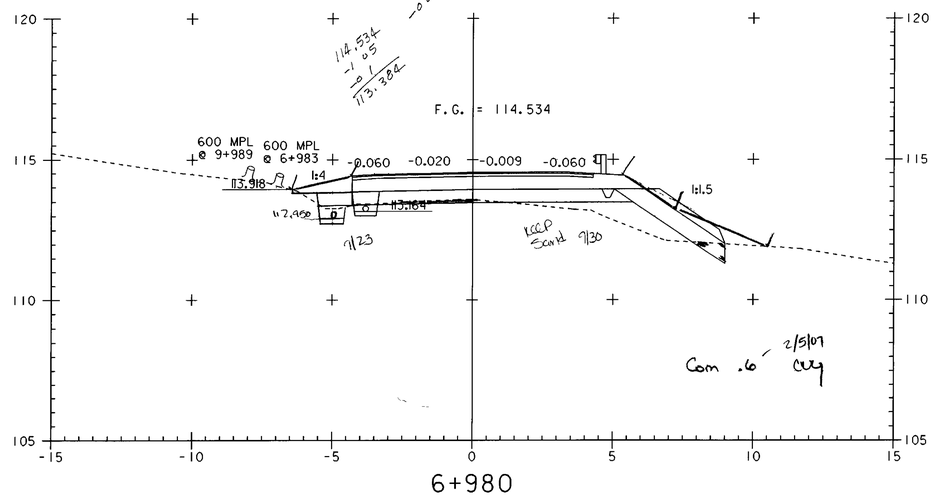

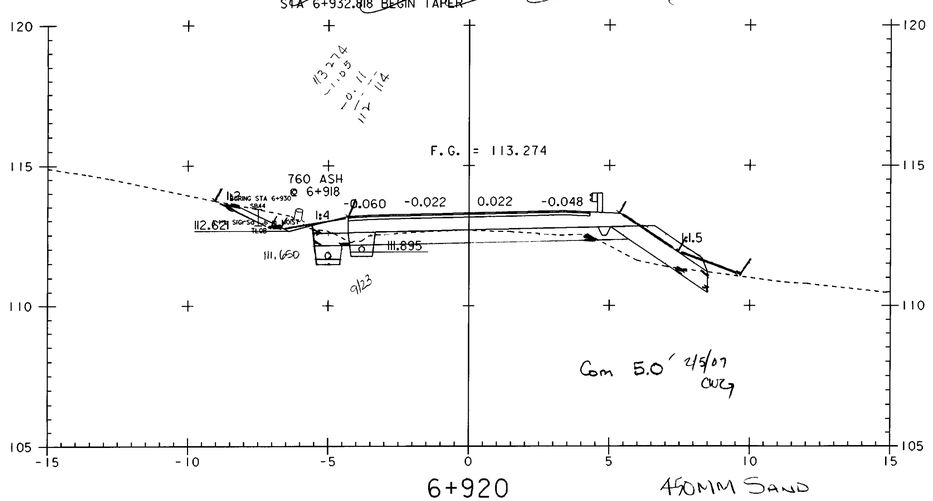

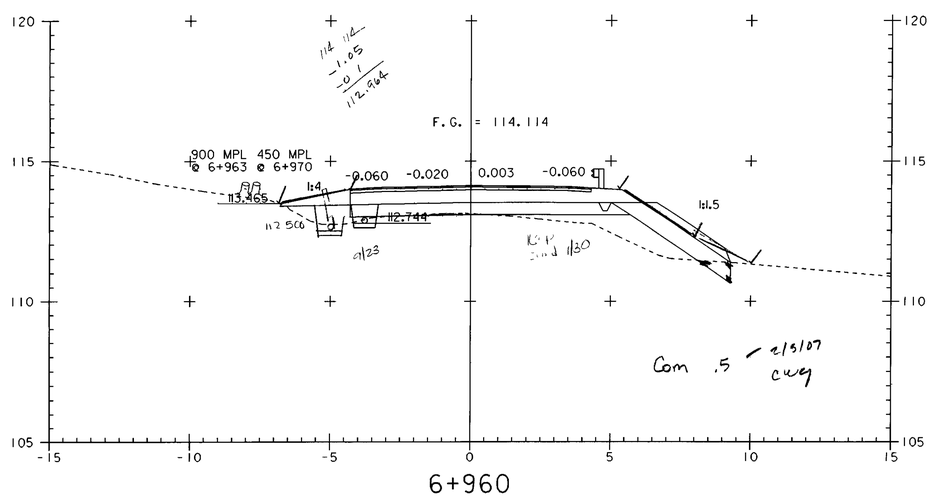

0 2 4 6 8 10
SCALE IN METERS

PROJECT NAME:	HIGHGATE - FRANKLIN
PROJECT NUMBER:	STP RS 0301(1) SA
FILE NAME: ...85c060\design\dc060x09.dgn	PLOT DATE: 09-MAY-2005
PROJECT LEADER: DELLASANTA	DRAWN BY: SQUAD B
DESIGNED BY: SQUAD B	CHECKED BY: SQUAD B
IPARM FILE NAME: dc060x095.i	SHEET 390 OF 450

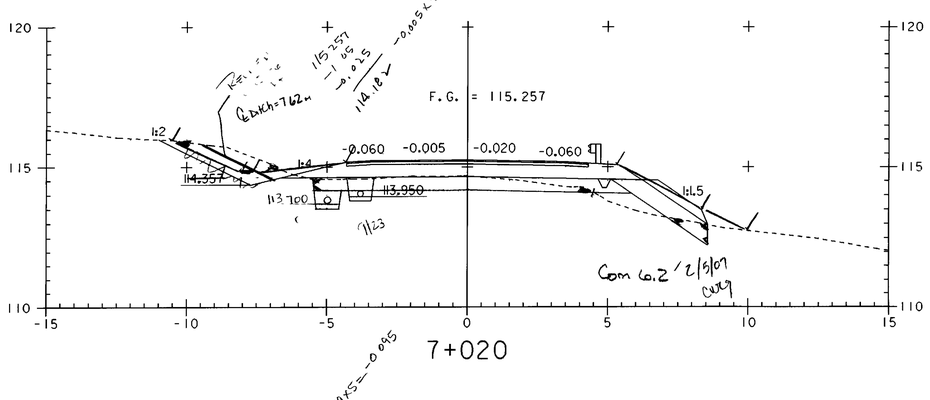

STA 6+998.188 END FULL DEPTH SAND (450MM) BEGIN TAPER

0 2 4 6 8 10
SCALE IN METERS

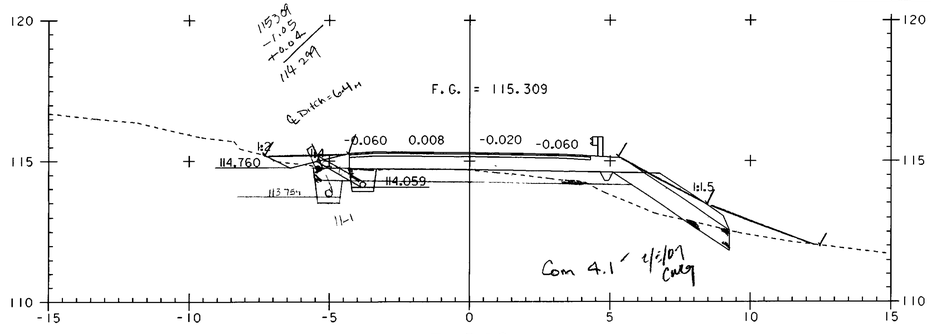

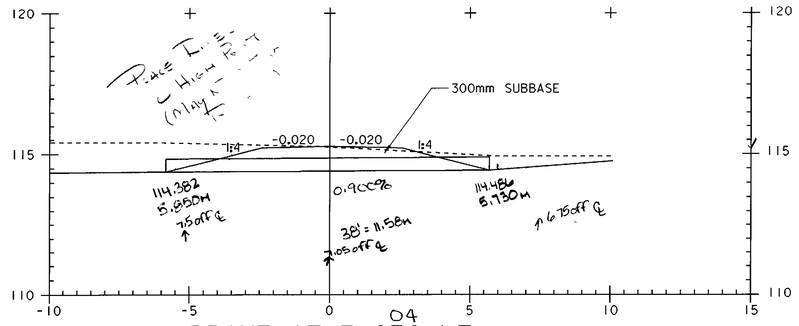

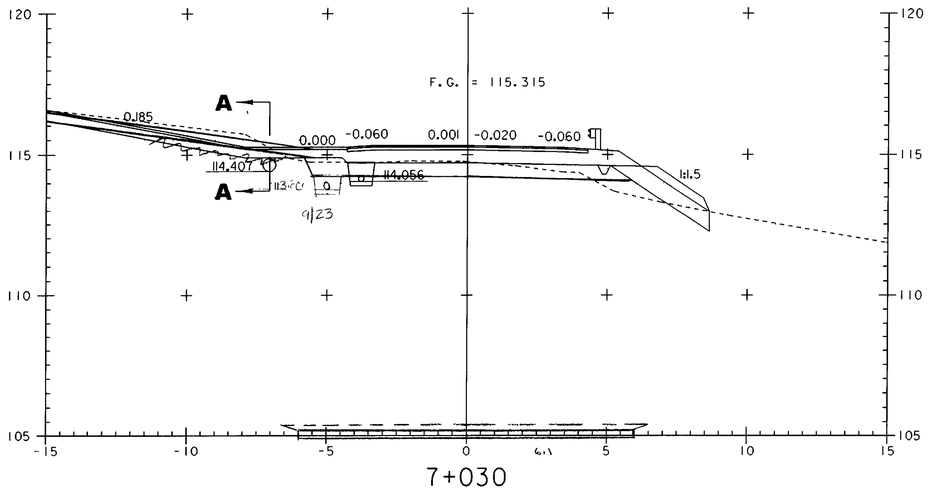

PROJECT NAME:	HIGHGATE - FRANKLIN
PROJECT NUMBER:	STP RS 0301(I) SA
FILE NAME: ...85c060\design\dc060x09.dgn	PLOT DATE: 09-MAY-2005
PROJECT LEADER: DELLASANTA	DRAWN BY: SQUAD B
DESIGNED BY: SQUAD B	CHECKED BY: SQUAD B
IPARM FILE NAME: dc060x096.i	SHEET 391 OF 450

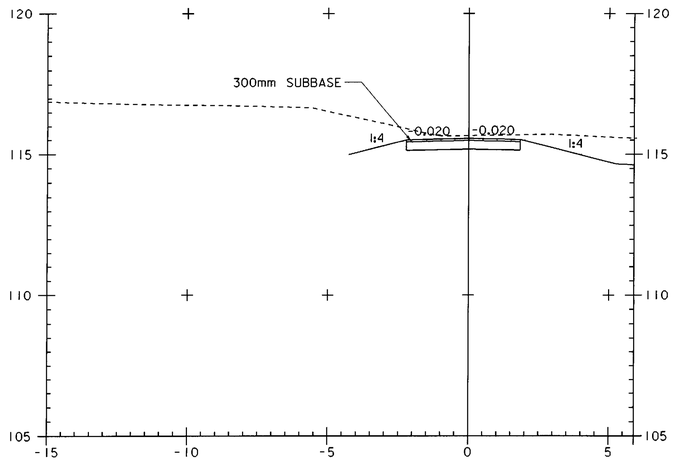

DRIVE AT 7+053 LT
A-A

115.164
-1.105
+0.105
114.219

+0.021 x 5 = +0.105

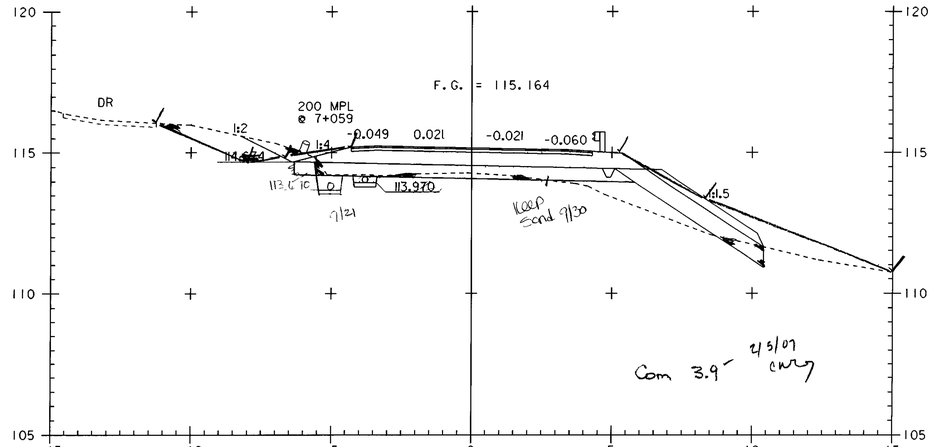

7+060

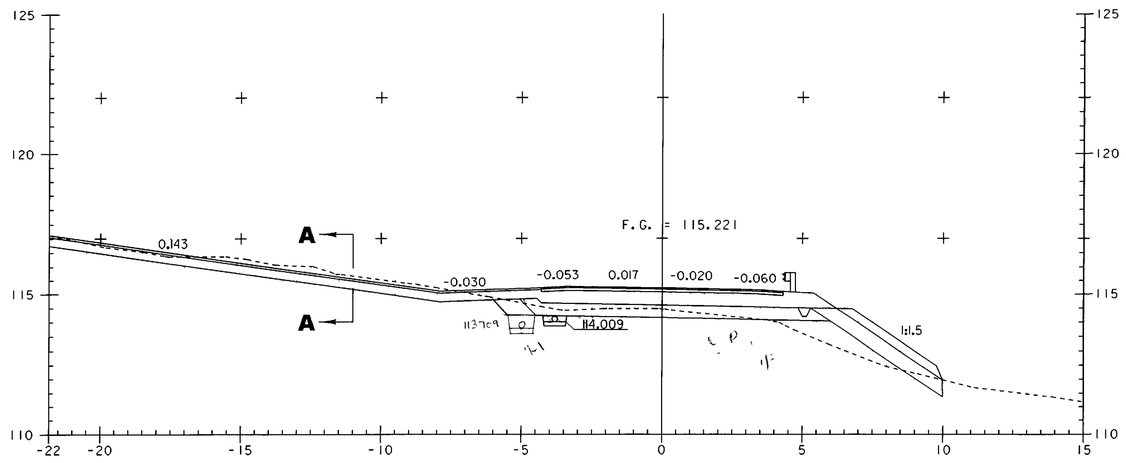

7+053

STA 7+022.440 END TAPER BEGIN FULL DEPTH SAND (450MM)
STA 7+050.580 BEGIN TAPER

0 2 4 6 8 10
SCALE IN METERS

PROJECT NAME:	HIGHGATE - FRANKLIN
PROJECT NUMBER:	STP RS 0301(I) SA
FILE NAME: ...85c060\design\dc060x09.dgn	PLOT DATE: 09-MAY-2005
PROJECT LEADER: DELLASANTA	DRAWN BY: SQUAD B
DESIGNED BY: SQUAD B	CHECKED BY: SQUAD B
IPARM FILE NAME: dc060x097.i	SHEET 392 OF 450

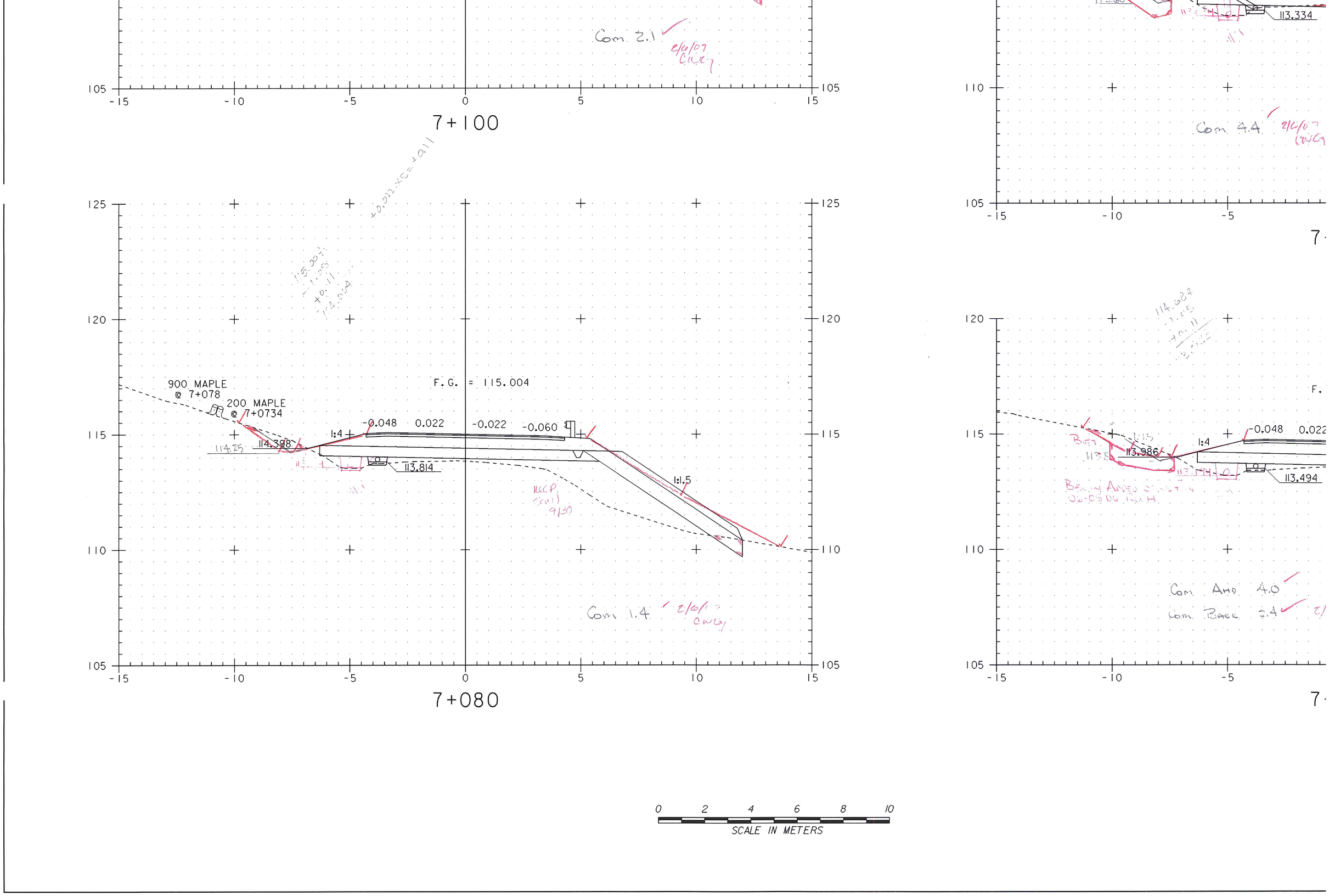

Com 2.1
7+100
Com 4.4
113.334
900 MAPLE
@ 7+078
200 MAPLE
@ 7+0734
F.G. = 115.004
-0.048
0.022
-0.022
-0.060
1:4
1:1.5
114.398
113.814
114.25
Com 1.4
7+080
113.986
113.494
Com Ahd 4.0
Com Back 3.4
0 2 4 6 8 10
SCALE IN METERS

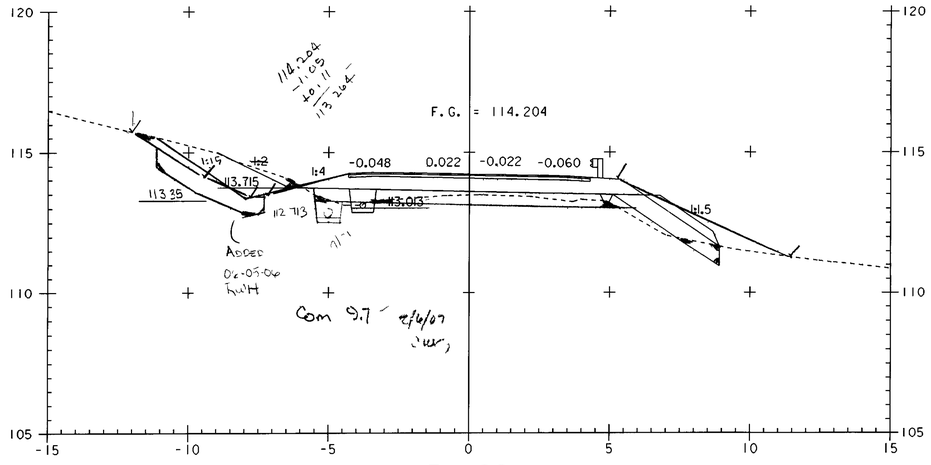

7+180

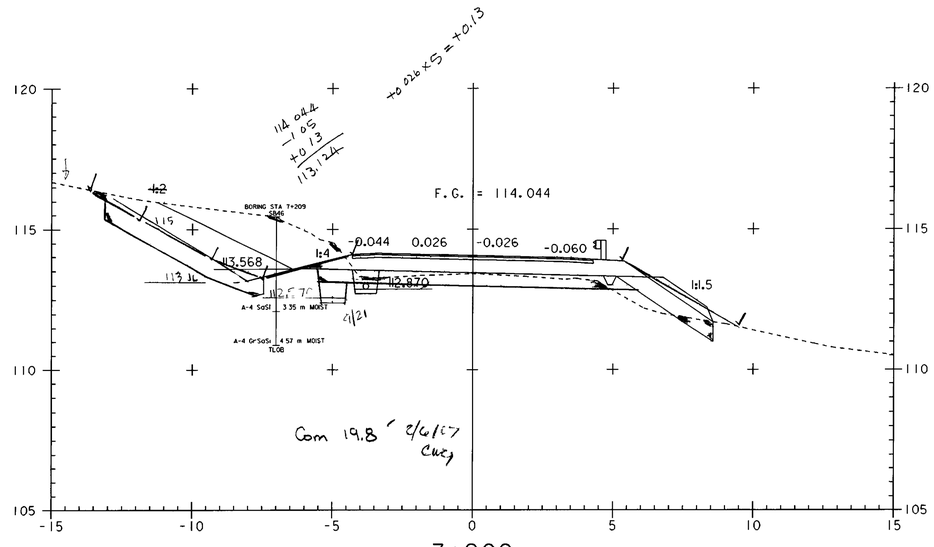

7+200

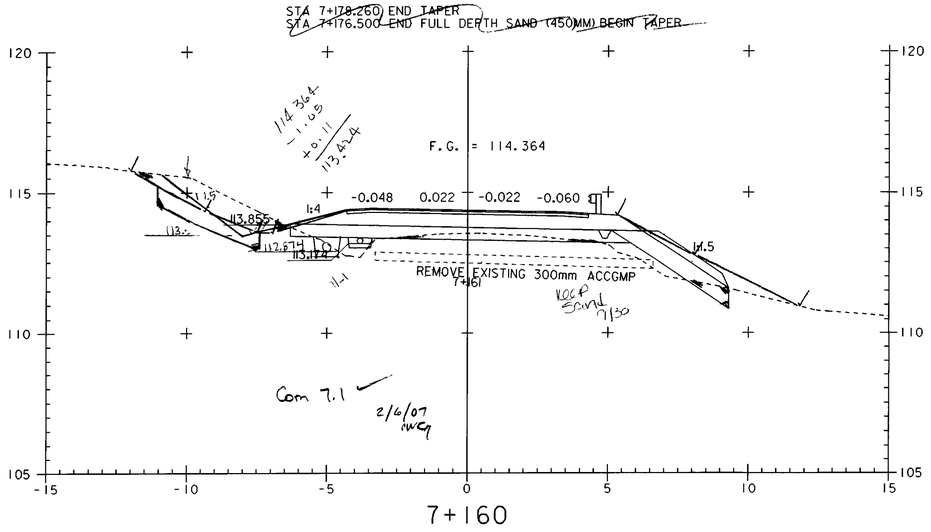

7+160

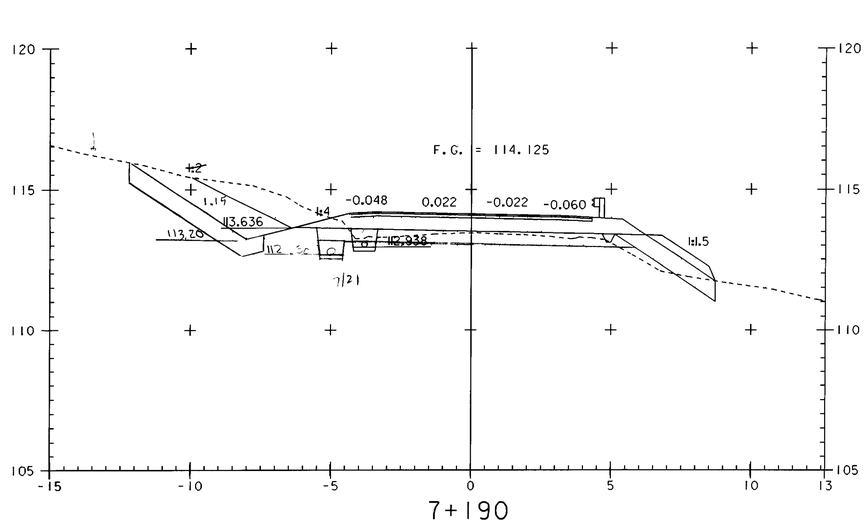

7+190

0 2 4 6 8 10
SCALE IN METERS

PROJECT NAME:	HIGHGATE - FRANKLIN
PROJECT NUMBER:	STP RS 0301(I) SA
FILE NAME: ...85c060\design\dc060x09.dgn	PLOT DATE: 09-MAY-2005
PROJECT LEADER: DELLASANTA	DRAWN BY: SQUAD B
DESIGNED BY: SQUAD B	CHECKED BY: SQUAD B
IPARM FILE NAME: dc060x099.i	SHEET 394 OF 450

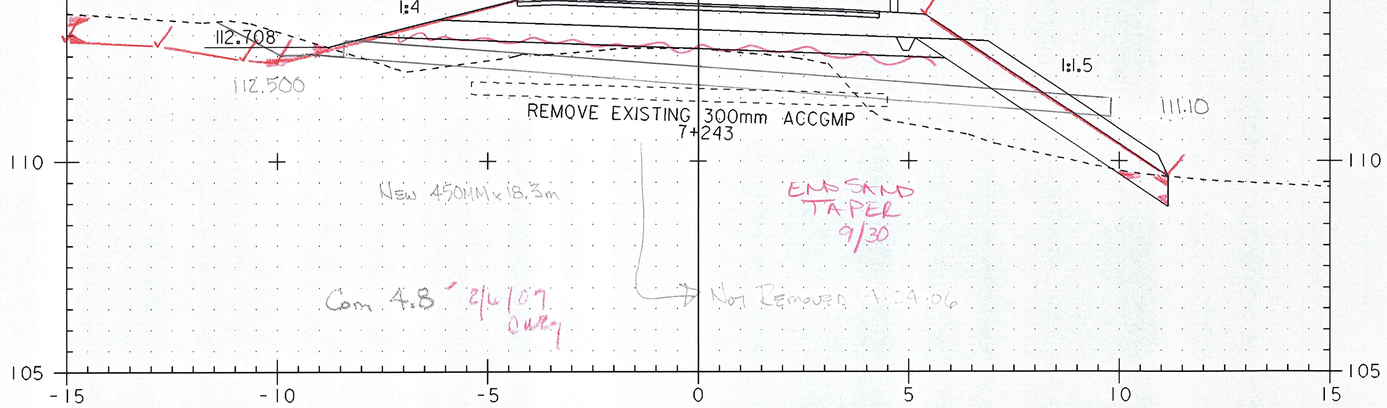

7+240

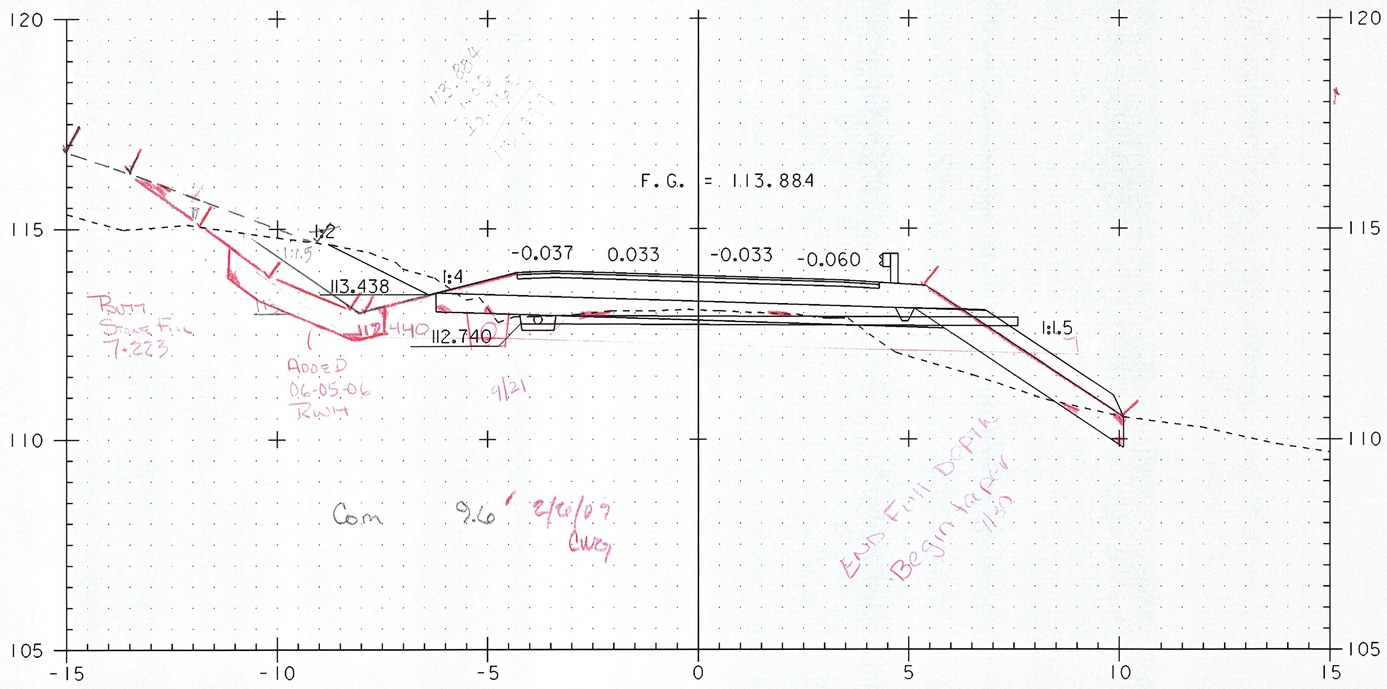

7+220

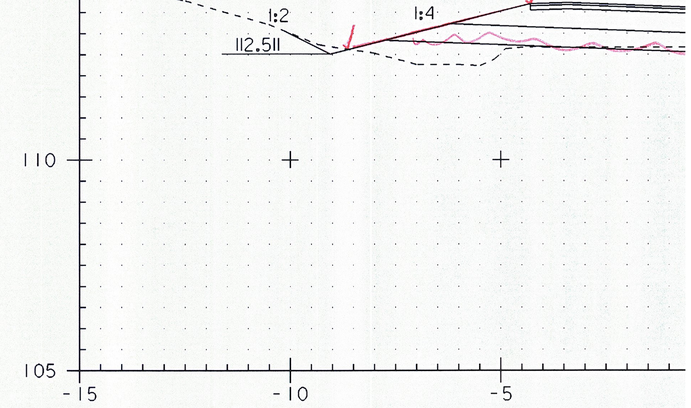

7-

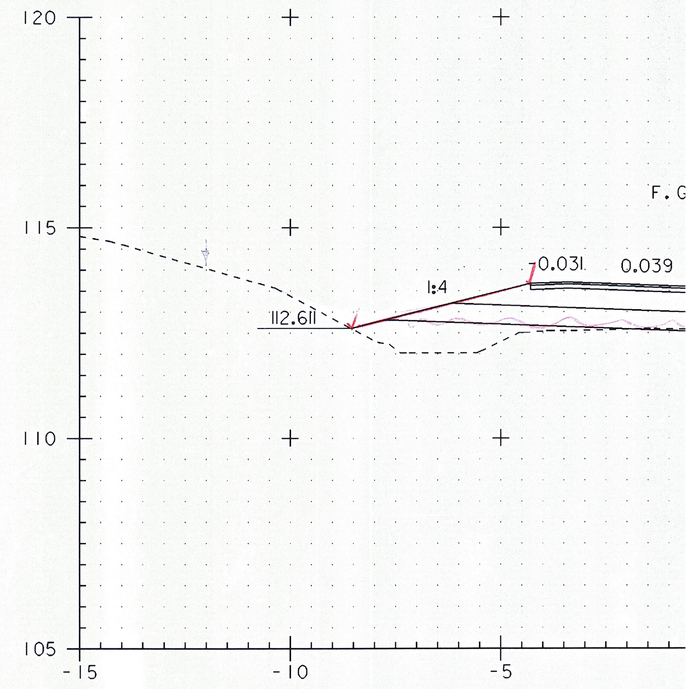

7+

STA 7+216.160 END TAPER BEGIN FULL DEPTH SAND (450MM)
STA 7+214.300 BEGIN TAPER

0 2 4 6 8 10
SCALE IN METERS

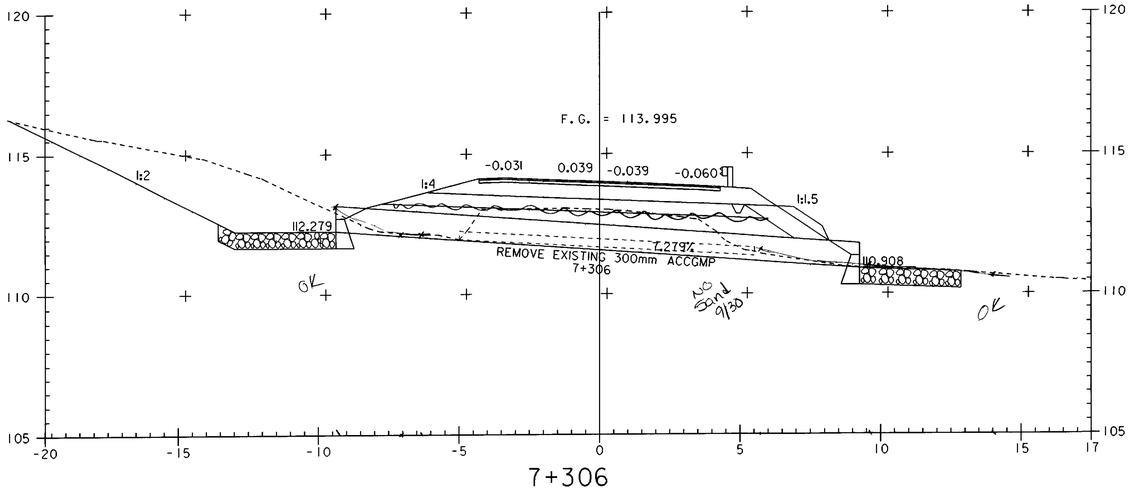

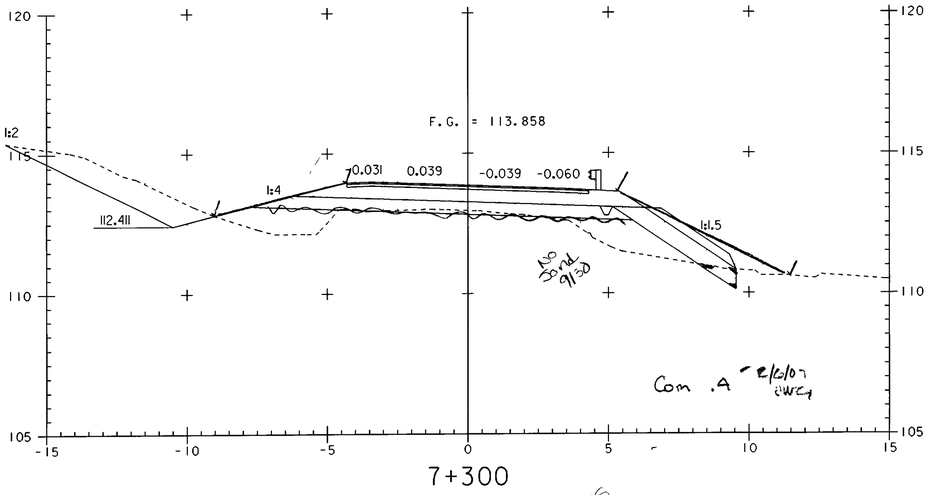

0 2 4 6 8 10
SCALE IN METERS

PROJECT NAME:	HIGHGATE - FRANKLIN
PROJECT NUMBER:	STP RS 0301(1) SA
FILE NAME: ...85c060\design\dc060x09.dgn	PLOT DATE: 09-MAY-2005
PROJECT LEADER: DELLASANTA	DRAWN BY: SQUAD B
DESIGNED BY: SQUAD B	CHECKED BY: SQUAD B
IPARM FILE NAME: dc060x0911.i	SHEET 396 OF 450

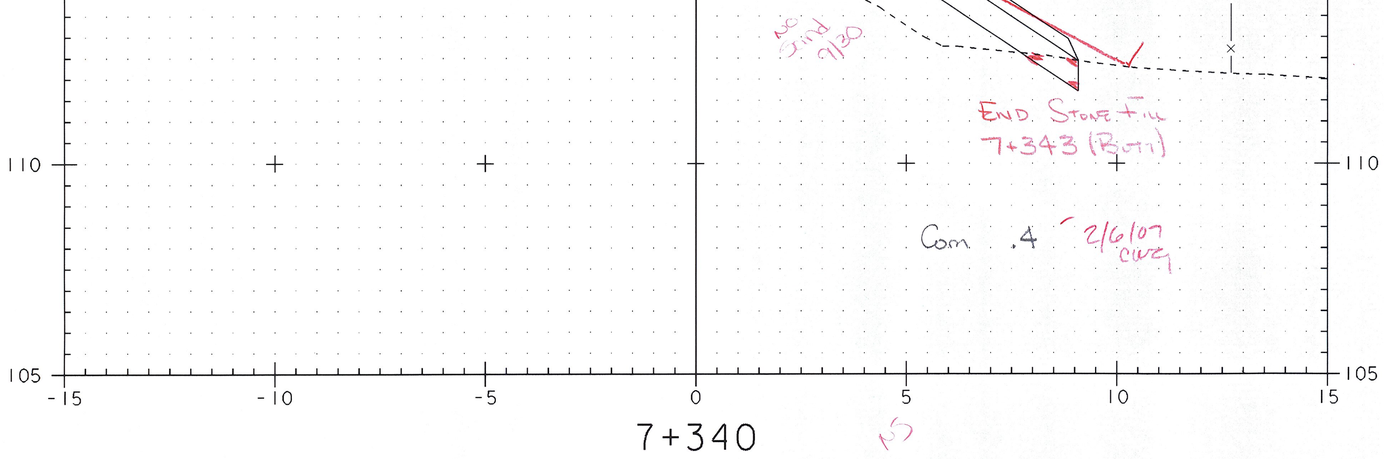

7+340

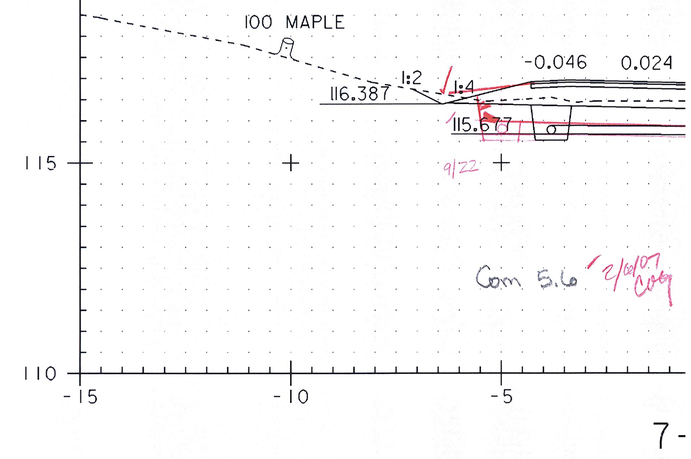

7-

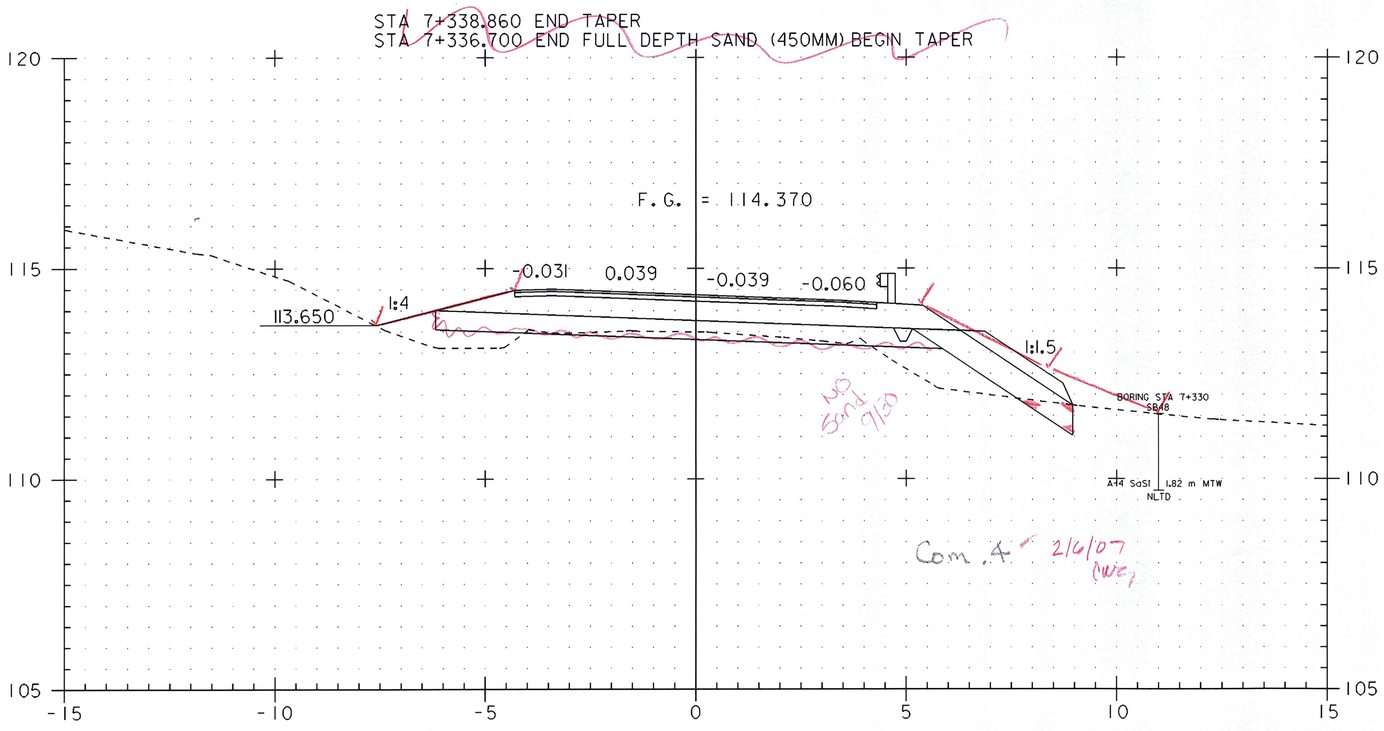

7+320

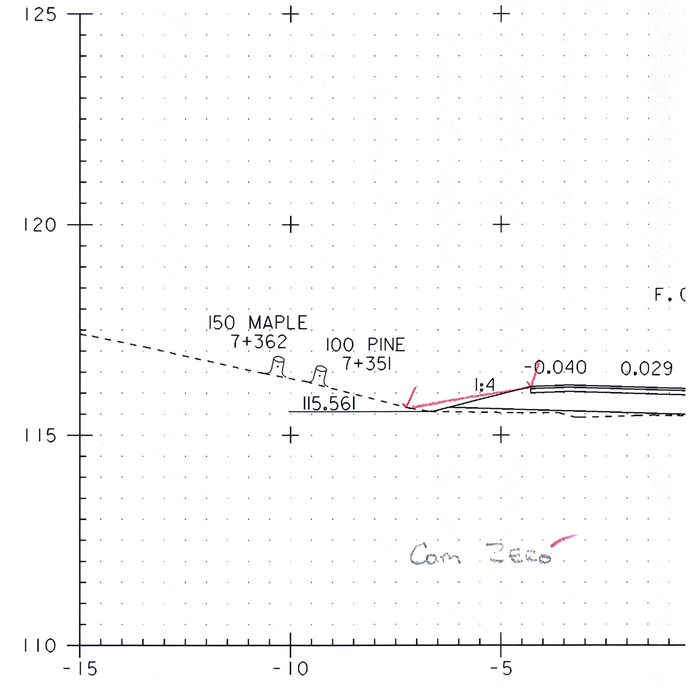

7-

0 2 4 6 8 10

SCALE IN METERS

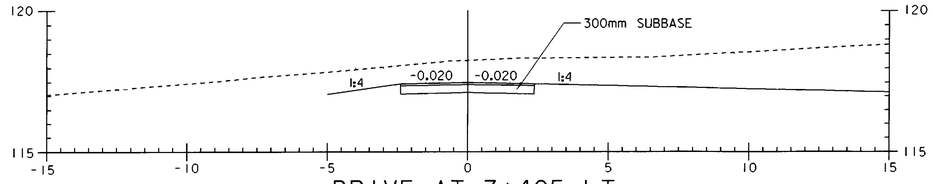

DRIVE AT 7+405 LT
A - A

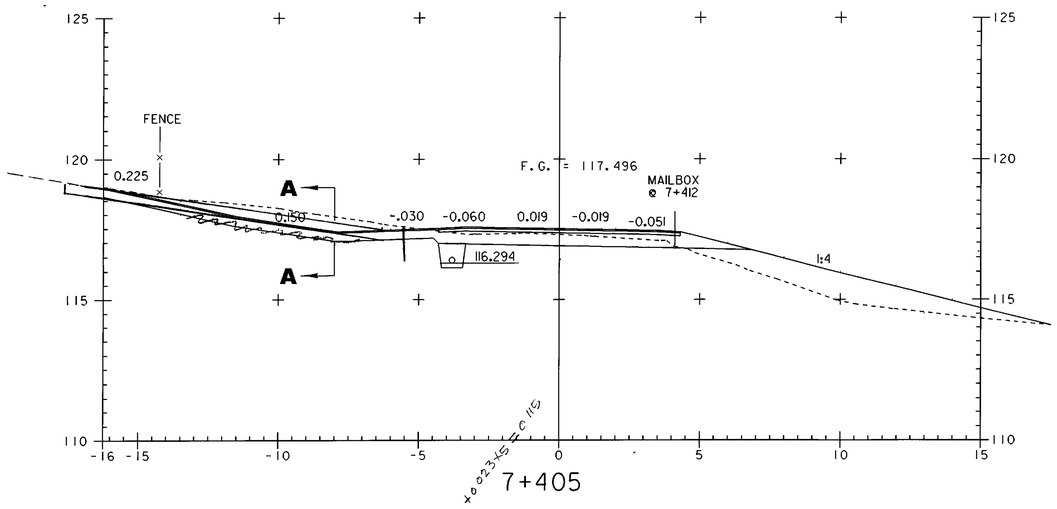

7+405

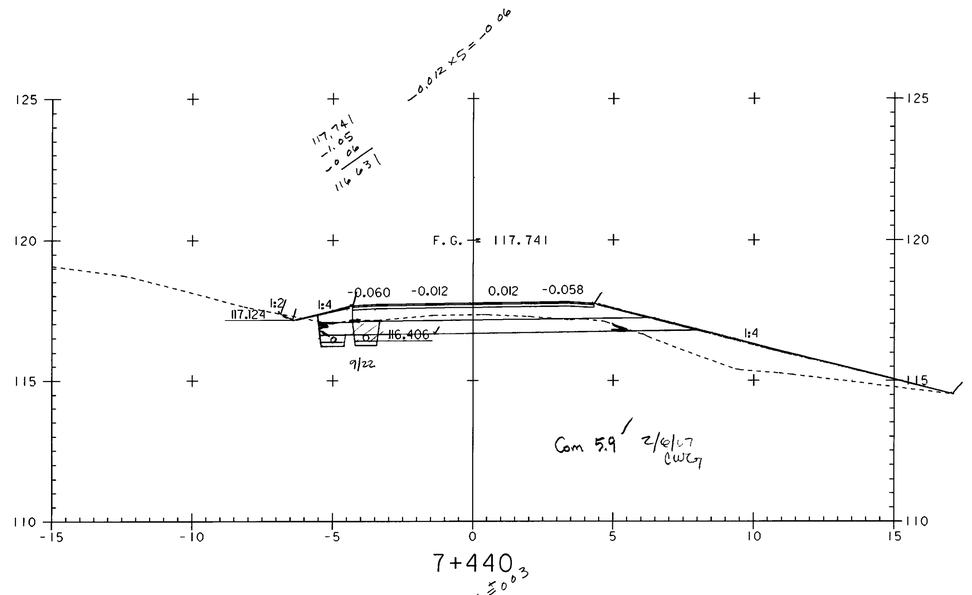

7+440

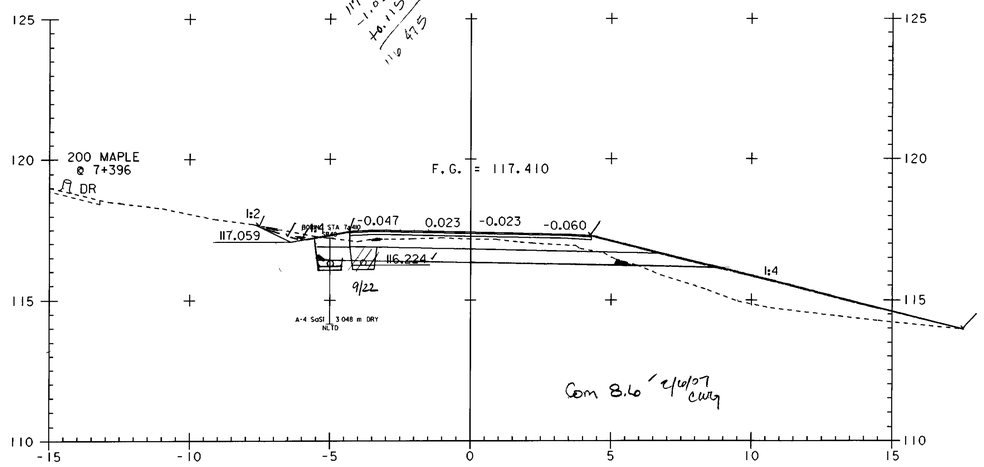

7+400

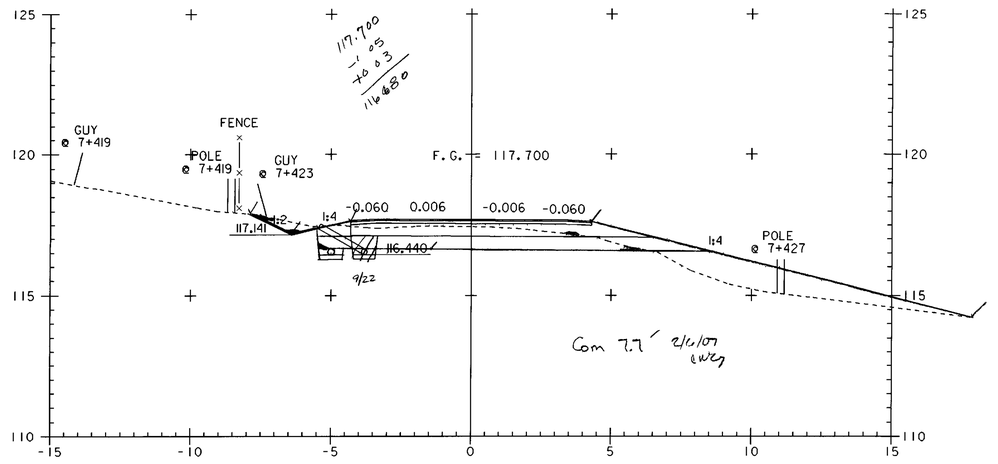

7+420

0 2 4 6 8 10
SCALE IN METERS

PROJECT NAME:	HIGHGATE - FRANKLIN
PROJECT NUMBER:	STP RS 0301(1) SA
FILE NAME: ...85c060\design\dc060x09.dgn	PLOT DATE: 09-MAY-2005
PROJECT LEADER: DELLASANTA	DRAWN BY: SQUAD B
DESIGNED BY: SQUAD B	CHECKED BY: SQUAD B
IPARM FILE NAME: dc060x0913.1	SHEET 398 OF 450

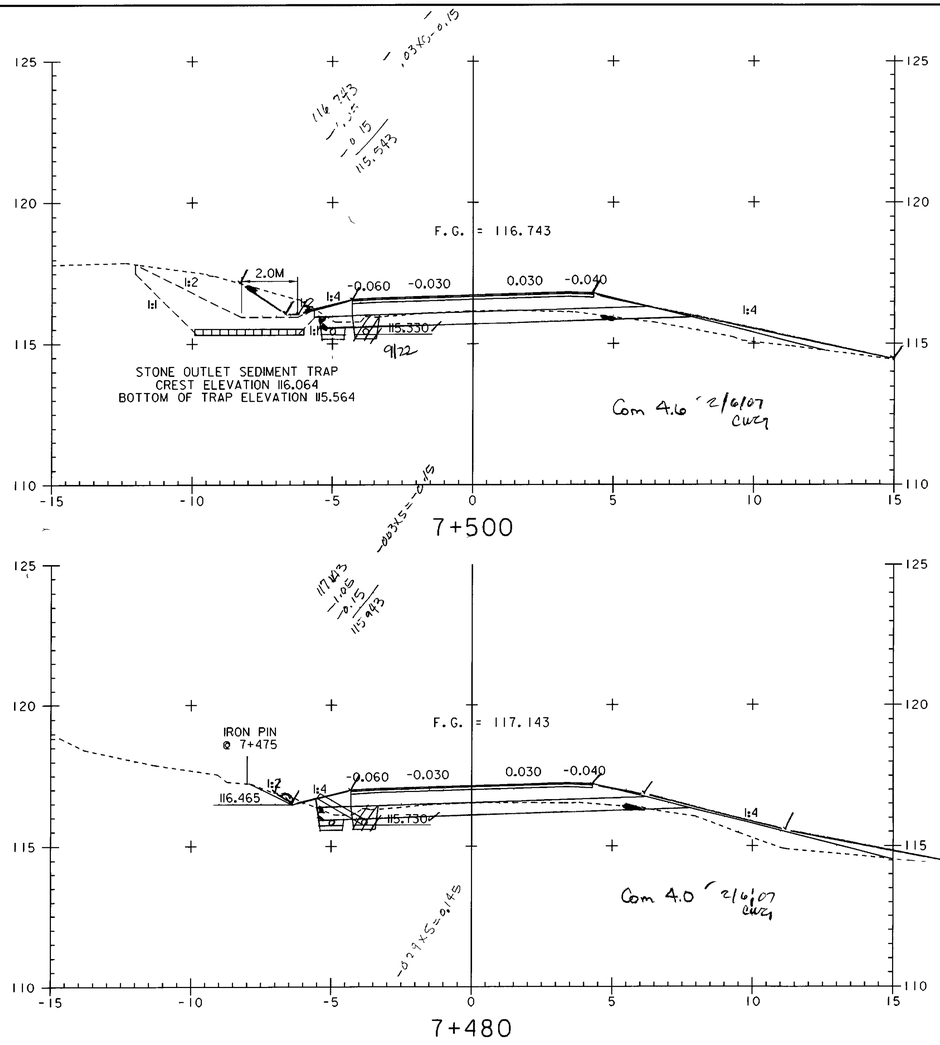

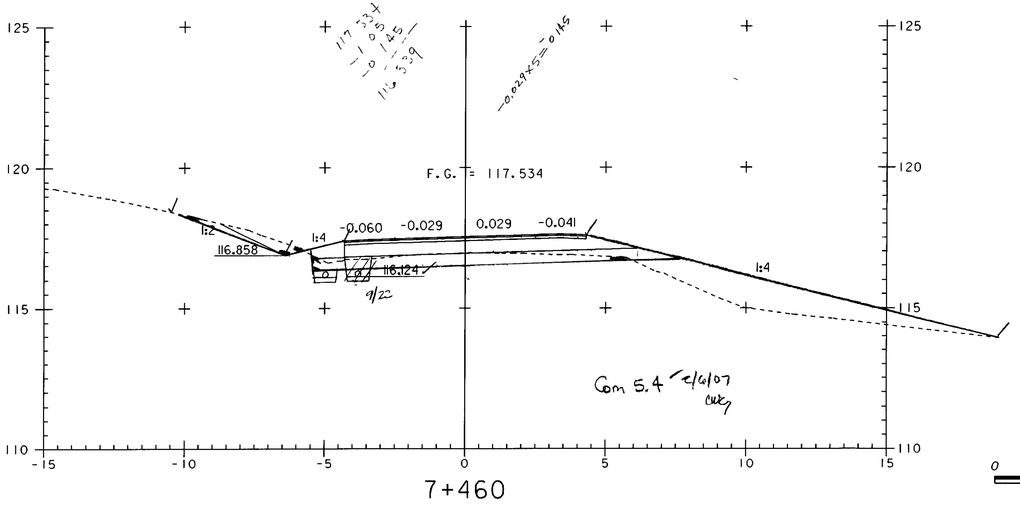

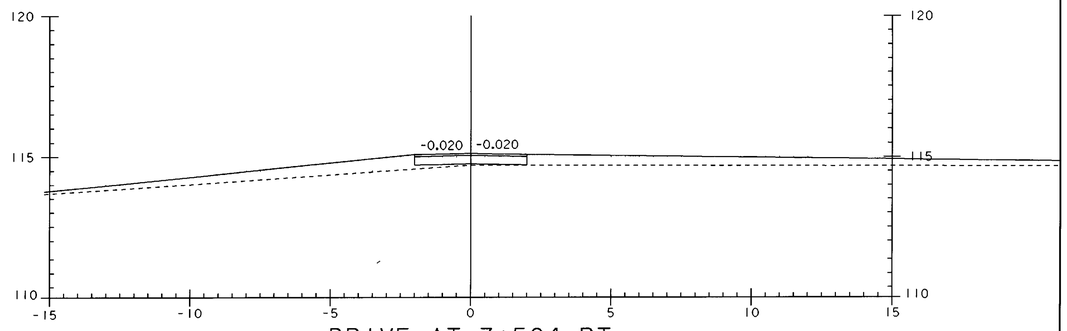

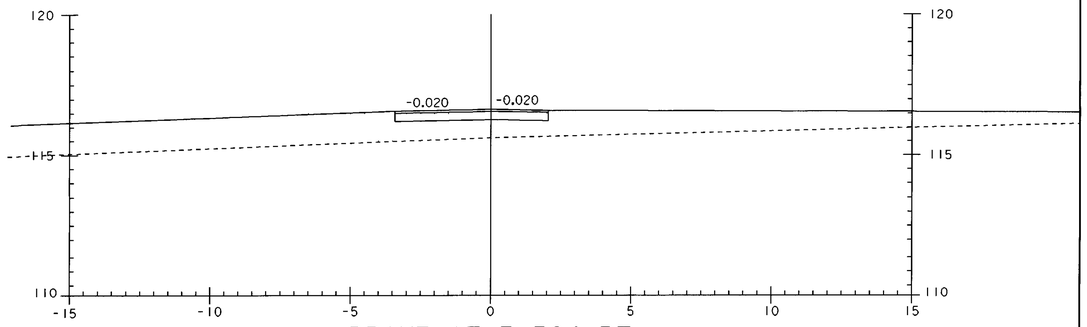

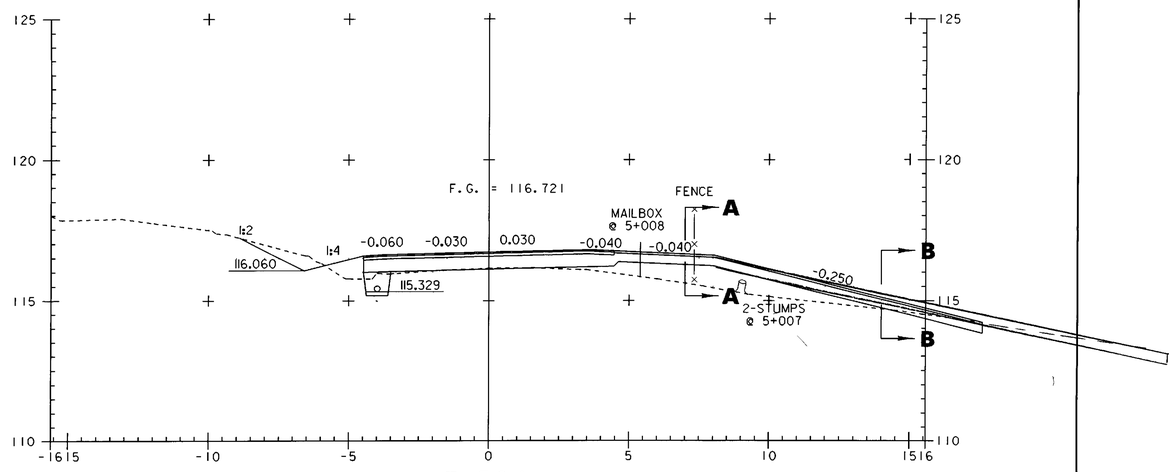

0 2 4 6 8 10
SCALE IN METERS

PROJECT NAME:	HIGHGATE - FRANKLIN
PROJECT NUMBER:	STP RS 0301(1) SA
FILE NAME: ...85c060\design\dc060x09.dgn	PLOT DATE: 09-MAY-2005
PROJECT LEADER: DELLASANTA	DRAWN BY: SQUAD B
DESIGNED BY: SQUAD B	CHECKED BY: SQUAD B
IPARM FILE NAME: dc060x0914.i	SHEET 399 OF 450

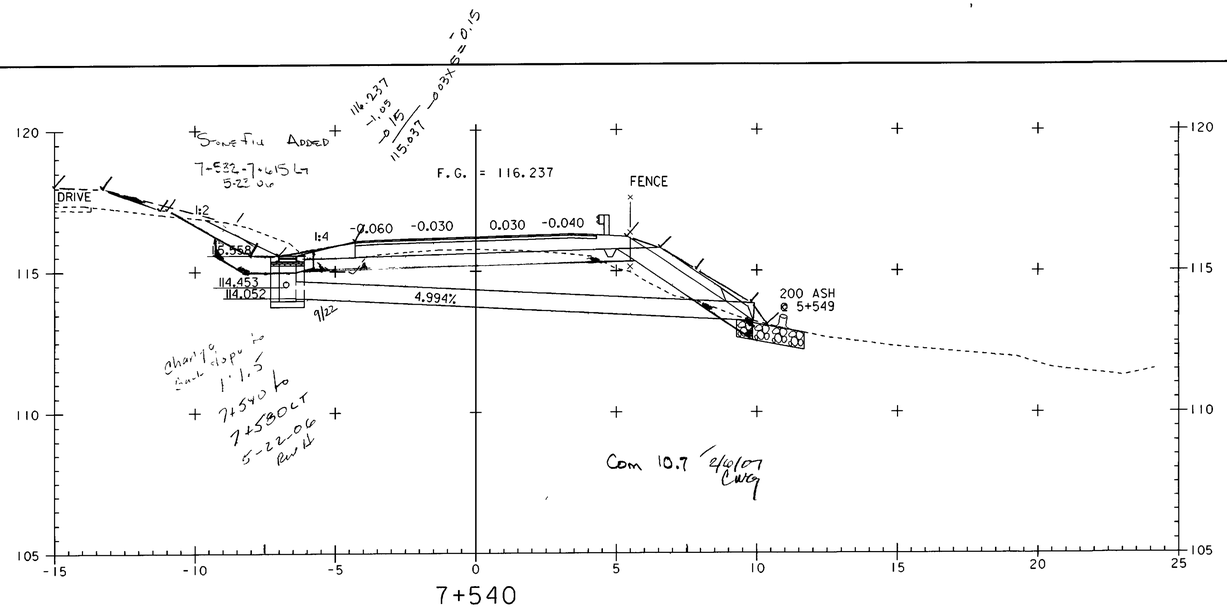

7+540

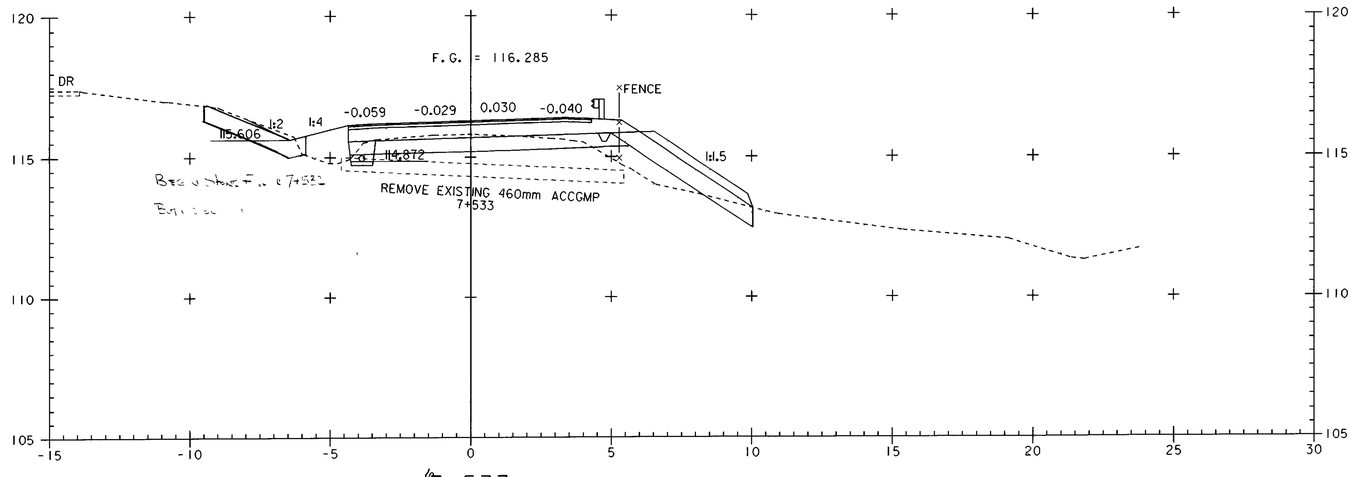

7+533

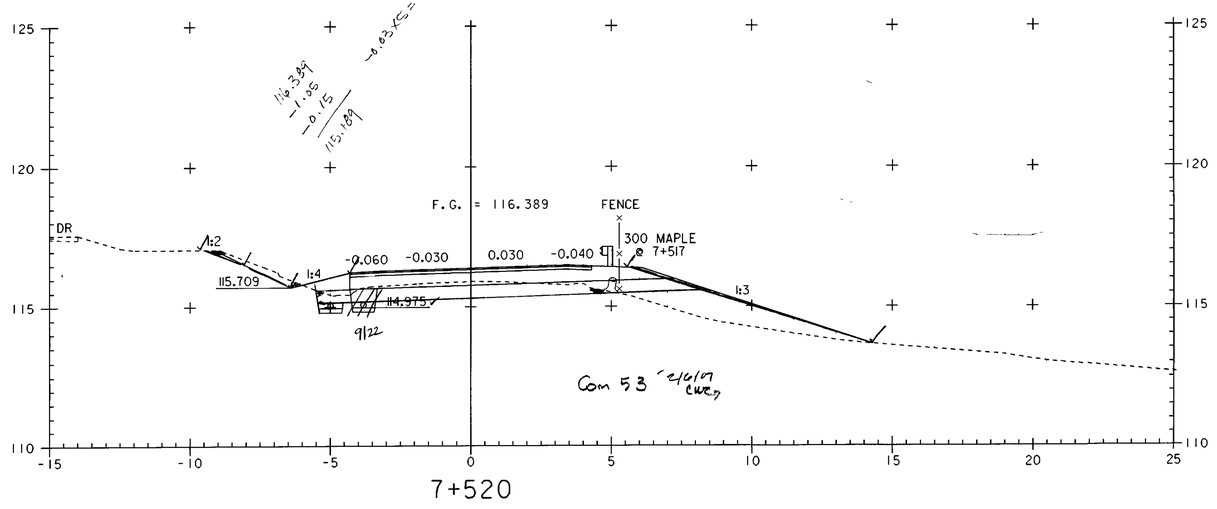

7+520

0 2 4 6 8 10
SCALE IN METERS

PROJECT NAME:	HIGHGATE - FRANKLIN
PROJECT NUMBER:	STP RS 0301(1) SA
FILE NAME: ...85c060\design\dc060x09.dgn	PLOT DATE: 09-MAY-2005
PROJECT LEADER: DELLASANTA	DRAWN BY: SQUAD B
DESIGNED BY: SQUAD B	CHECKED BY: SQUAD B
IPARM FILE NAME: dc060x0915.1	SHEET 400 OF 450

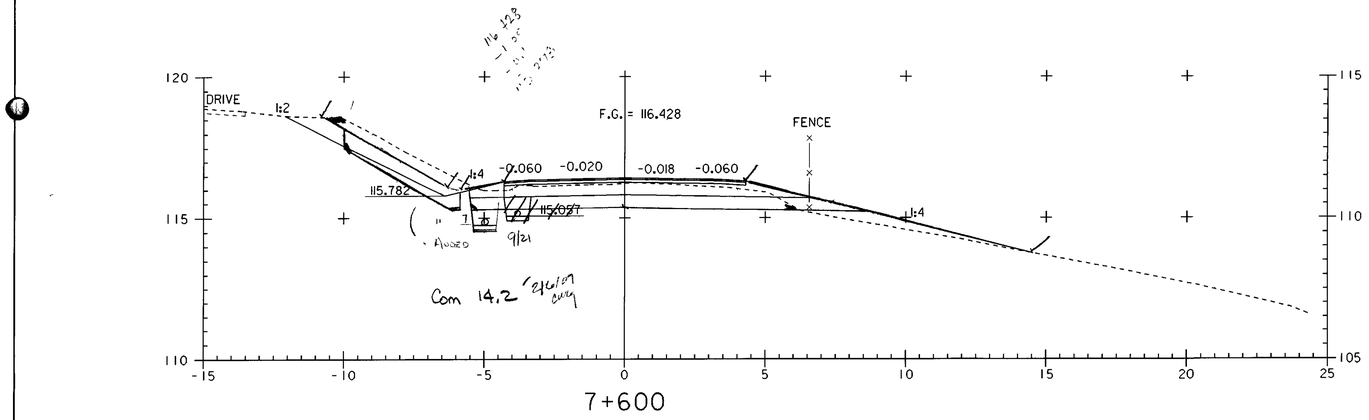

7+600

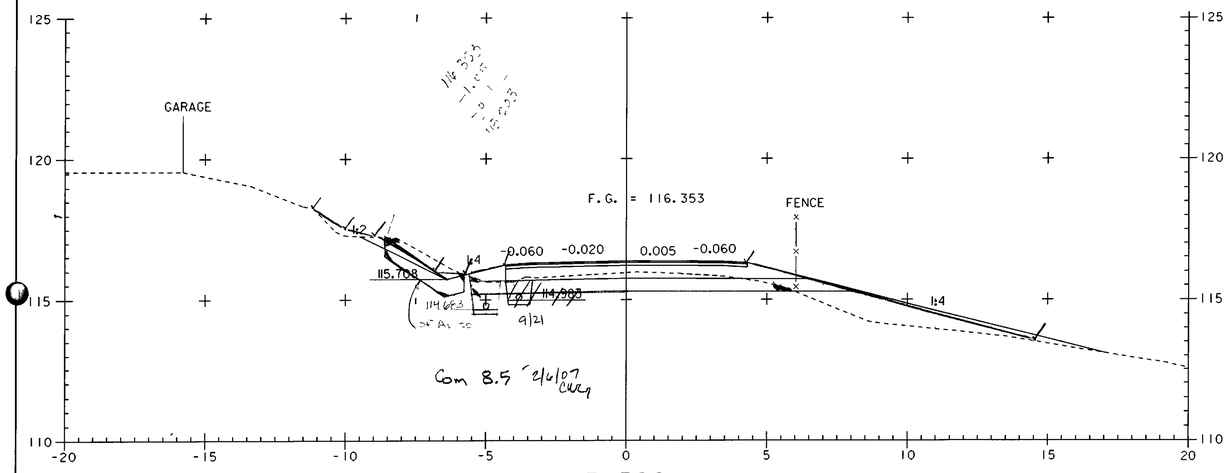

7+580

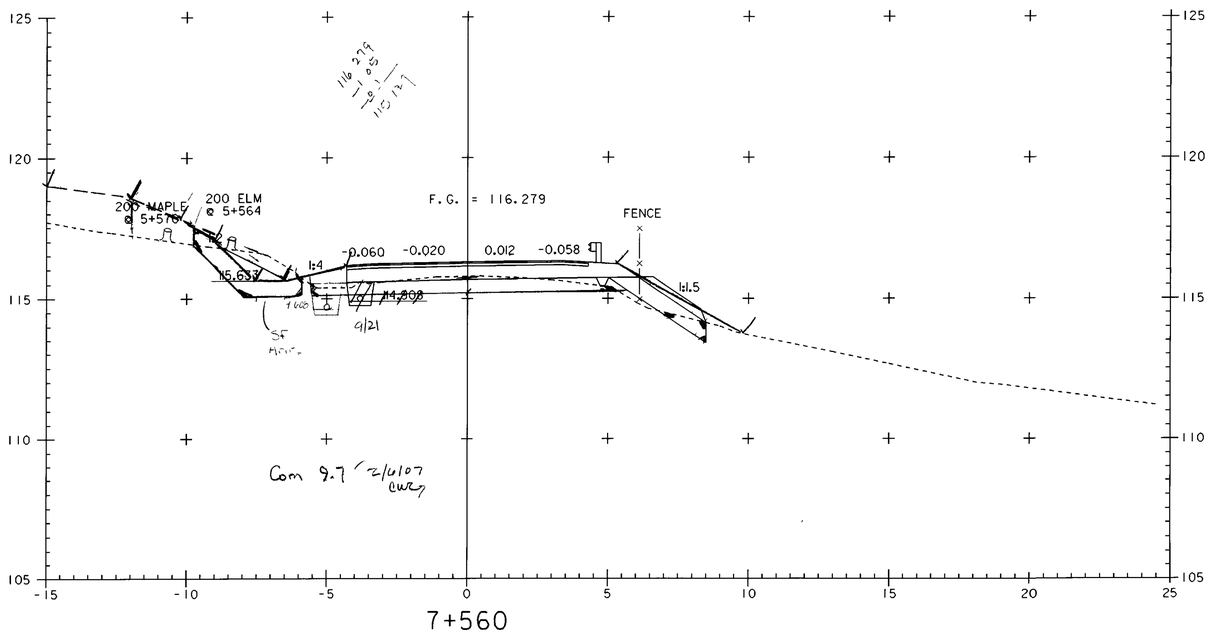

7+560

0 2 4 6 8 10
SCALE IN METERS

PROJECT NAME:	HIGHGATE - FRANKLIN
PROJECT NUMBER:	STP RS 0301(1) SA
FILE NAME: ...85c060\design\dc060x09.dgn	PLOT DATE: 09-MAY-2005
PROJECT LEADER: DELLASANTA	DRAWN BY: SQUAD B
DESIGNED BY: SQUAD B	CHECKED BY: SQUAD B
IPARM FILE NAME: dc060x0916.i	SHEET 401 OF 450

TE: 127m x (0.6+0.4 / 2) x (300+0.4+0.6) = 57cm

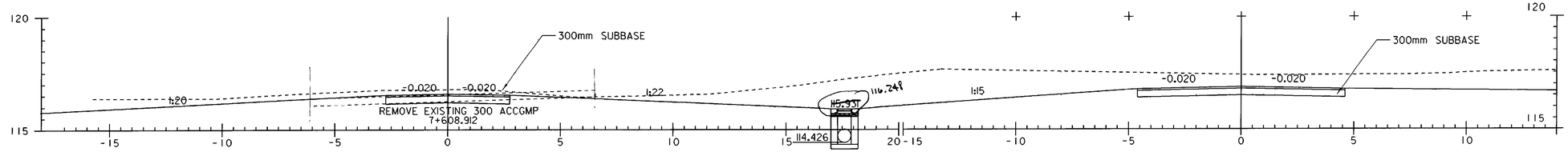

DRIVE AT 7+618 LT
A - A

DRIVE AT 7+653 LT
A - A

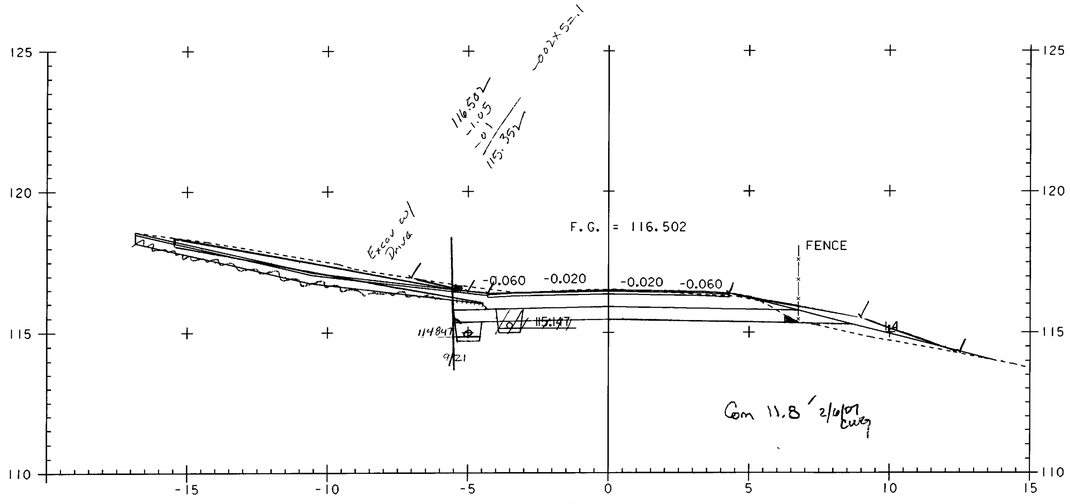

7+620

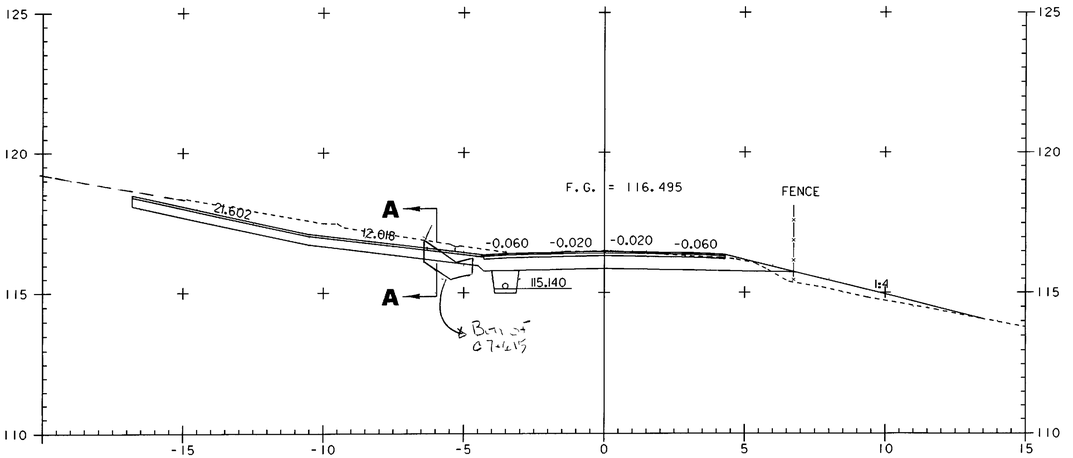

7+618

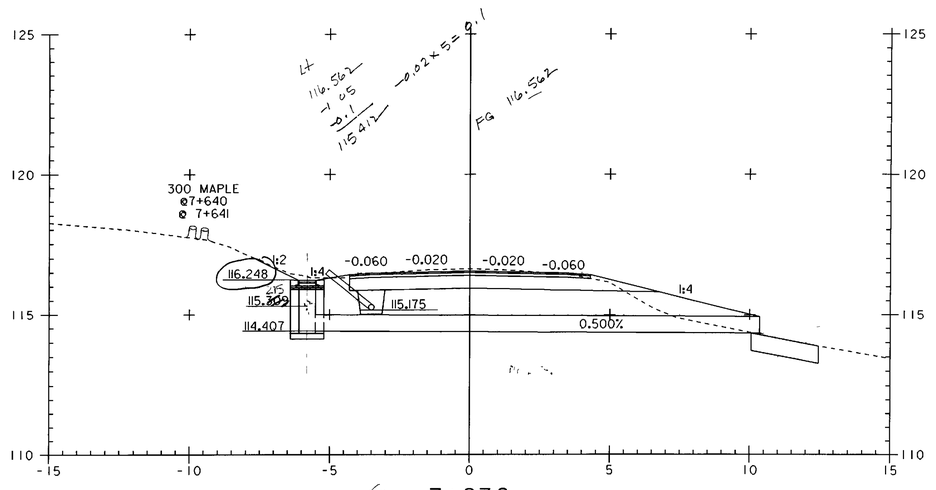

7+636

0 2 4 6 8 10
SCALE IN METERS

PROJECT NAME: HIGHGATE - FRANKLIN	
PROJECT NUMBER: STP RS 0301(1) SA	
FILE NAME: ...85c060\design\dc060x09.dgn	PLOT DATE: 09-MAY-2005
PROJECT LEADER: DELLASANTA	DRAWN BY: SQUAD B
DESIGNED BY: SQUAD B	CHECKED BY: SQUAD B
IPARM FILE NAME: dc060x0917.I	SHEET 402 OF 450

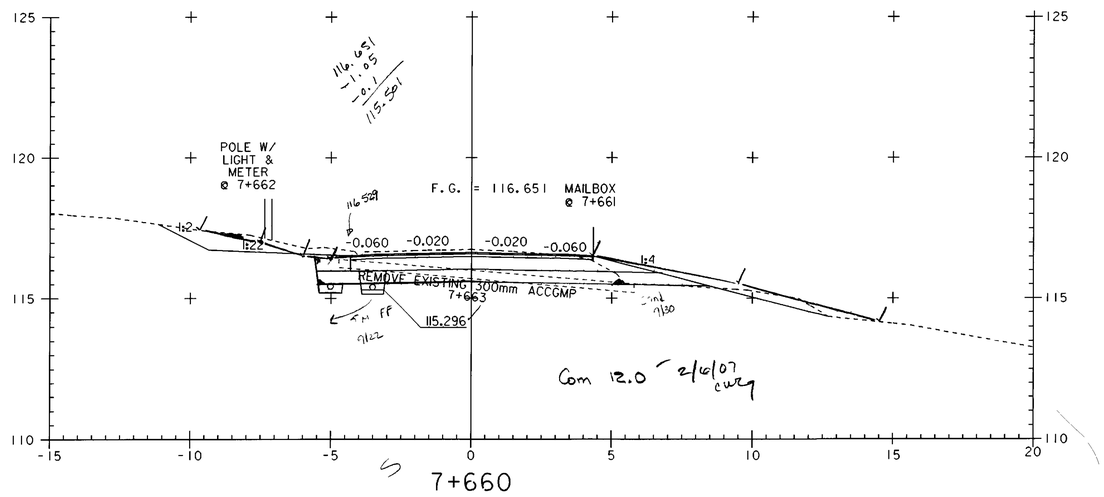

7+660

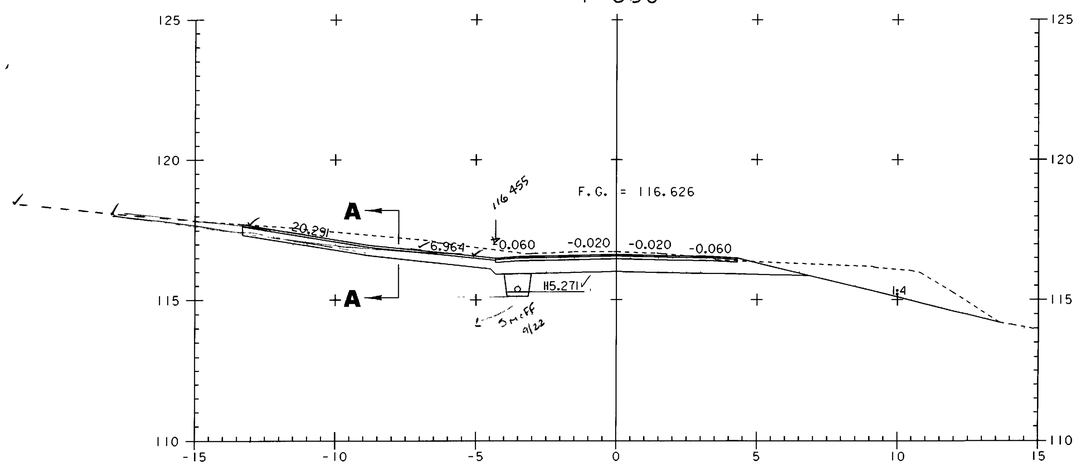

7+653

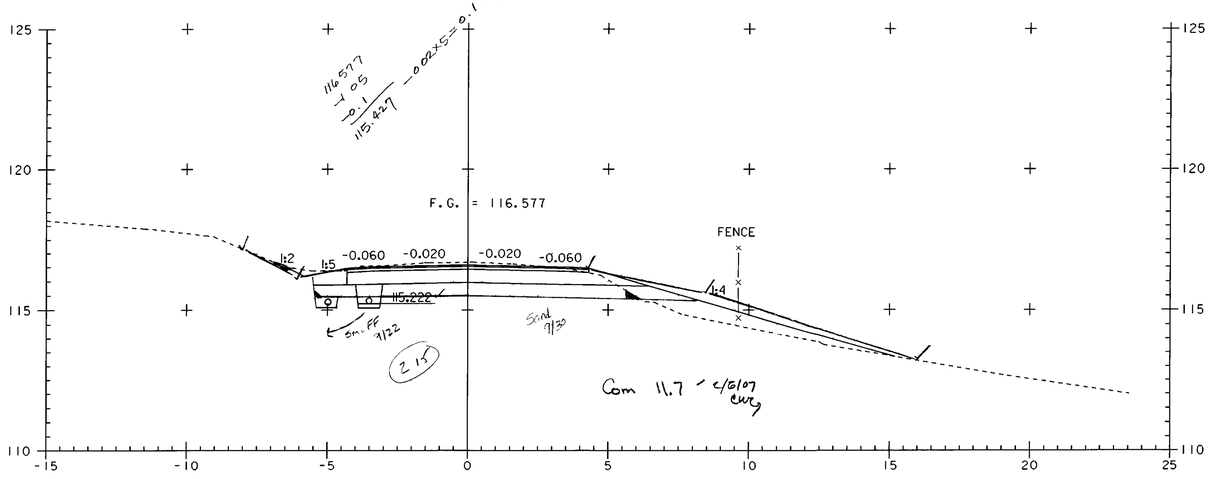

7+640

0 2 4 6 8 10
SCALE IN METERS

PROJECT NAME:	HIGHGATE - FRANKLIN
PROJECT NUMBER:	STP RS 0301(1) SA
FILE NAME: ...85c060\design\dc060x09.dgn	PLOT DATE: 09-MAY-2005
PROJECT LEADER: DELLASANTA	DRAWN BY: SQUAD B
DESIGNED BY: SQUAD B	CHECKED BY: SQUAD B
IPARM FILE NAME: dc060x0918.i	SHEET 403 OF 450

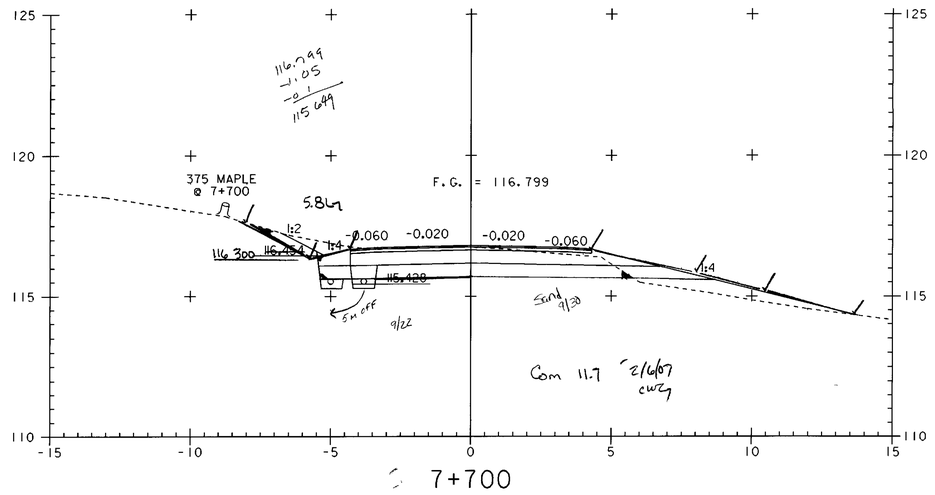

7+700

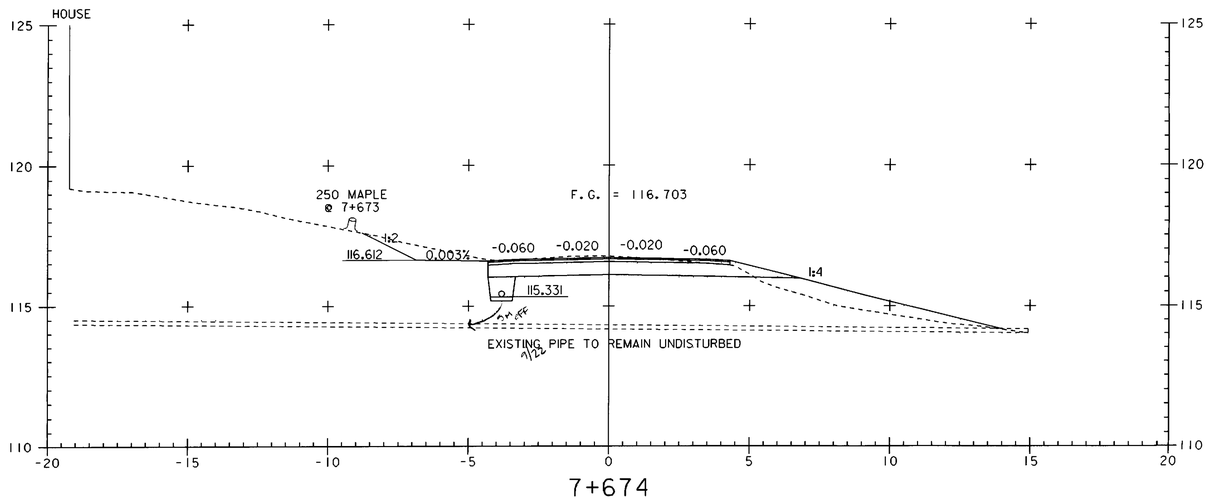

7+674

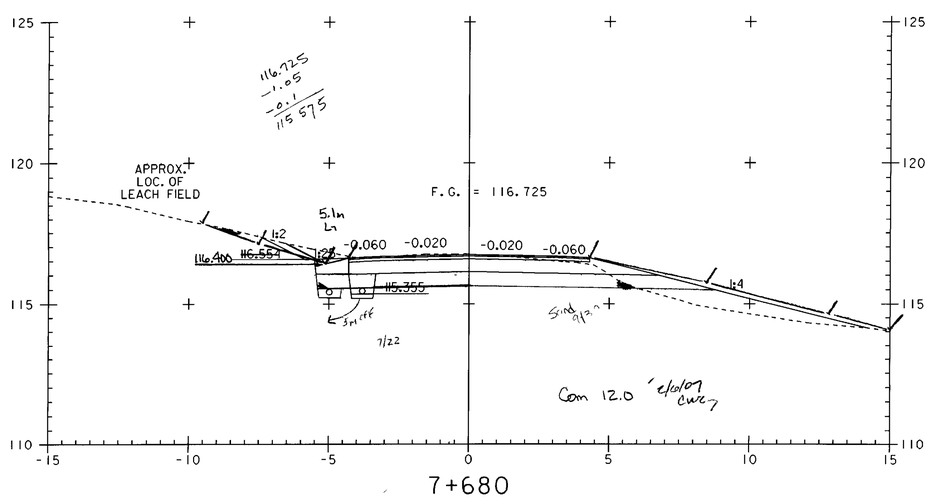

7+680

0 2 4 6 8 10
SCALE IN METERS

PROJECT NAME:	HIGHGATE - FRANKLIN
PROJECT NUMBER:	STP RS 0301(I) SA
FILE NAME: ...85c060\design\dc060x09.dgn	PLOT DATE: 09-MAY-2005
PROJECT LEADER: DELLASANTA	DRAWN BY: SQUAD B
DESIGNED BY: SQUAD B	CHECKED BY: SQUAD B
IPARM FILE NAME: dc060x0919.i	SHEET 404 OF 450

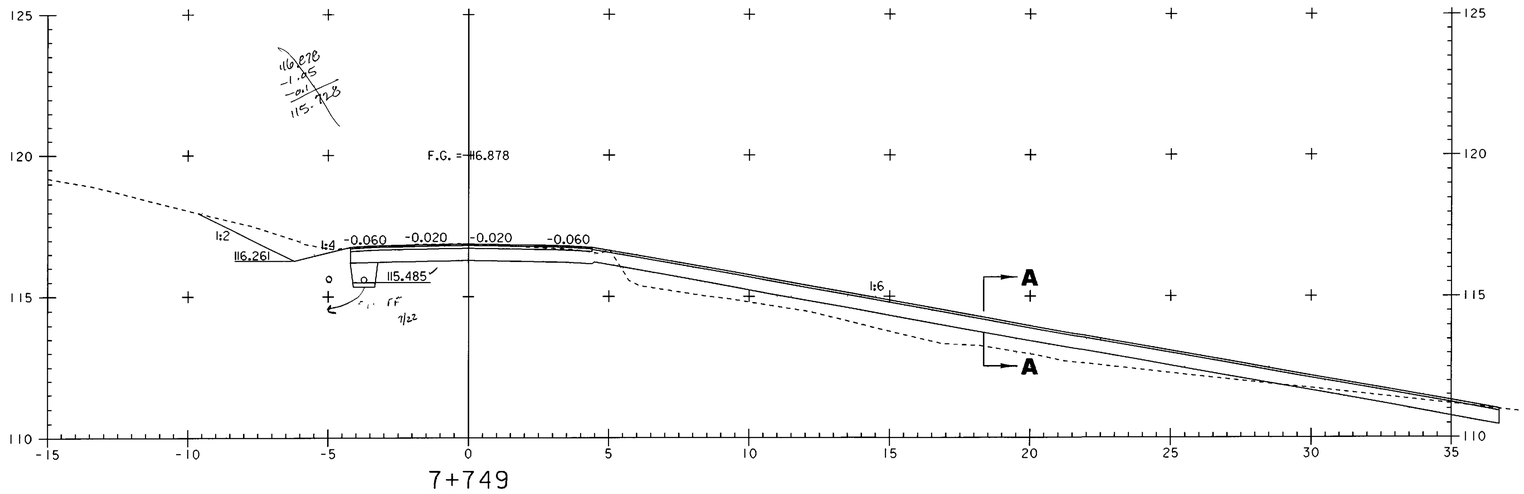

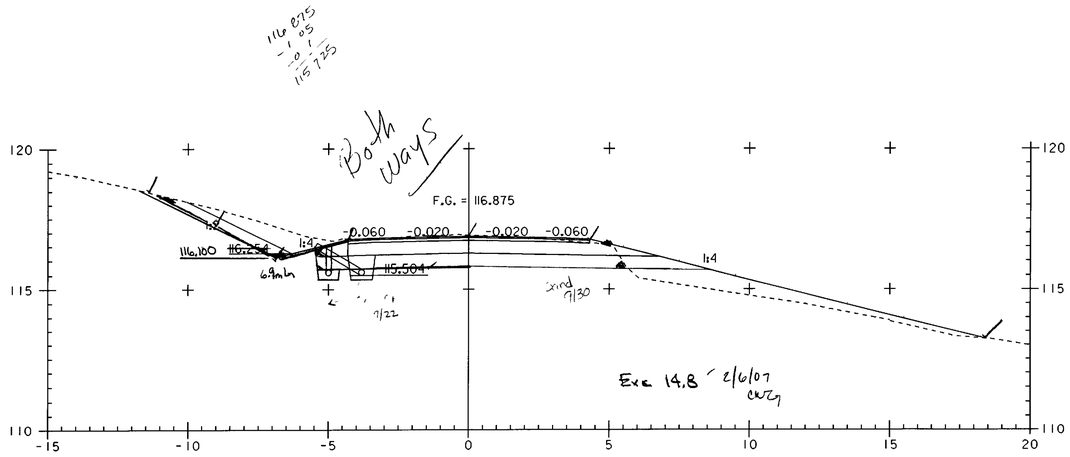

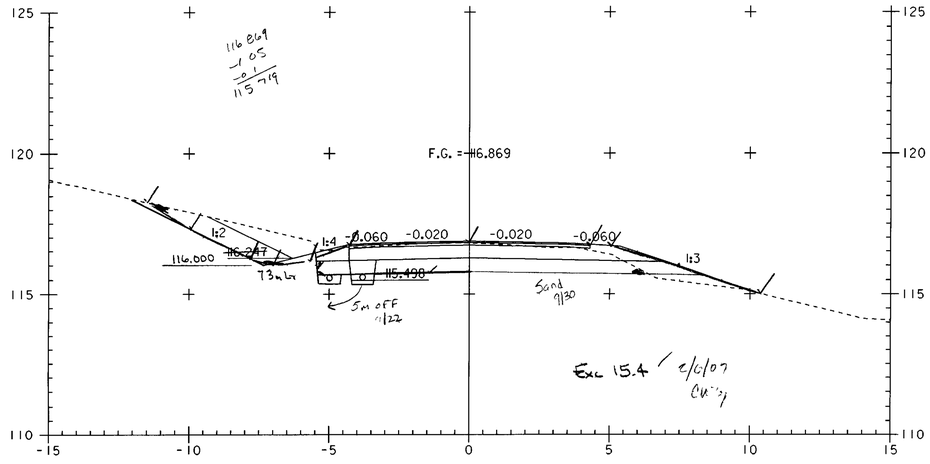

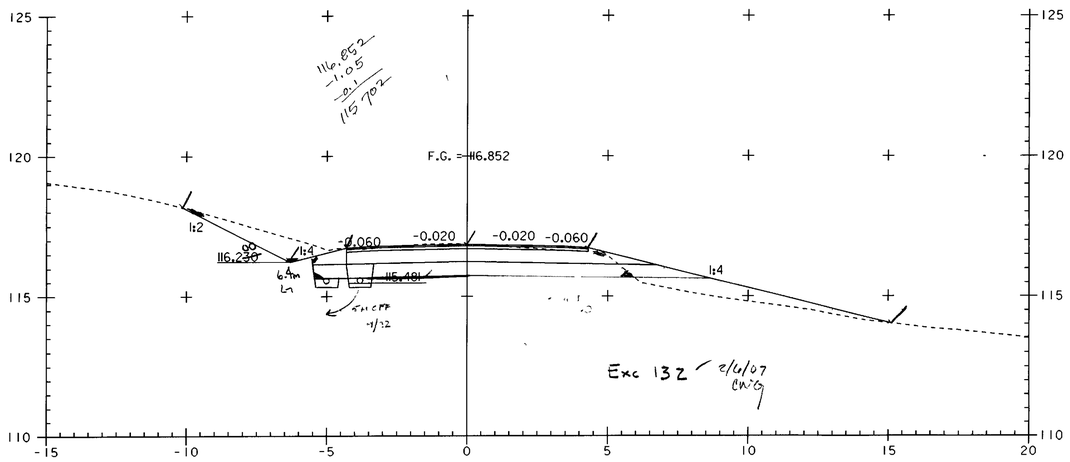

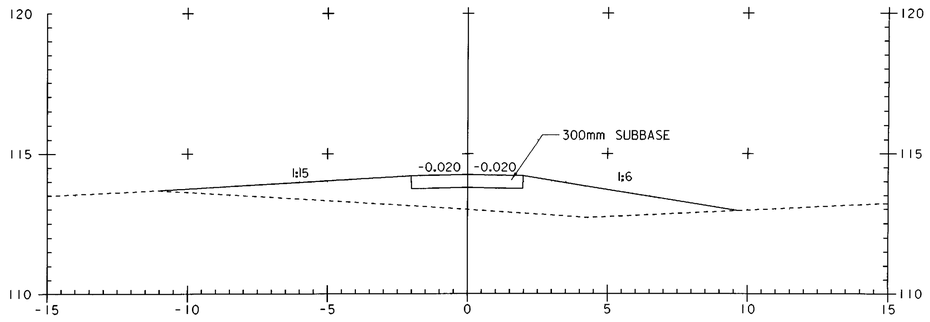

0 2 4 6 8 10
SCALE IN METERS

PROJECT NAME:	HIGHGATE - FRANKLIN
PROJECT NUMBER:	STP RS 0301(1) SA
FILE NAME: ...85c060\design\dc060x10.dgn	PLOT DATE: 09-MAY-2005
PROJECT LEADER: DELLASANTA	DRAWN BY: SQUAD B
DESIGNED BY: SQUAD B	CHECKED BY: SQUAD B
IPARM FILE NAME: dc050x101.1	SHEET 405 OF 450

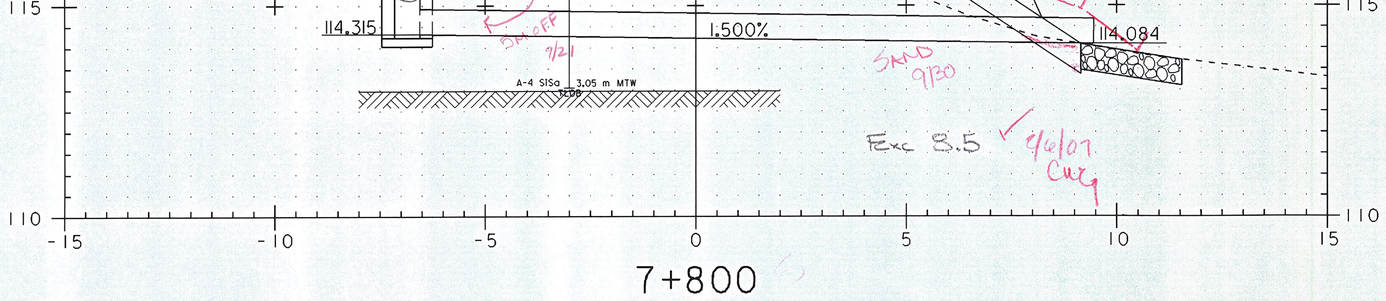

7+800

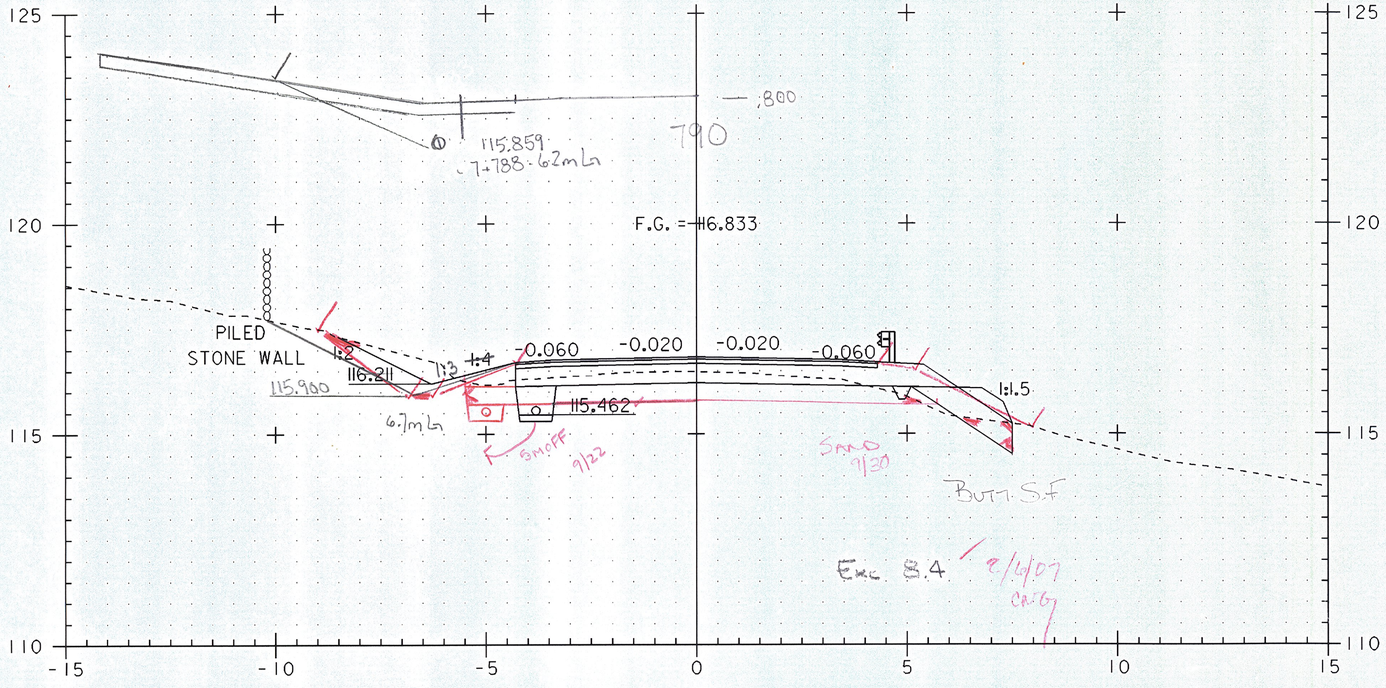

7+780

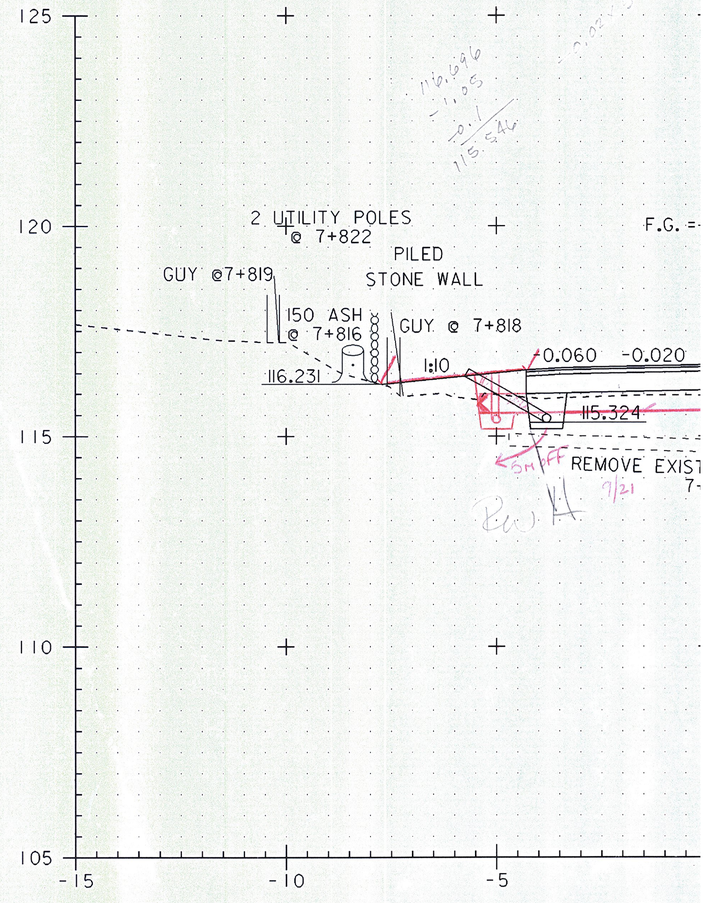

7+

0 2 4 6 8 10

SCALE IN METERS

DRIVE AT 7+827 LT
SECTION A - A

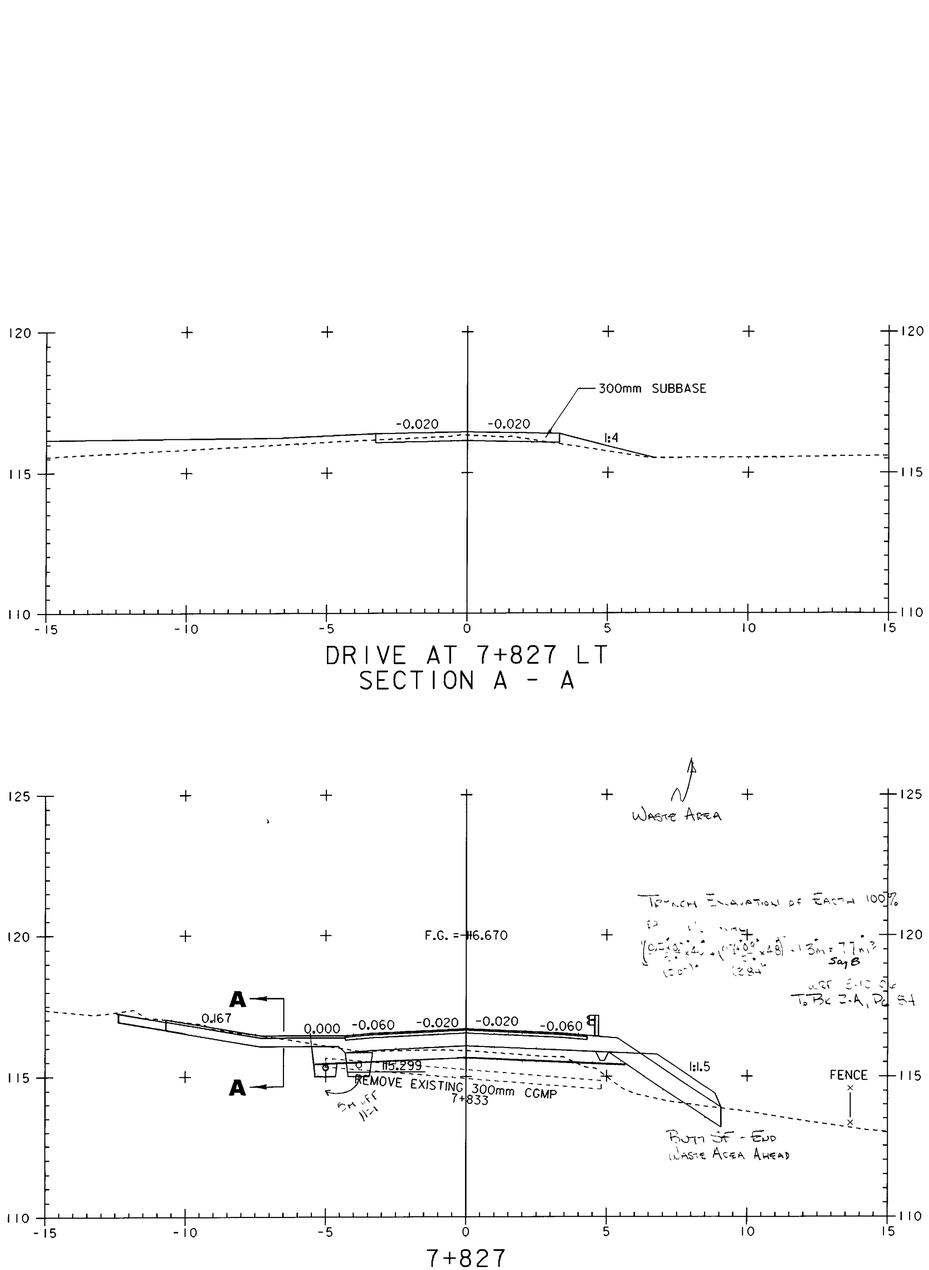

7+827

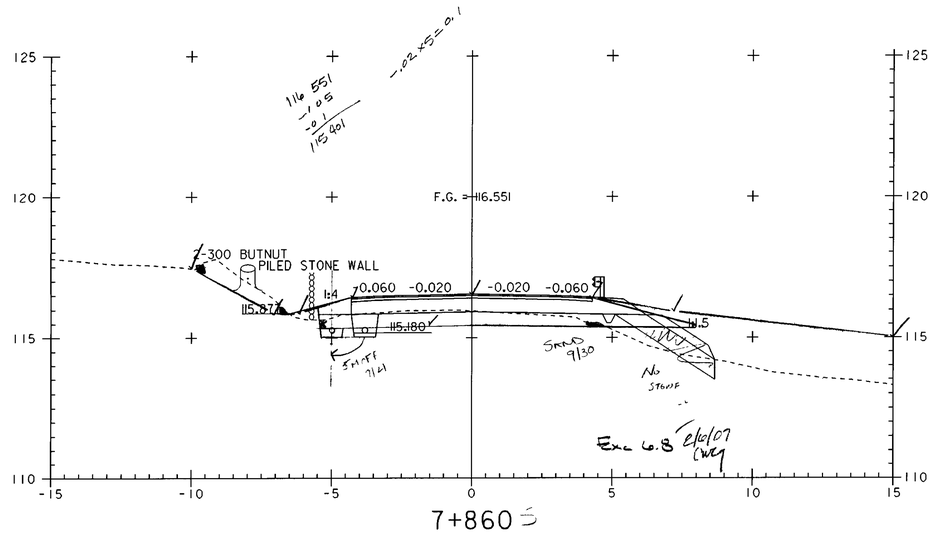

7+860

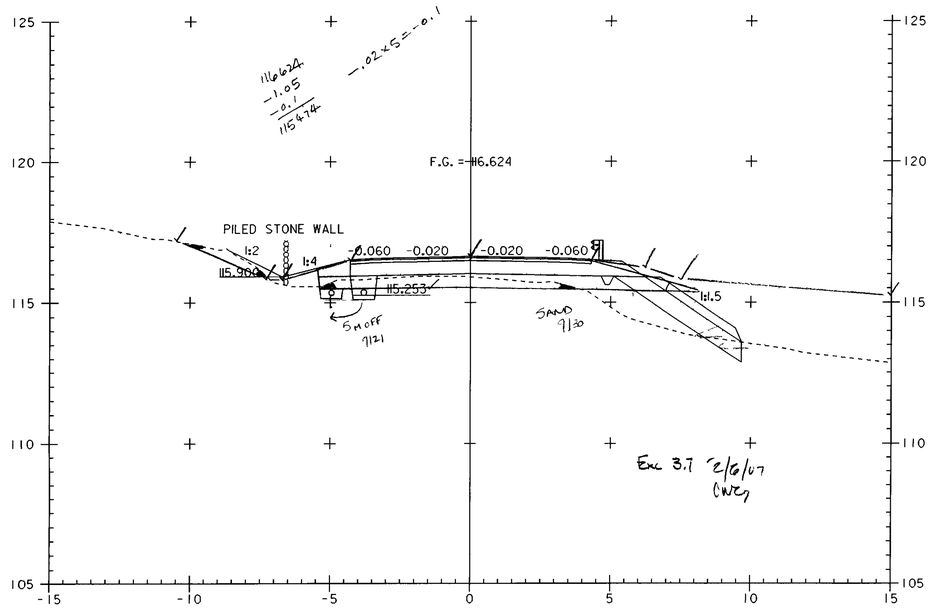

7+840

0 2 4 6 8 10
SCALE IN METERS

PROJECT NAME:	HIGHGATE - FRANKLIN
PROJECT NUMBER:	STP RS 0301(1) SA

FILE NAME: ...85c060\design\dc060x10.dgn	PLOT DATE: 09-MAY-2005
PROJECT LEADER: DELLASANTA	DRAWN BY: SQUAD B
DESIGNED BY: SQUAD B	CHECKED BY: SQUAD B
IPARM FILE NAME: dc060x103.1	SHEET 407 OF 450

STONE OUTLET SEDIMENT TRAP
CREST ELEVATION 115.758
BOTTOM OF TRAP ELEVATION 115.258

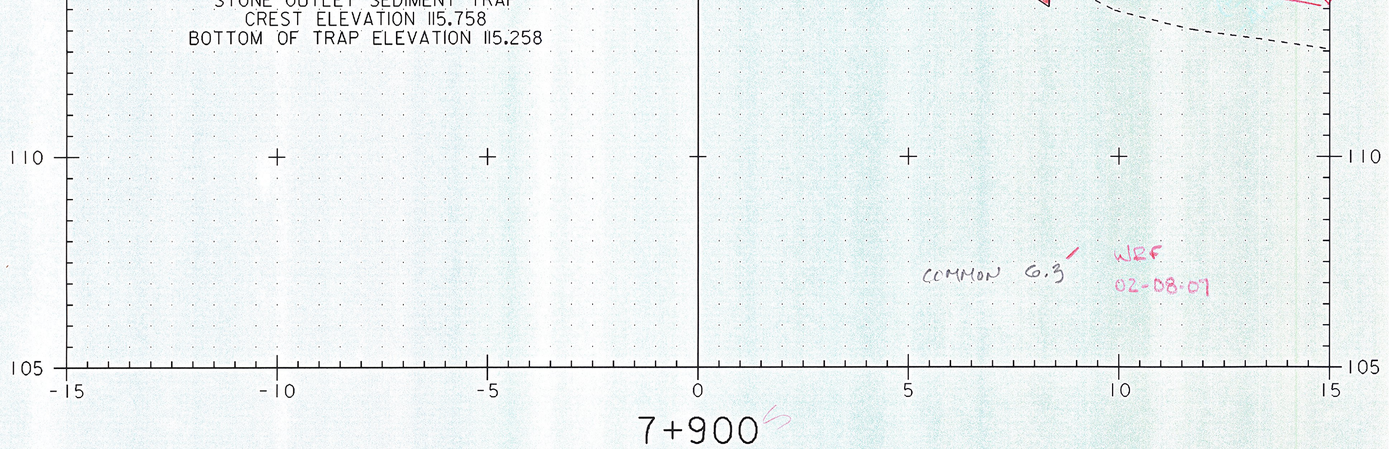

COMMON 6.3 WBF 02-08-07

7+900

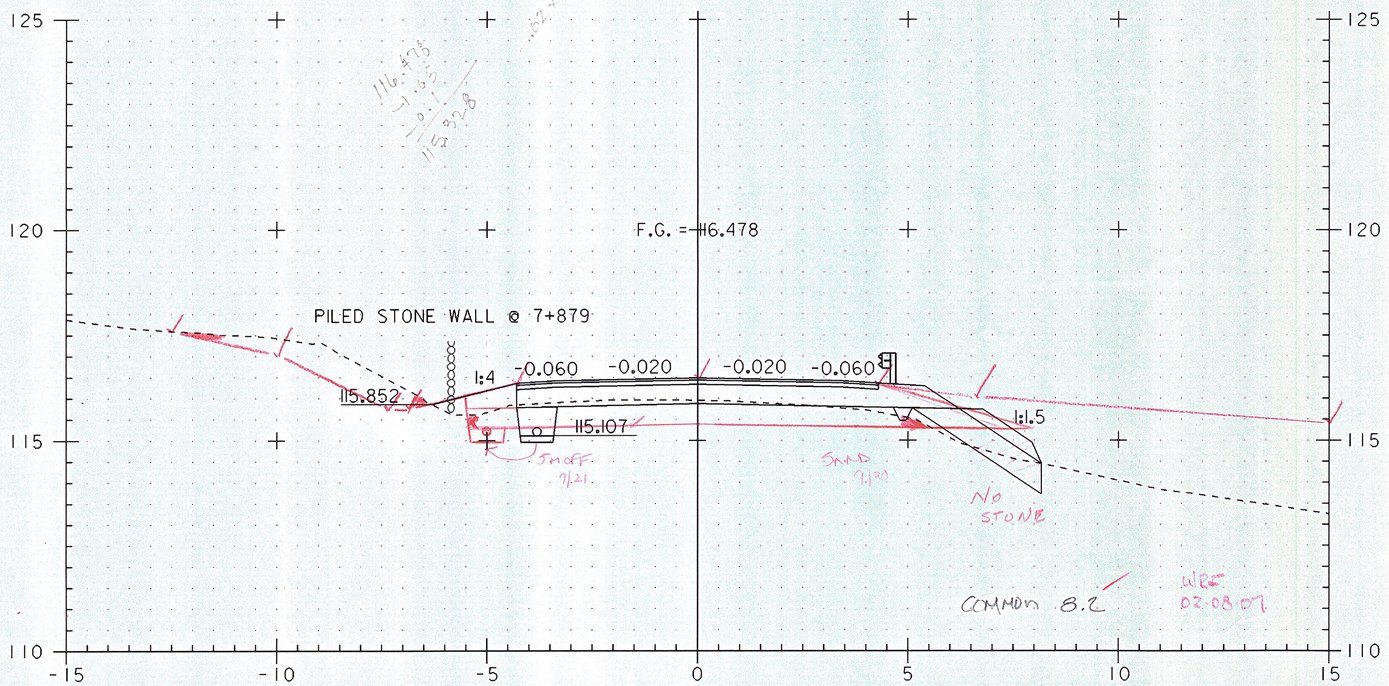

COMMON 8.2 WBF 02-08-07

7+880

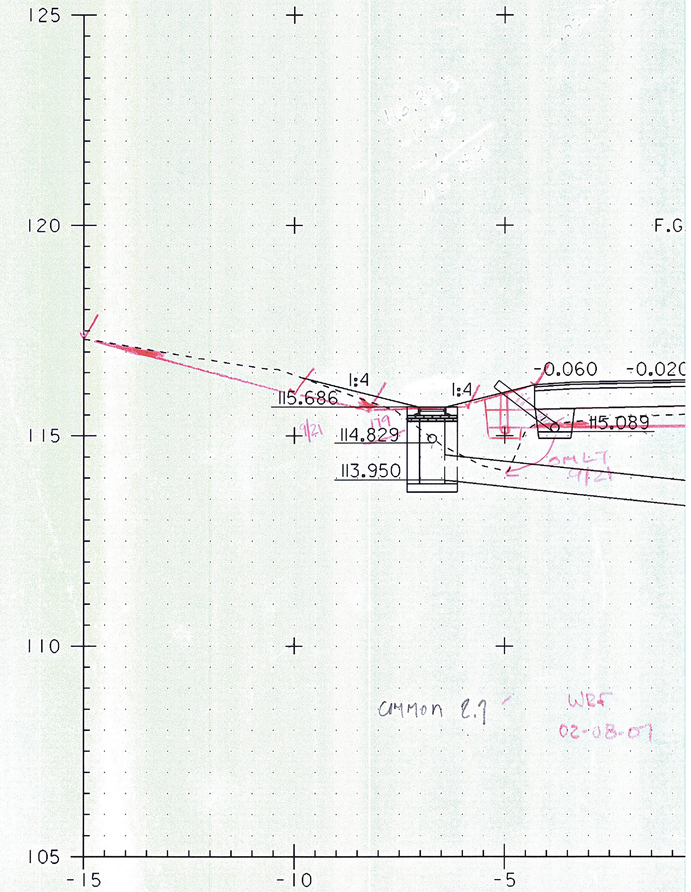

COMMON 8.1 WBF 02-08-07

7-

0 2 4 6 8 10
SCALE IN METERS

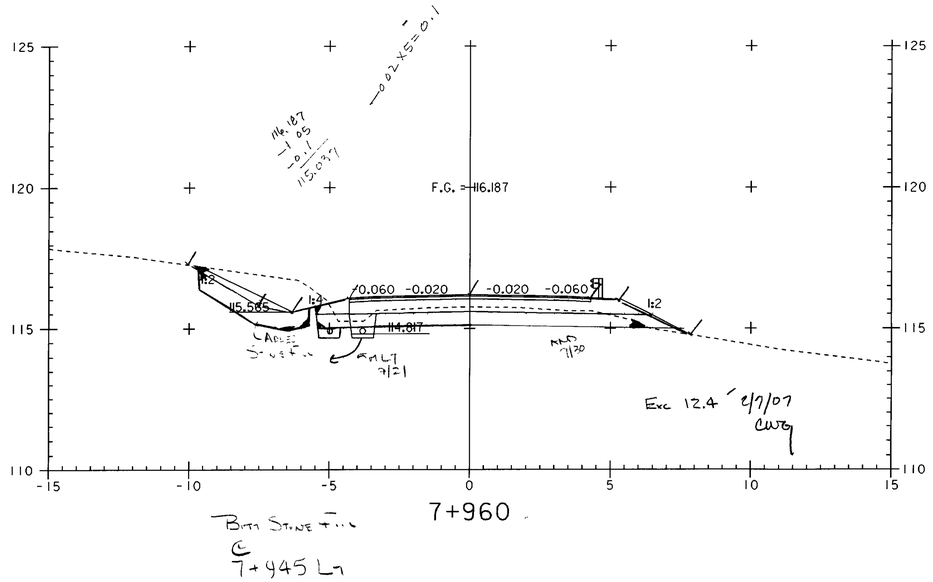

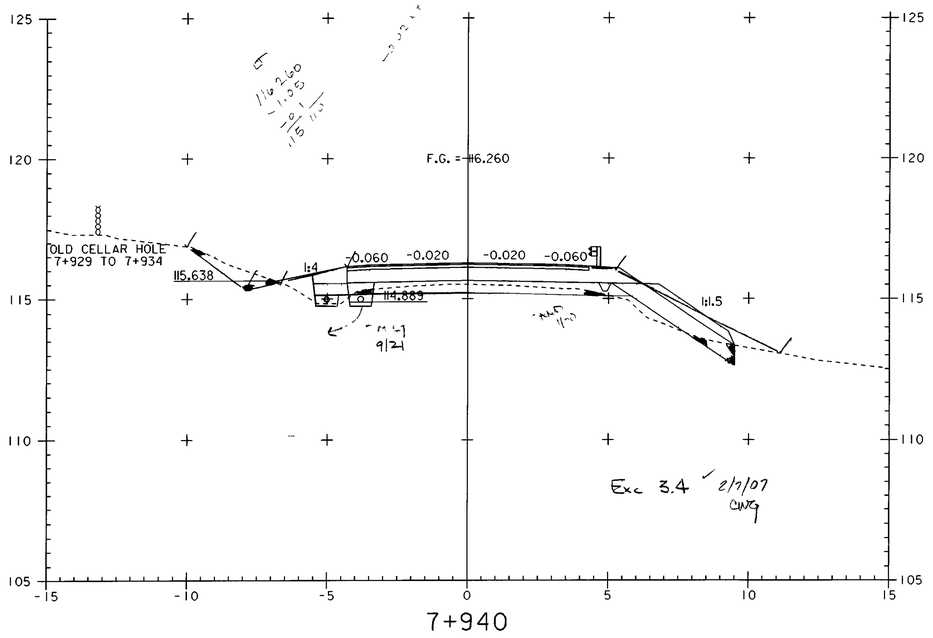

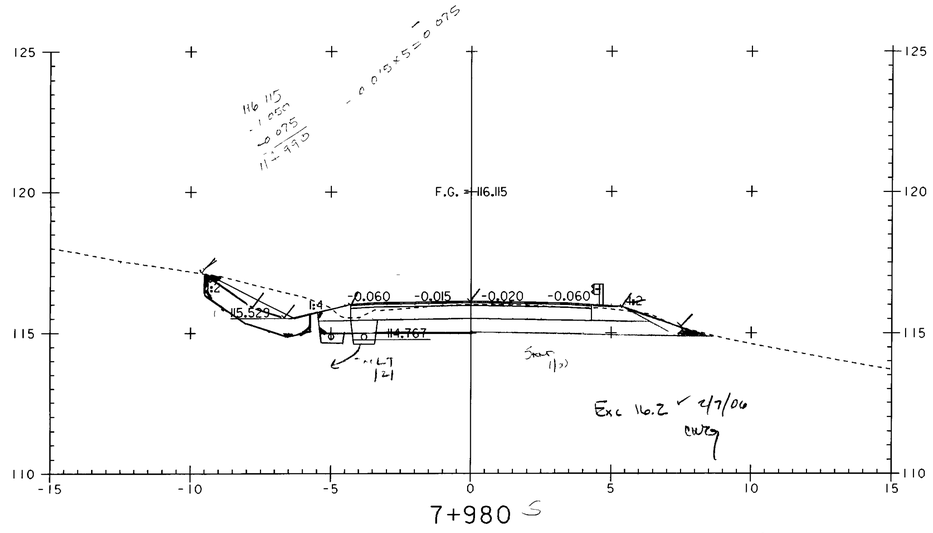

0 2 4 6 8 10
SCALE IN METERS

PROJECT NAME:	HIGHGATE - FRANKLIN
PROJECT NUMBER:	STP RS 0301(1) SA
FILE NAME: ...85c060\design\dc060x10.dgn	PLOT DATE: 09-MAY-2005
PROJECT LEADER: DELLASANTA	DRAWN BY: SQUAD B
DESIGNED BY: SQUAD B	CHECKED BY: SQUAD B
IPARM FILE NAME: dc060x105.i	SHEET 409 OF 450

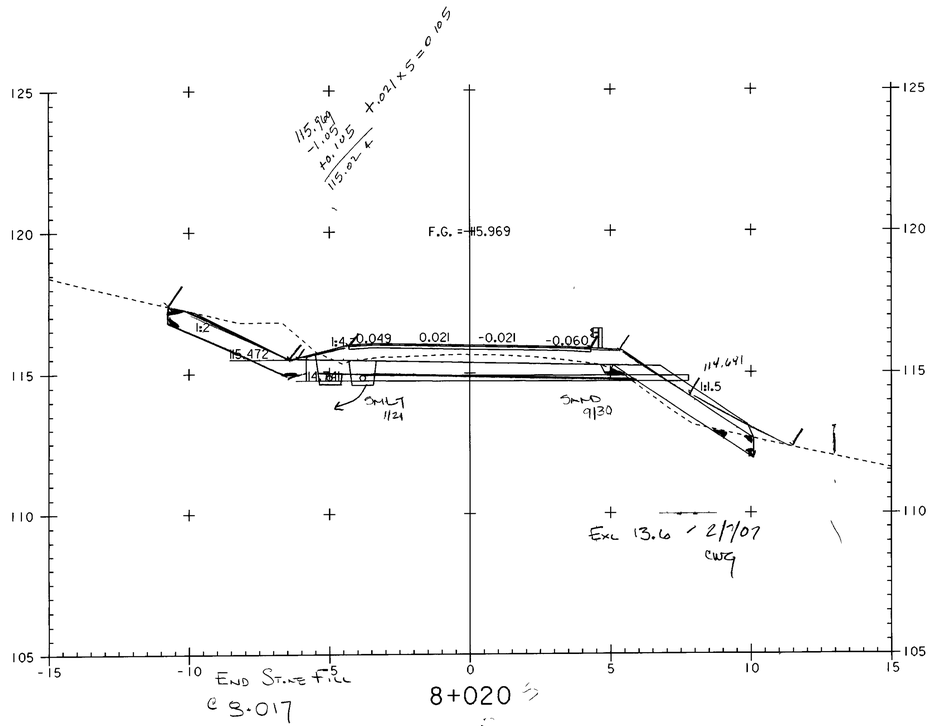

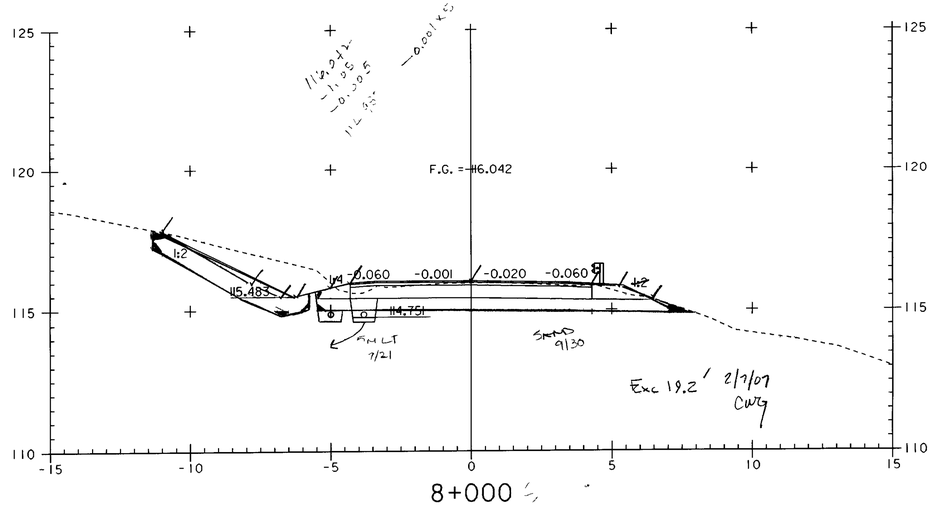

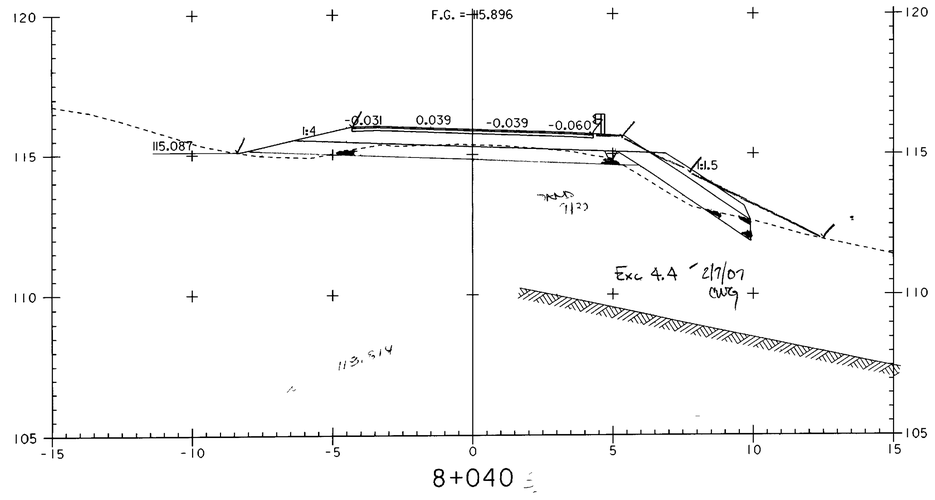

0 2 4 6 8 10
SCALE IN METERS

114.741
1083
114.758 psf

114.814
114.741
1073

PROJECT NAME:	HIGHGATE - FRANKLIN
PROJECT NUMBER:	STP RS 0301(1) SA
FILE NAME: ...85c060\design\dc060x10.dgn	PLOT DATE: 09-MAY-2005
PROJECT LEADER: DELLASANTA	DRAWN BY: SQUAD B
DESIGNED BY: SQUAD B	CHECKED BY: SQUAD B
IPARM FILE NAME: dc060x106.i	SHEET 410 OF 450

8+020

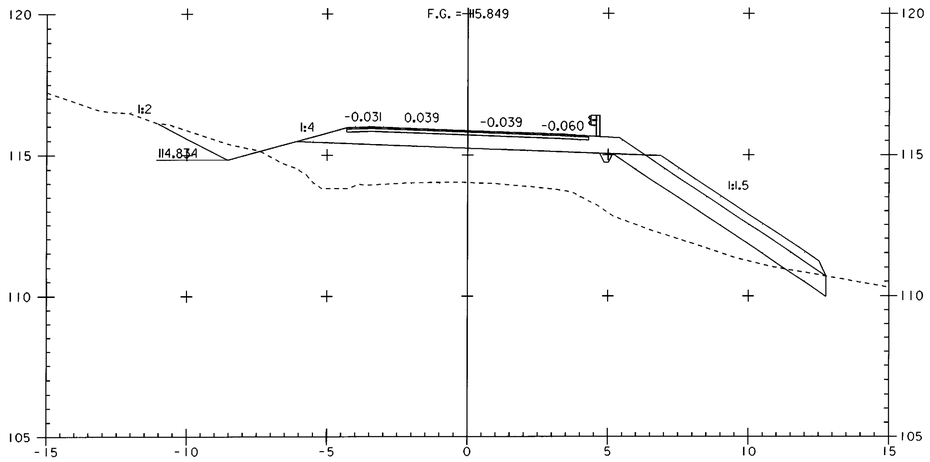

8+070

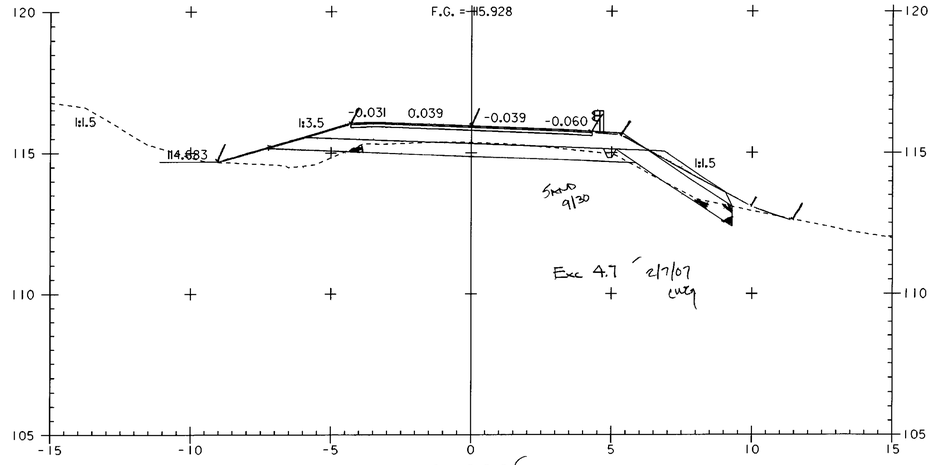

8+080 S

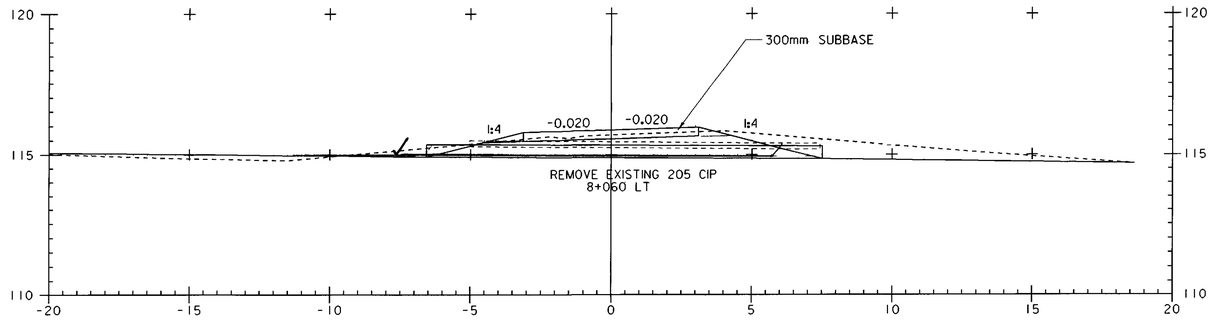

DRIVE AT 8+060 LT
SECTION A - A

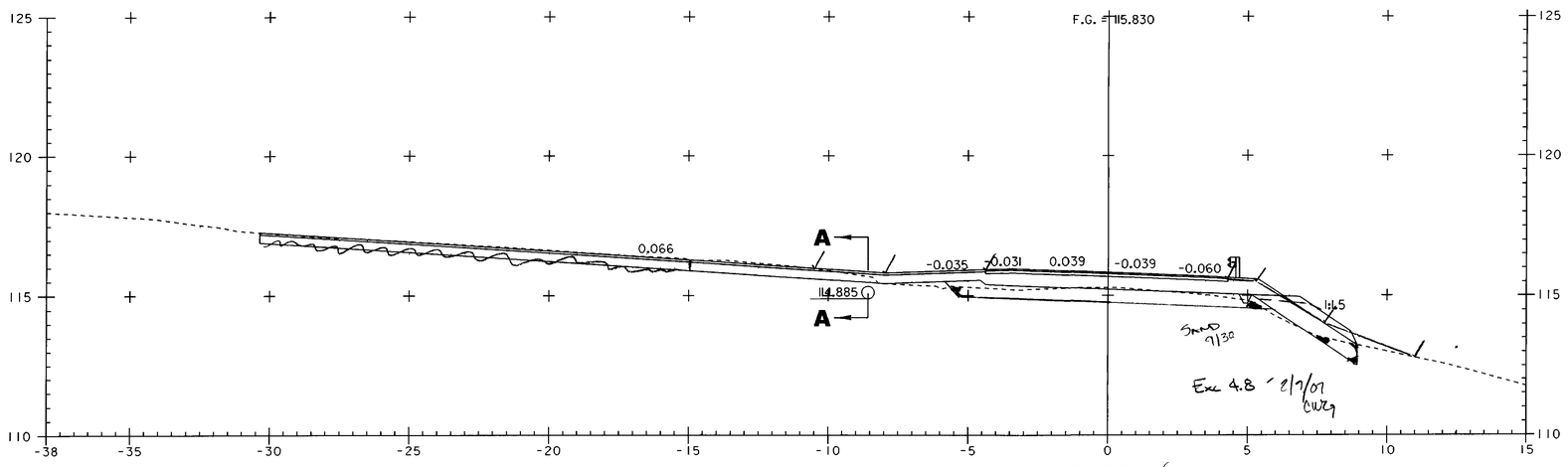

8+060 S

0 2 4 6 8 10
SCALE IN METERS

PROJECT NAME:	HIGHGATE - FRANKLIN
PROJECT NUMBER:	STP RS 0301(1) SA
FILE NAME: ...85c060\design\dc060x10.dgn	PLOT DATE: 09-MAY-2005
PROJECT LEADER: DELLASANTA	DRAWN BY: . SQUAD B
DESIGNED BY: SQUAD B	CHECKED BY: SQUAD B
IPARM FILE NAME: dc060x107.i	SHEET 411 OF 450

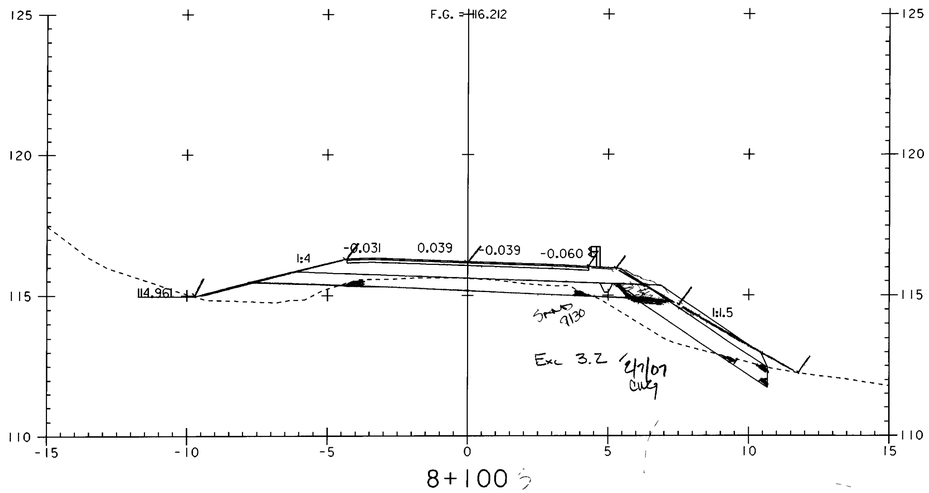

8+100

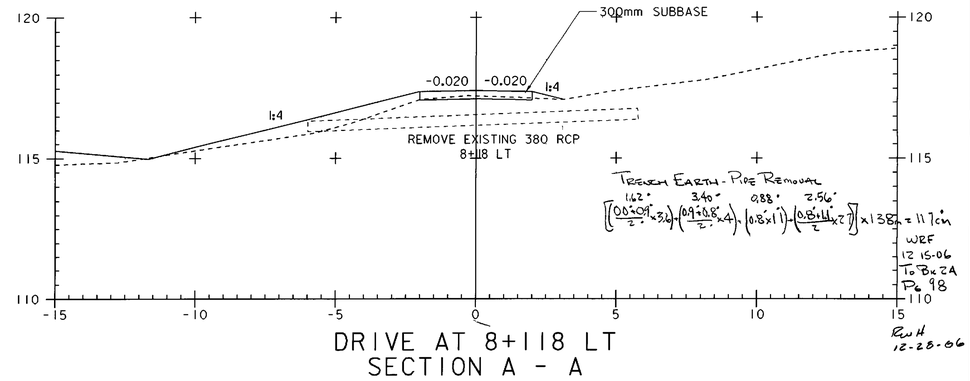

DRIVE AT 8+118 LT
SECTION A - A

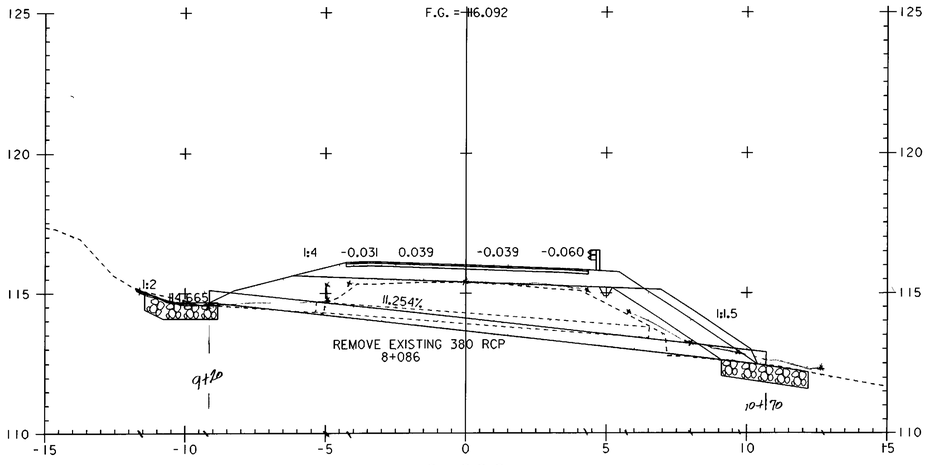

8+086
ASKEW = 86°26'29" RT

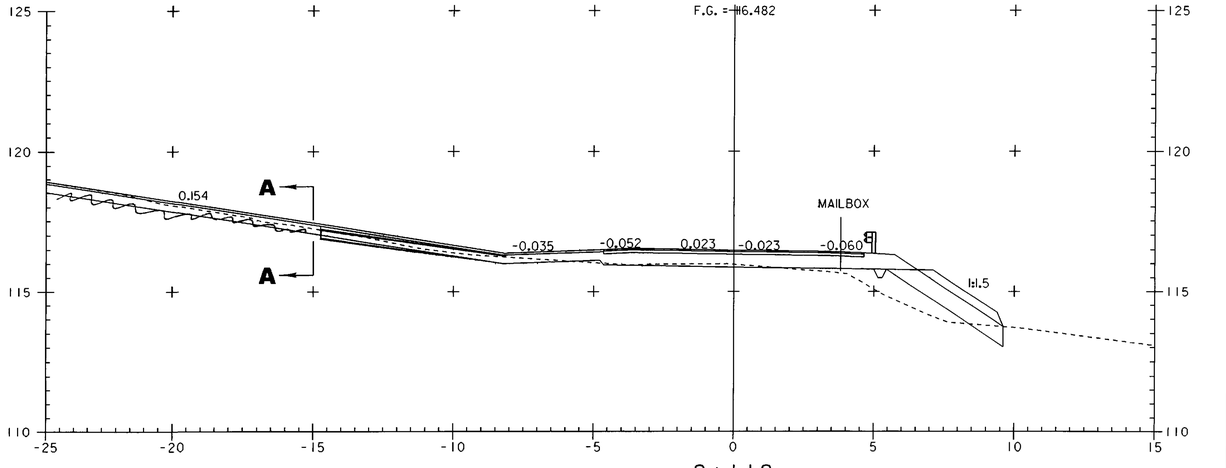

8+118

0 2 4 6 8 10
SCALE IN METERS

PROJECT NAME:	HIGHGATE - FRANKLIN
PROJECT NUMBER:	STP RS 0301(1) SA
FILE NAME: ...85c060\design\dc060x10.dgn	PLOT DATE: 09-MAY-2005
PROJECT LEADER: DELLASANTA	DRAWN BY: SQUAD B
DESIGNED BY: SQUAD B	CHECKED BY: SQUAD B
IPARM FILE NAME: dc060x108.i	SHEET 412 OF 450

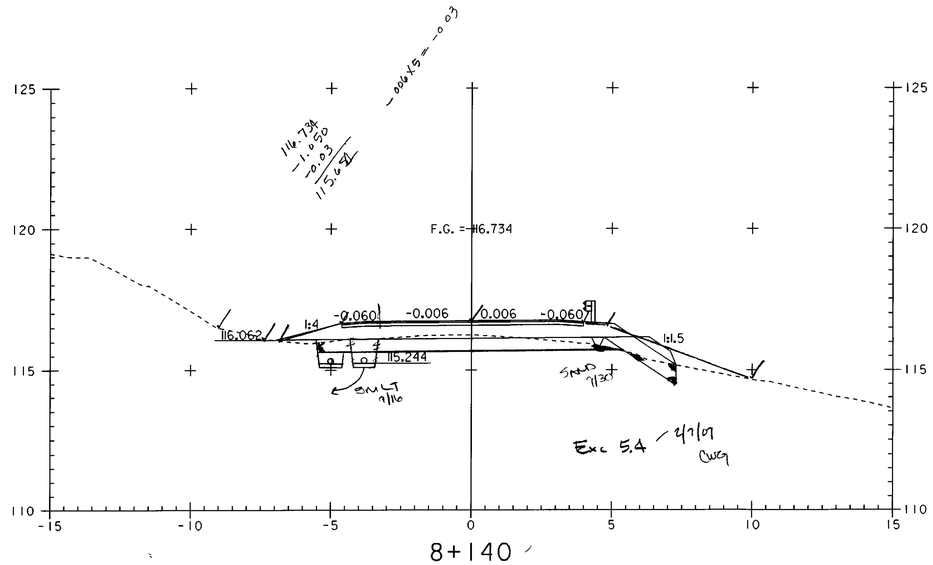

8+140

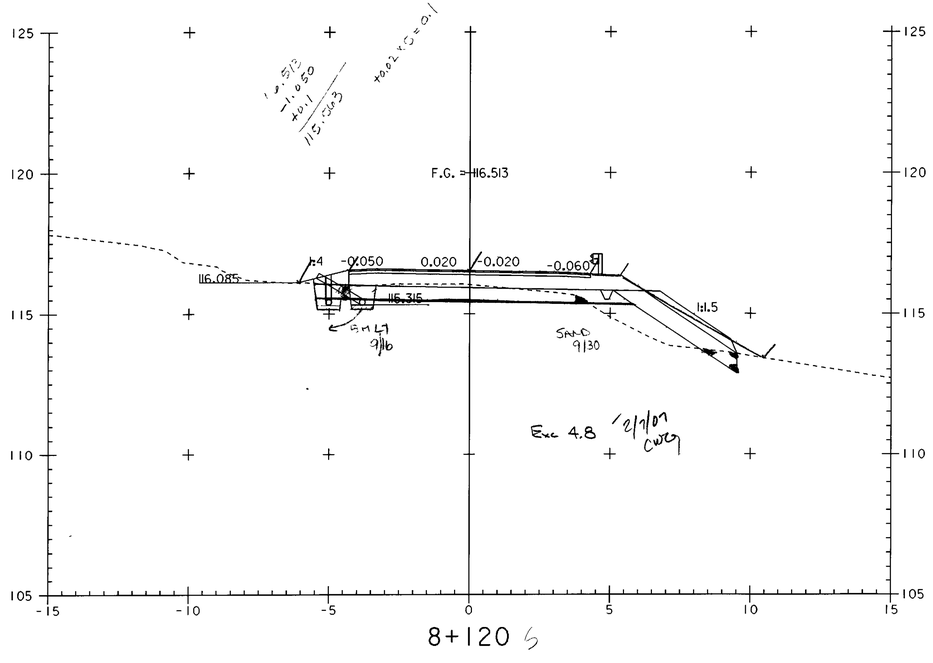

8+120

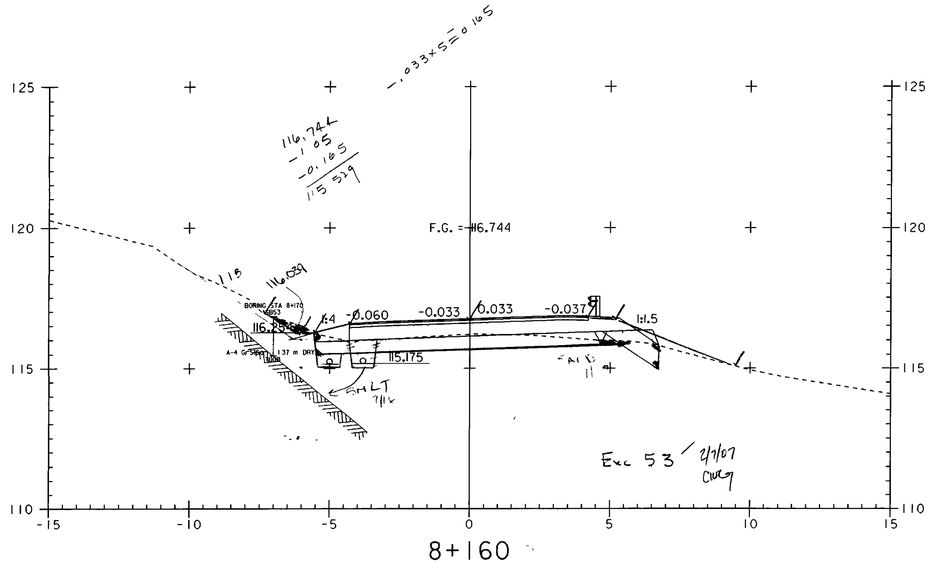

8+160

0 2 4 6 8 10
SCALE IN METERS

PROJECT NAME:	HIGHGATE - FRANKLIN
PROJECT NUMBER:	STP RS 0301(1) SA
FILE NAME: ...85c060\design\dc060x10.dgn	PLOT DATE: 09-MAY-2005
PROJECT LEADER: DELLASANTA	DRAWN BY: SQUAD B
DESIGNED BY: SQUAD B	CHECKED BY: SQUAD B
IPARM FILE NAME: dc060x109.i	SHEET 413 OF 450

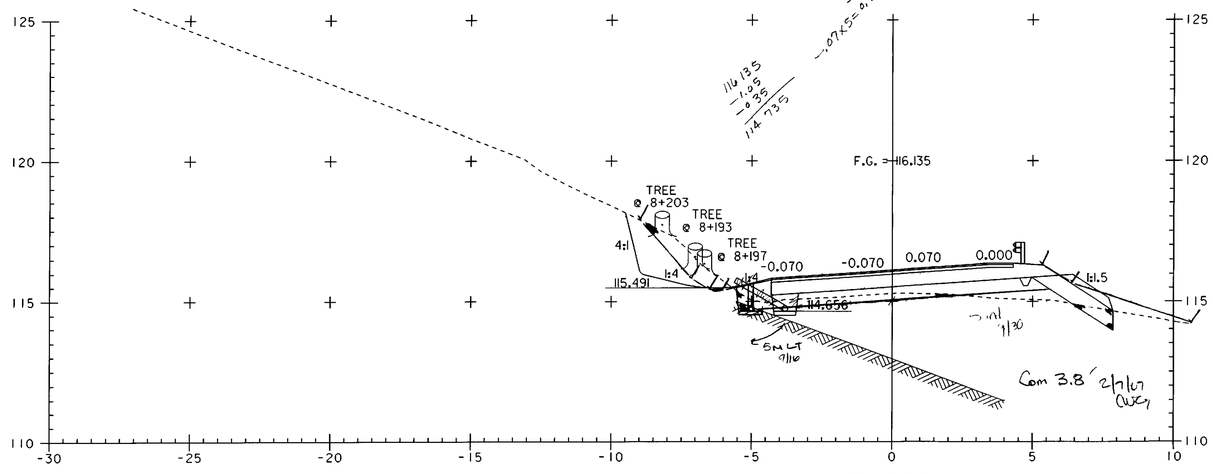

8+200

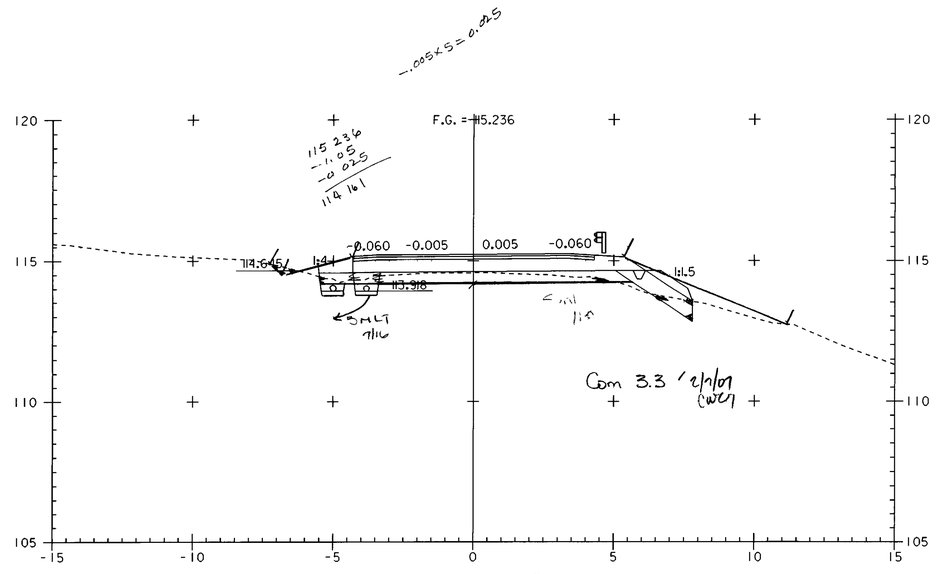

8+240

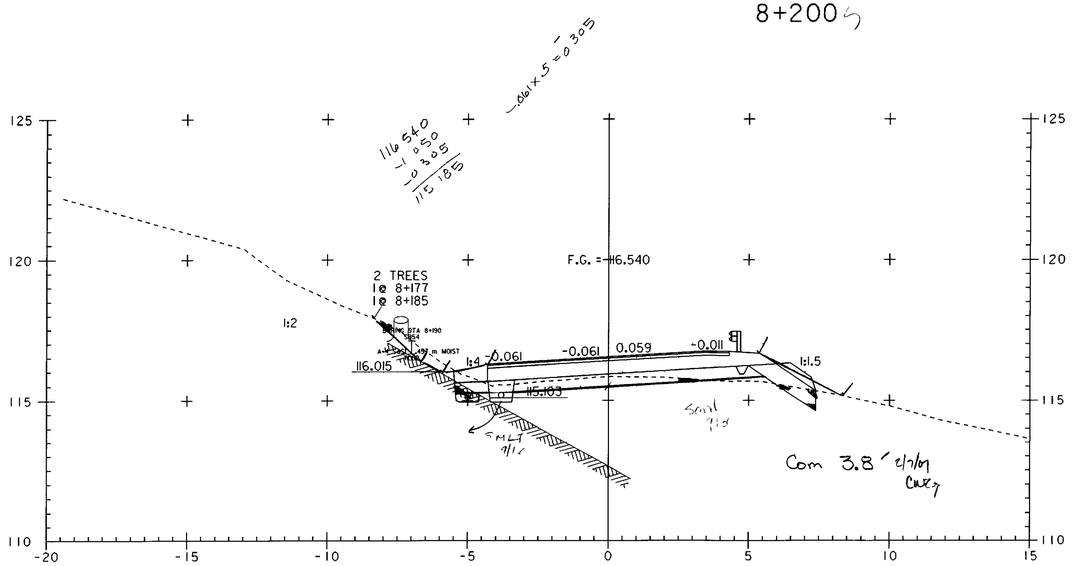

8+180

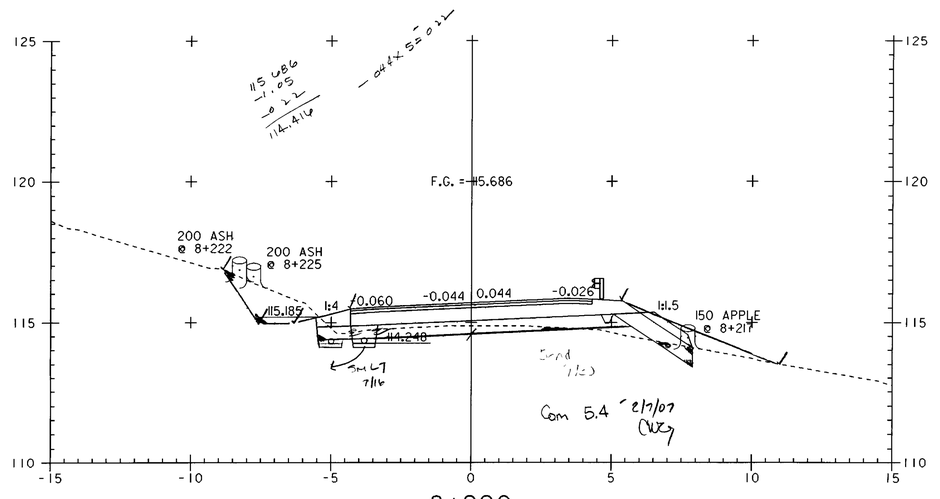

8+220

0 2 4 6 8 10
SCALE IN METERS

PROJECT NAME:	HIGHGATE - FRANKLIN
PROJECT NUMBER:	STP RS 0301(1) SA
FILE NAME: ...85c060\design\dc060x10.dgn	PLOT DATE: 09-MAY-2005
PROJECT LEADER: DELLASANTA	DRAWN BY: SQUAD B
DESIGNED BY: SQUAD B	CHECKED BY: SQUAD B
IPARM FILE NAME: dc060x1010.i	SHEET 414 OF 450

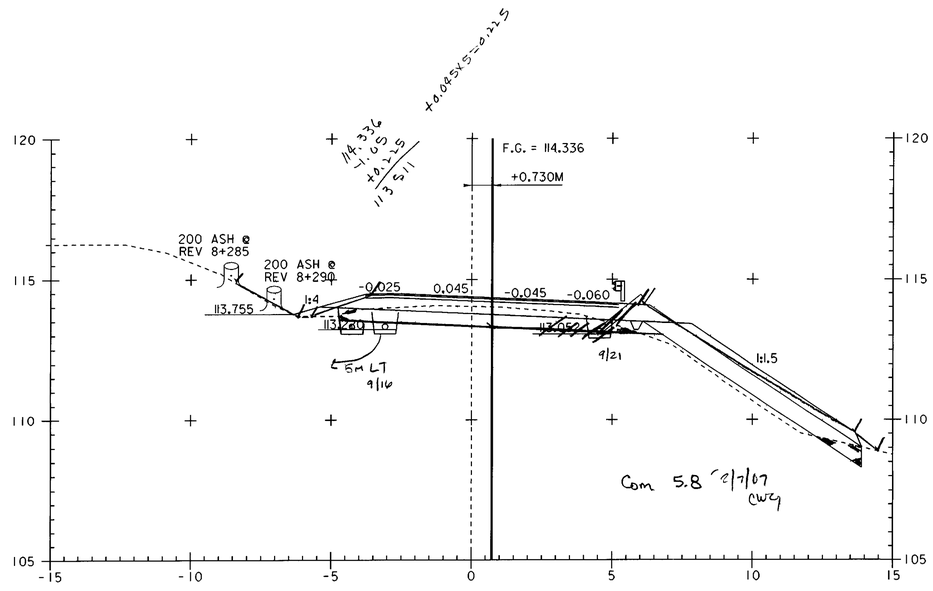

8+280 =
REV 8+280.010

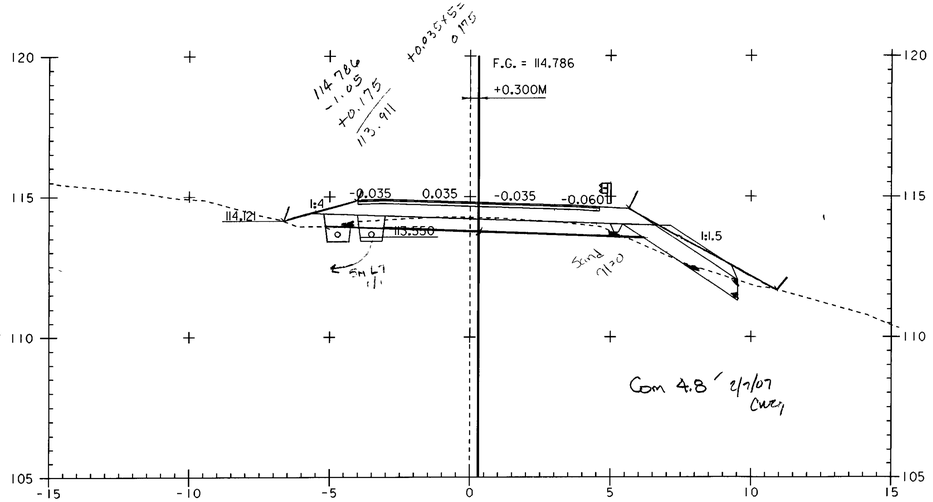

8+260 = 5
REV 8+260.000

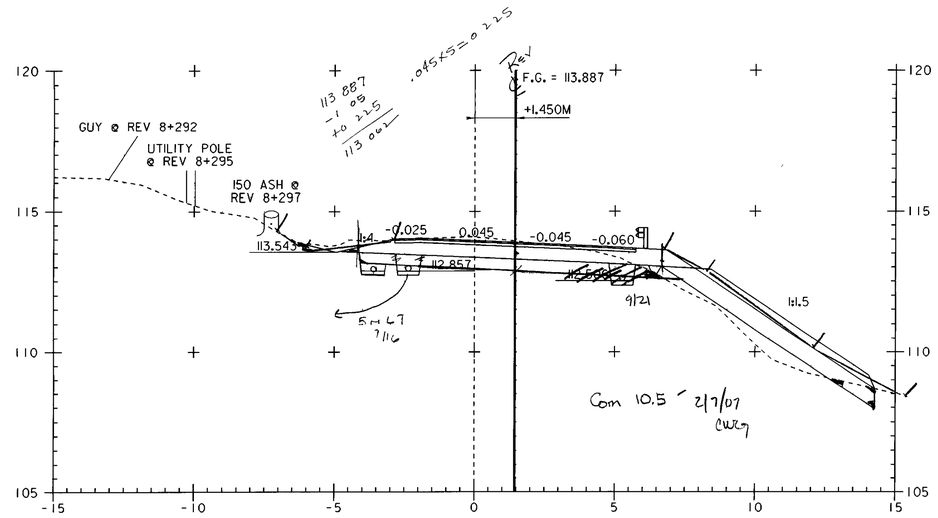

8+300 =
REV 8+299.950

Sta POT 8+254.726 =
REV PC Sta 8+254.730
EQ = -0.004

0 2 4 6 8 10
SCALE IN METERS

PROJECT NAME:	HIGHGATE - FRANKLIN
PROJECT NUMBER:	STP RS 0301(1) SA
FILE NAME: ...85c060\design\dc060x10.dgn	PLOT DATE: 09-MAY-2005
PROJECT LEADER: DELLASANTA	DRAWN BY: SQUAD B
DESIGNED BY: SQUAD B	CHECKED BY: SQUAD B
IPARM FILE NAME: dc060x1011.i	SHEET 415 OF 450

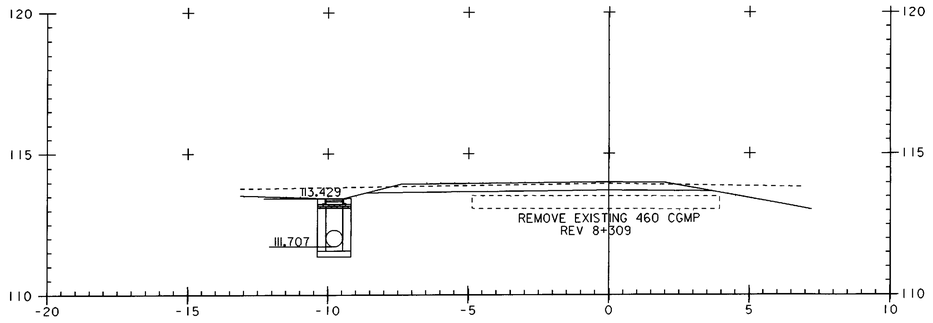

SECTION A - A

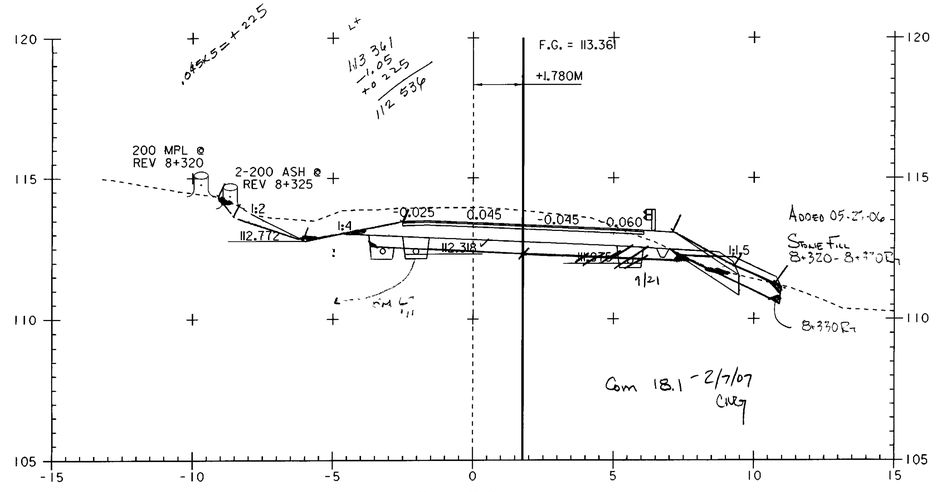

8+320 =
REV 8+319.840

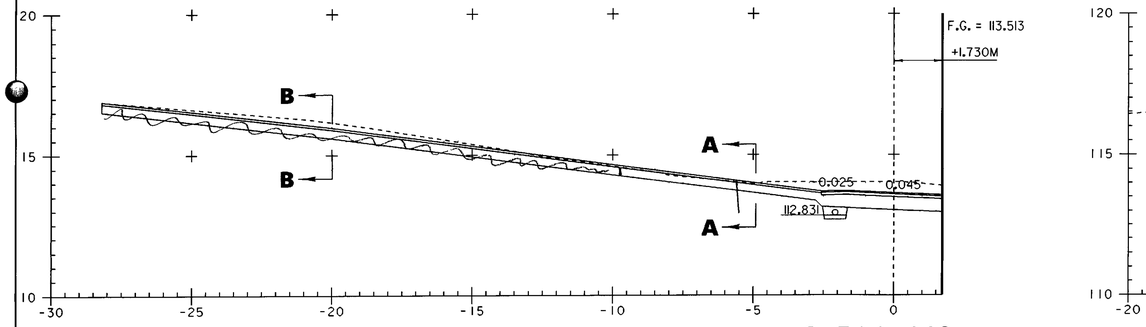

8+314.440 =
REV 8+309.000

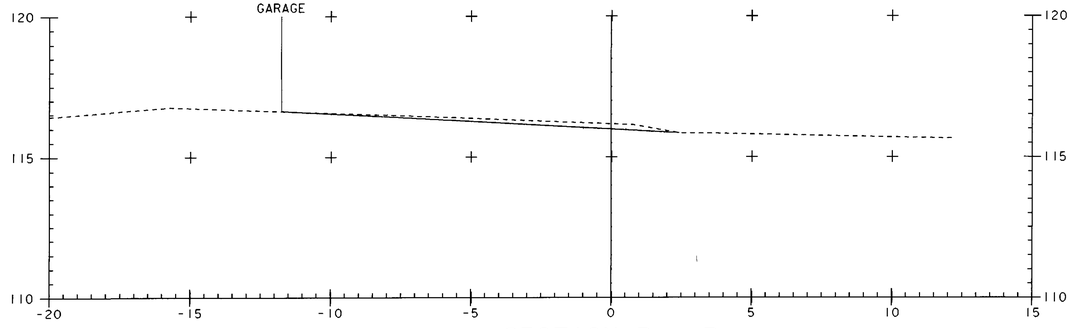

SECTION B - B

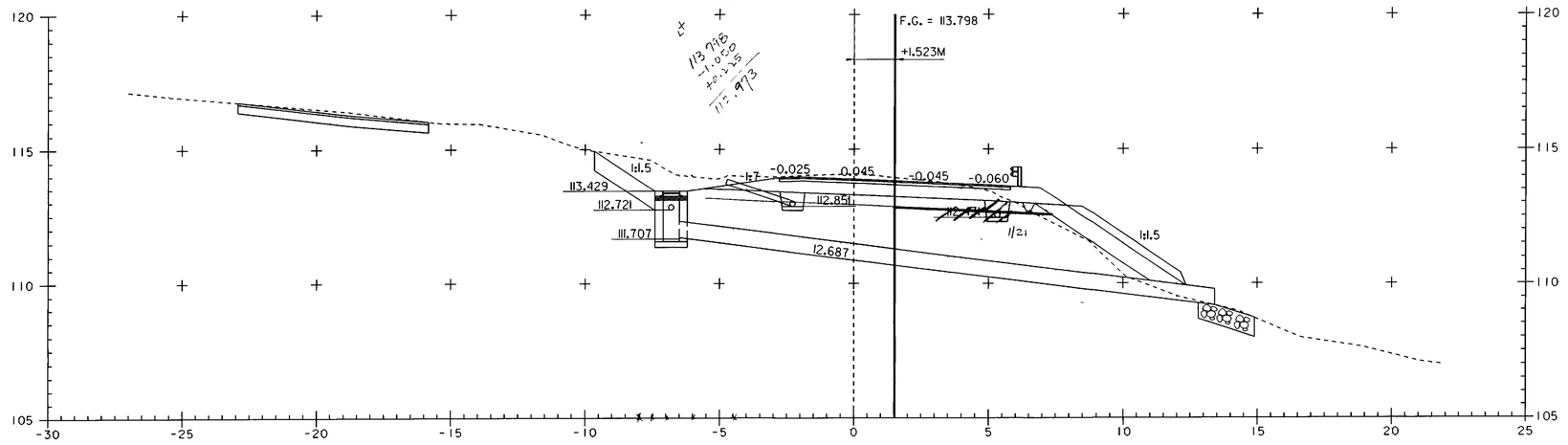

8+303 =
REV 8+303.150

0 2 4 6 8 10
SCALE IN METERS

PROJECT NAME:	HIGHGATE - FRANKLIN
PROJECT NUMBER:	STP RS 0301(1) SA
FILE NAME: ...85c060\design\dc060x10.dgn	PLOT DATE: 09-MAY-2005
PROJECT LEADER: DELLASANTA	DRAWN BY: SQUAD B
DESIGNED BY: SQUAD B	CHECKED BY: SQUAD B
IPARM FILE NAME: dc060x1012.i	SHEET 416 OF 450

Metric

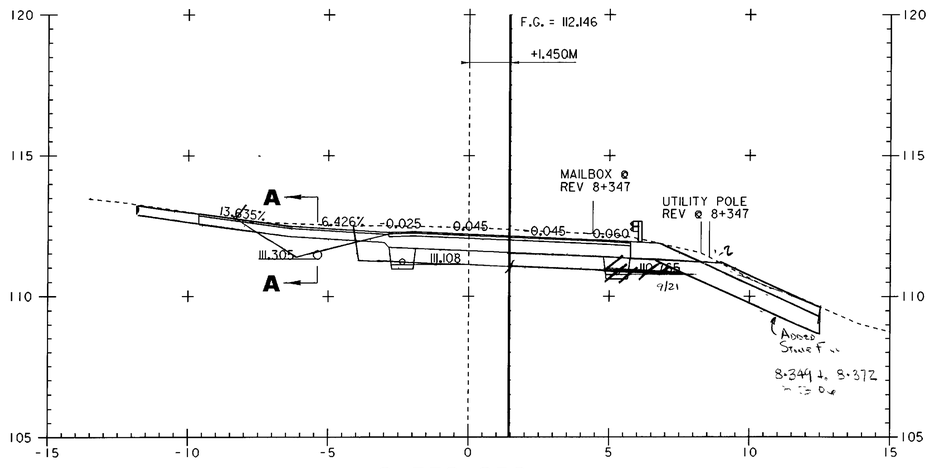

8+352.850 =
REV 8+352.570 LT

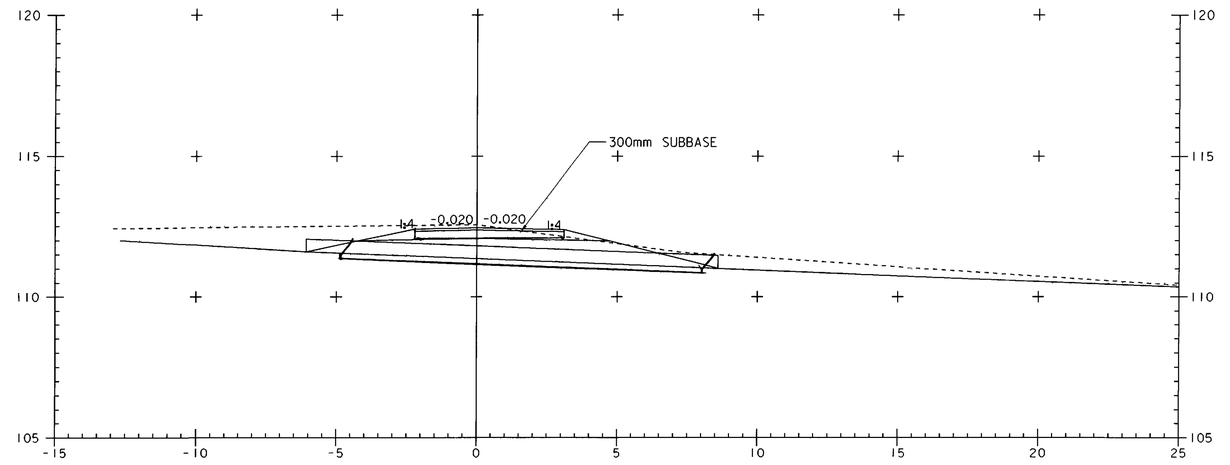

SECTION A - A
REV 8+352.570 LT

112 623

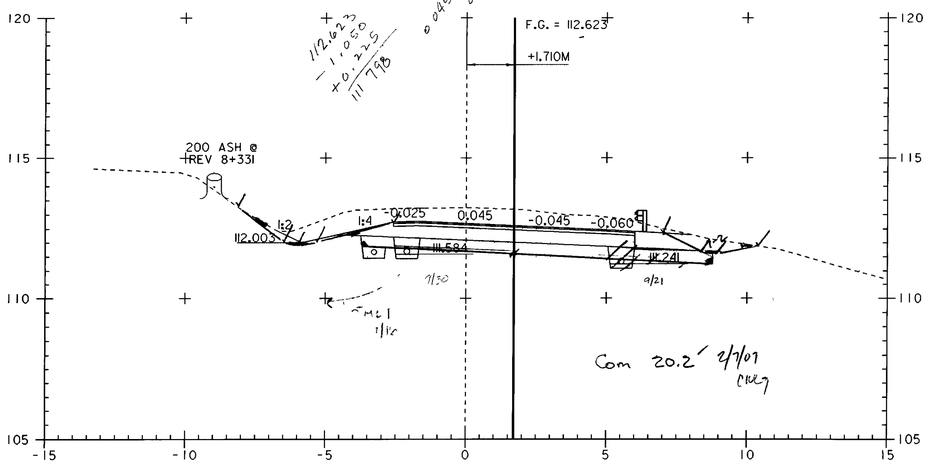

8+340 =
REV 8+339.720

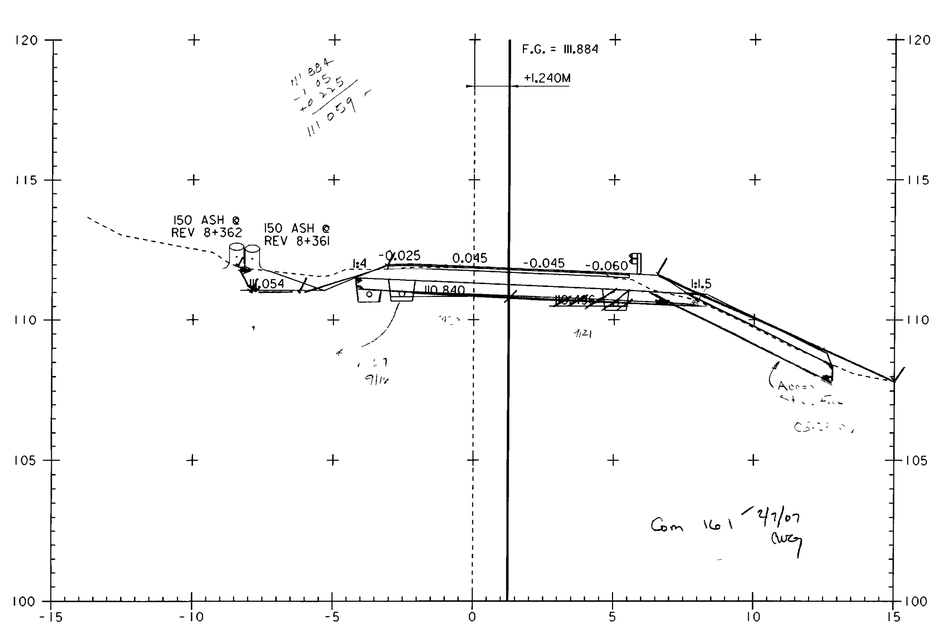

8+360 =
REV 8+359.630

0 2 4 6 8 10
SCALE IN METERS

PROJECT NAME:	HIGHGATE - FRANKLIN
PROJECT NUMBER:	STP RS 0301(1) SA
FILE NAME: ...85c060\design\dc060x10.dgn	PLOT DATE: 09-MAY-2005
PROJECT LEADER: DELLASANTA	DRAWN BY: SQUAD B
DESIGNED BY: SQUAD B	CHECKED BY: SQUAD B
IPARM FILE NAME: dc060x1013.i	SHEET 417 OF 450

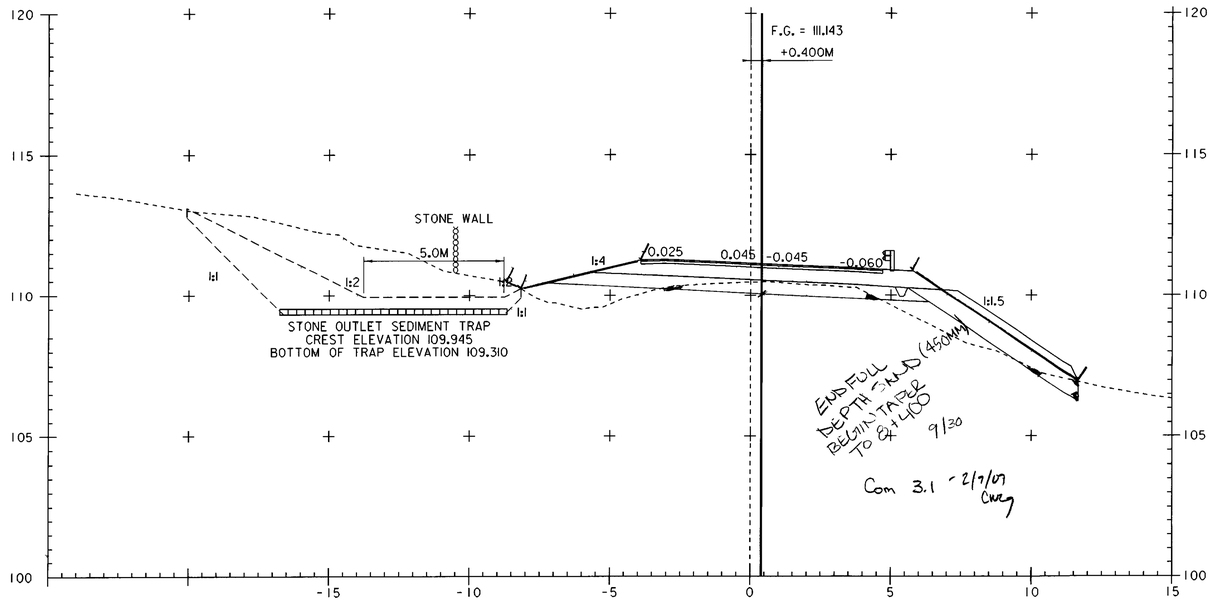

8+380 =
REV 8+379.590

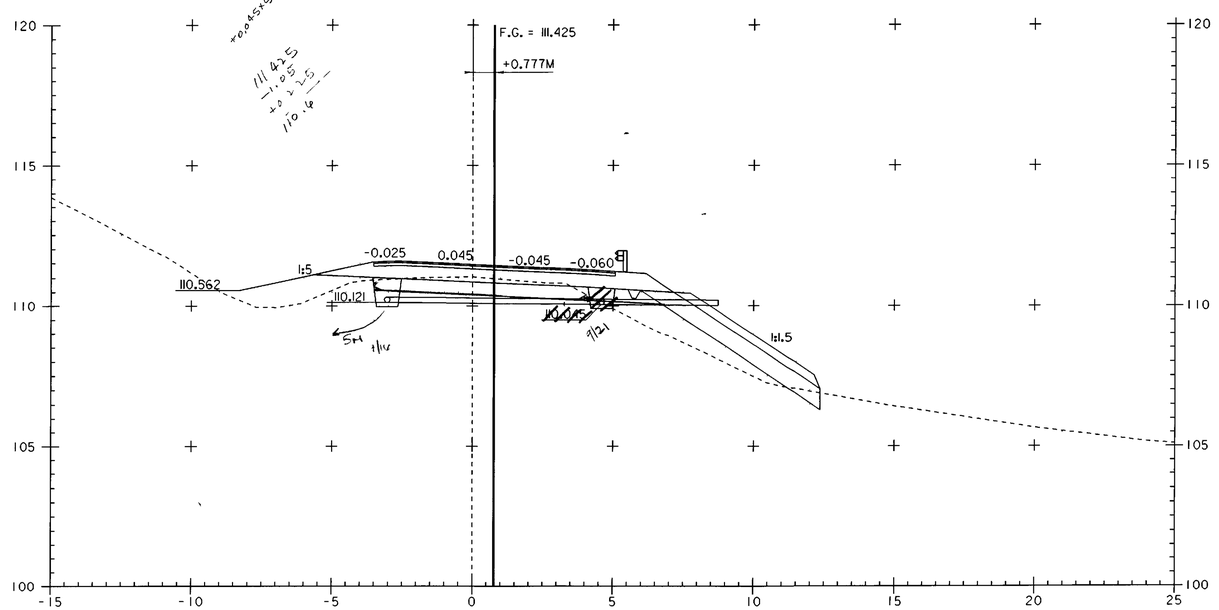

8+372.000 =
REV 8+371.600

0 2 4 6 8 10
SCALE IN METERS

PROJECT NAME: HIGHGATE - FRANKLIN	
PROJECT NUMBER: STP RS 0301(1) SA	
FILE NAME: ...85c060\design\dc060x10.dgn	PLOT DATE: 09-MAY-2005
PROJECT LEADER: DELLASANTA	DRAWN BY: SQUAD B
DESIGNED BY: SQUAD B	CHECKED BY: SQUAD B
IPARM FILE NAME: dc060x1014.i	SHEET 418 OF 450

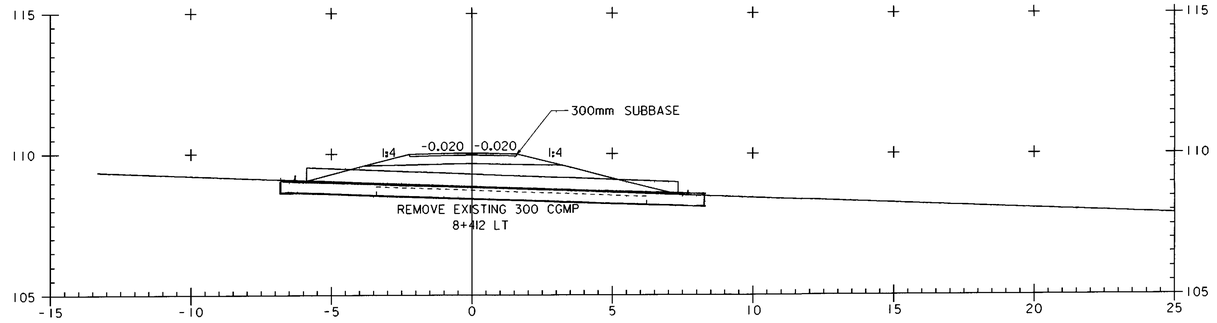

SECTION A - A
8+412 LT

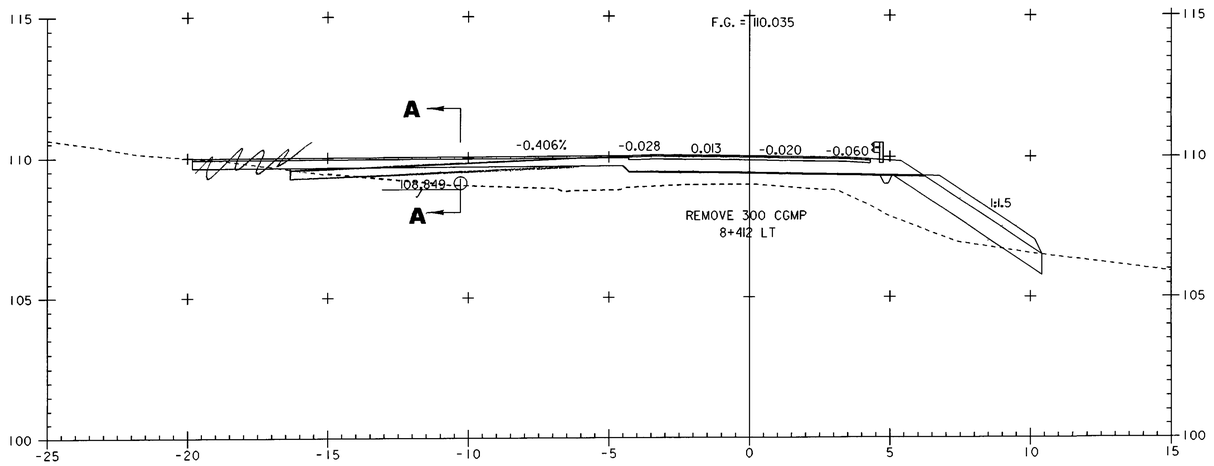

8+412 LT

STA 8+411.860 BEGIN TAPER

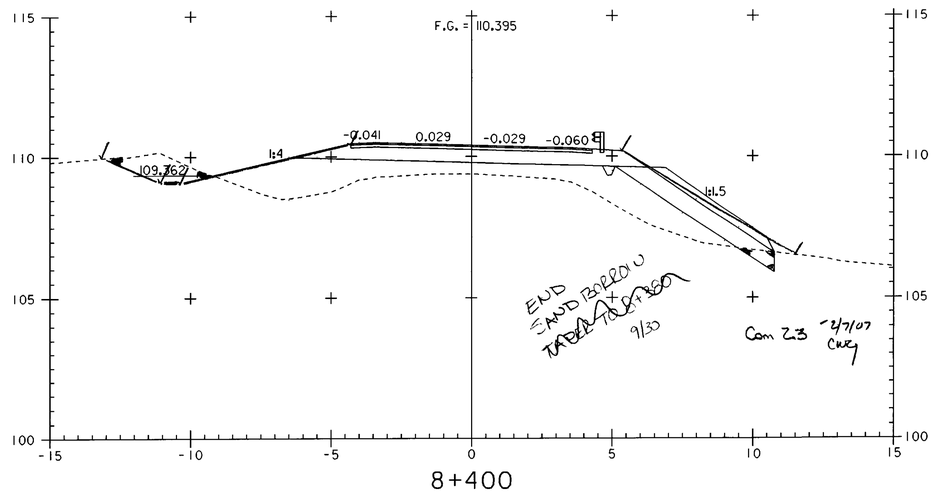

8+400

REV PT Sta 8+398.003 =
STA 8+398.400
EQ = +0.397

0 2 4 6 8 10
SCALE IN METERS

PROJECT NAME:	HIGHGATE - FRANKLIN
PROJECT NUMBER:	STP RS 0301(1) SA
FILE NAME: ...85c060\design\dc060x10.dgn	PLOT DATE: 09-MAY-2005
PROJECT LEADER: DELLASANTA	DRAWN BY: SQUAD B
DESIGNED BY: SQUAD B	CHECKED BY: SQUAD B
IPARM FILE NAME: dc060x1015.1	SHEET 419 OF 450

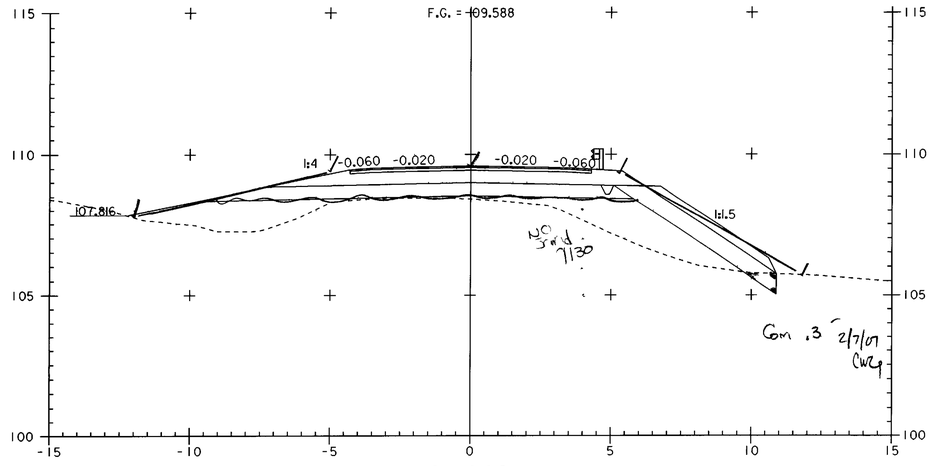

8+440

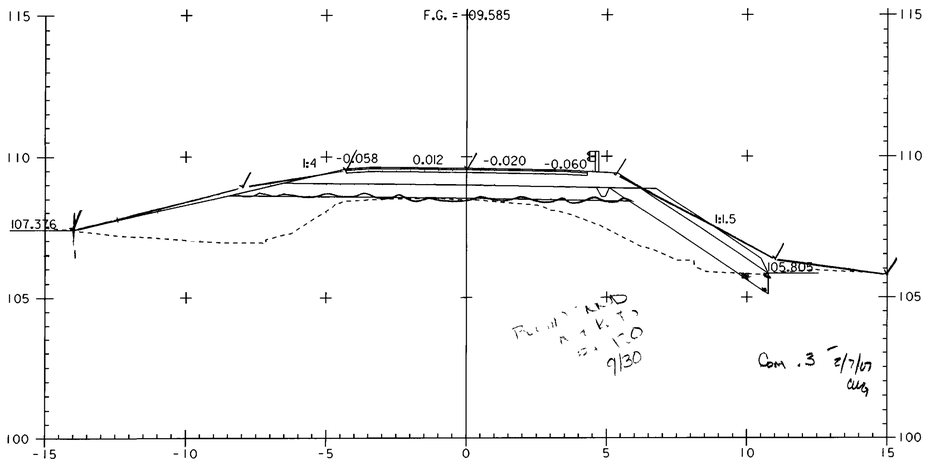

8+460

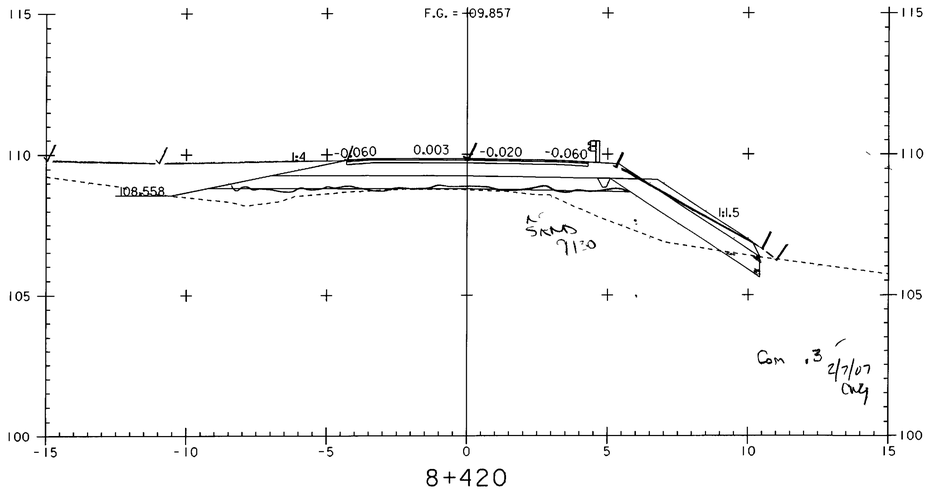

8+420

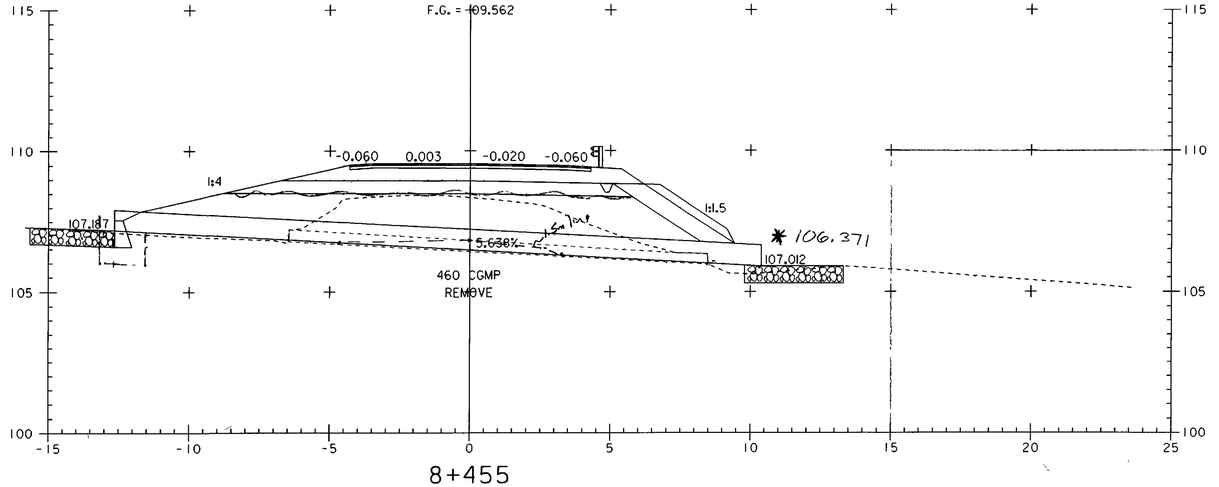

8+455

STA 8+413.800 END TAPER BEGIN FULL DEPTH SAND (450MM)

0 2 4 6 8 10

SCALE IN METERS

PROJECT NAME:	HIGHGATE - FRANKLIN
PROJECT NUMBER:	STP RS 0301(1) SA
FILE NAME: ...85c060\design\dc060x10.dgn	PLOT DATE: 09-MAY-2005
PROJECT LEADER: DELLASANTA	DRAWN BY: SQUAD B
DESIGNED BY: SQUAD B	CHECKED BY: SQUAD B
IPARM FILE NAME: dc060x1016.i	SHEET 420 OF 450

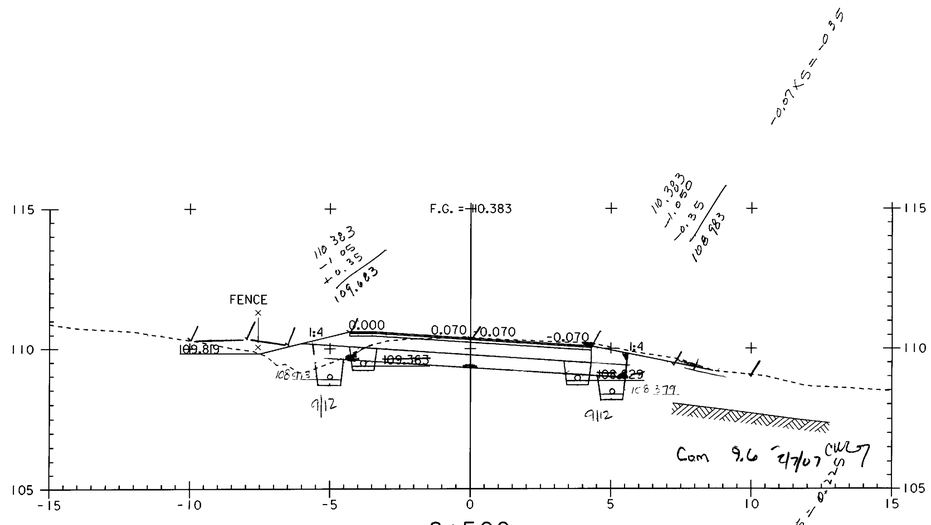

8+500

STA 8+460.220 END TAPER

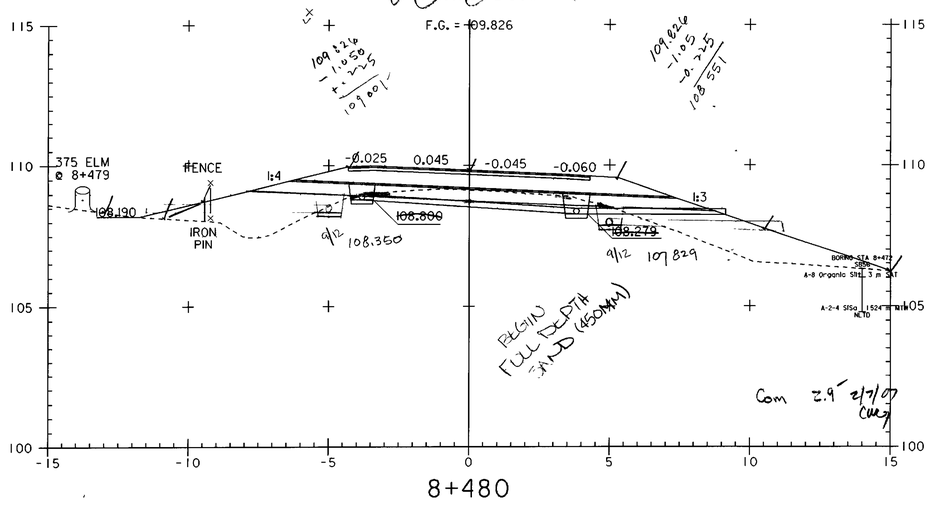

8+480

STA 8+478.100 END FULL DEPTH SAND (450MM) BEGIN TAPER

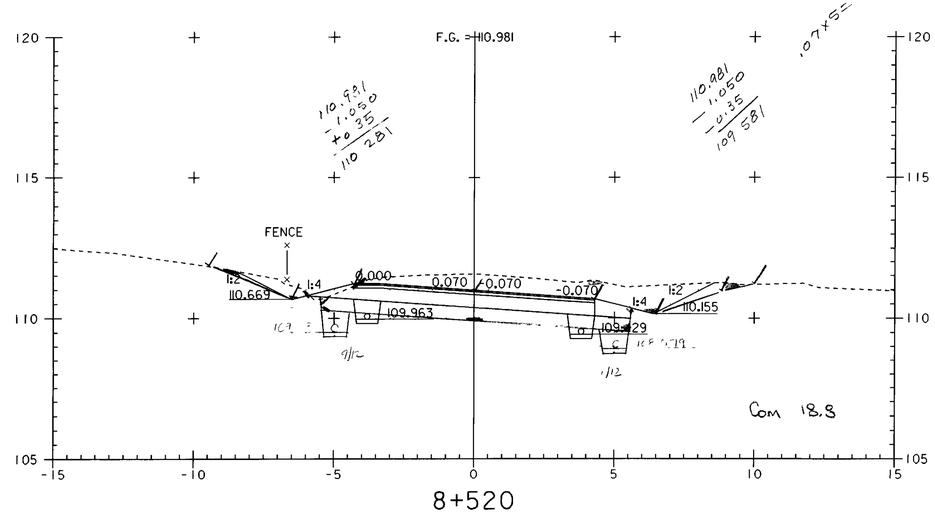

8+520

0 2 4 6 8 10
SCALE IN METERS

PROJECT NAME:	HIGHGATE - FRANKLIN
PROJECT NUMBER:	STP RS 0301(1) SA
FILE NAME: ...85c060\design\dc060x10.dgn	PLOT DATE: 09-MAY-2005
PROJECT LEADER: DELLASANTA	DRAWN BY: SQUAD B
DESIGNED BY: SQUAD B	CHECKED BY: SQUAD B
IPARM FILE NAME: dc060x1017.1	SHEET 421 OF 450

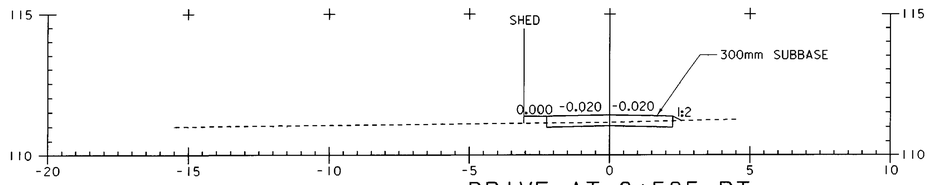

DRIVE AT 8+585 RT
SECTION A - A

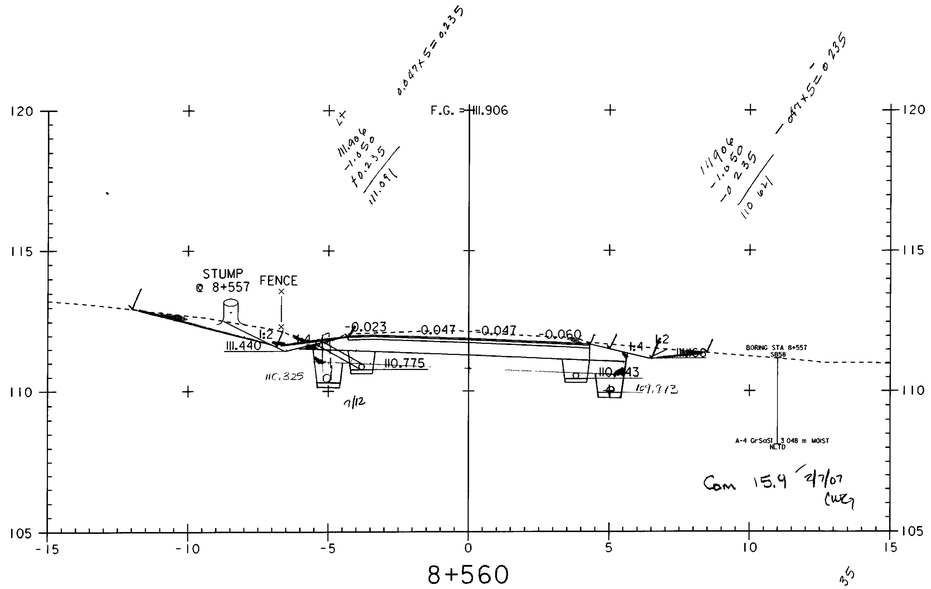

8+560

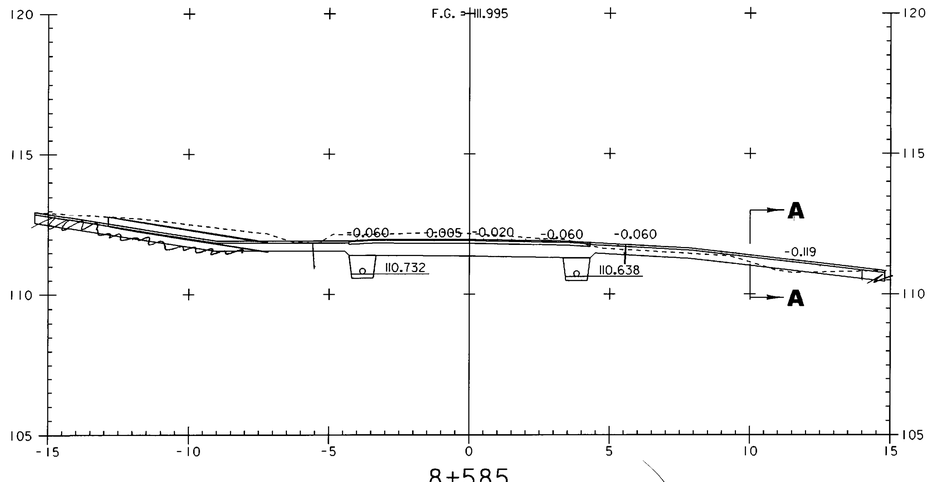

8+585

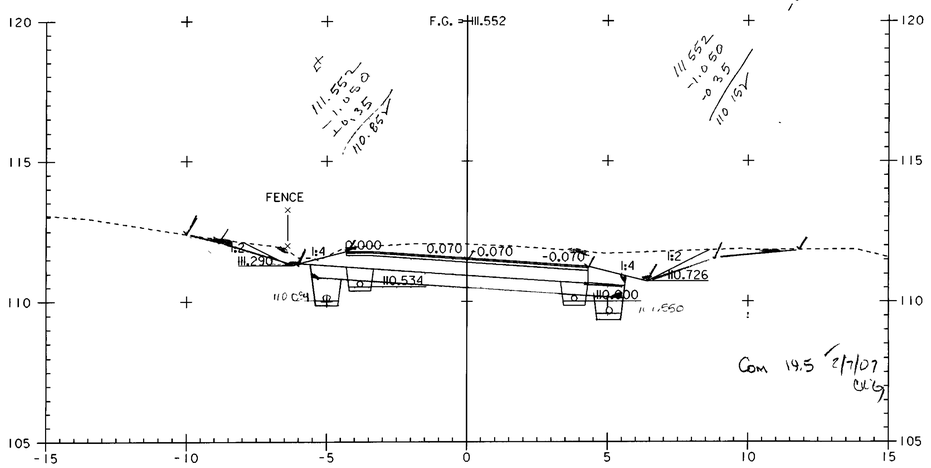

8+540

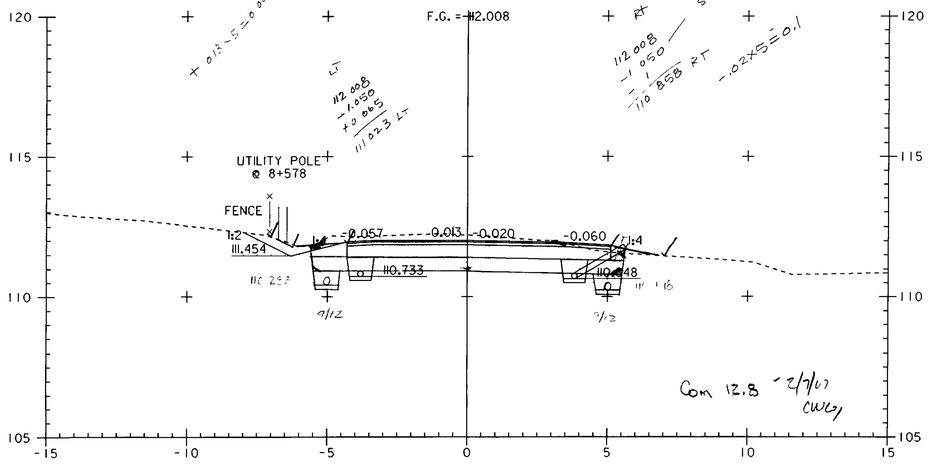

8+580

0 2 4 6 8 10
SCALE IN METERS

PROJECT NAME:	HIGHGATE - FRANKLIN
PROJECT NUMBER:	STP RS 0301(1) SA
FILE NAME: ...85c060\design\dc060x10.dgn	PLOT DATE: 09-MAY-2005
PROJECT LEADER: DELLASANTA	DRAWN BY: SQUAD B
DESIGNED BY: SQUAD B	CHECKED BY: SQUAD B
IPARM FILE NAME: dc060x1018.1	SHEET 422 OF 450

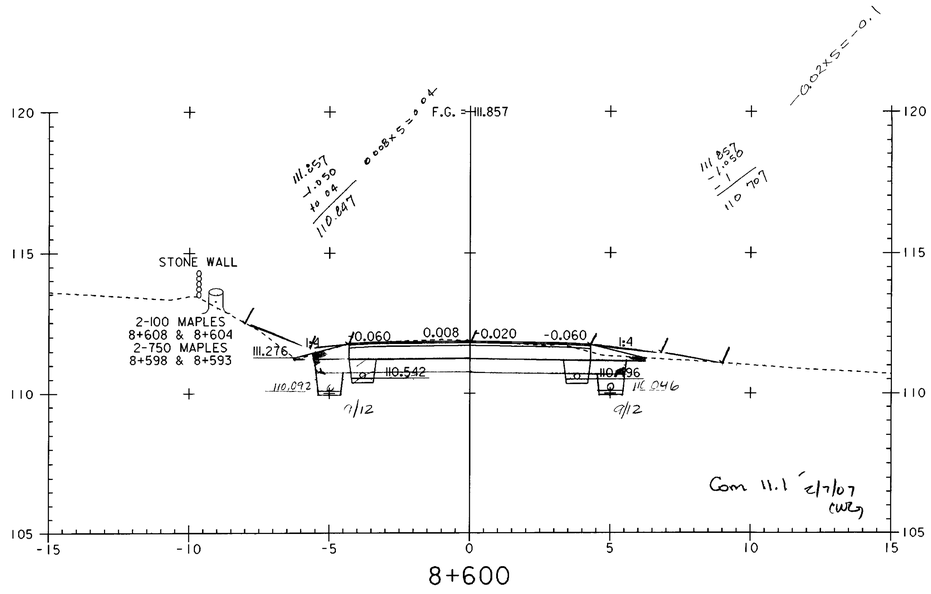

8+600

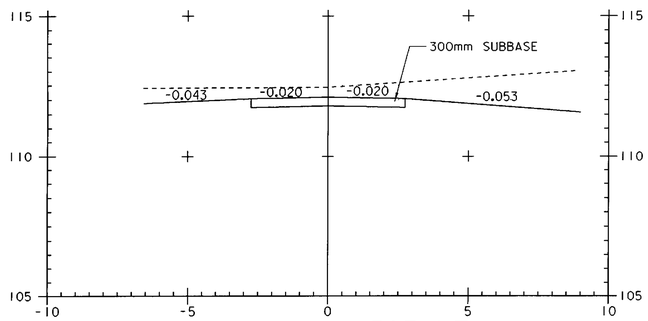

DRIVE AT 8+587 LT
SECTION A - A

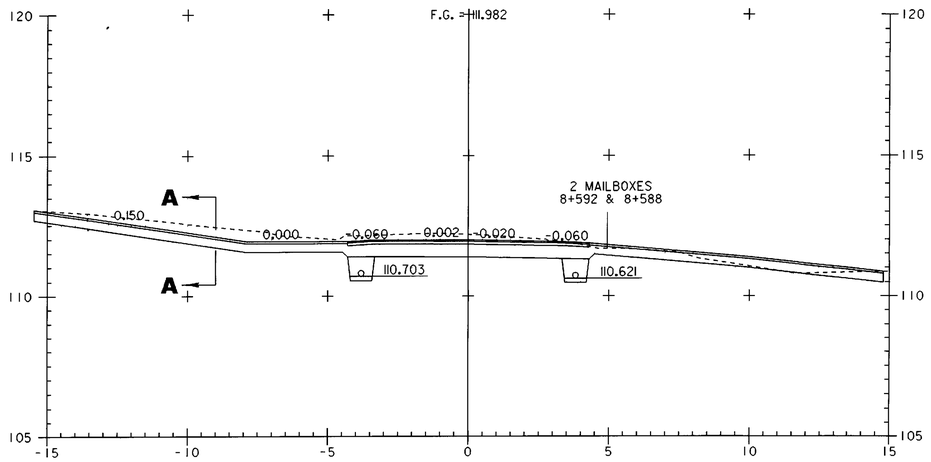

8+587

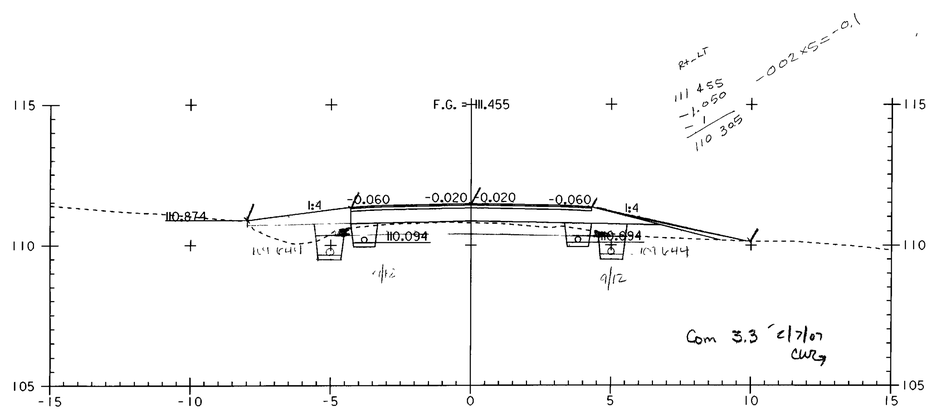

8+620

0 2 4 6 8 10
SCALE IN METERS

PROJECT NAME:	HIGHGATE - FRANKLIN
PROJECT NUMBER:	STP RS 0301(1) SA
FILE NAME: ...85c060\design\dc060x10.dgn	PLOT DATE: 09-MAY-2005
PROJECT LEADER: DELLASANTA	DRAWN BY: SQUAD B
DESIGNED BY: SQUAD B	CHECKED BY: SQUAD B
IPARM FILE NAME: dc060x1019.1	SHEET 423 OF 450

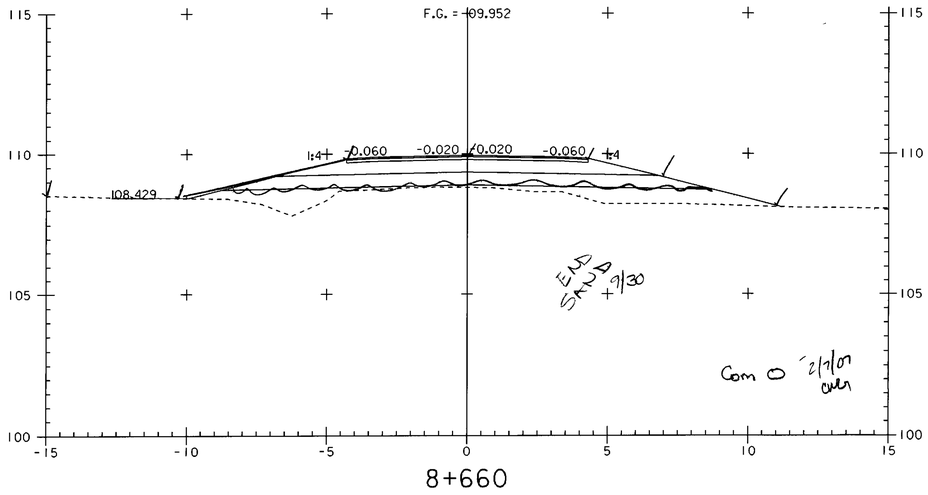

8+660

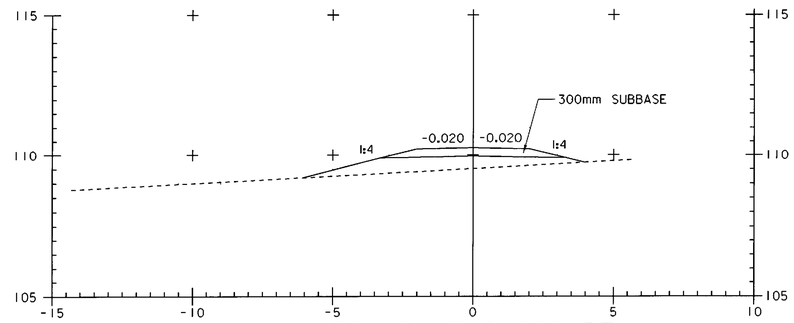

DRIVE AT 8+626 RT
SECTION C - C

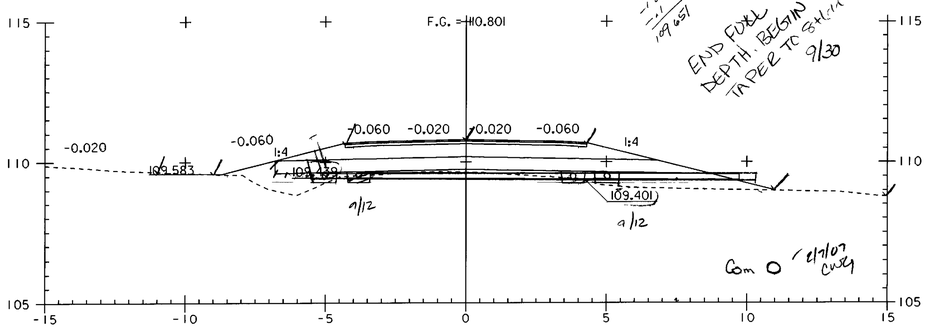

8+640

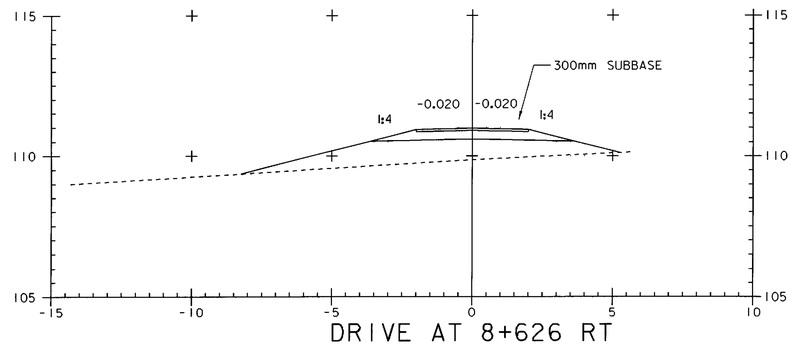

DRIVE AT 8+626 RT
SECTION B - B

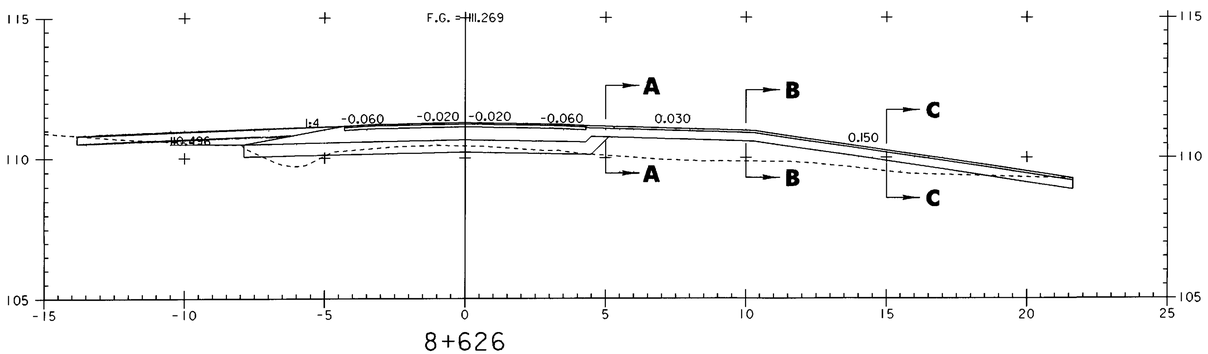

8+626

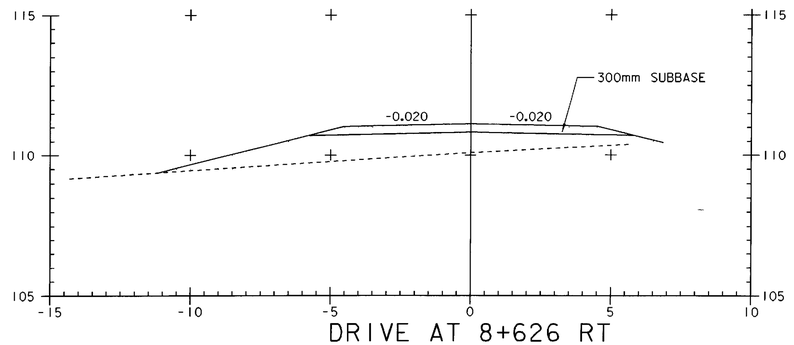

DRIVE AT 8+626 RT
SECTION A - A

STA 8+622.620 END TAPER BEGIN FULL DEPTH SAND (450MM)
STA 8+620.600 BEGIN TAPER

0 2 4 6 8 10
SCALE IN METERS

PROJECT NAME:	HIGHGATE - FRANKLIN
PROJECT NUMBER:	STP RS 0301(1) SA
FILE NAME: ...85c060\design\dc060x10.dgn	PLOT DATE: 09-MAY-2005
PROJECT LEADER: DELLASANTA	DRAWN BY: SQUAD B
DESIGNED BY: SQUAD B	CHECKED BY: SQUAD B
IPARM FILE NAME: dc060x1020.i	SHEET 424 OF 450

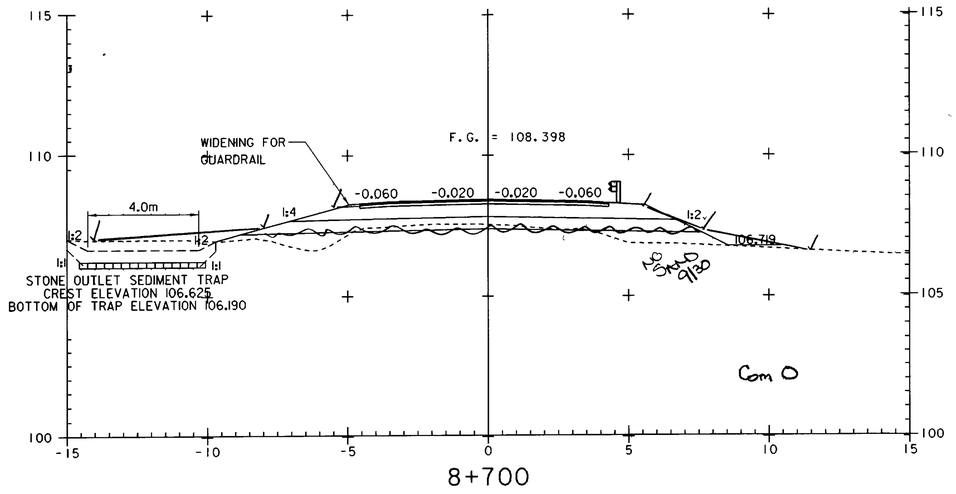

8+700

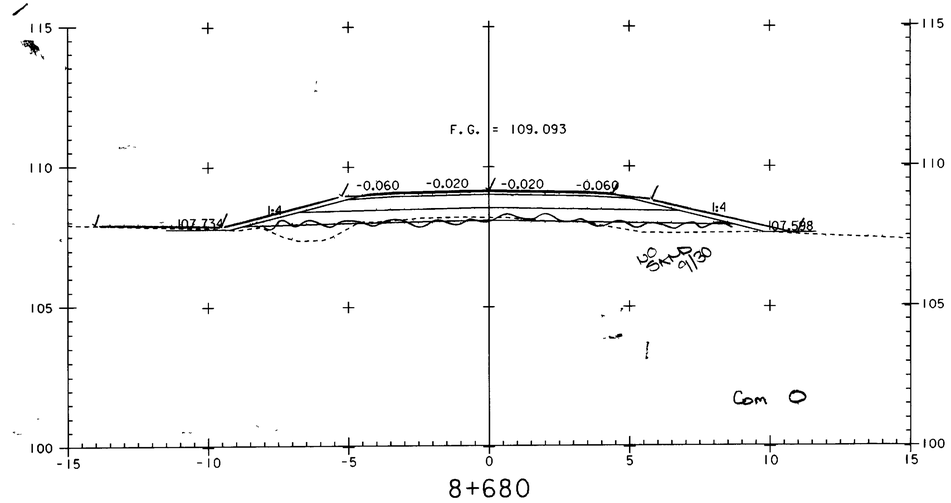

8+680

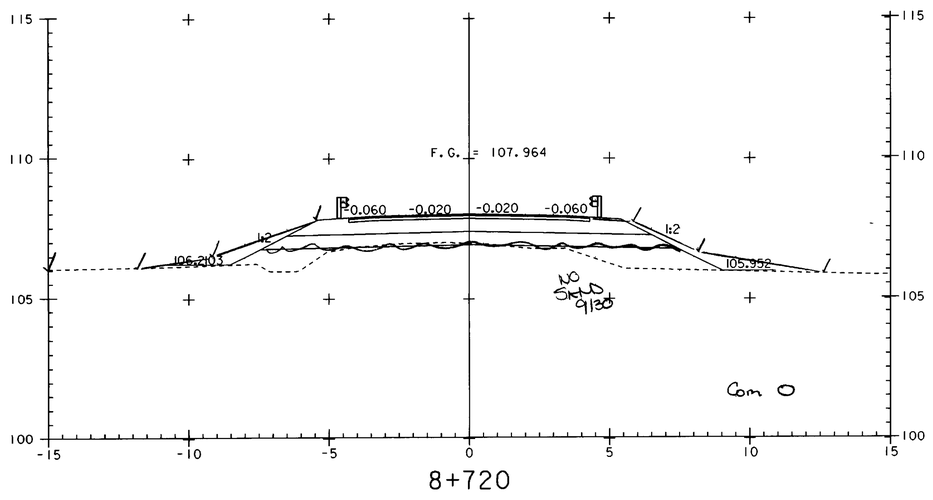

8+720

0 2 4 6 8 10
SCALE IN METERS

PROJECT NAME: HIGHGATE - FRANKLIN	
PROJECT NUMBER: STP RS 0301(1) SA	
FILE NAME: ...85c060\design\dc060xll.dgn	PLOT DATE: 09-MAY-2005
PROJECT LEADER: DELLASANTA	DRAWN BY: SQUAD B
DESIGNED BY: SQUAD B	CHECKED BY: SQUAD B
IPARM FILE NAME: dc060xlll.i	SHEET 425 OF 450

106.1 @ Pipe

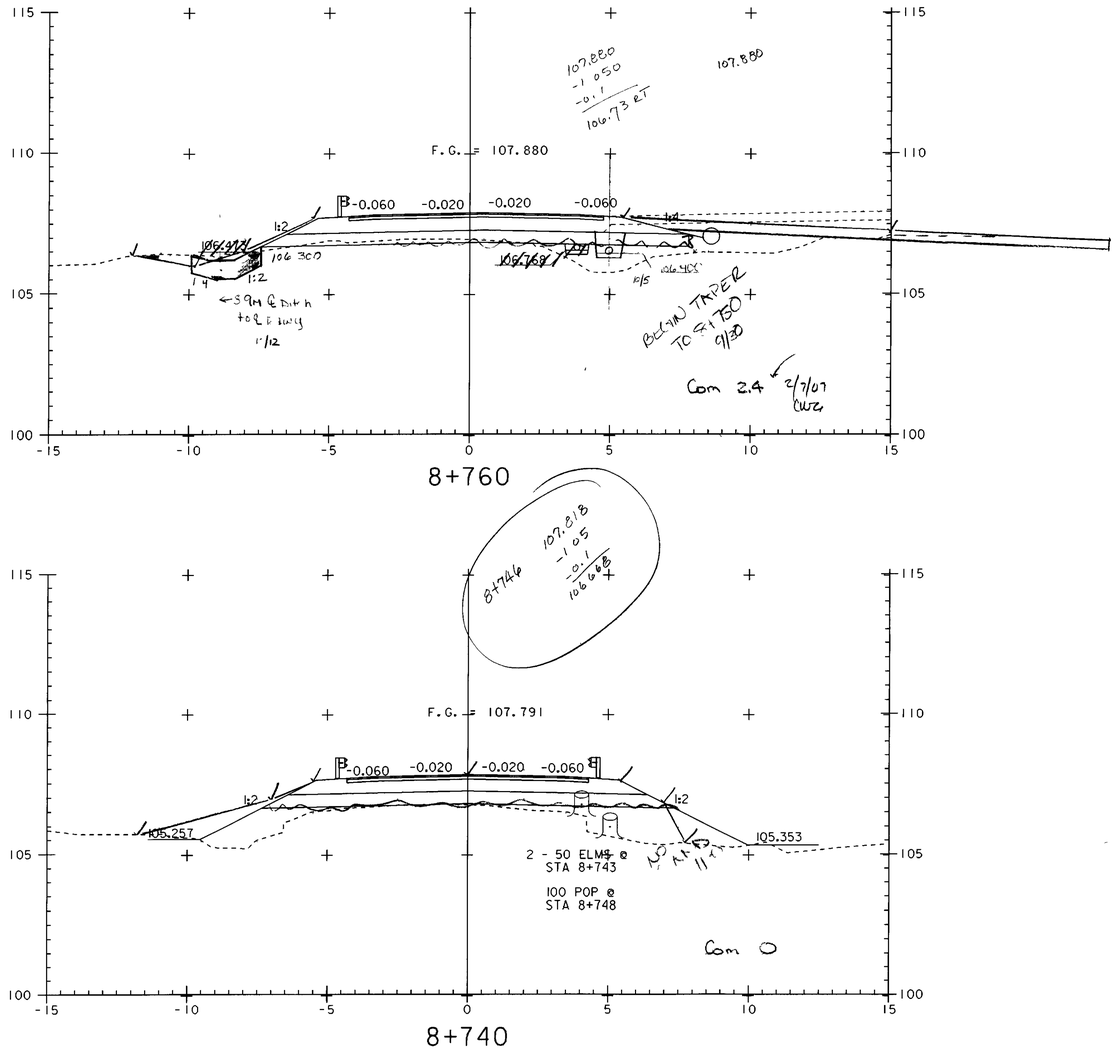

0 2 4 6 8 10
SCALE IN METERS

PROJECT NAME:	HIGHGATE - FRANKLIN
PROJECT NUMBER:	STP RS 0301(1) SA
FILE NAME: ...85c060\design\dc060x11.dgn	PLOT DATE: 09-MAY-2005
PROJECT LEADER: DELLASANTA	DRAWN BY: SQUAD B
DESIGNED BY: SQUAD B	CHECKED BY: SQUAD B
IPARM FILE NAME: dc060x112.i	SHEET 426 OF 450

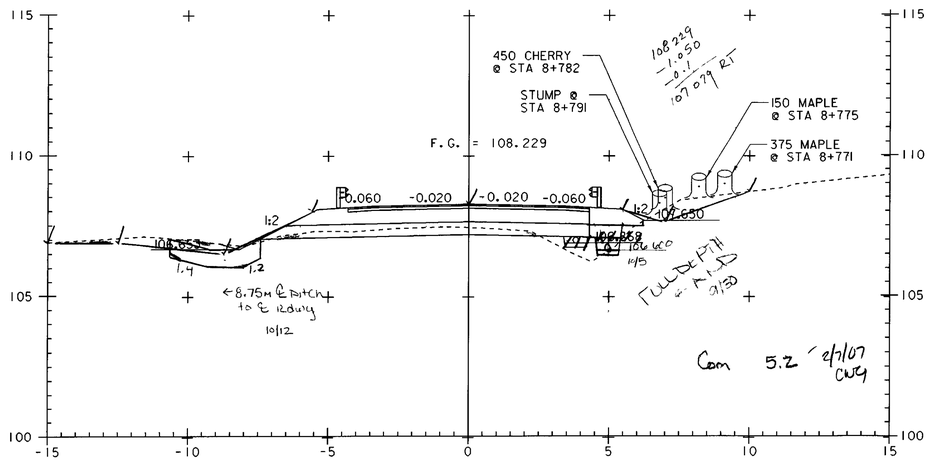

8+780

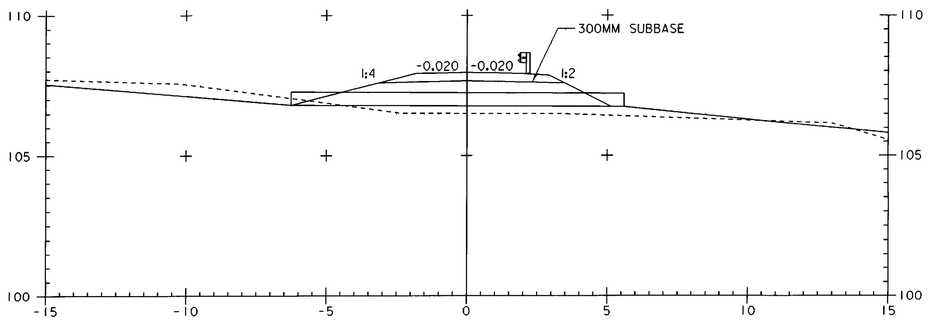

DRIVE @ 8+764 RT
A- A

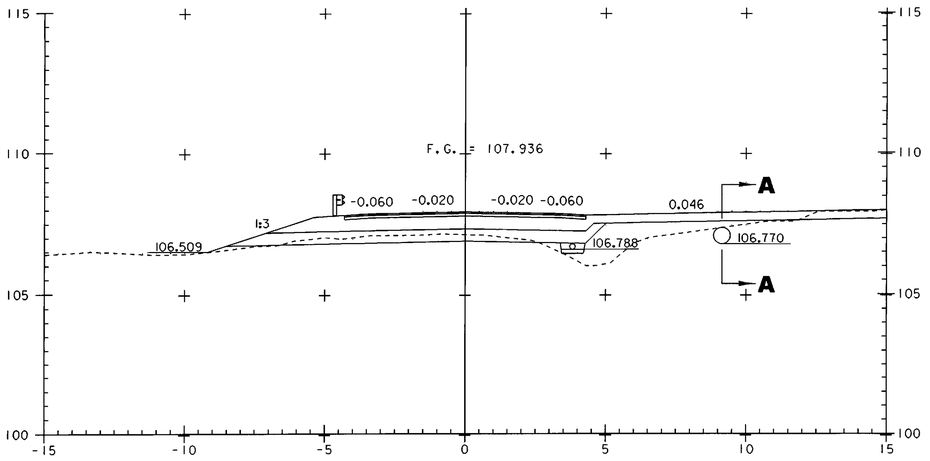

8+764

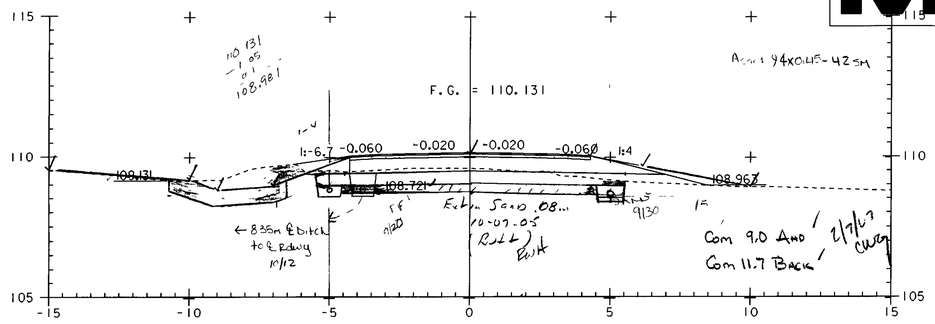

8+840

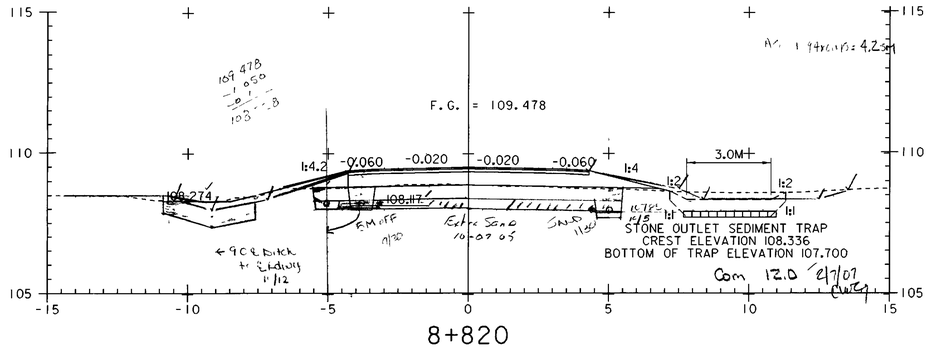

8+820

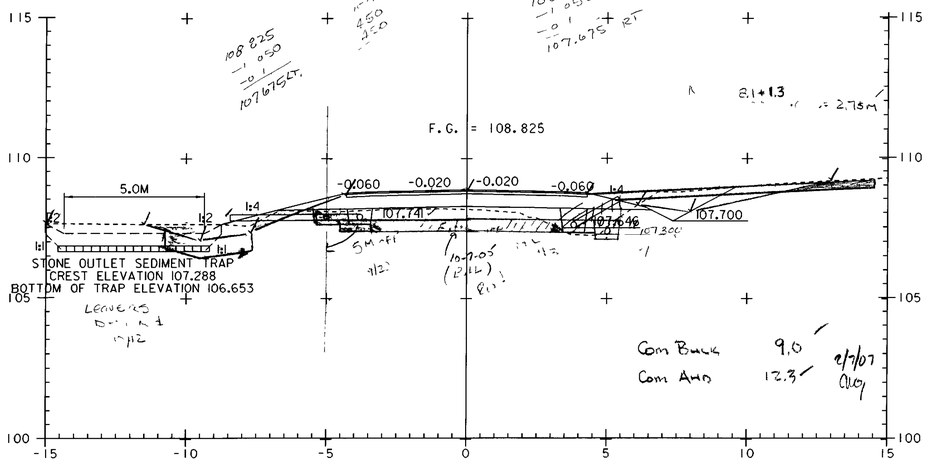

8+800

STA 8+791.100 END TAPER
STA 8+789.040 END FULL DEPTH SAND (450MM) BEGIN TAPER

- 4 finishes

0 2 4 6 8 10
SCALE IN METERS

PROJECT NAME:	HIGHGATE - FRANKLIN
PROJECT NUMBER:	STP RS 0301(1) SA

FILE NAME: ...85c060\design\dc060xll.dgn		PLOT DATE:	09-MAY-2005
PROJECT LEADER:	DELLASANTA	DRAWN BY:	SQUAD B
DESIGNED BY:	SQUAD B	CHECKED BY:	SQUAD B
IPARM FILE NAME:	dc060xll3.i	SHEET	427 OF 450

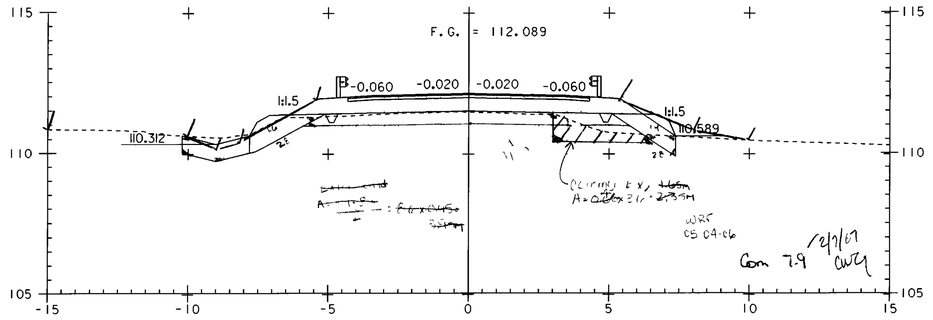

8+900

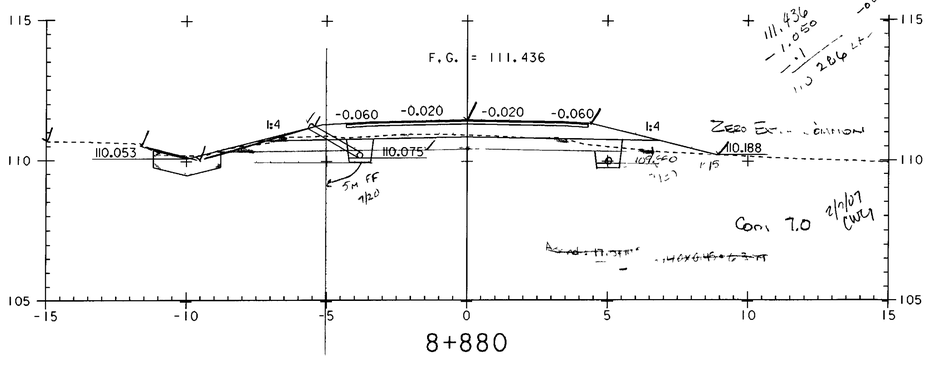

8+880

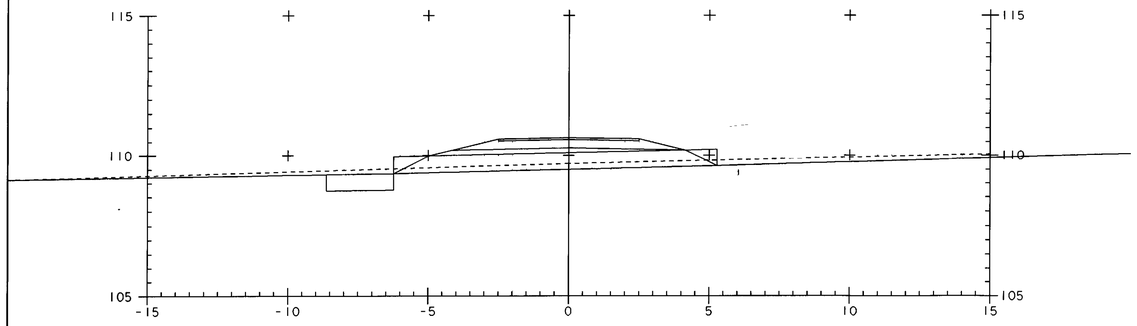

DRIVE @ 8+860 LT
A - A

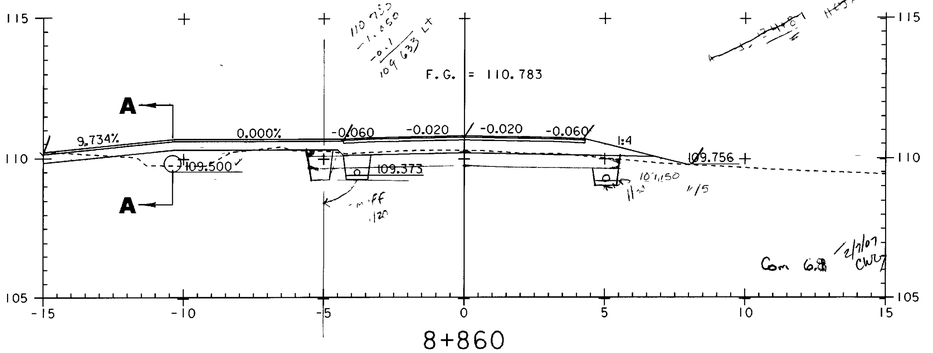

8+860

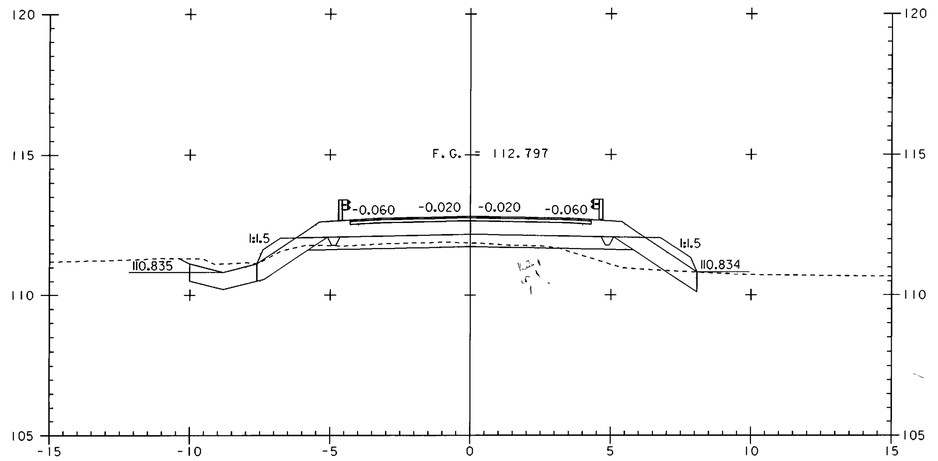

8+922

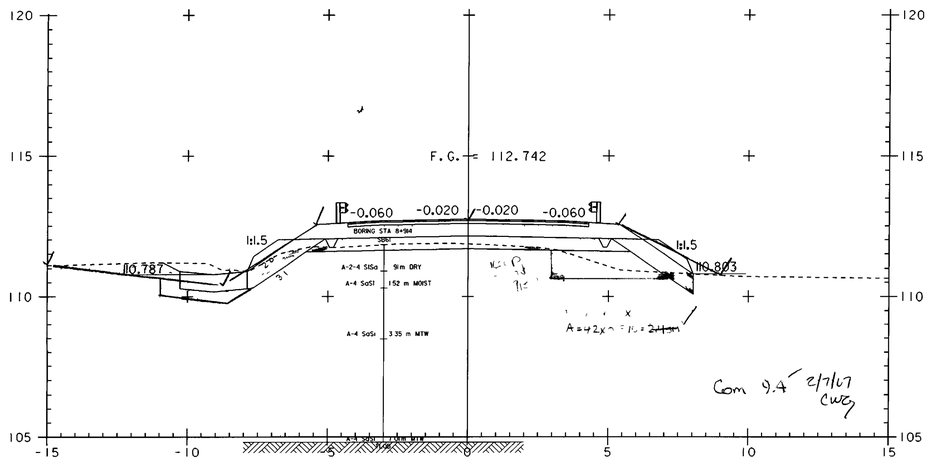

8+920

STA 8+909.760 END TAPER BEGIN FULL DEPTH SAND (450MM)
STA 8+908.160 BEGIN TAPER

0 2 4 6 8 10
SCALE IN METERS

PROJECT NAME:	HIGHGATE - FRANKLIN
PROJECT NUMBER:	STP RS 0301(1) SA
FILE NAME: ...85c060\design\dc060x11.dgn	PLOT DATE: 09-MAY-2005
PROJECT LEADER: DELLASANTA	DRAWN BY: SQUAD B
DESIGNED BY: SQUAD B	CHECKED BY: SQUAD B
IPARM FILE NAME: dc060x114.i	SHEET 428 OF 450

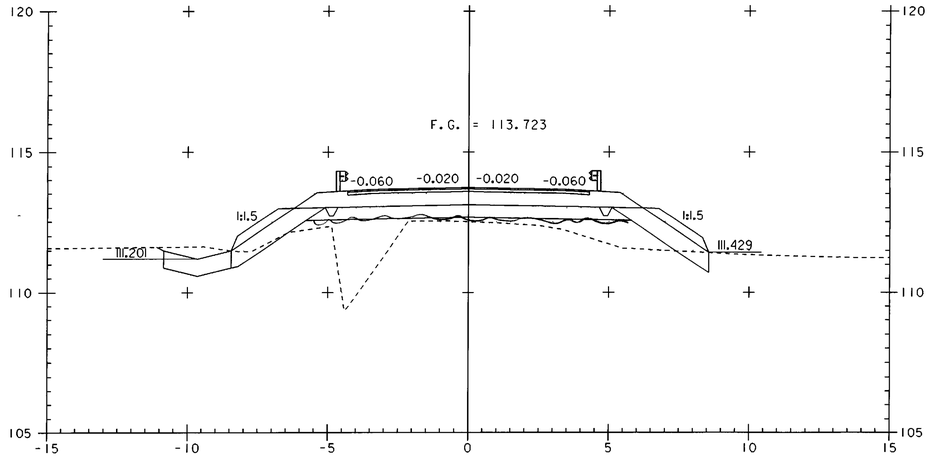

8+949

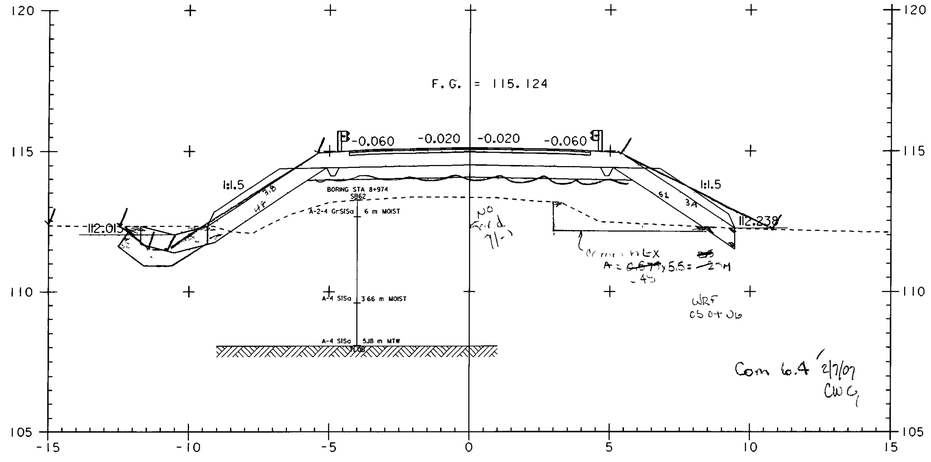

8+980

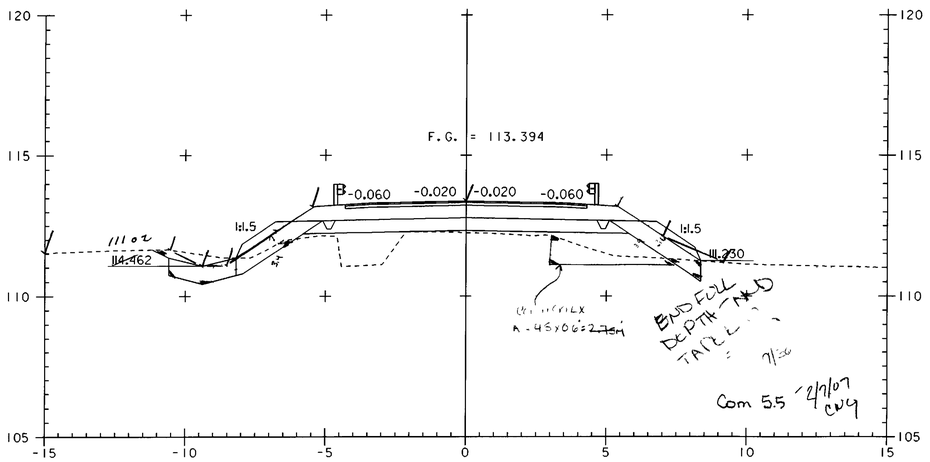

8+940

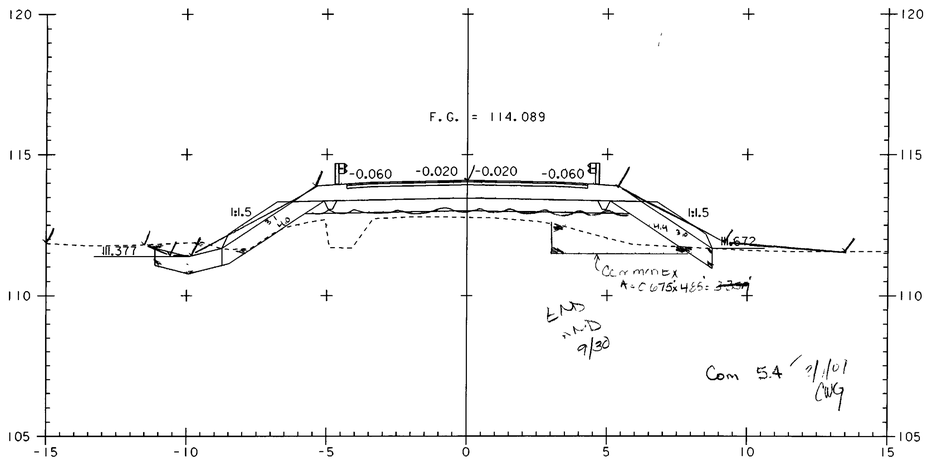

8+960

0 2 4 6 8 10
SCALE IN METERS

PROJECT NAME:	HIGHGATE - FRANKLIN
PROJECT NUMBER:	STP RS 0301(1) SA

FILE NAME: ...85c060\design\dc060xll.dgn		PLOT DATE:	09-MAY-2005
PROJECT LEADER:	DELLASANTA	DRAWN BY:	SQUAD B
DESIGNED BY:	SQUAD B	CHECKED BY:	SQUAD B
IPARM FILE NAME:	dc060xll5.i	SHEET	429 OF 450

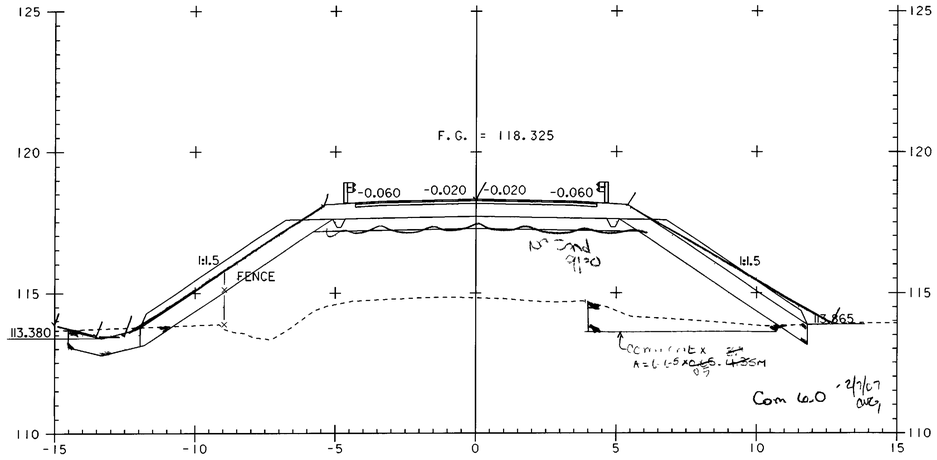

9+020

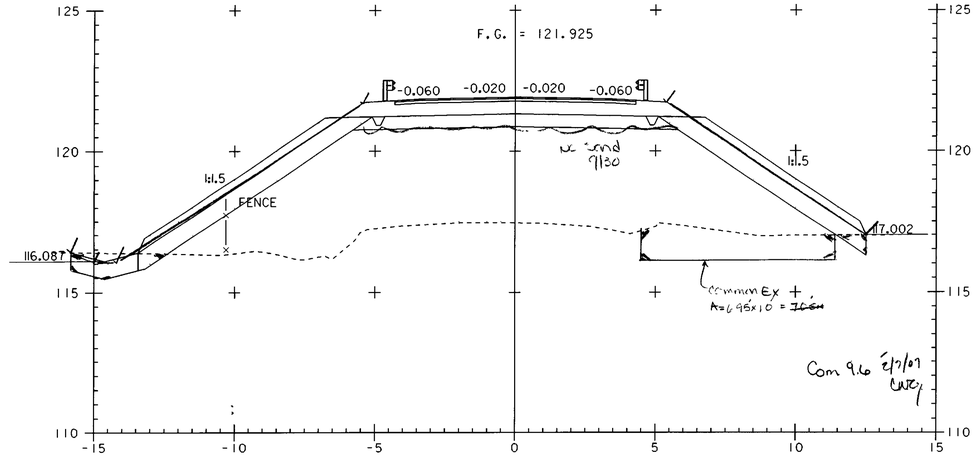

9+060

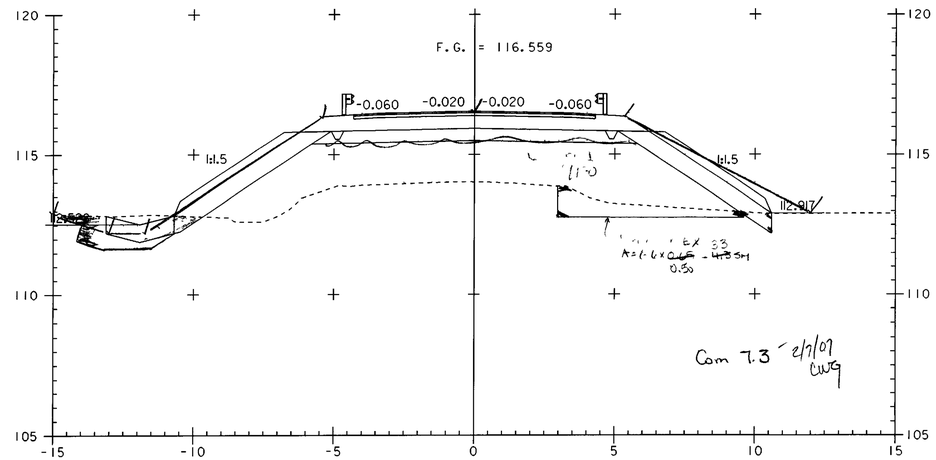

9+000

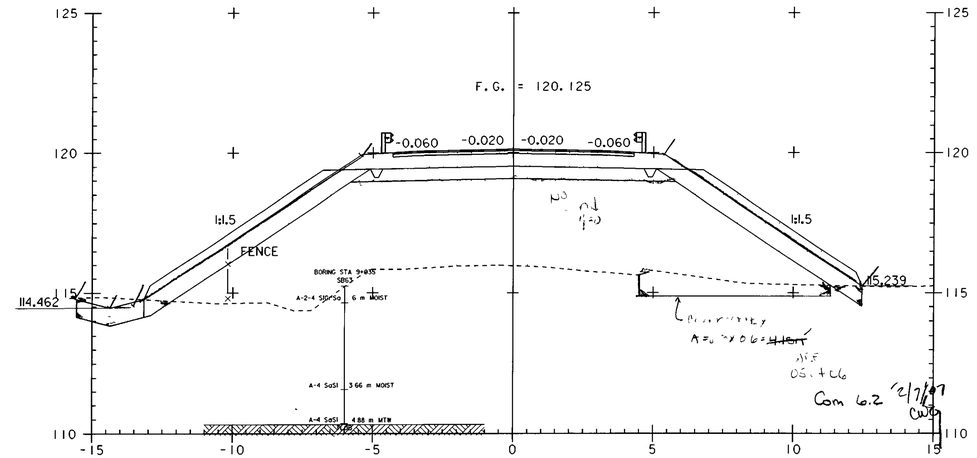

9+040

0 2 4 6 8 10
SCALE IN METERS

PROJECT NAME:	HIGHGATE - FRANKLIN
PROJECT NUMBER:	STP RS 0301(1) SA
FILE NAME: ...85c060\design\dc060x11.dgn	PLOT DATE: 09-MAY-2005
PROJECT LEADER: DELLASANTA	DRAWN BY: SQUAD B
DESIGNED BY: SQUAD B	CHECKED BY: SQUAD B
IPARM FILE NAME: dc060x116.i	SHEET 430 OF 450

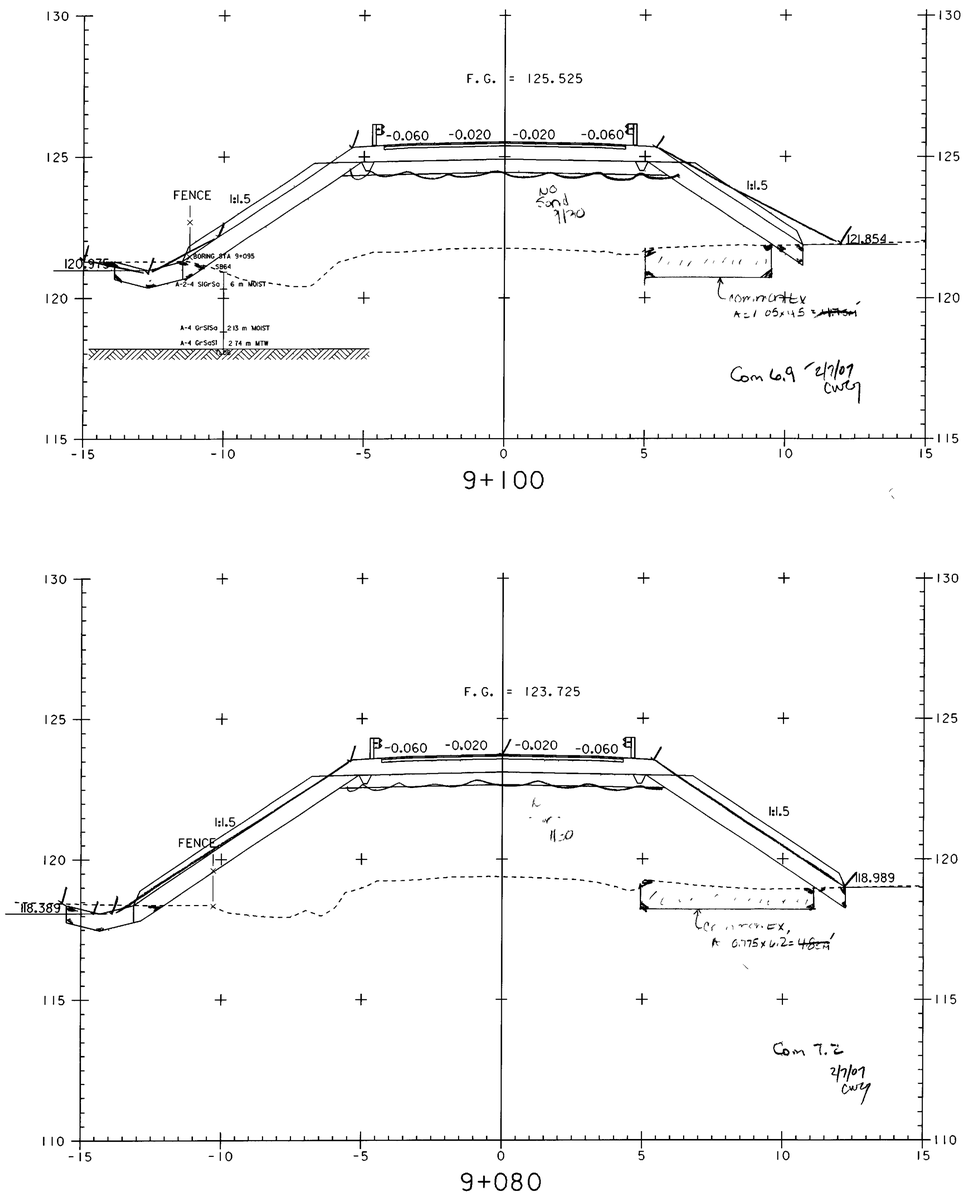

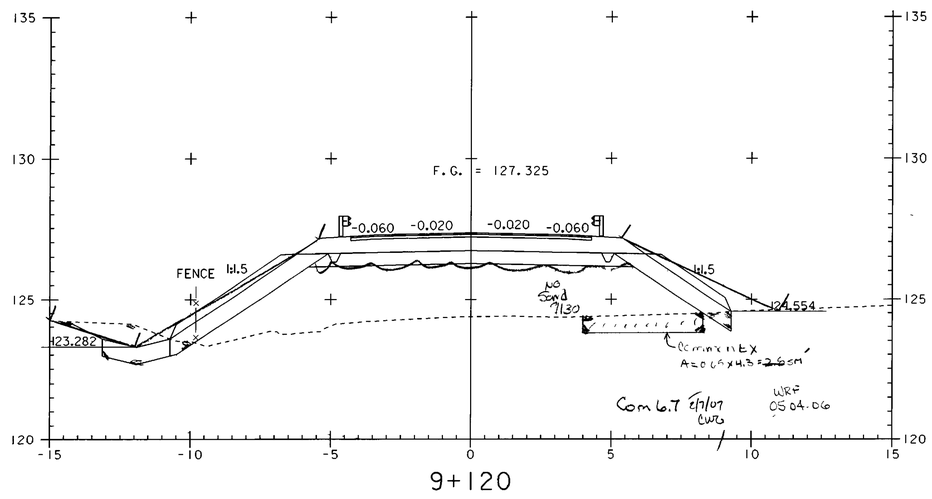

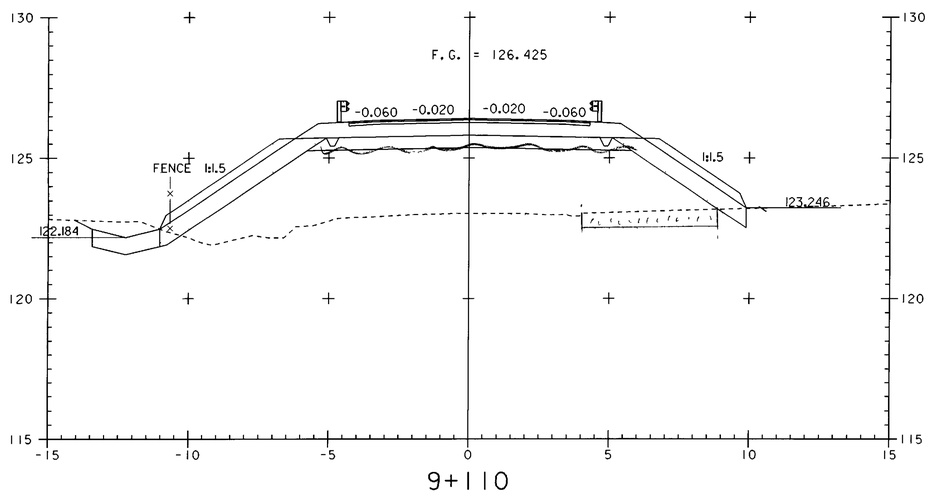

0 2 4 6 8 10
SCALE IN METERS

PROJECT NAME:	HIGHGATE - FRANKLIN
PROJECT NUMBER:	STP RS 0301(1) SA
FILE NAME: ...85c060\design\dc060x11.dgn	PLOT DATE: 09-MAY-2005
PROJECT LEADER: DELLASANTA	DRAWN BY: SQUAD B
DESIGNED BY: SQUAD B	CHECKED BY: SQUAD B
IPARM FILE NAME: dc060x117.i	SHEET 431 OF 450

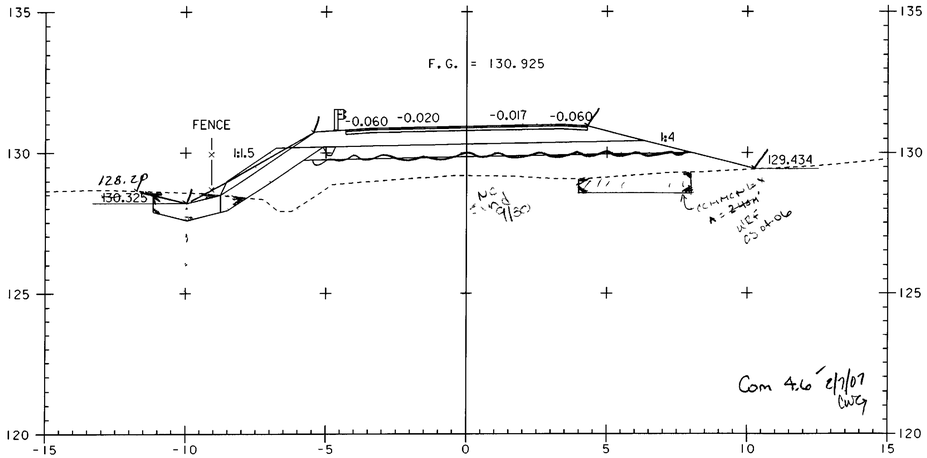

9+160

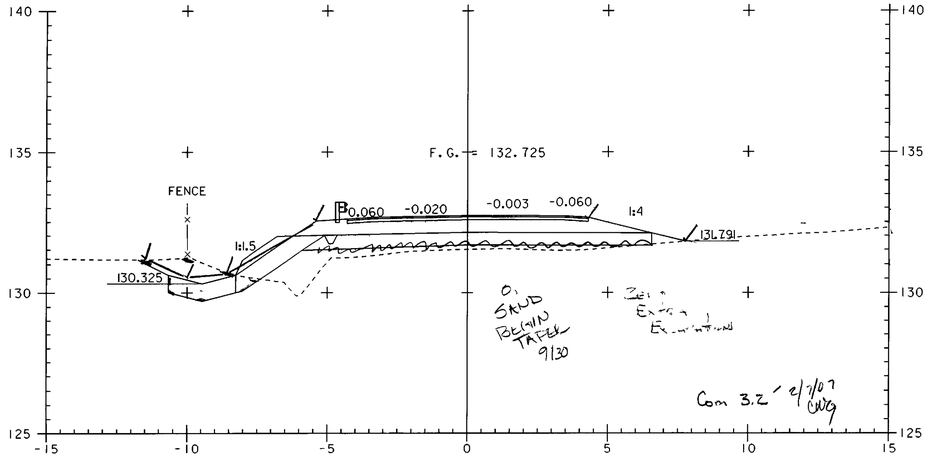

9+180

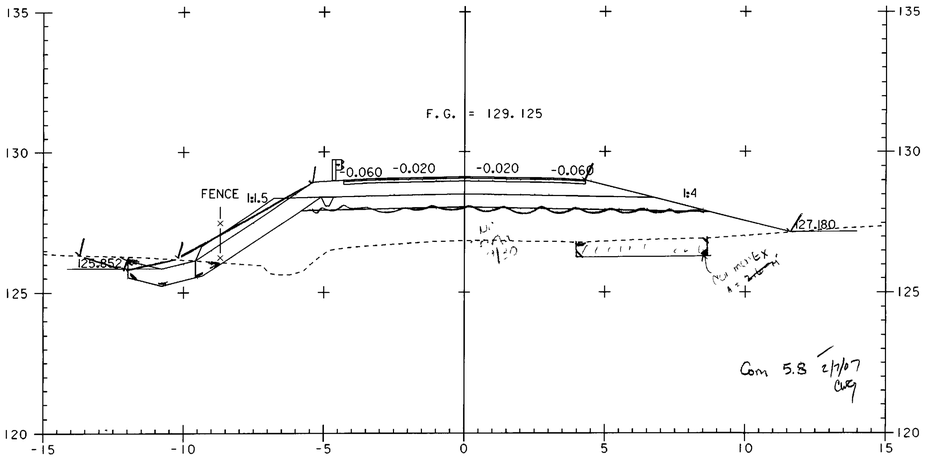

9+140

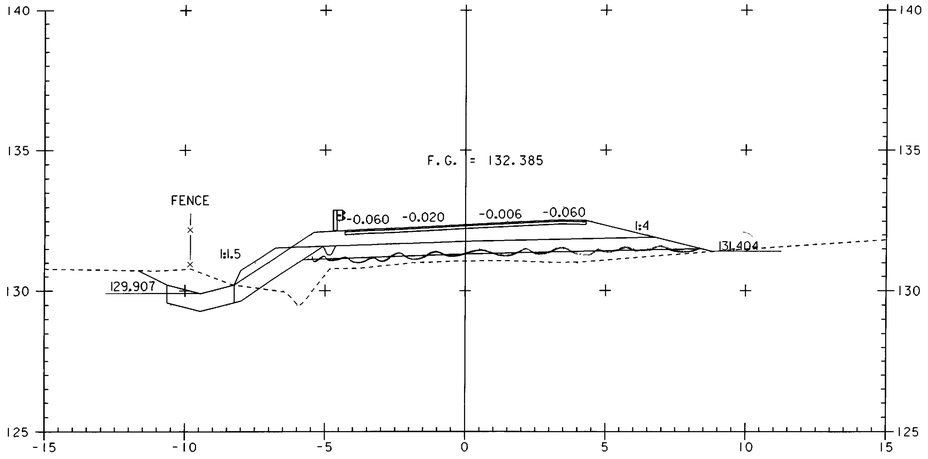

9+176

0 2 4 6 8 10
SCALE IN METERS

PROJECT NAME:	HIGHGATE - FRANKLIN
PROJECT NUMBER:	STP RS 0301(1) SA
FILE NAME: ...85c060\design\dc060x11.dgn	PLOT DATE: 09-MAY-2005
PROJECT LEADER: DELLASANTA	DRAWN BY: SQUAD B
DESIGNED BY: SQUAD B	CHECKED BY: SQUAD B
IPARM FILE NAME: dc060x118.i	SHEET 432 OF 450

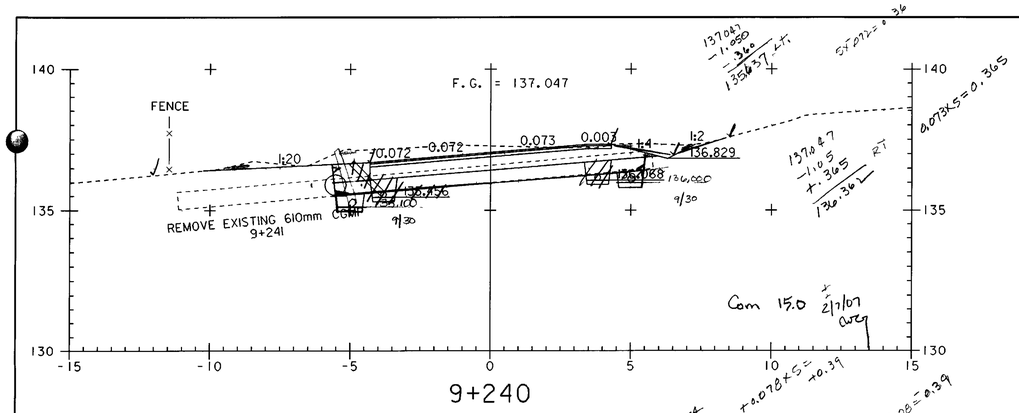

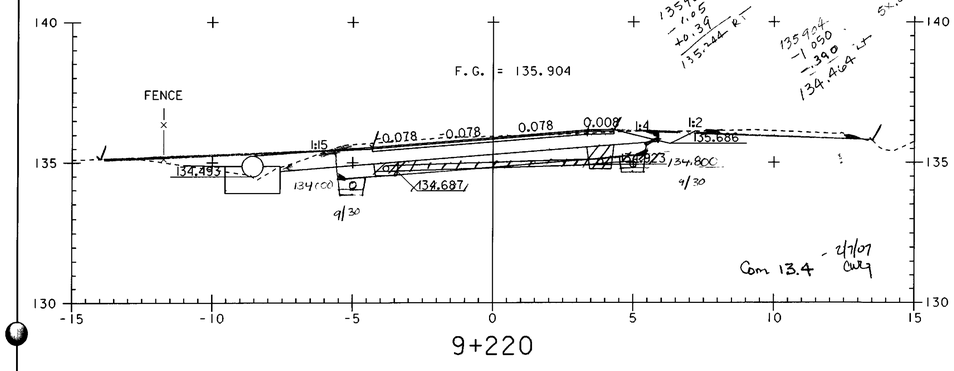

PROFILE TH #37

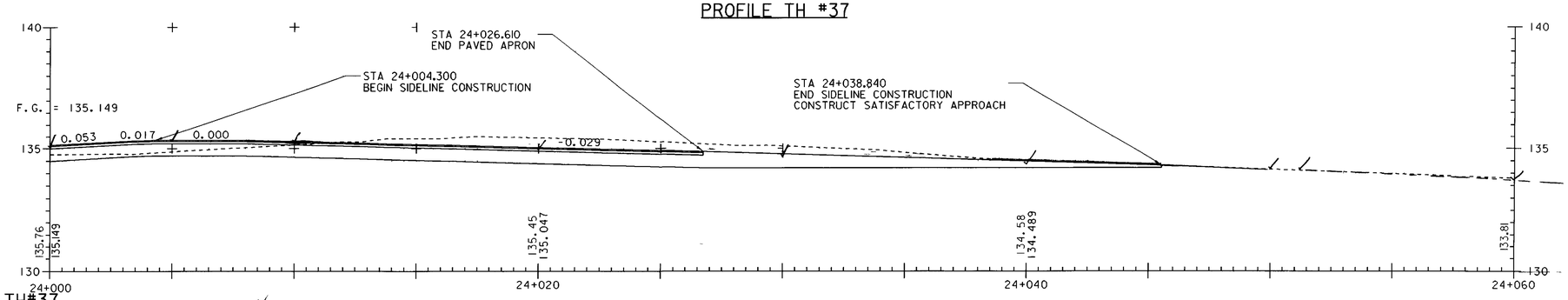

TH#3 TH#37
9+209.030 = 24+000

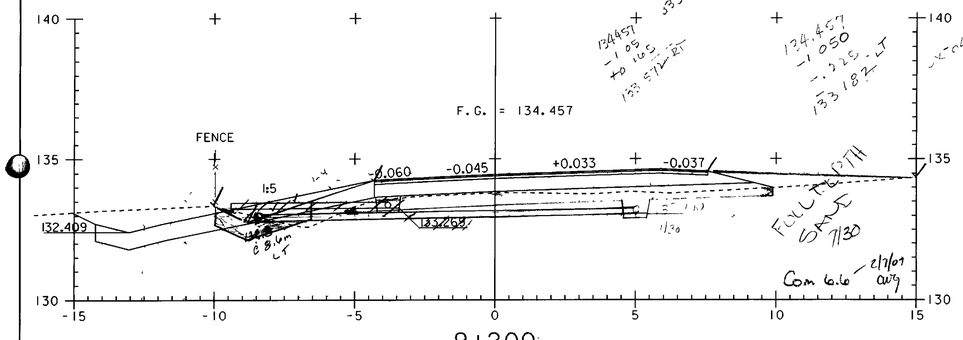

STA 9+200.000 END TAPER
STA 9+197.240 END FULL DEPTH SAND (450MM) BEGIN TAPER

0 2 4 6 8 10
SCALE IN METERS

PROJECT NAME:	HIGHGATE - FRANKLIN
PROJECT NUMBER:	STP RS 0301(I) SA
FILE NAME: ...85c060\design\dc060xll.dgn	PLOT DATE: 09-MAY-2005
PROJECT LEADER: DELLASANTA	DRAWN BY: SQUAD B
DESIGNED BY: SQUAD B	CHECKED BY: SQUAD B
IPARM FILE NAME: dc060xll9.i	SHEET 433 OF 450

TH #37 SECTIONS

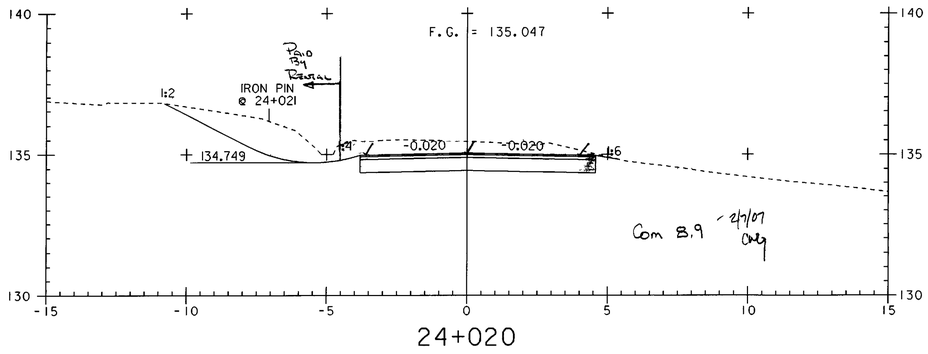

24+020

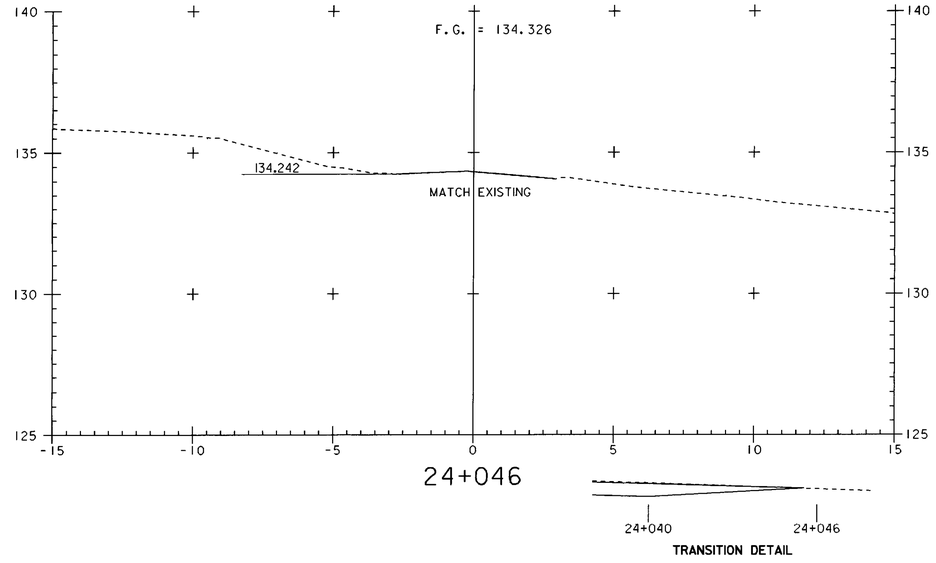

24+046

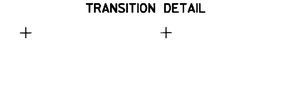

TRANSITION DETAIL

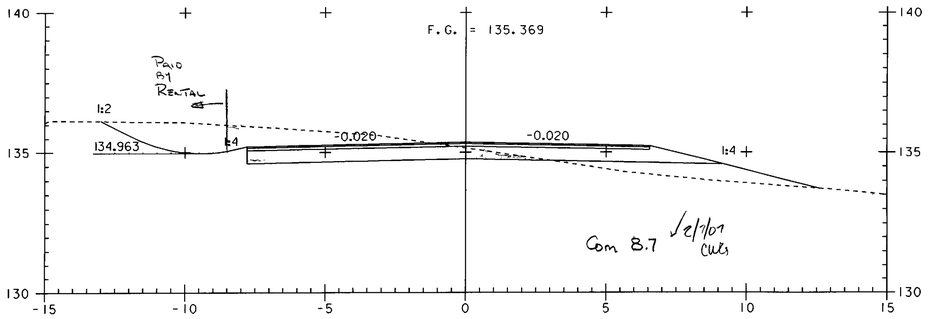

24+010

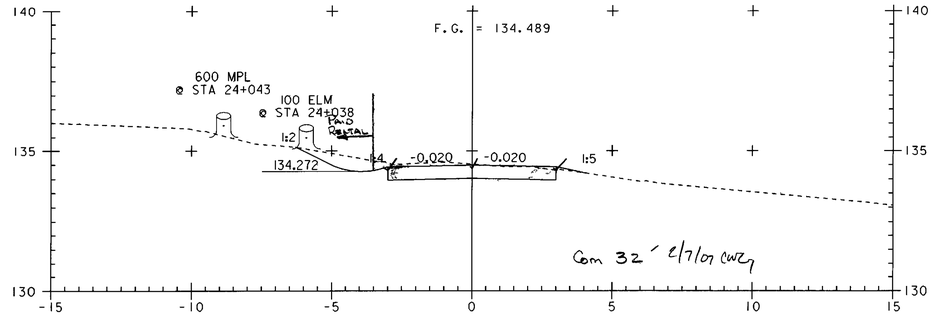

24+040

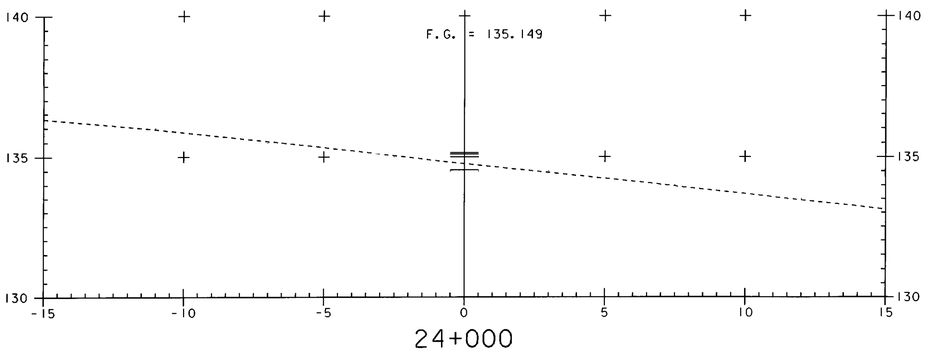

24+000

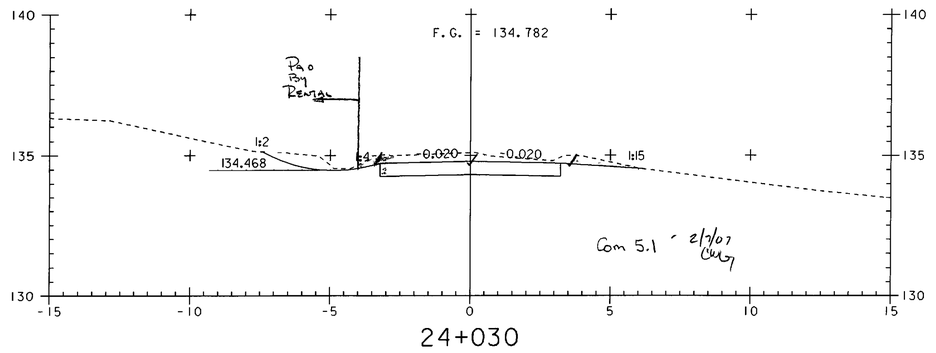

24+030

0 2 4 6 8 10
SCALE IN METERS

PROJECT NAME:	HIGHGATE - FRANKLIN
PROJECT NUMBER:	STP RS 030I(I) SA

FILE NAME: ...85c060\design\dc060xll.dgn		PLOT DATE:	09-MAY-2005
PROJECT LEADER:	DELLASANTA	DRAWN BY:	SQUAD B
DESIGNED BY:	SQUAD B	CHECKED BY:	SQUAD B
IPARM FILE NAME:	dc060xlll0.i	SHEET	434 OF 450

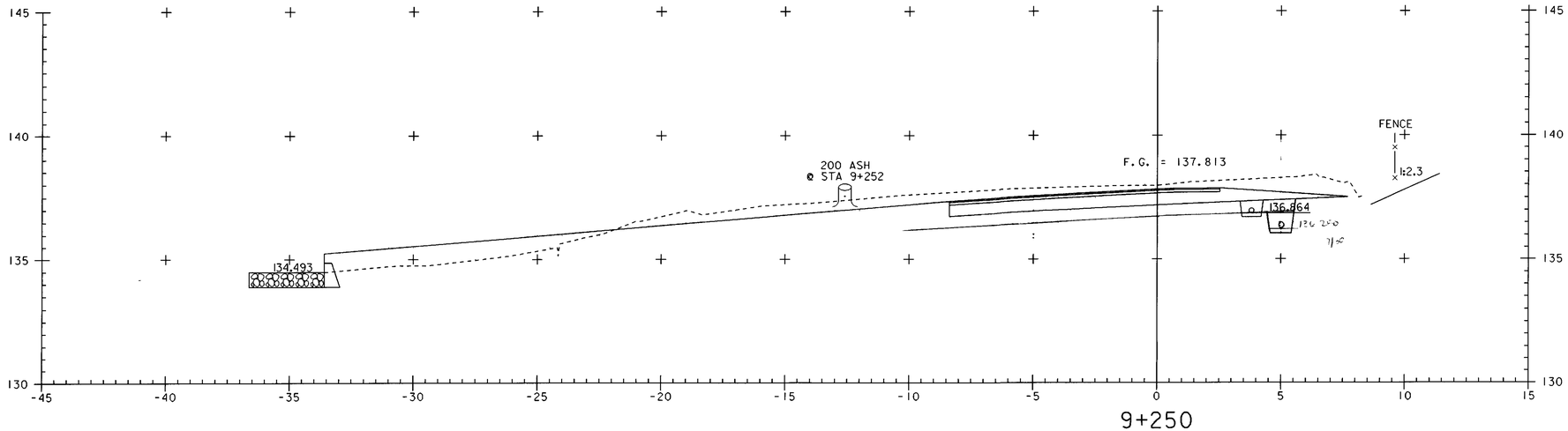

9+250
ASKEW = 30°53'21" LT

PROFILE TH #21

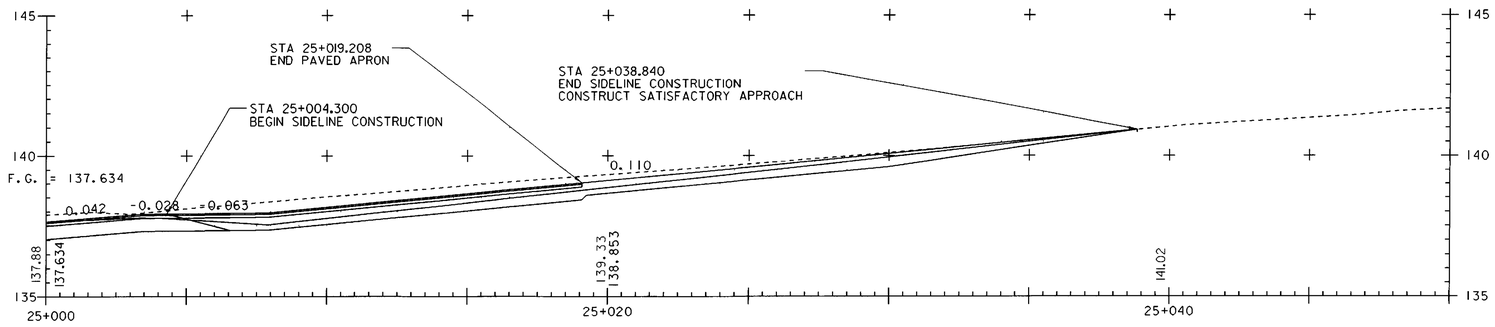

TH#3 TH#21
9+254.100 = 25+000

0 2 4 6 8 10
SCALE IN METERS

PROJECT NAME:	HIGHGATE - FRANKLIN
PROJECT NUMBER:	STP RS 0301(1) SA
FILE NAME: ...85c060\design\dc060x11.dgn	PLOT DATE: 09-MAY-2005
PROJECT LEADER: DELLASANTA	DRAWN BY: SQUAD B
DESIGNED BY: SQUAD B	CHECKED BY: SQUAD B
IPARM FILE NAME: dc060x111.i	SHEET 435 OF 450

TH #21 SECTIONS

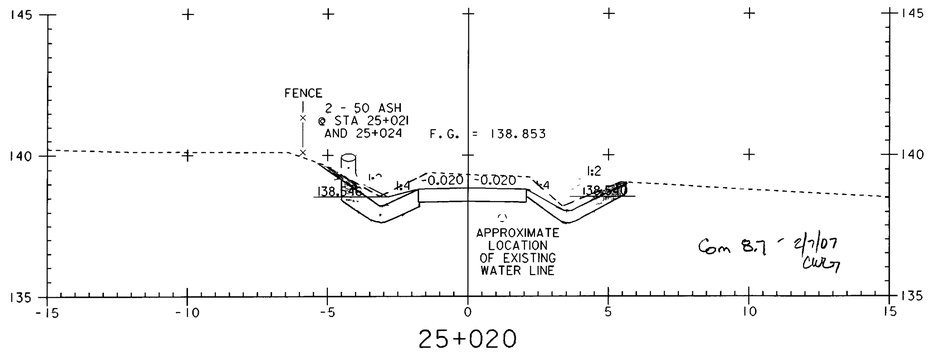

25+020

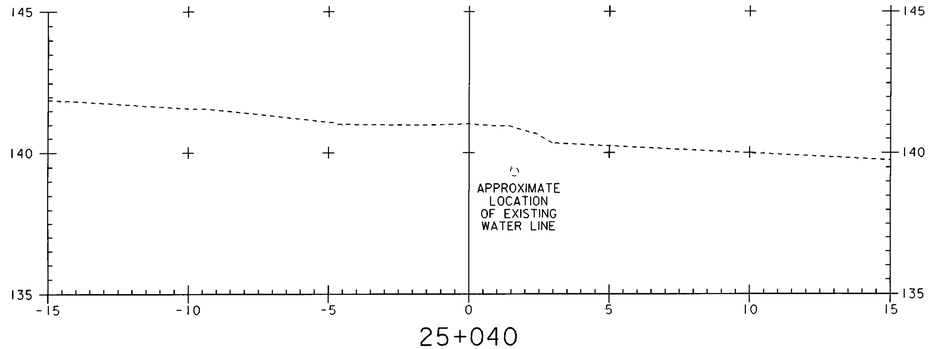

25+040

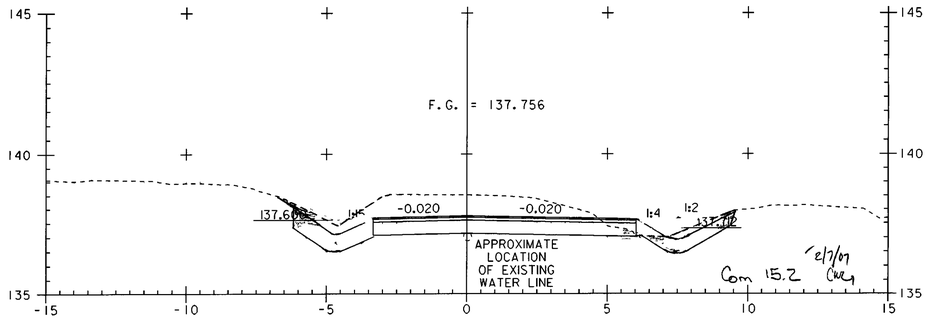

25+010

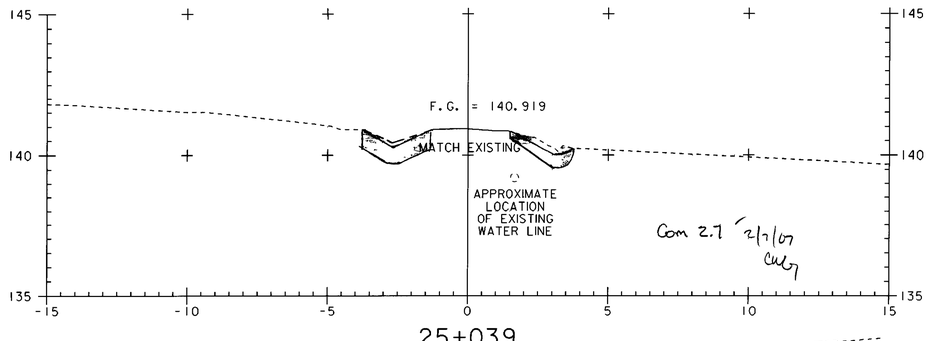

25+039

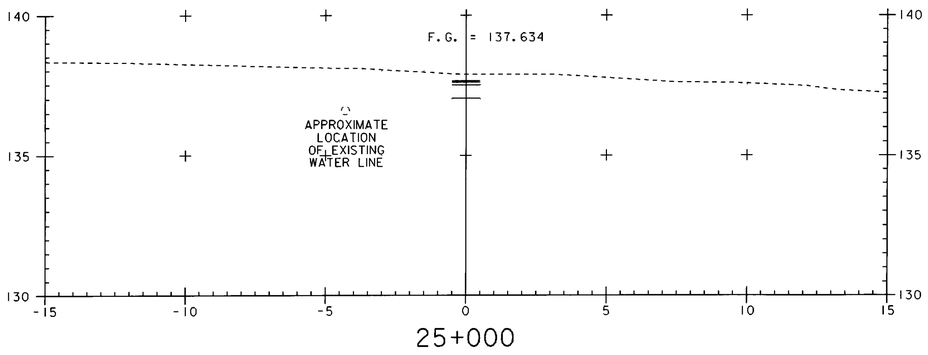

25+000

TRANSITION DETAIL

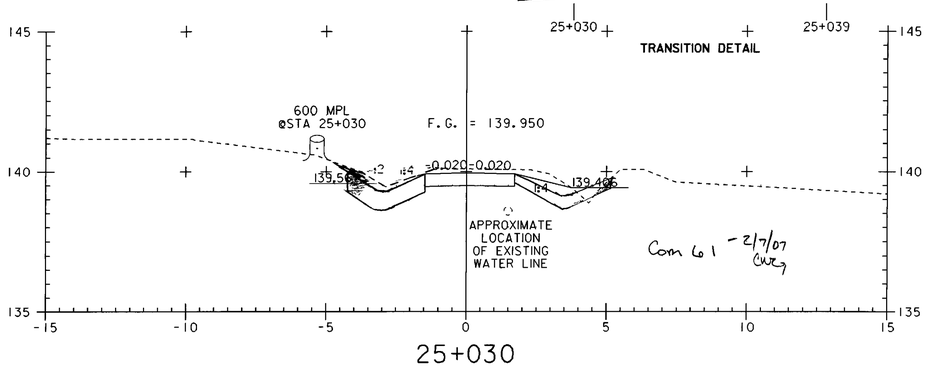

25+030

0 2 4 6 8 10
SCALE IN METERS

PROJECT NAME:	HIGHGATE - FRANKLIN
PROJECT NUMBER:	STP RS 0301(1) SA

FILE NAME: ...85c060\design\dc060xll.dgn		PLOT DATE:	09-MAY-2005
PROJECT LEADER:	DELLASANTA	DRAWN BY:	SQUAD B
DESIGNED BY:	SQUAD B	CHECKED BY:	SQUAD B
IPARM FILE NAME:	dc060xlll2.1	SHEET	436 OF 450

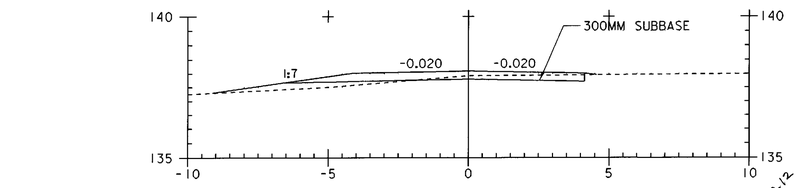

DRIVE AT 9+263 LT
A - A

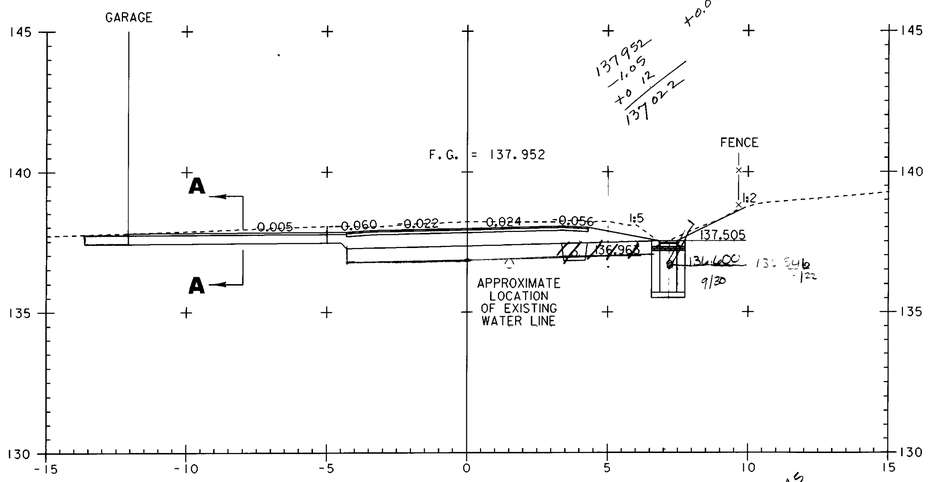

9+263

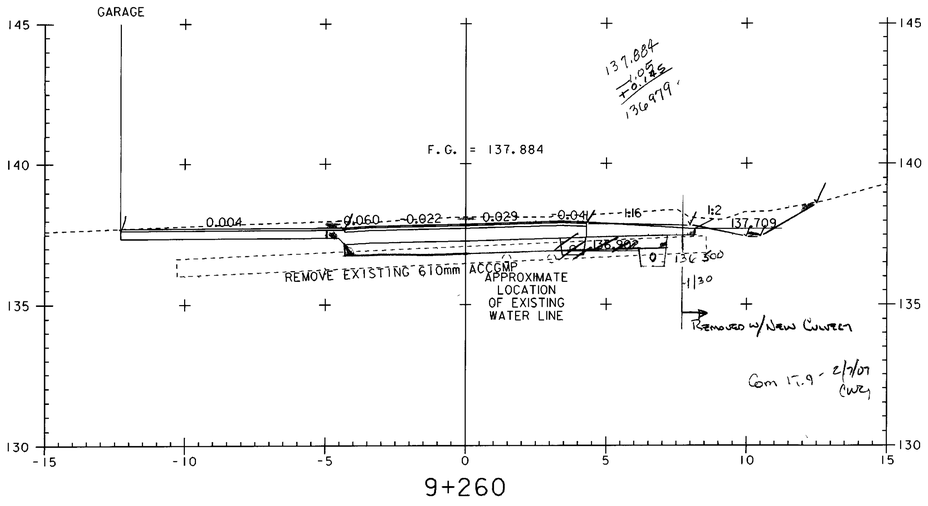

9+260

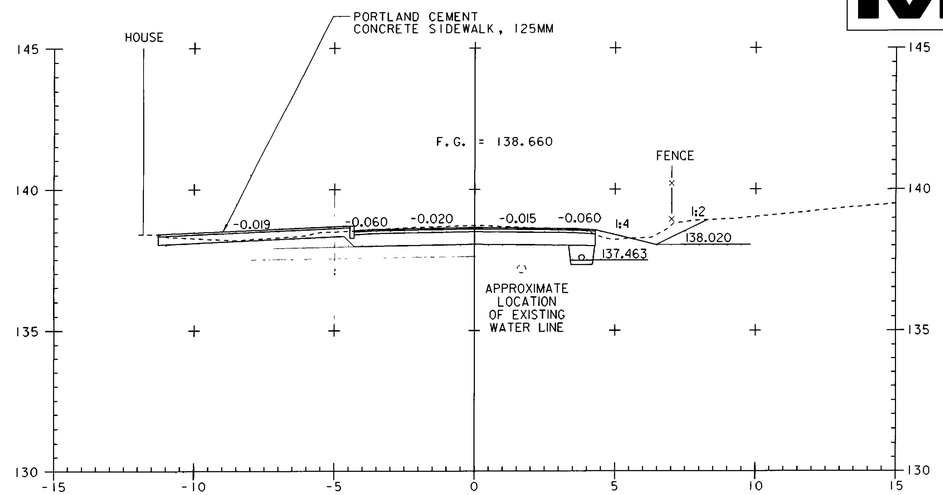

9+296

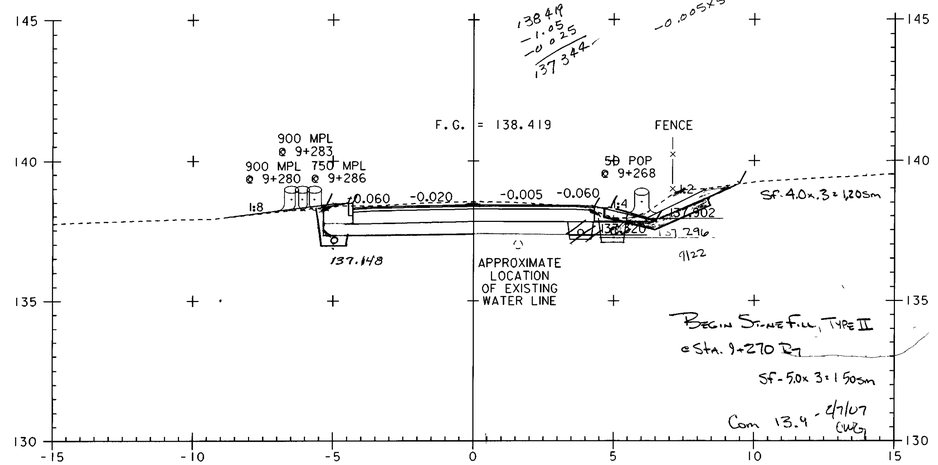

9+280

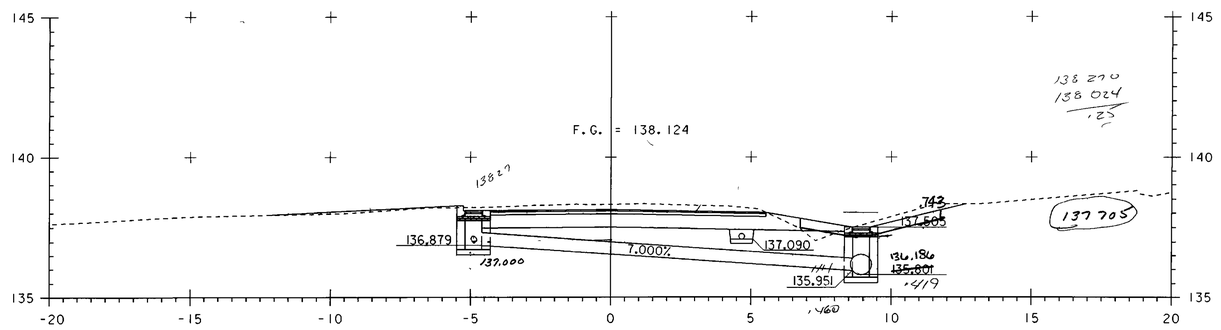

9+267.634

0 2 4 6 8 10
SCALE IN METERS

PROJECT NAME:	HIGHGATE - FRANKLIN
PROJECT NUMBER:	STP RS 0301(1) SA
FILE NAME: ...85c060\design\dc060xll.dgn	PLOT DATE: 09-MAY-2005
PROJECT LEADER: DELLASANTA	DRAWN BY: SQUAD B
DESIGNED BY: SQUAD B	CHECKED BY: SQUAD B
IPARM FILE NAME: dc060xll3.1	SHEET 437 OF 450

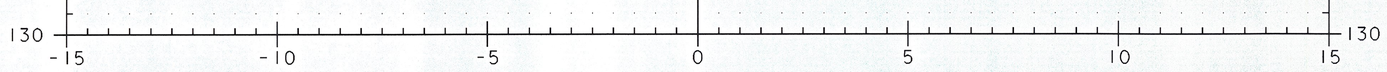

ah 14+660

POE Sta 9+306.288 =
POB Sta 14+650.000
EQ = +5343.712

STA 9+300.000 BEGIN SAND TAPER

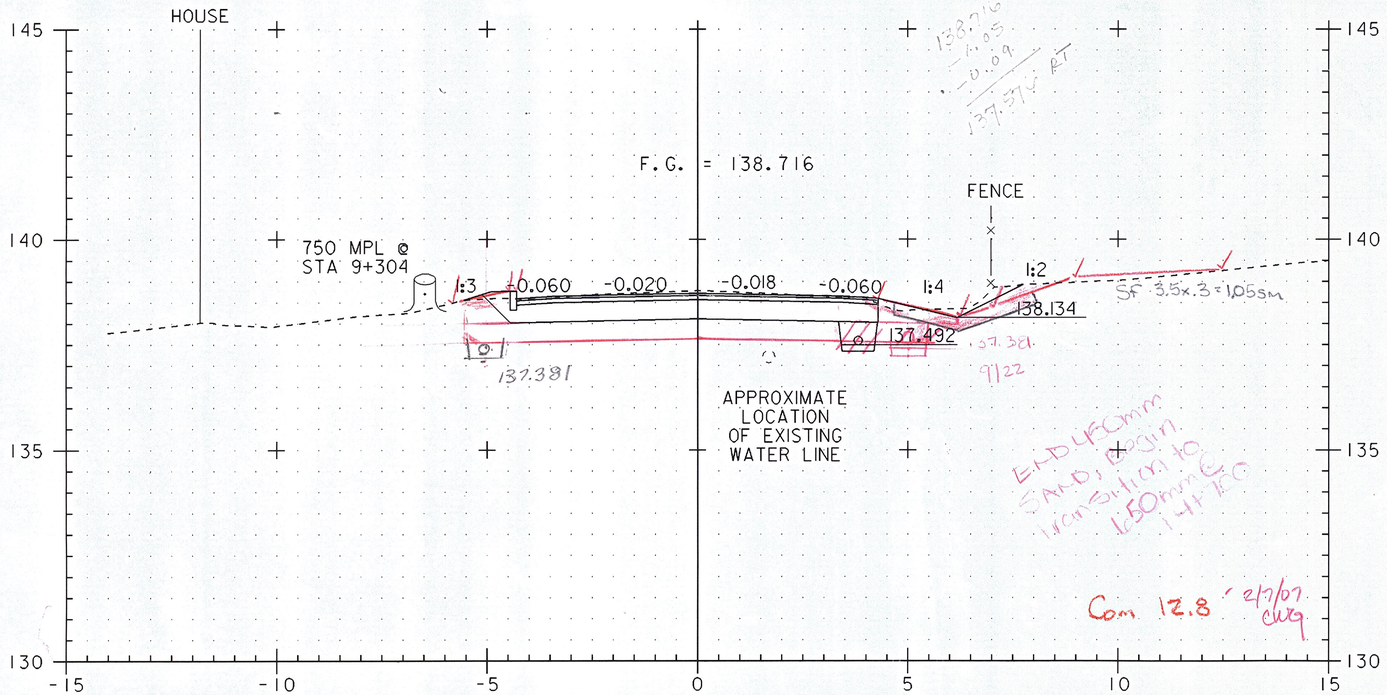

9+300

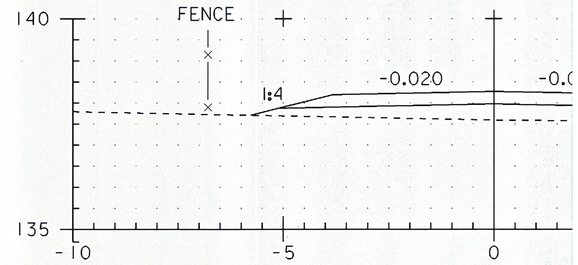

DRIVE AT 14+
A - A

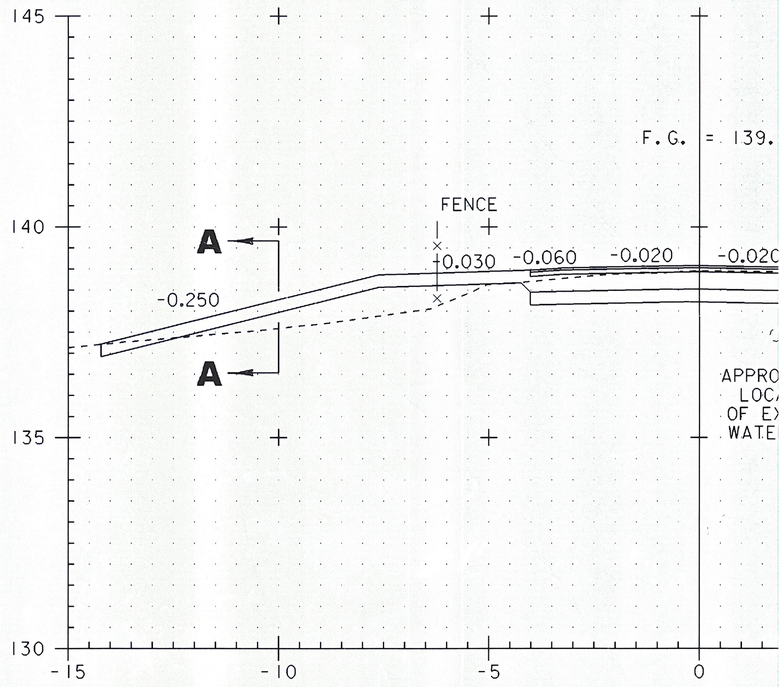

ah 14+67

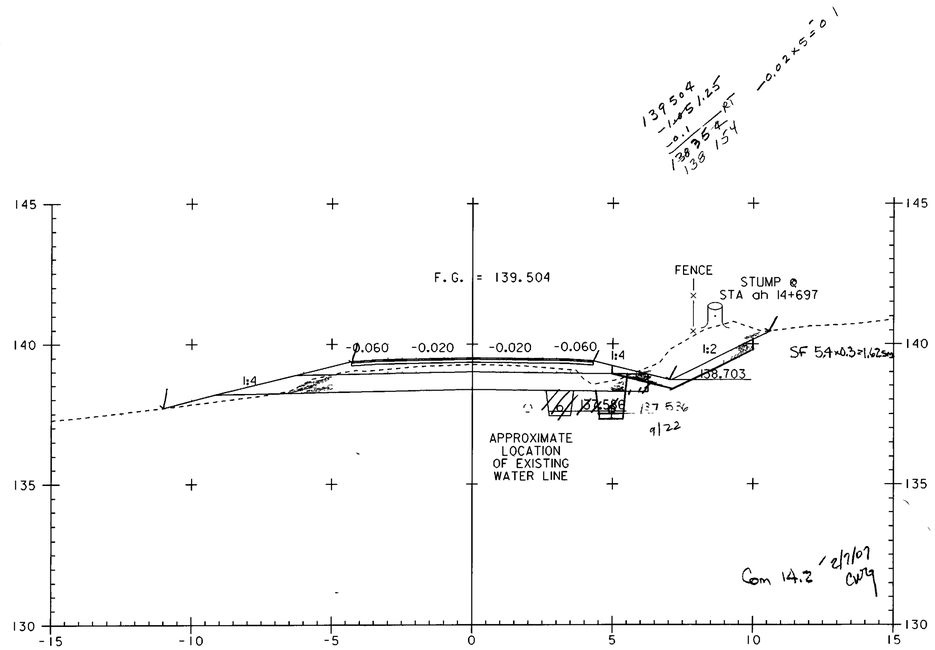

ah 14+700

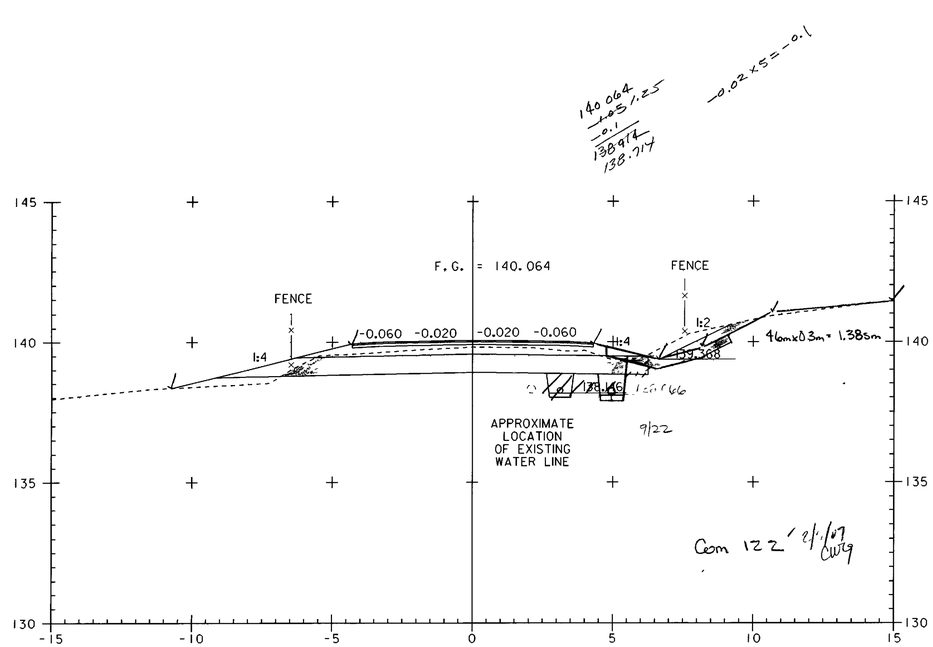

ah 14+740

STA AH 14+700.000 END SAND TAPER - BEGIN FULL DEPTH (650MM)

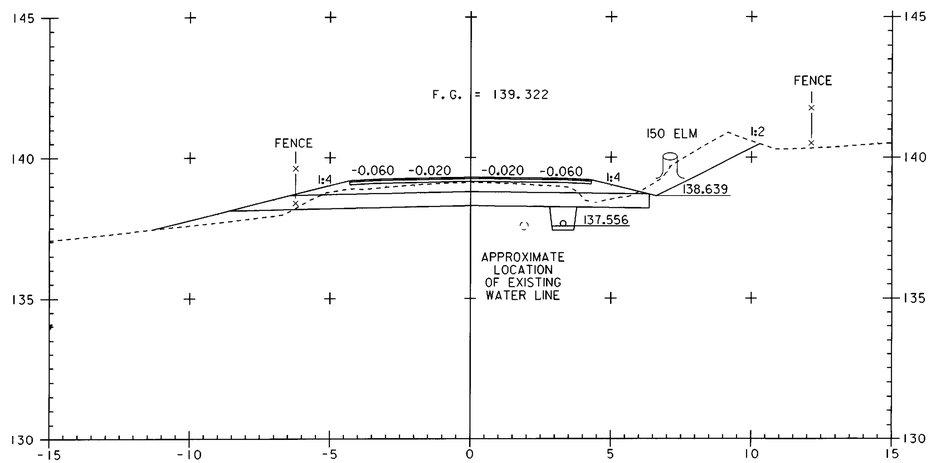

ah 14+687

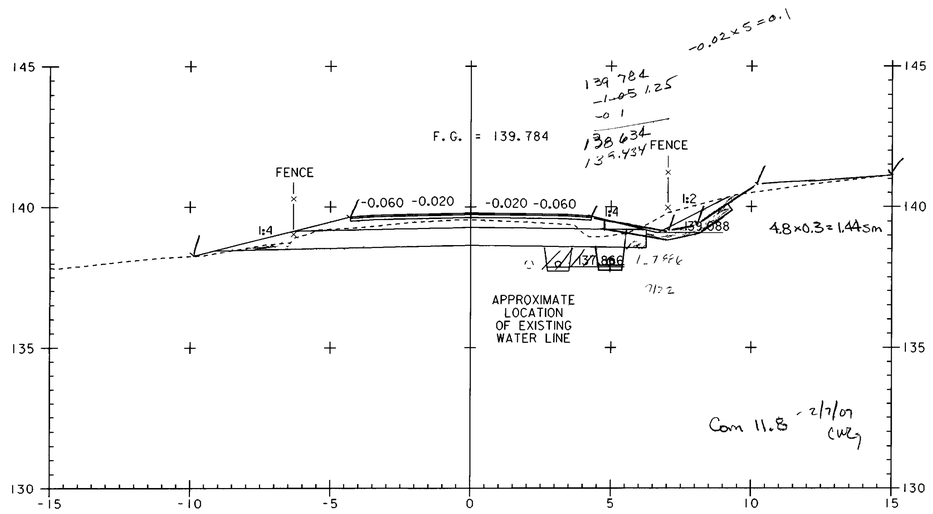

ah 14+720

0 2 4 6 8 10
SCALE IN METERS

PROJECT NAME:	HIGHGATE - FRANKLIN
PROJECT NUMBER:	STP RS 0301(1) SA
FILE NAME: ...85c060\design\dc060x11.dgn	PLOT DATE: 09-MAY-2005
PROJECT LEADER: DELLASANTA	DRAWN BY: SQUAD B
DESIGNED BY: SQUAD B	CHECKED BY: SQUAD B
IPARM FILE NAME: dc060x1115.i	SHEET 439 OF 450

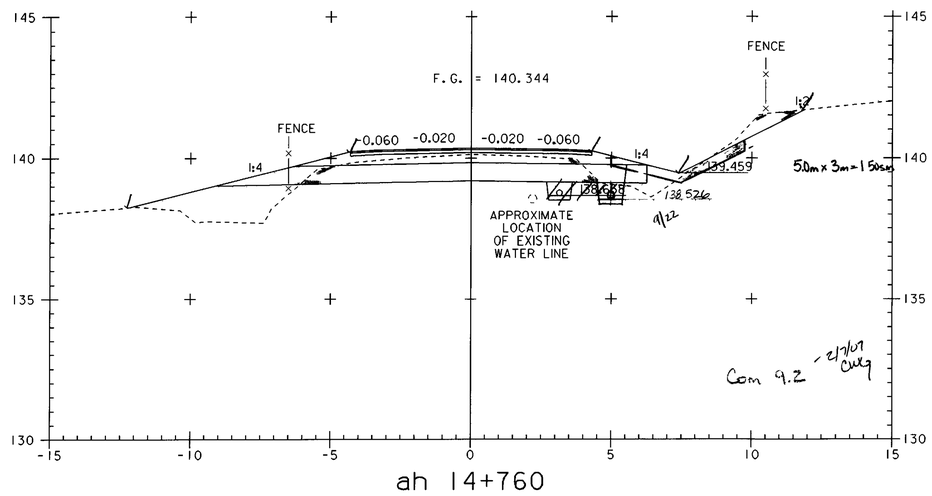

ah 14+760

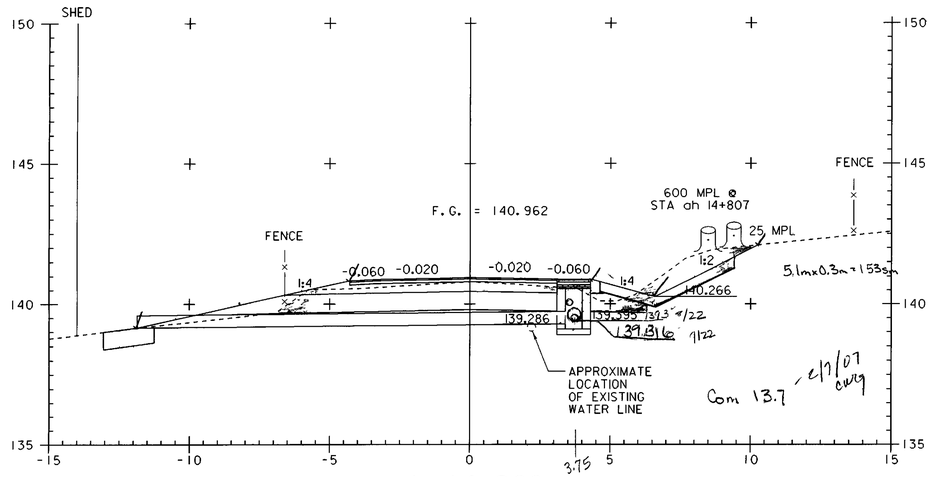

ah 14+800

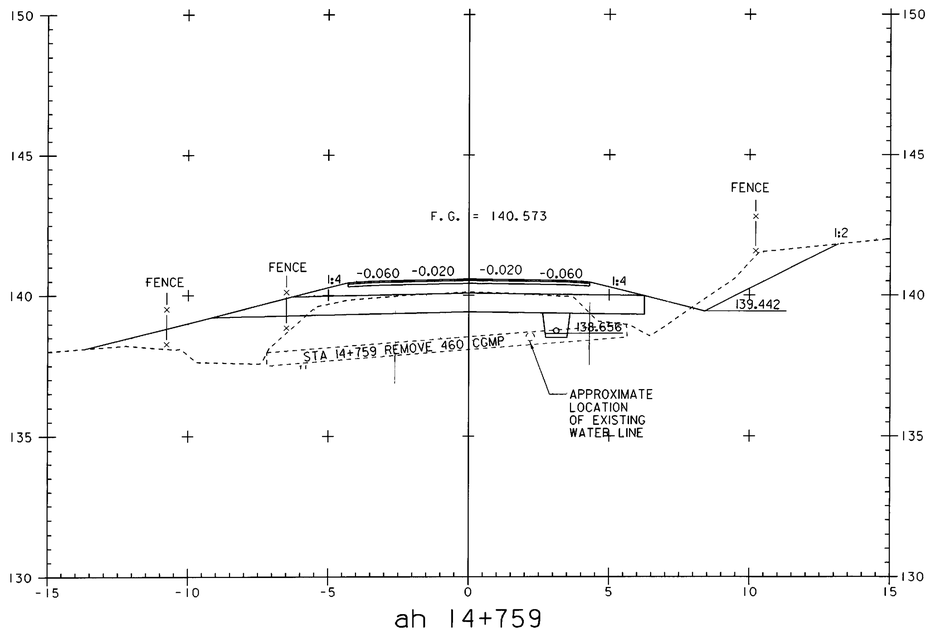

ah 14+759

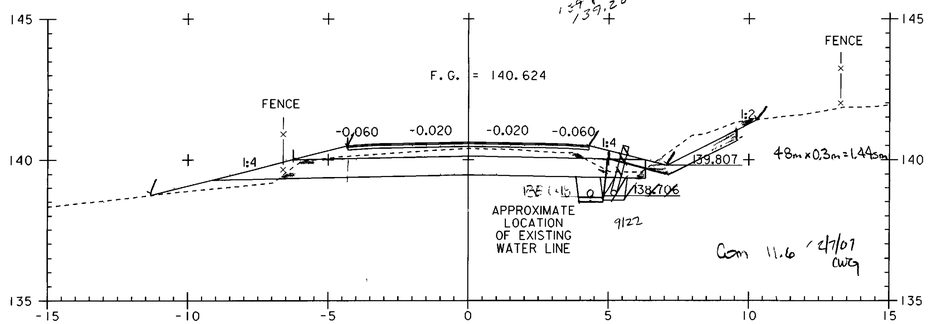

ah 14+780

0 2 4 6 8 10
SCALE IN METERS

PROJECT NAME:	HIGHGATE - FRANKLIN
PROJECT NUMBER:	STP RS 0301(1) SA
FILE NAME: ...85c060\design\dc060x11.dgn	PLOT DATE: 09-MAY-2005
PROJECT LEADER: DELLASANTA	DRAWN BY: SQUAD B
DESIGNED BY: SQUAD B	CHECKED BY: SQUAD B
IPARM FILE NAME: dc060x1116.i	SHEET 440 OF 450

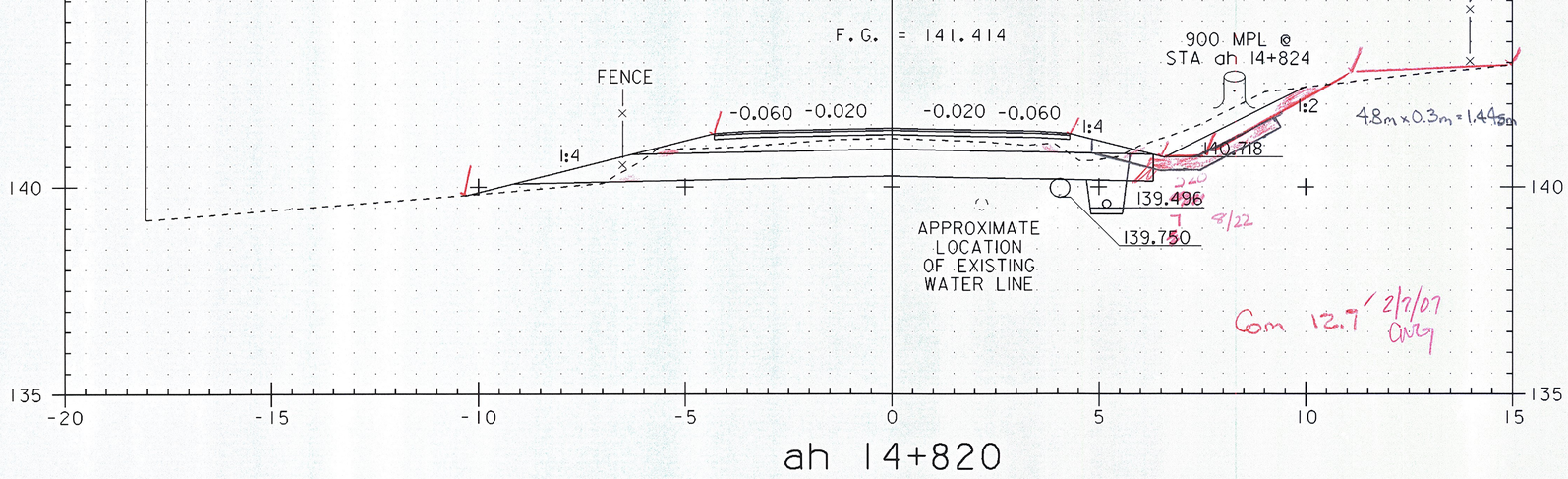

ah 14+820

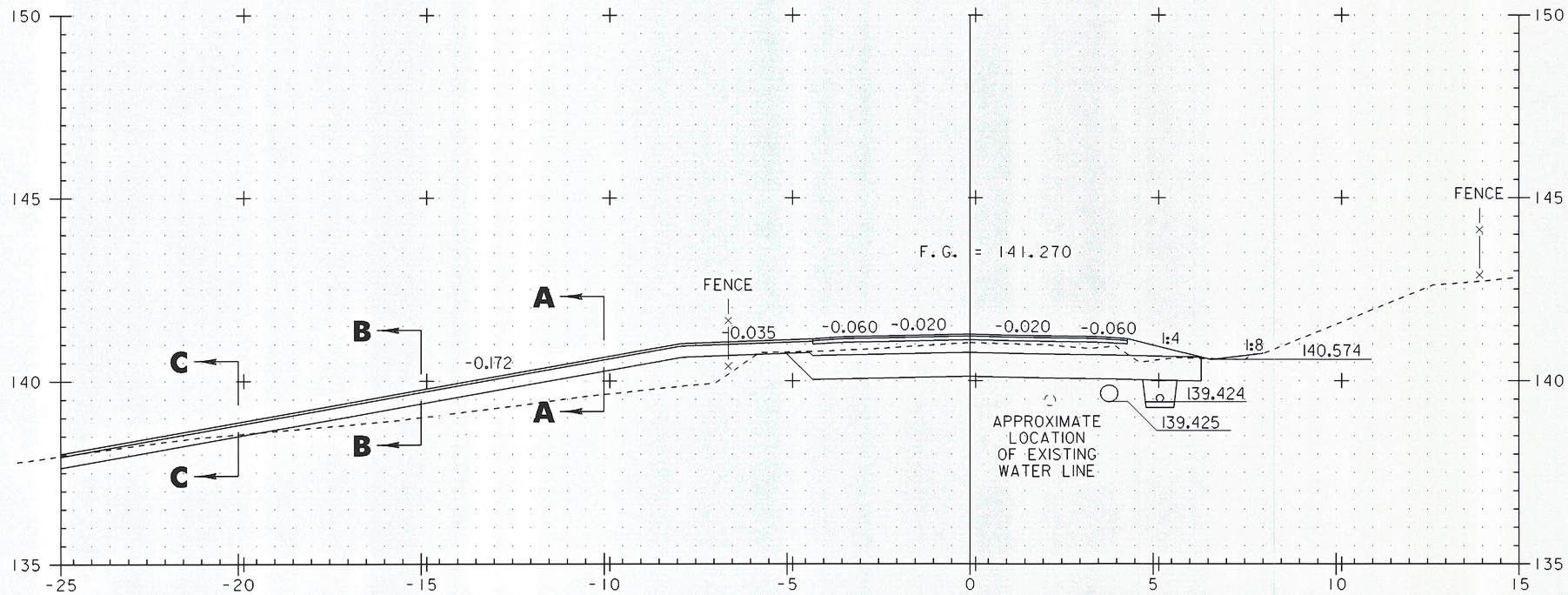

ah 14+806

0 2 4 6 8 10

SCALE IN METERS

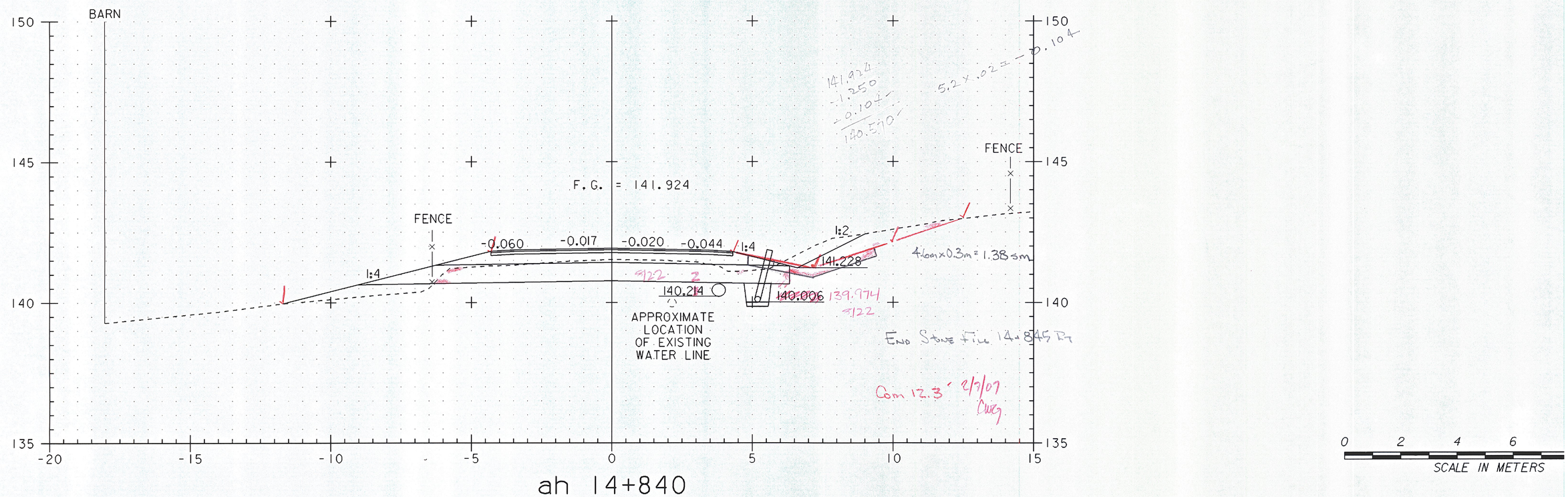

BARN
FENCE
FENCE
F.G. = 141.924
-0.060
-0.017
-0.020
-0.044
1:4
1:4
1:2
141.228
140.214
140.006
139.974
APPROXIMATE LOCATION OF EXISTING WATER LINE
141.924
-1.250
-0.104
140.570
5.2 x .02 = -0.104
4.6m x 0.3m = 1.38 sm
End Stone Fill 14+845 Rt
Com 12.3' 2/7/07
150
145
140
135
-20
-15
-10
-5
0
5
10
15
0
2
4
6
SCALE IN METERS

ah 14+840

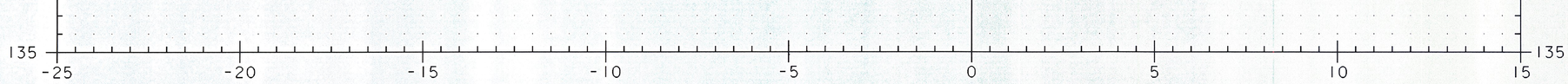

ah 14+858

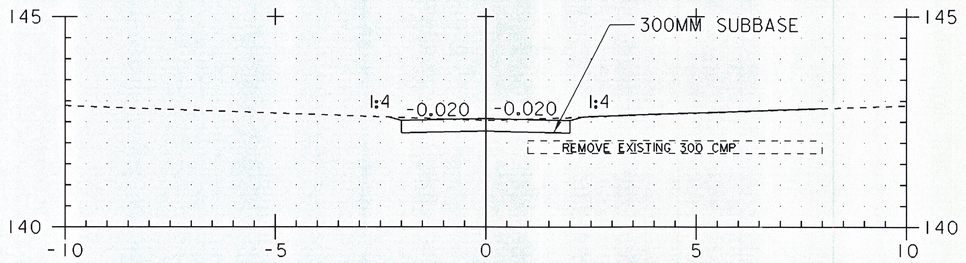

DRIVE AT 14+850 RT
A - A

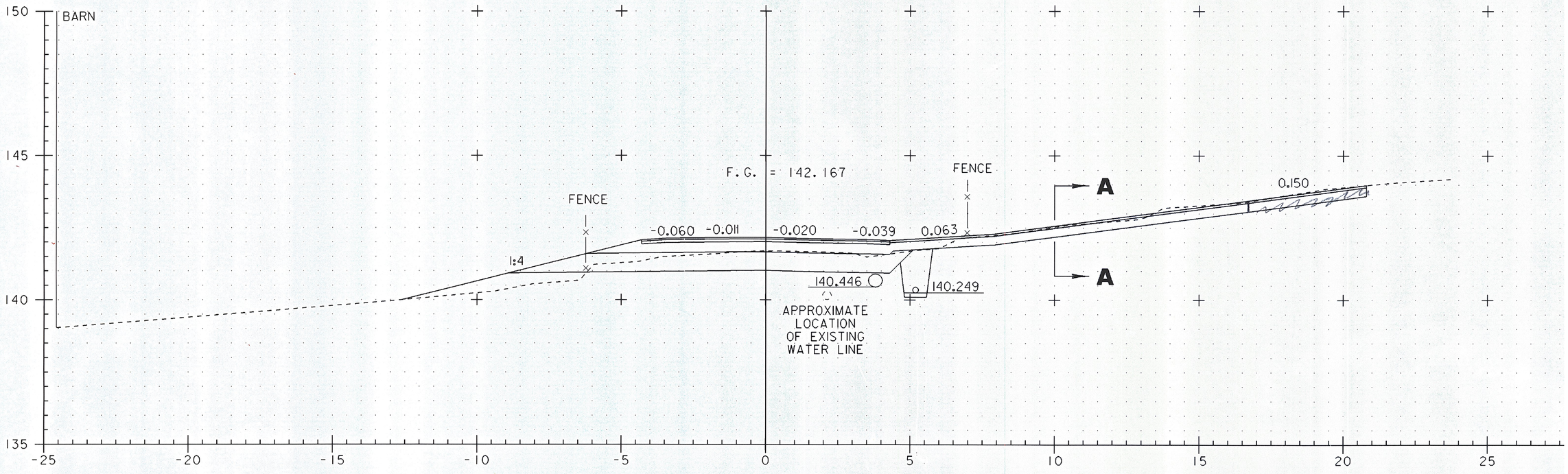

ah 14+850

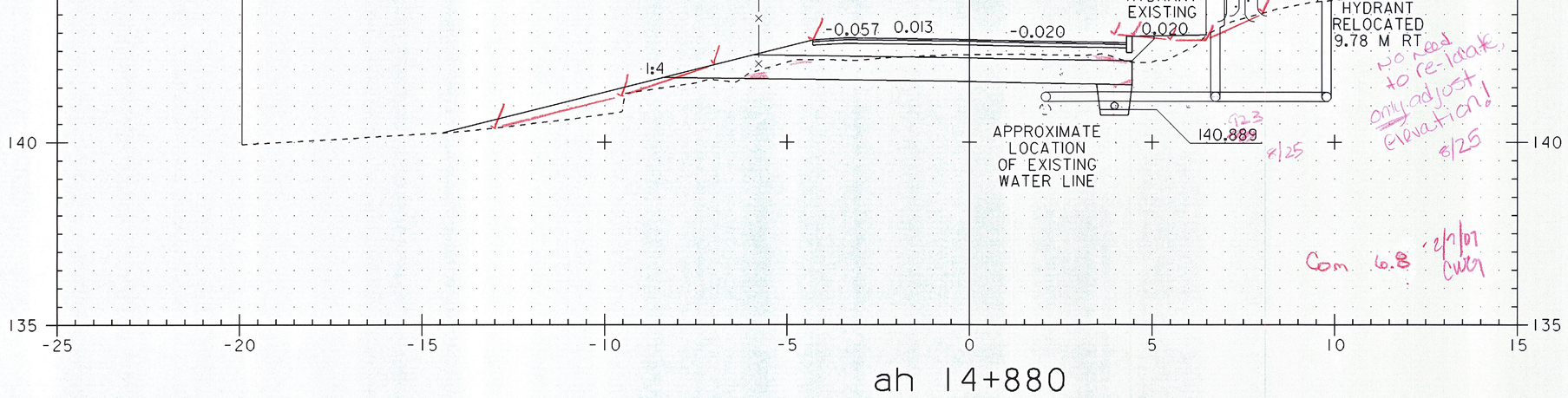

ah 14+880

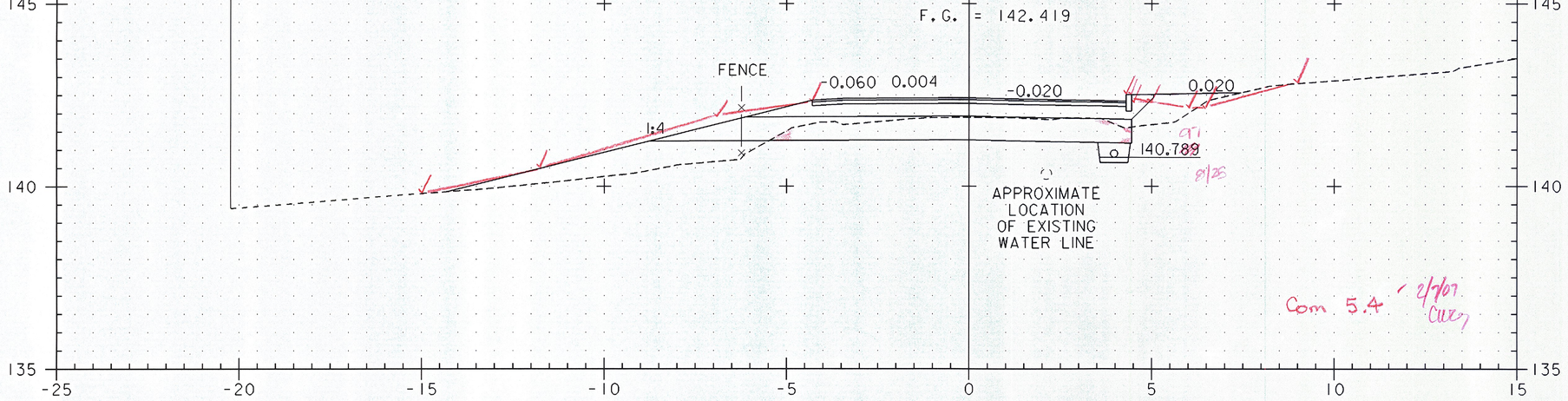

ah 14+860

0 2 4 6 8 10

SCALE IN METERS

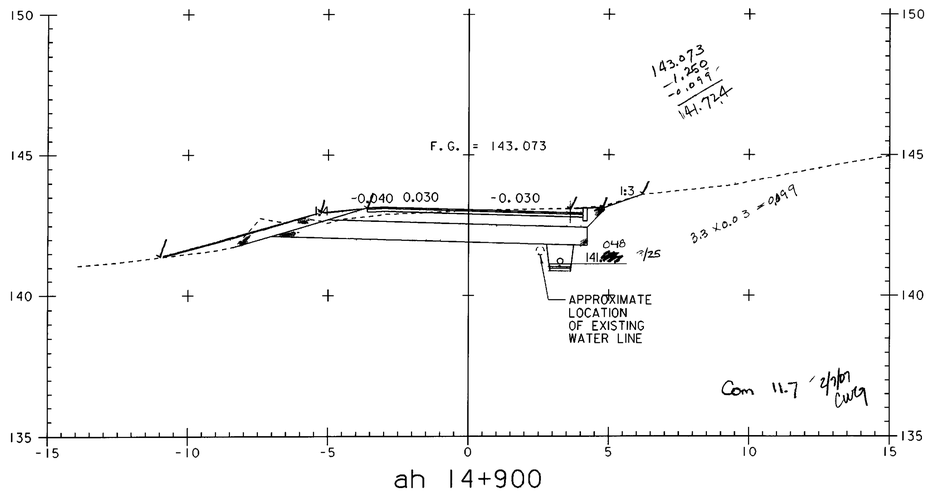

ah 14+900

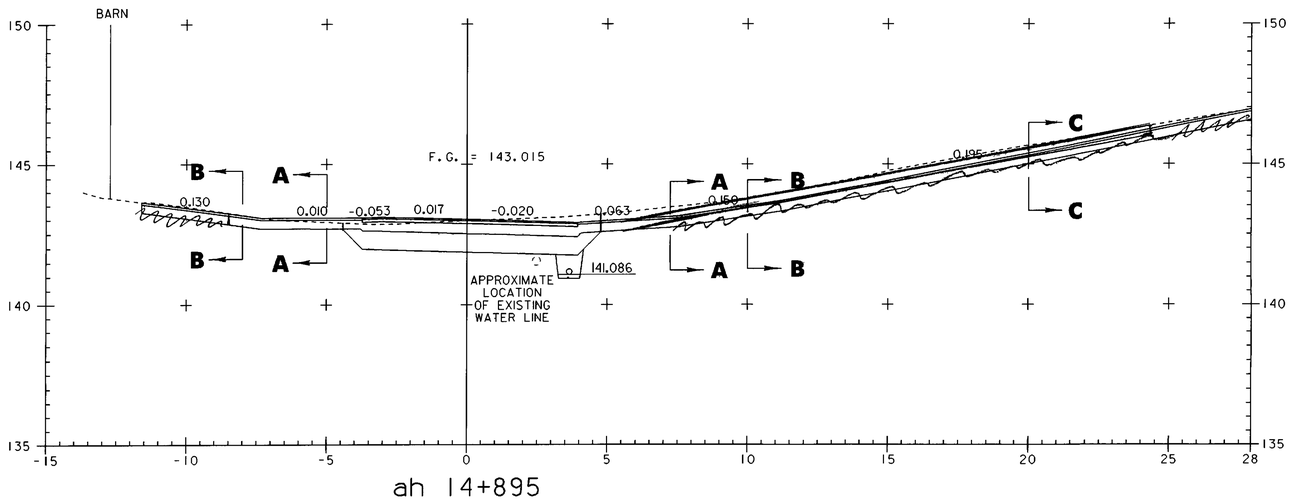

ah 14+895

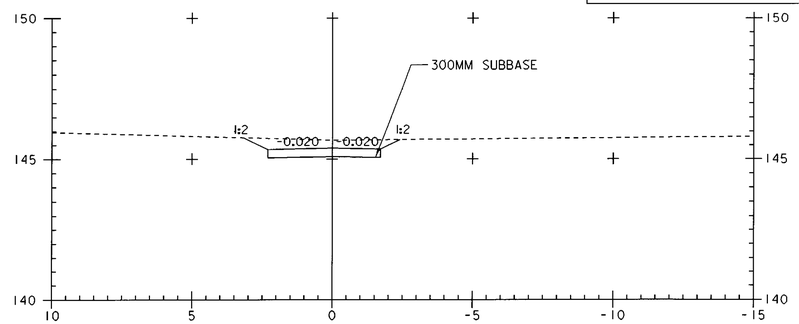

DRIVE AT 14+895 RT
C - C

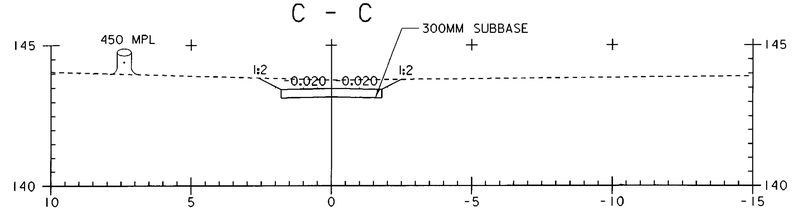

DRIVE AT 14+895 RT
B - B

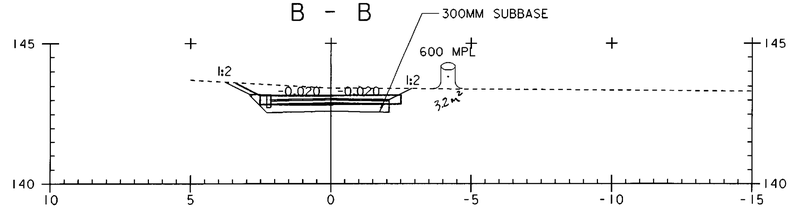

DRIVE AT 14+895 RT
A - A

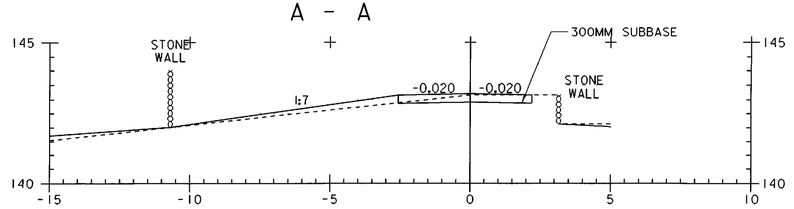

DRIVE AT 14+895 LT
B - B

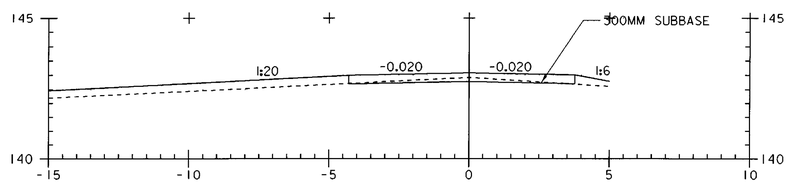

DRIVE AT 14+895 LT
A - A

0 2 4 6 8 10
SCALE IN METERS

PROJECT NAME:	HIGHGATE - FRANKLIN
PROJECT NUMBER:	STP RS 0301(1) SA
FILE NAME: ...85c060\design\dc060x11.dgn	PLOT DATE: 09-MAY-2005
PROJECT LEADER: DELLASANTA	DRAWN BY: SQUAD B
DESIGNED BY: SQUAD B	CHECKED BY: SQUAD B
IPARM FILE NAME: dc060x1121.i	SHEET 445 OF 450

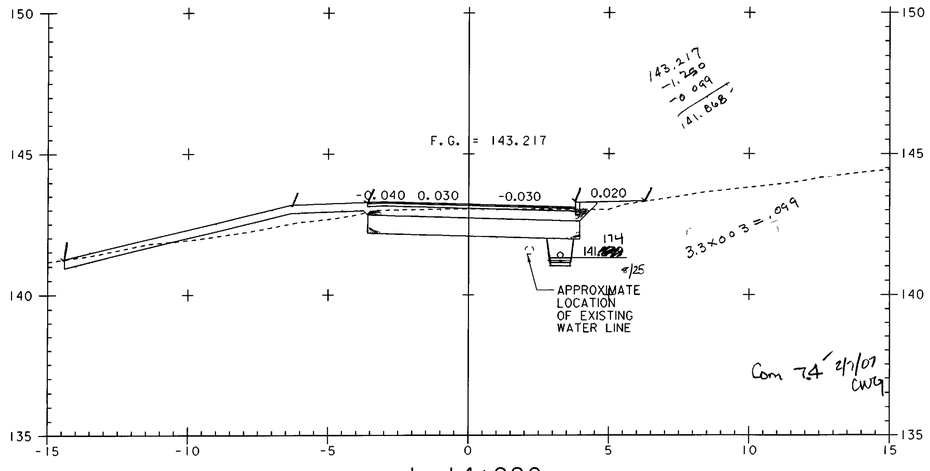

ah 14+920

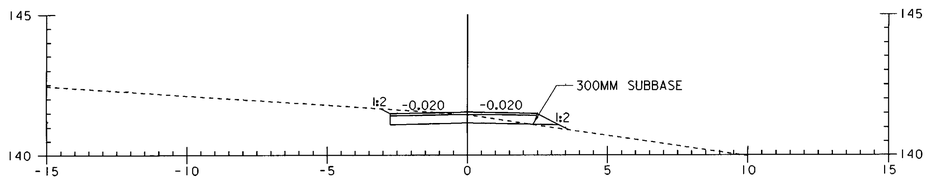

DRIVE AT 14+925 LT
B - B

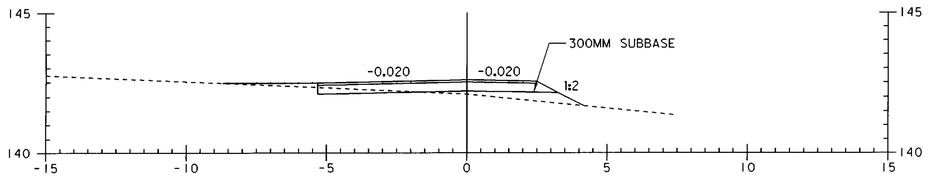

DRIVE AT 14+925 LT
A - A

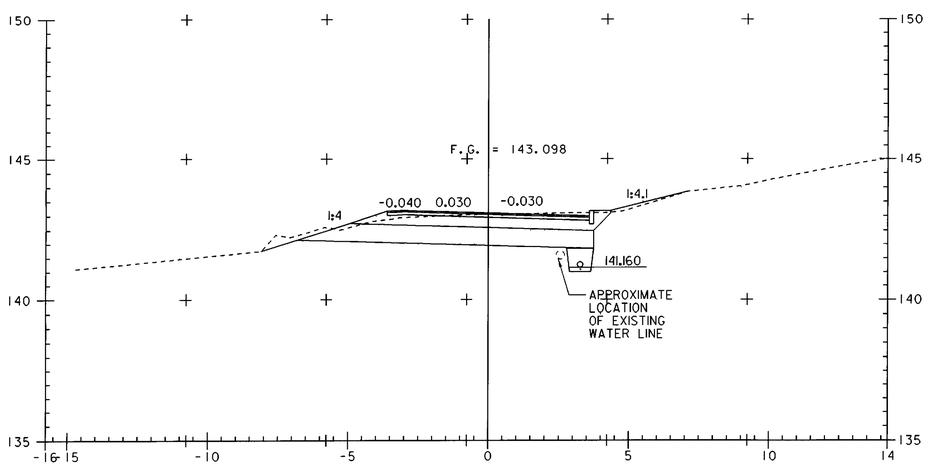

ah 14+903

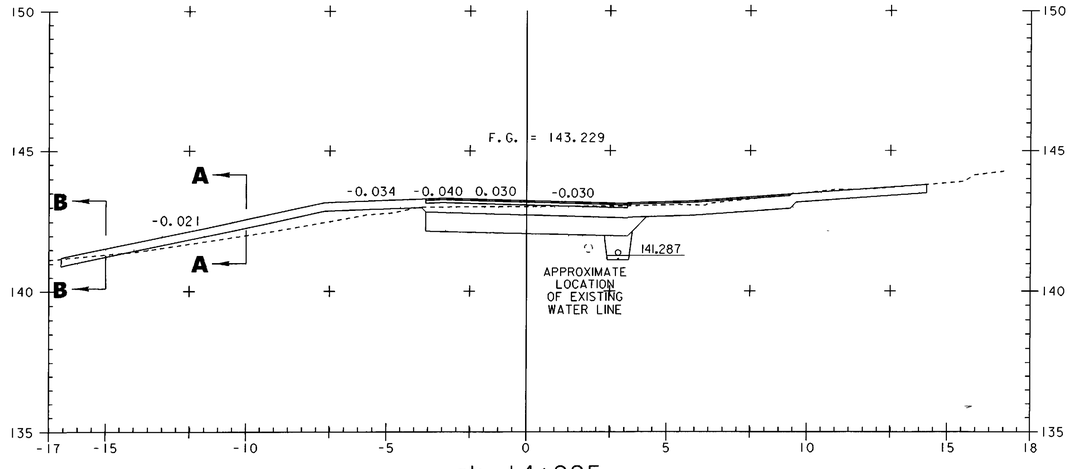

ah 14+925

364
307

0 2 4 6 8 10
SCALE IN METERS

364
307

PROJECT NAME:	HIGHGATE - FRANKLIN
PROJECT NUMBER:	STP RS 0301(1) SA

FILE NAME: ...85c060\design\dc060xll.dgn		PLOT DATE:	09-MAY-2005
PROJECT LEADER:	DELLASANTA	DRAWN BY:	SQUAD B
DESIGNED BY:	SQUAD B	CHECKED BY:	SQUAD B
IPARM FILE NAME:	dc060xll22.i	SHEET	446 OF 450

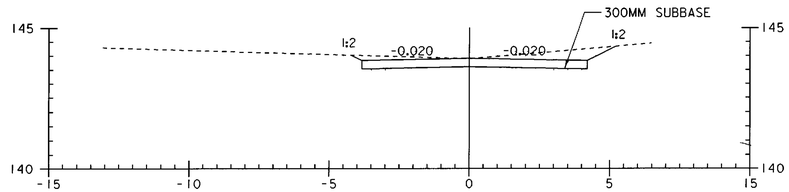

DRIVE AT 14+927 RT
C - C

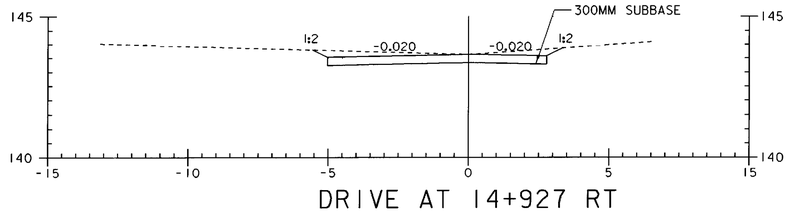

DRIVE AT 14+927 RT
B - B

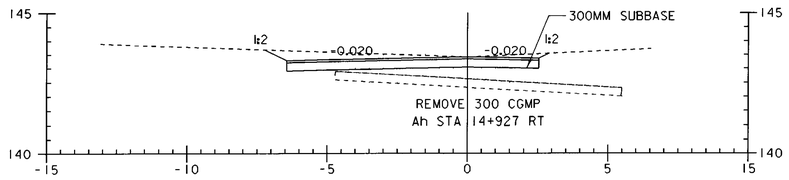

DRIVE AT 14+927 RT
A - A

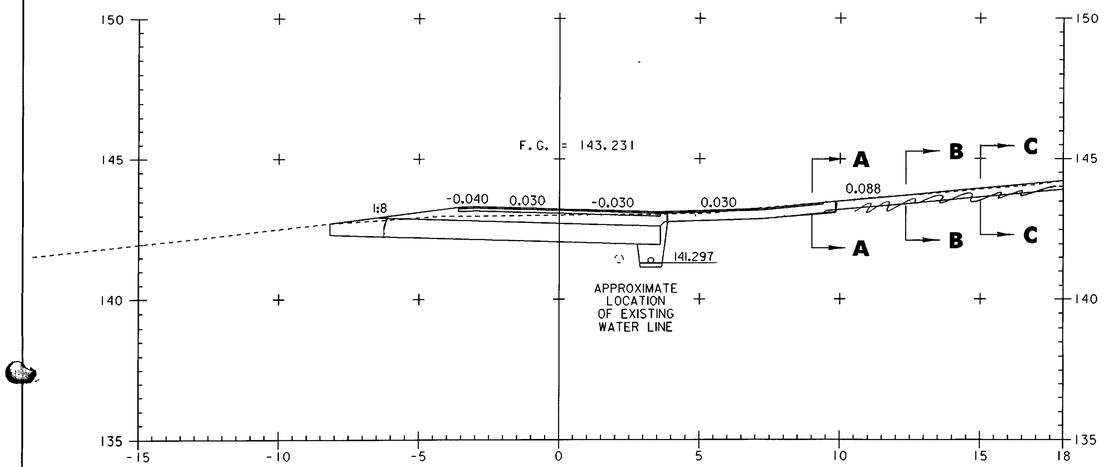

ah 14+927

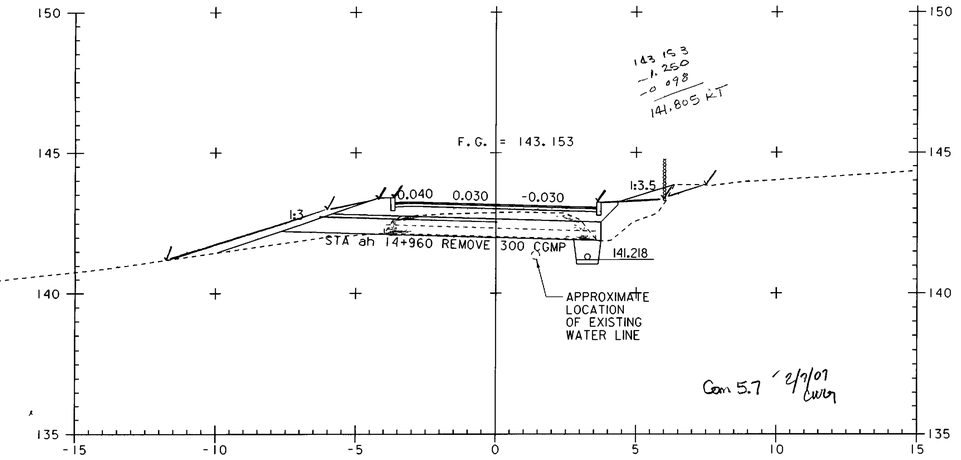

ah 14+960

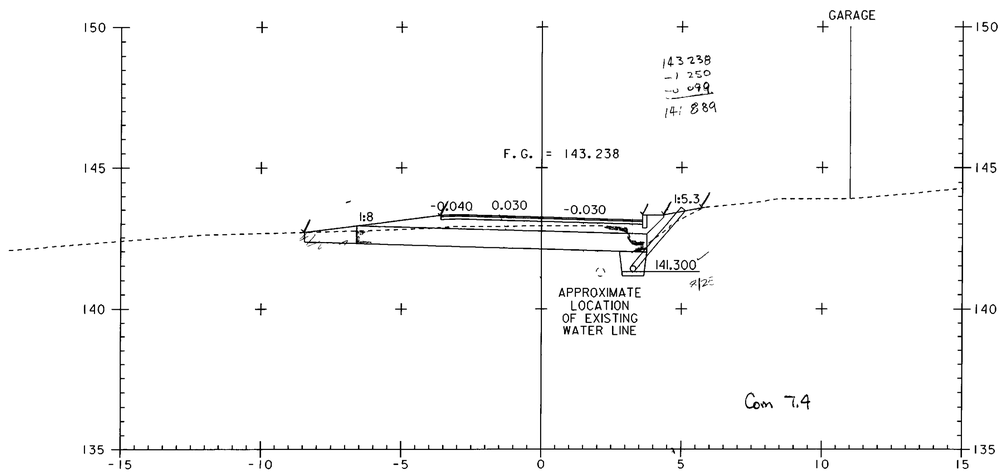

ah 14+940

0 2 4 6 8 10
SCALE IN METERS

PROJECT NAME:	HIGHGATE - FRANKLIN
PROJECT NUMBER:	STP RS 0301(1) SA
FILE NAME: ...85c060\design\dc060x11.dgn	PLOT DATE: 09-MAY-2005
PROJECT LEADER: DELLASANTA	DRAWN BY: SQUAD B
DESIGNED BY: SQUAD B	CHECKED BY: SQUAD B
IPARM FILE NAME: dc060x1123.i	SHEET 447 OF 450

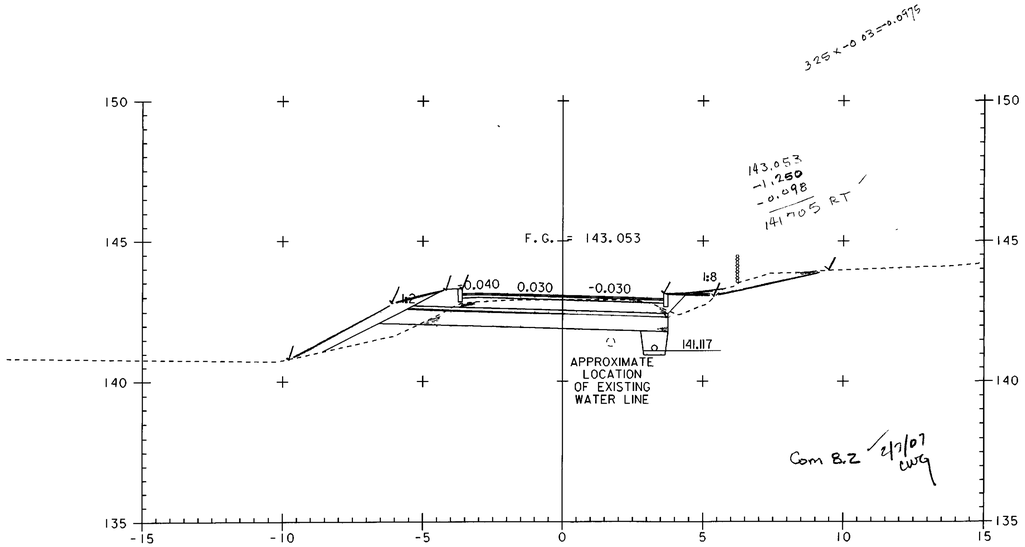

ah 14+980

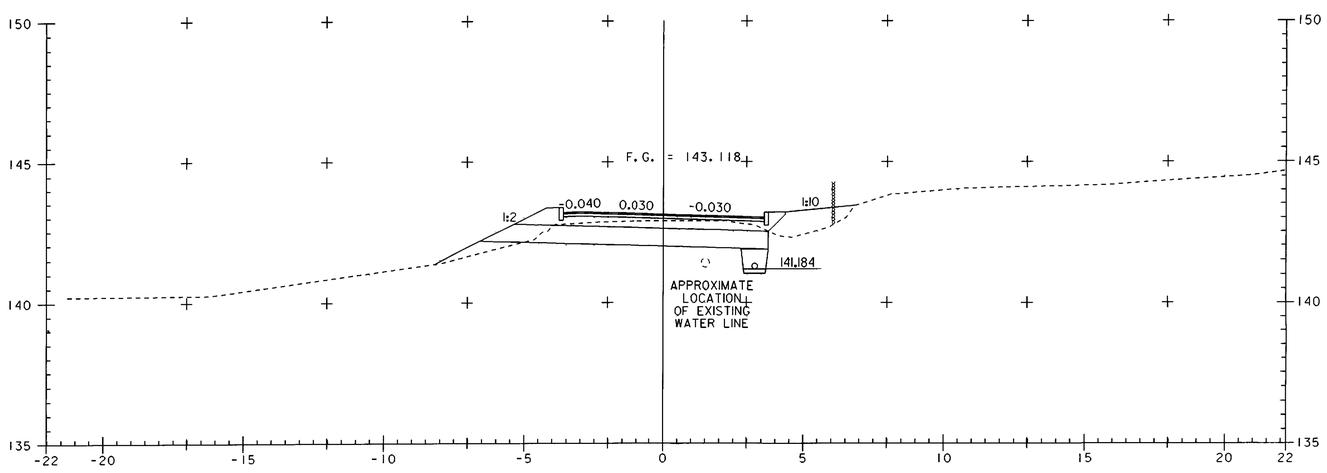

ah 14+967

0 2 4 6 8 10
SCALE IN METERS

PROJECT NAME:	HIGHGATE - FRANKLIN
PROJECT NUMBER:	STP RS 0301(1) SA
FILE NAME: ...85c060\design\dc060xll.dgn	PLOT DATE: 09-MAY-2005
PROJECT LEADER: DELLASANTA	DRAWN BY: SQUAD B
DESIGNED BY: SQUAD B	CHECKED BY: SQUAD B
IPARM FILE NAME: dc060xll24.i	SHEET 448 OF 450

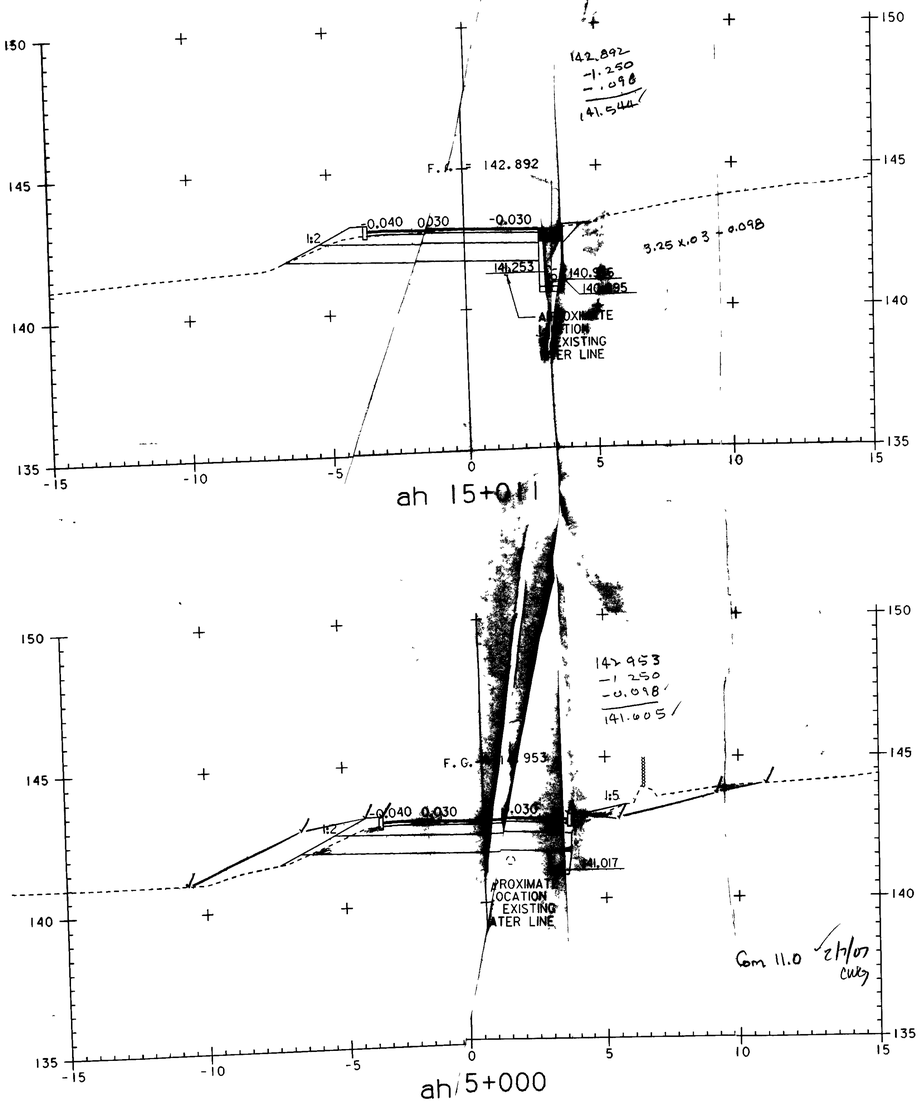

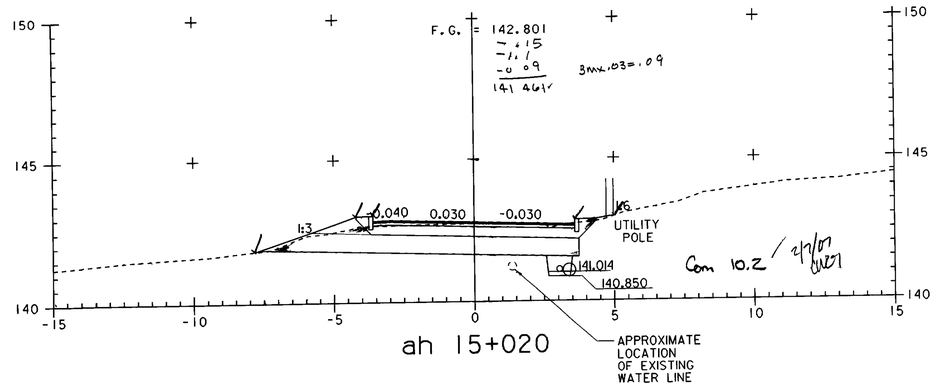

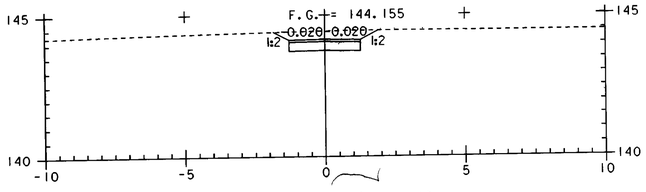

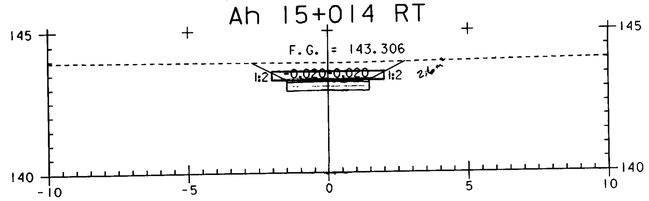

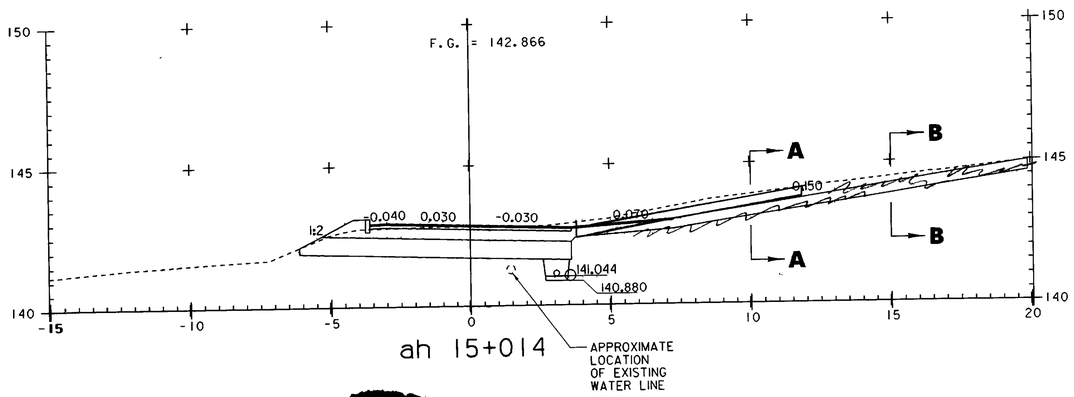

0 2 4 6 8 10
SCALE IN METERS

PROJECT NAME:	HIGHGATE - FRANKLIN
PROJECT NUMBER:	STP RS 0301(1) SA
FILE NAME: ...85c060\design\dc060x11.dgn	PLOT DATE: 09-MAY-2005
PROJECT LEADER: DELLASANTA	DRAWN BY: SQUAD B
	CHECKED BY: SQUAD B
	SHEET 449 OF 450

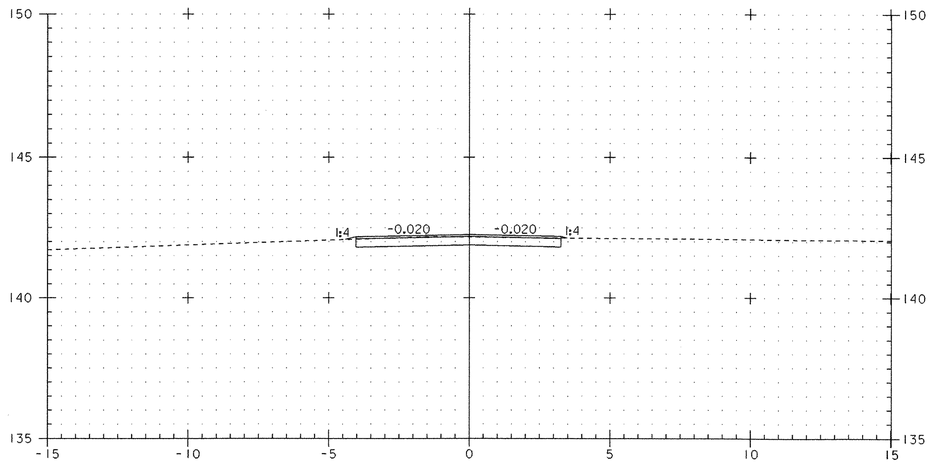

SECTION A- A
DRIVE @ ah 15+028 LT

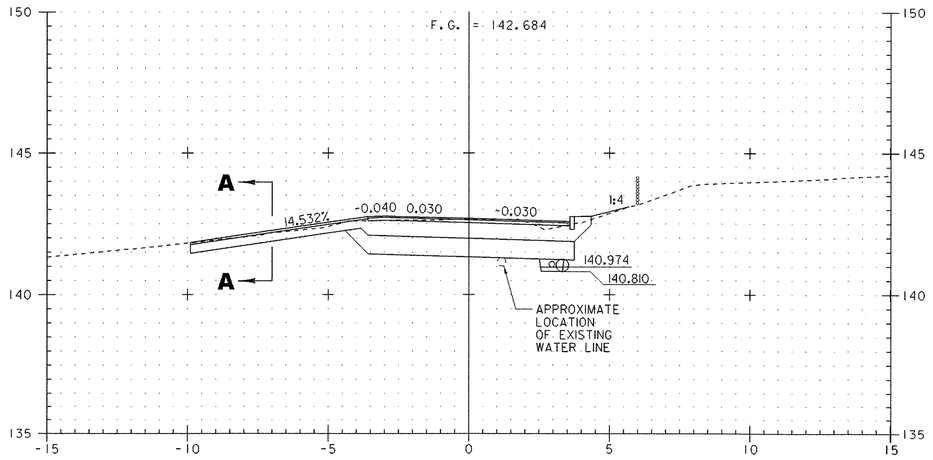

ah 15+028

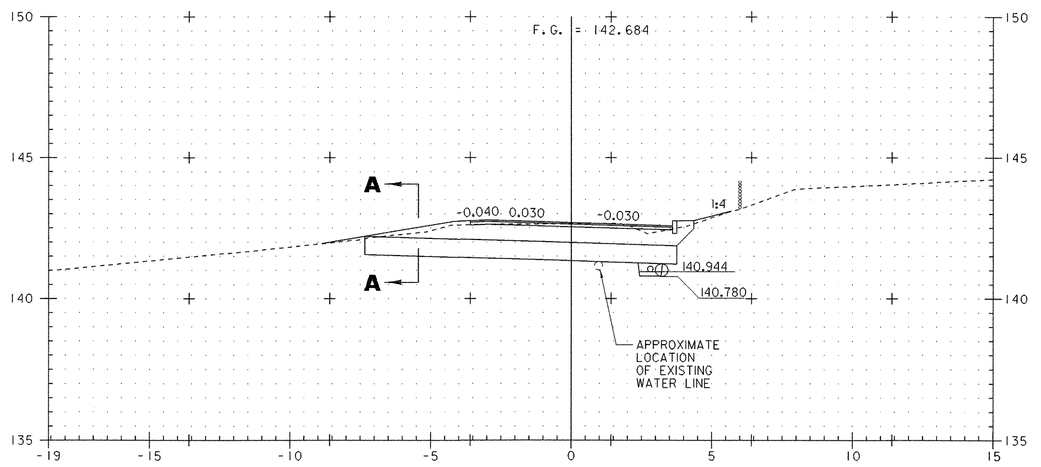

ah 15+034
END PROJECT
STP RS 0301(1) SA
BEGIN PROJECT
STP 0301(18)

0 2 4 6 8 10
SCALE IN METERS

PROJECT NAME:	HIGHGATE - FRANKLIN
PROJECT NUMBER:	STP RS 0301(1) SA
FILE NAME: ...85c060\design\dc060x11.dgn	PLOT DATE: 09-MAY-2005
PROJECT LEADER: DELLASANTA	DRAWN BY: SQUAD B
DESIGNED BY: SQUAD B	CHECKED BY: SQUAD B
IPARM FILE NAME: dc060x1126.i	SHEET 450 OF 450

STATE OF VERMONT
AGENCY OF TRANSPORTATION

DRAINAGE DETAIL SHEET

VAOT Metric

DRAINAGE STRUCTURES

STATION km + m	STATION km + m	POS.	ASKEW	INLET/OUTLET TYPE INLET	INLET/OUTLET TYPE OUTLET	DITCH IN	DITCH OUT	PIPE ARCH SPAN mm	PIPE ARCH RISE mm	PIPE ARCH L m	PIPE D mm	PIPE L m	ALLOWABLE OPTIONS PCCSP mm	CAAP mm	RCP CL	CSP mm	CPEP mm	PCCSP PI mm	PIPE ELBOW NO. DEG	ES EA	CB EA	PRCCB	DEPTH DI mm	GRANULAR UNDER STONE FILL	EARTH BORROW	DI GRATE TYPE	CHAN ELEV EA	CRM m³	TRENCH EXCAVATION EARTH m³	TRENCH EXCAVATION ROCK m³	COMM EXC m³	UNC CHAN EXC m³	STRUCT EXCAV m³	GRAN BKFILL STRUCT m³	GRAN BORR m³	EROS MATT m³	STONE FILL m³	STONE FILL TYPE	MARKER POSTS LT ea	MARKER POSTS RT ea	SLEEVE FOR UTILITY	IRRIGATION BOARD	REMARKS
HIGHGATE																																											
1+000		LT	(70m)								450'	9.8'					X												5'														DRIVE CULVERT
1+013		℄	81°29'41"RT	DI							450'	24.8'					X					1'		14'					22'	9.4'							4.6'						
1+115 RT ~ 1+118 LT																													75'	14.8'				70.8'							15"	1.29'	DU HAMEL WATERLINE SLEEVE
1+071.878 ~	1+086.700	RT									450'	0'				X																											DRIVE AND CULVERT ELIMINATED
1+197.539 ~	1+171.190	RT									450'	0'				X																											CULVERT ELIMINATED
1+180.0 RT ~	1+188.0 LT			ES							450'	23.8'					X			1'																42.1'						ADDED CULVERT
1+193.93 ~	1+260	RT									450'	0'				X																											CULVERT ELIMINATED
1+339.073 ~	1+349.314	LT									450'	10.7'				X													6'					1.7'									DRIVE CULVERT
1+407.263 ~	1+420.325	RT									450'	0				X																											CULVERT ELIMINATED
1+423.900 ~	1+433.655	RT									450'	0'				X																											CULVERT ELIMINATED
1+471.0 ~	1+483.0	LT									450'	12.2'				X													6'					2.9'									DRIVE CULVERT
1+555.5 ~	1+567.0	LT									450'	16.5'				X													11'					5.2'									DRIVE CULVERT
1+610		℄																											41'														REMOVE EXISTING 460MM CGMP
1+615		℄	43°00'00"LT	ES							900'	24.4'					X			1'				60'					85'								33.1'						
1+617.40 ~	1+634.0	RT									450'	16.6'				X													5'														RELOCATED FIELD DRIVE
1+763		℄	39°12'33"LT	DI							450'	19.8'					X					1'		25'					71'					26.6'		8.4'						
1+765		℄																											24'														REMOVE EXISTING 380 CGMP
1+853		℄	82°49'21"LT	ES							450'	18.3'					X			1'				54'					22'					26.3'		18.4'						
1+914.767 ~	1+925.148	LT									450'	0'				X																											CULVERT ELIMINATED
2+490.00 ~	2+512.50	RT									450'	23.5'				X													23'					19.5'									DRIVE CULVERT
2+636		℄		CH	CH						750'	21.8'					X							49'	216.3'			1.8'	89'					31.4'		14.6'				20.1'		REMOVE EXISTING 460 CMP/SLEEVE AND UNDERDRAIN INSTALLED
2+843		℄																											67'					12.8'						20.1'		ADDED SLEEVE
2+847		℄	82°04'47"LT	ES							750'	18.4'					X			1'				39'					64'					35.2'		14.4'						REMOVE EXIST 380 CMP
3+031.285 ~	3+048.064	TR									450'	16.8'				X													48'					21.1'									DO PUIS DRIVE CULVERT
3+033.447 ~	3+045.965	RT																																									REMOVE EXIST DRIVE CULVERT
3+062.143 ~	3+074.791	LT									450'	14.6'				X													7'					7.6'									REMOVE EXIST CGMP & PLASTIC PIPES
3+348		℄		ES							600'	21.3'					X			1'				49'					30'							14.6'						REMOVE EXIST 300x900 CGMP
3+348		℄																																									
3+486		℄	75°37'27"LT	CH	CH						900'	22.0					X							90'	42.5'			2.0'	124'					37.3'		48.8'						
3+488		℄																											48'														REMOVE EXIST 600 ACCGMP
3+765.755 ~	3+776.568	LT									450'	12.2'				X													4'					6.0'									DRIVE CULVERT
3+770.340 ~	3+773.440	LT																											1'														REMOVE EXIST 205 FIELD CULVERT
3+838.491 ~	3+850.923	RT									450'	12.2'				X													2'					7.6'									DRIVE CULVERT
3+854		℄																											7'														REMOVE EXIST 380 CMP
4+083.769 ~	4+093.699	RT									450'	9.8'				X													8'					5.9'									DRIVE CULVERT
4+118.500 ~	4+131.000	RT									450'	12.2'				X													6'					6.8'									DRIVE CULVERT
4+340.000 ~	4+380.520	RT		DI							450'	40.3'				X						1'							30'	40.9'				50.7'								
4+378.00 ~	4+395.745	LT									450'	17.1'				X														5.1'				7.3'									DRIVE CULVERT
TELEPHONE CONDUITS																																												
3+385 RT & Cassidy Rd																																												
2+685 ~	2+830	LT																																										
4+660		℄																																										
4+232 ~	4+286.2	RT																																										
4+286.2 ~	4+390	RT																																										
TOTALS											450	214.7'				CSP						3'		380'	68.8'			38'	1293'	137.5'				435.3'		199.0'					55.2'	1.29'	
											450	98.5'					CPEP		2'																								
											600	21.3'					CPEP		1'																								
											750	40.2'					CPEP		1'																								
											900	46.4'					CPEP		1'																								

TELEPHONE CONDUITS
493'
1460'
183'
56.0'
1050'
3742m Ty Bx I.C. Pg. 33

483m x .84m x .96m (D) =	390'
145m x .84m (W) x .96m (D) =	1170'
REFER TO PROJECT X-SECTION SHT # 345 =	310'
FROM INSPECTOR'S REPORT 8-14-06	200' 26.16'
	310' 40.7'

PROJECT NAME : HIGHGATE - FRANKLIN	PROJECT NO. : STPRS 0301(1) SA
DESIGN FILE NAME:	
IPARM FILE NAME: DRAINAGE	PLOT DATE: 04-FEB-2005
SURVEYED BY:	SURVEY DATE:
SQUAD LEADER:	DRAWN BY:
	SHEET: 1 OF 3

H.H. - 3-22-05

HSI - Drainage

STATE OF VERMONT
AGENCY OF TRANSPORTATION

DRAINAGE DETAIL SHEET

VAOT Metric

DRAINAGE STRUCTURES

STATION km + m	STATION km + m	POS.	ASKEW	INLET/OUTLET TYPE INLET	INLET/OUTLET TYPE OUTLET	DITCH IN	DITCH OUT	PIPE ARCH SPAN mm	PIPE ARCH RISE mm	PIPE ARCH L m	PIPE D mm	PIPE L m	ALLOWABLE OPTIONS PCCSP mm	CAAP mm	RCP CL	CSP mm	CPEP mm	PCCSP PI mm	PIPE ELBOW NO DEG	ES EA	CB EA	PRCCB	DEPTH DI mm	GEOTEXTILE UNDER STONE FILL	EARTH BORROW	DI GRATE TYPE	CHAN ELEV EA	CRM m³	TRENCH EXCAVATION EARTH m³	TRENCH EXCAVATION ROCK m³	COMM EXC m³	UNC CHAN EXC m³	STRUCT EXCAV m³	GRAN BKFILL STRUCT m³	GRAN BORR m³	EROS MATT m³	STONE FILL m³	STONE FILL TYPE	MARKER POSTS LT ea	MARKER POSTS RT ea	SLEEVE FOR UTILITY	INSULATED BOARD	REMARKS
FRANKLIN																																											
4+410.728	4+426.844	RT									450'	14.6'				X													21'					14.7'									DRIVE CULVERT
4+492		℄		ES							600'	24.6'					X			1'						20'	33.4'			71'					37.0'			14.1'						CULVERT EXTENDED TO ELIM GUARD RAIL
4+660		℄																																									ADDED SLEEVE FOR UTILITY (TELEPHONE)
4+840.0	4+879.624	RT		DI							450'	40'					X					1'							58'															
4+881.910		℄																											10'														REMOVE EXIST 380 CGMP
4+882		℄																											14'													24.4'		ADDED SLEEVE TO ACCOMODATE FIELD DRAIN
5+022		℄																											25'														REMOVE EXIST 380 CGMP
5+027		℄	72°22'16"LT	CH	CH						1050'	20.4'	X											105'	52.4'			2.2'	155'					76.2'			47.0'						
5+156		℄		ES							900'	22.0'					X			1'				65'					63'					42.6'			27.0'						
5+162		℄																											13'														REMOVE EXIST 380 CGMP
5+162		℄																											65'					14.9'									ADDED SLEEVE (FURNISHED BY OWNERS) FOR FIELD DRAIN
5+155.718	5+164.296	LT																											13'														REMOVE EXIST 380 CGMP
5+257.0	5+269.2	RT									450'	12.2'				X													5'														DRIVE CULVERT
5+365.5	5+377.7	RT									450'	12.2'				X													5'														ADDED FIELD DRIVE & CULVERT
5+589.0	5+600.0	RT									450'	11.0'				X													18'					7.8'									ADDED FIELD DRIVE & CULVERT
5+725.0	5+744.5	LT									450'	19.5'				X													25'					18.3'									ADDED FIELD CULVERT
5+753.9	5+766.1	RT									450'	12.2'				X																		7.2'									ADDED FIELD DRIVE & CULVERT
5+760.63	5+766.73	LT																																										REMOVE EXIST 300 CGMP/REMOVED WITH COMMON EXC.
5+843		℄	56°10'08"LT	ES							600'	24.0'					X			1'				8'	8.5'				26'					29.4'			7.2'						
5+848		℄																											12'														REMOVE EXIST 300 ACCGMP
6+140.8	6+153.5	LT									450'	12.5'				X													4'					8.3'									ADDED FIELD DRIVE & CULVERT
6+145.503	6+153.988	RT									450'	12.2'				X													4'					7.6'									DRIVE CULVERT
6+322		℄	79°36'24"LT	CH	CH						900'	24.4'					X							63'	22.5'			2.0'	80'					65.5'			23.4'						
6+323.438		℄																											6'														REMOVE EXIST 360 CGMP
6+326.0RT	6+333.0LT																												58'					27.2'							30.5'		SLEEVE FOR FIELD DRAIN / PER ROW AGREEMENT
6+509.0	6+521.0	LT									450'	12.2'				X													10'					14.8'									DRIVE CULVERT
6+538.5	6+553.7	LT									450'	15.2'				X													19'					21.6'									DRIVE CULVERT
6+562.763		℄																											8'														REMOVE EXIST 460 ACCGMP
6+566		℄	47°50'26"	CH	CH						1050'	35.1'	X											153'	51.5'			2.72'	257'					111.0'			67.6'						
6+647.5	6+668.5	LT									450'	21.0'				X													16'					13.8'									DRIVE CULVERT / REMOVE EXIST 300 CGMP
6+765.5	6+781.0	LT									450'	15.2'				X													4'	3.7'				7.4'									DRIVE CULVERT
6+832.445	6+850.00	LT									450'	18.3'				X													9'					9.2'									DRIVE CULVERT
6+997.1	7+012.2	LT									450'	15.1'				X													12'					6.5'									DRIVE CULVERT
7+161		℄																											9'														REMOVE EXIST 300 ACCGMP
7+240		℄									450'	18.3'					X			1'									11'					16.8'									ADDED CULVERT
7+243		℄																											12'														REMOVE EXIST 300 ACCGMP
7+306		℄		CH	CH						900'	18.3'					X							204'	27.1'			2.0'	301'					47.3'			109.4'						
7+533		℄																											16'														REMOVE EXIST 460 ACCGMP
7+540		℄		DI							600'	16.8'					X					1'		17'	13.1'				69'					31.7'			5.3'						
7+608.912	7+621.561	LT																																										REMOVE EXIST 300 ACCGMP
7+636		℄		DI							600'	15.9'					X					1'		8'	32.3'				56'					24.9'			1.3'						
7+663		℄																											1'														REMOVE EXIST 300 ACCGMP
TOTALS											450	203.4'				CSP						3'		643'	246.8'			8.92'	1961'	3.7'				661.7'			302.3'				54.9'		
											450	58.3'					CPEP			1'																								
											600	81.3'					CPEP			2'																								
											900	64.7'					CPEP			1'																								
											1050	55.5	RCCP																																

PROJECT NAME : HIGHGATE - FRANKLIN	PROJECT NO. : STP RS 0301(1)SA
DESIGN FILE NAME:	
IPARM FILE NAME: DRAINAGE	PLOT DATE: 04-FEB-2005
SURVEYED BY:	SURVEY DATE:
SQUAD LEADER:	DRAWN BY:
	SHEET: 2 OF 3

STATE OF VERMONT
AGENCY OF TRANSPORTATION

DRAINAGE DETAIL SHEET

VAOT Metric

DRAINAGE STRUCTURES

STATION km + m	STATION km + m	POS.	ASKEW	INLET/OUTLET TYPE: INLET	OUTLET	DITCH: IN	OUT	PIPE ARCH: SPAN mm	RISE mm	L m	PIPE: D mm	L m	ALLOWABLE OPTIONS: PCCSP mm	CAAP mm	RCP CL	CSP mm	CPEP mm	PCCSP PI mm	PIPE ELBOW NO DEG	ES EA	CB EA	PRCCB	DEPTH DI mm	GRANULAR UNDER STONE FILL	EARTH BORROW	DI GRATE TYPE	CHAN ELEV EA	CRM m³	TRENCH EXCAVATION: EARTH m³	ROCK m³	COMM EXC m³	UNC CHAN EXC m³	STRUCT EXCAV m³	GRAN BKFILL STRUCT m³	GRAN BORR m³	EROS MATT m³	STONE FILL: m³	TYPE	MARKER POSTS: LT ea	RT ea	SLEEVE FOR UTILITY	INSULATION BOARD	REMARKS
FRANKLIN																																											
7+800		℄		DI							750'	16.2'					X					1'		14'	33.1'				64'					29.5'			3.9'						REMOVE EXIST 300 CGMP
7+810		℄																											12'														REMOVE EXIST 300 CGMP
7+833		℄																											8'														
7+920		℄		DI							600'	18.3'					X					1'		8'	31.2'				52'					20.4'			1.3'						
8+052.4	8+070.7	LT									450'	18.3'				X													18'					14.8'									DRIVE CULVERT / REMOVE EXIST 205 CIP
8+086		℄	86°26'29"R								450'	19.8'					X							34'	27.0'				49'					18.4'			10.3'						REMOVE EXIST 380 RCP
8+108.430	8+120.060	LT																											12'														REMOVE EXIST 380 RCP
8+303.930		℄		DI							600'	19.8'					X					1'		8'	51.3'				89'					28.9'			1.3'						
8+307.675	8+316.281	LT																											8'														REMOVE EXIST 460 CGMP
8+347.2	8+359.4	LT									450'	12.2'				X													16'					10.7'									DRIVE CULVERT
8+410.6	8+425.8	LT									450'	15.2'				X													12'					14.4'									REMOVE EXIST 300 CGMP
8+455		℄		CH							750'	22.9'					X							100'	18.4'			0.9'	90'	2.5'				42.4'			44.1'						REMOVE EXIST 460 CGMP
8+809.000	8+818.000	RT									450'	9.1'				X													5'					7.5'									DRIVE CULVERT
8+853.649	8+865.862	LT									600'	12.2'					X												12'														CPEP PLACED IN PLACE OF CSP
											450'	12.2'				X																											OVERFLOW PIPE PLACED BESIDE 600 MM CPEP
8+758.936	8+770.452	RT									450	12.2'				X													1'					8.9'									
9+230	9+249	RT		DI							450'	18.3'					X					1'							21'					18.0'									ADDED CULVERT / NB & WEBSTER ROAD
9+241		℄																											17'														REMOVE EXIST 610 CGMP
9+249 (10m RT to 16m LT)				ES							450'	6.1'					X			1'									13'					9.5'									ADDED CULVERT / NB & WEBSTER ROAD
9+250		℄	85°53'21"LT	DI	CH						750'	42.6'					X					1'						0.9'	101'					66.9'									
9+258		℄																											29'														REMOVE EXIST 610 ACCGMP
9+260		RT		ES							450'	3.1'					X			1'																								ADDED CULVERT / NB & WEBSTER ROAD
9+263	9+270	RT		ES							450'	6.1'					X			1'									6'														ADDED CULVERT / NB & WESTER ROAD
9+267.634		℄	54°47'34"LT	DI							450'	13.1'					X*					1'							27'					25.4'									*PAID AS OPTION B-B
14+759		℄																											24'														REMOVE EXIST 460 CGMP
14+800		℄		DI							450'	15.2'					X					1'		15'					27'					20.7'			4.4'						
14+800	14+858	RT		DI							450'	57.6'					X					1'							34'					33.0'									
14+802.242	14+809.578	LT																											5'														REMOVE EXIST PIPE
14+851.283	14+856.947	RT																											8'														REMOVE EXIST 300 CMP
14+921.900	14+932.000	RT																																										REMOVE EXIST 300 CGMP
14+960		℄																																										REMOVE EXIST 300 CMP
15+011	15+034	RT		DI							450'	22.0'	X									1'							25'					23.0'									
HANNA ROAD																																												
WELKEE DRIVE											600'	12.2'				X																		19.7'			10.1'						ADDED DRIVE CULVERT
GAGNE DRIVE											600'	12.2'					X																											ADDED DRIVE CULVERT
TH# 24																																												
21+007.951		LT		DI							450'	28.1'					X					1'							6'	37.7'				34.0'									
TH# 15																																												
22+070		℄		DI							450'	9.1'					X*					1'								18.9'				13.6'									*PAID AS OPTION B-B
22+070		LT		DI							450'	6.7'					X					1'		7'					8	11.8'				12.6'			1.1'						
TOTALS						THIS SHEET					450	79.2'				CSP						12		186'	161'			1.8	799	709'				472.3'			76.5						
											450	161.0'					CPEP	"AA"		3"																									
											450	22.2'					CPEP	"B-B"																											
											600	62.5'					CPEP																											
											750	81.7'					CPEP																											
	TOTALS ALL SHEETS			450	22.2'	To Bk1 Pg 123	CPEP "B-B"				450	497.3' To Bk1 Pg 103				CSP			CPEPES	6" To Bk1 Pg 139		18' To Bk1-C Pg 141		1209' To Bk1-A Pg 157	476.6' To Bk1 Pg 47			14.52 To Bk1 Pg 147	3503' To Bk1 Pg 58	212.1' To Bk1 Pg 62				1569.3' To Bk1 Pg 66			577.8' To Bk1-A Pg 49						
				450	22.0'	To Bk1 Pg 111	PCCSP				450	317.8' To Bk1 Pg 119					CPEP																											
				600	12.2'	To Bk1 Pg 107	CSP				600	116.5' To Bk1 Pg 127					CPEP			CPEPES 3" To Bk1 Pg 143																									
											750	121.9' To Bk1 Pg 131					CPEP			CPEPES 1" Bk1-C, Pg 145																									
											900	111.1' To Bk1					CPEP			CPEPES 2" Bk1-C, Pg 147																									

To Bk1-C Pg 35 | 110.1' | 1.29 To Bk1-C, Pg 29

PROJECT NAME : HIGHGATE - FRANKLIN	PROJECT NO. : STP BS 0301(1)SA
DESIGN FILE NAME:	
IPARM FILE NAME: DRAINAGE	PLOT DATE: 04-FEB-2005
SURVEYED BY:	SURVEY DATE:
SQUAD LEADER:	DRAWN BY:
	SHEET: 3 OF 3

STATE OF VERMONT
AGENCY OF TRANSPORTATION

ITEM DETAIL SHEET

VAOT Metric

GUARD RAIL

BEGIN STATION km + m	END STATION km + m	POSITION LEFT m	POSITION RIGHT m	END TREATMENT BEGIN EA	END TREATMENT END EA
1+553.0 ~	1+568.2			MTS	
1+568.2 ~	1+598.6		30.5		
1+598.6 ~	1+613.8				MTS
1+621.8				ANCHOR	
1+618.0 ~	1+804.7	187.9 (JNT & EW)			
1+800.9					ANCHOR
1+837.0				ANCHOR	
1+833.2 ~	1+905.6	73.6 (JNT & EW)			
1+901.8					ANCHOR
2+160				ANCHOR	
2+156.2 ~	2+243.8	88.2 (JNT & EW)			
2+243.8 ~	2+259				MTS
2+185.5 ~	2+200.7			MTS	
2+200.7 ~	2+235.5		34.9 (JNT & EW)		
2+231.7					ANCHOR
2+421.4 ~	2+436.6			MTS	
2+436.6 ~	2+497.6		61.6 (JNT & EW)		
2+493.8					ANCHOR
2+447.4 ~	2+462.2			MTS	
2+462.2 ~	2+554.6	92 (JNT & EW)			
2+550.8					ANCHOR
2+609.3				ANCHOR	
2+605.5 ~	2+647.4	42.5 (JNT & EW)			
2+647.4	2+662.16				MTS
2+610.6 ~	2+625.8			MTS	
2+625.8 ~	2+653.5		27.3 (JNT & EW)		
2+649.7					ANCHOR
2+818.0 ~	2+833.2			MTS	
2+833.2 ~	2+856.1	22.9			
2+856.1 ~	2+871.3				MTS
3+100.4	3+115.6			MTS	
3+115.6 ~	3+188.0	73.0 (JNT & EW)			
3+184.2					ANCHOR
3+125.4				ANCHOR	
3+121.6 ~	3+163.5		42.5 (JNT & EW)		
3+163.5 ~	3+178.7				MTS
3+574.2 ~	3+589.4			MTS	
3+589.4 ~	3+669.4		80.0		
3+669.4 ~	3+684.6				MTS
3+575.5 ~	3+590.7			MTS	
3+590.7 ~	3+659.3	68.6			
3+659.3 ~	3+674.5				MTS
SUB-TOTALS		648.7'	276.8'	9 MTS	7 MTS
				5 ANC	7 ANC
		925.5'			
		To Bk 1-A Pg 81		16 MTS · To Bk 1-A Pg 95	
				12 ANCHORS · To Bk 1-A Pg 95	

UNDERDRAIN

BEGIN STATION km + m	END STATION km + m	TYPE	POSITION	DIA. mm	LENGTH m	TRENCH EARTH m³	TRENCH ROCK m³	GEO-TEXTILE m²	FB EA	MKR PST EA
HIGHGATE -										
1+040 ~	1+120	U	LT	200	98'	17'	49.8'	363'	2'	
		C	LT & RT	200	10.1'					
1+040 ~	1+100	U	RT	200	60'	2'	35.2'	198'	1'	
		C	RT	200	2'					
1+640 ~	1+700	U	RT	200	74'	34'	57'	370'		
1+700 ~	1+740	U	RT	200	40'	38'	18.3'	200'	2'	
	1+740	C	℄	200	18.5'					
1+800 ~	1+840	U	RT	200	40'	30'		148'	1'	
		C	RT	200	2'					
1+800 ~	1+840	U	LT	200	40'	39'		154'	1'	
	1+840	C	℄	200	25.6					
1+860 ~	2+000	U	RT	200	140'	108'		560'	1'	
		C	RT	200	2'					
1+860 ~	2+020	U	LT	200	160'	133'		592'	2'	
	1+860	C	℄	200	21.2'					
2+060 ~	2+210	U	RT	200	150'	106'		555'	1'	
		C	RT	200	2'					
2+240 ~	2+340	U	LT	200	90'	70'		333'	1'	
		C	LT	200	14'					
2+240 ~	2+430	U	RT	200	195'	169'		780'	1'	
		C	RT	200	2'					
2+530 ~	2+580	U	RT	200	50'	49'		200'	1'	
		C	RT	200	2'					
2+530 ~	2+580	U	LT	200	50'	54'		200'	1'	
	2+530	C	℄	200	16'					
2+660 ~	2+800	U	LT	200	141'	184'		634'	1'	
		C	LT	200	2'					
2+860 ~	2+960	U	LT	200	100'	76'		370'		
	2+860	C	LT	200	4'					
2+860 ~	2+960	U	RT	200	100'	72'		370'	1'	
		C	RT	200	5'					
2+960 ~	3+060	U	LT	200	100'	91'		370'	2'	
		C		200	15'					
		C		150	8.1'					
2+960 ~	3+120	U	RT	200	160'	124'		592'	1'	
		C		200	23'					
		C		150	4.3'					
3+180 ~	3+244	U	LT	200	65'	46'		240'	1'	
		C		200	2'					
SUB-TOTALS		U		200	1,853'	1442'	160.3	7,229'	21'	
		C		200	168.4'					
		C		150	12.4'					

BEGIN STATION km + m	END STATION km + m	POSITION LEFT m	POSITION RIGHT m	REMARKS

BEGIN STATION km + m	END STATION km + m	POSITION LEFT m	POSITION RIGHT m	REMARKS

BEGIN STATION km + m	END STATION km + m	POSITION LEFT m	POSITION RIGHT m	REMARKS

PROJECT NAME : HIGHGATE-FRANKLIN

PROJECT NO. : STP.RS 0311(1)SA

DESIGN FILE NAME:
IPARM FILE NAME: UNDERDRAIN
SURVEYED BY: & GUARD RAIL
SQUAD LEADER:

PLOT DATE: 26-DEC-2006
SURVEY DATE:
DRAWN BY:
SHEET: 1 OF 4

STATE OF VERMONT
AGENCY OF TRANSPORTATION

ITEM DETAIL SHEET

VAOT Metric

GUARD RAIL

BEGIN STATION km + m	END STATION km + m	POSITION LEFT m	POSITION RIGHT m	END TREATMENT BEGIN EA	END TREATMENT END EA

UNDERDRAIN

BEGIN STATION km + m	END STATION km + m	TYPE	POSITION	DIA. mm	LENGTH m	TRENCH EARTH m^3	TRENCH ROCK m^3	GEO-TEXTILE m^2	FB EA	MKR PST EA
HIGHGATE -										
3+380	3+480	U	LT	200	100'	74'		370'	1'	
		C	LT	200	12'					
3+486	3+580	U	LT	200	95'	60'		313'	1'	
		C	LT	200	7'					
3+486	3+600	U	RT	200	118'	77'		437'	1'	
		C	RT	200	2'					
3+680	4+233	U	LT	200	573.1'	796'		2816'	5'	
		C	LT	200	10'					
3+700	4+220	U	RT	200	529.9'	667'		2544'	5'	
		C	RT	200	10'					
4+240	4+300	U	LT	200	60'	1'	47.6'	240'	1'	
		C	LT	200	9'					
4+300	4+491	U	LT	200	180'	13'	134.3'	720'	1'	
		C	LT	200	14.2'					
4+320	4+474	U	RT	200	155'	26'	106.3'	647'	2'	
		C	RT	200	4'					
SUB-TOTALS		U		200	1811'	1714'	288.2	8087'	17'	
		C		200	68.2'					
TRANSFERRED FROM DRAINAGE BK 2										
HIGHGATE -										
1+489.5	1+503.8	C	RT	200	14.3'	8'				PG-36
	2+636	C	℄	200	28.4					PG-74
	2+843	C	℄	150	29'					PG-76
FRANKLIN										
	5+162	C	℄	150	30.5'					PG-157
	6+515	C	LT	150	6			BK 2-A		PG 26
	22+070	U	℄	200	14			17		PG-160
	22+070	C	LT	200	6.1					PG 162
TRANSFERRED FROM DAILY REPORT 10-17-05										
	8+623	C	LT	150	2.6'					
	14+697 3	C	RT	150	2.5'					
	14+949 3	C	RT	150	2.1'					
	14+933	C	RT	150	3.0'					
	15+006.7	C	RT	150	34'					
SUB-TOTALS		C		200	48.8'	8'		17'		
		C		150	79.1'					
		U		200	14.0'					

BEGIN STATION km + m	END STATION km + m	POSITION LEFT m	POSITION RIGHT m	REMARKS

BEGIN STATION km + m	END STATION km + m	POSITION LEFT m	POSITION RIGHT m	REMARKS

BEGIN STATION km + m	END STATION km + m	POSITION LEFT m	POSITION RIGHT m	REMARKS

PROJECT NAME : HIGHGATE-FRANKLIN

PROJECT NO.: STP RS 0301(1)SA

DESIGN FILE NAME:
IPARM FILE NAME: UNDERDRAIN
SURVEYED BY:
SQUAD LEADER:

PLOT DATE: 26-DEC-2006
SURVEY DATE:
DRAWN BY:
SHEET: 2 OF 4

STATE OF VERMONT
AGENCY OF TRANSPORTATION

ITEM DETAIL SHEET

VAOT Metric

GUARD RAIL

BEGIN STATION km + m	END STATION km + m	POSITION LEFT m	POSITION RIGHT m	END TREATMENT BEGIN EA	END TREATMENT END EA
FRANKLIN -					
5+015.1				ANCHOR	
5+011.3	5+041.8	31.1 (INCL EW)			
5+041.8	5+057.0				MTS
4+999.4	5+014.6			MTS	
5+014.6	5+048.9		34.9 (INCL EW)		
5+045.1					ANCHOR
6+154.3				ANCHOR	
6+150.5	6+219.0	69.7 (INCL EW)			
6+215.2					ANCHOR
6+159.2				ANCHOR	
6+155.4	6+208.7		54.5 (INCL EW)		
6+204.9					ANCHOR
6+882.0	6+897.2			MTS	
6+897.2	6+904.8		10.6 (FACTORED BY 1.4)		
6+904.8	7+360.0		445.8		
7+360.0	7+375.2				MTS
7+518.1				ANCHOR	
7+514.3	7+570.3		58.4		
7+566.5					ANCHOR
7+760.0	7+775.2			MTS	
7+775.2	7+839.0		65.4		
7+835.2					ANCHOR
7+895.1				ANCHOR	
7+891.3	8+460		568.3		
8+460.0	8+475.2				MTS
8+691.8				ANCHOR	
8+688.0	8+757.0		69.8 (INCL EW)		
8+753.2					ANCHOR
8+708.8				ANCHOR	
8+705.0	8+790.0	85.0 (INCL EW)			
8+786.2					ANCHOR
8+884.8	8+900.0			MTS	
8+900.0	9+177.0	278.1			
9+177.0	9+192.2				MTS
8+887.8	8+903.0			MTS	
8+903.0	9+120.0		217.2		
9+120.0	9+135.2				MTS
		463.9'	1524.9'	5 MTS	5 MTS
		1988.8'		7 ANCHOR	7 ANCHOR
		To BK 1A Pg 81		10 MTS - To BK 1A Pg 85	
				14 ANCHORS - To BK 1A Pg 89	

UNDERDRAIN

BEGIN STATION km + m	END STATION km + m	TYPE	POSITION	DIA. mm	LENGTH m	TRENCH EARTH m^3	TRENCH ROCK m^3	GEO-TEXTILE m^2	FB EA	MKR PST EA
FRANKLIN -										
4+900	5+020	U	Rt	200	120'	99'		444'	1'	
		C	Rt	200	5.7'					
5+040	5+140	U	Rt	200	100'	41'		300'	1'	
		C	Rt	200	8.1'					
5+060	5+140	U	Lt	200	80'	37'		240'	1'	
		C	Lt	200	8.1'					
5+160	5+326	U	Lt	200	171.7'	117'		618'	2'	
		C	Lt	200	10.1'					
5+320	5+348	U	Lt-Rt	200	20'	36'		99'	1'	
		C	Lt	200	20.9'					
5+451	5+480	U	Rt	200	40.5'	3'	28.1'	162'	1'	
		C	Rt	200	8.1'					
5+537	5+580	U	Lt	200	53'	4	32.9'	186'	2'	
		C	Rt	200	4'					
5+580	5+598	C	Lt	200	18.3'	3'				
5+780	5+820	U	Rt	200	40'	7'	6.6'	120'	1'	
		C	Rt	200	2'					
5+780	5+820	U	Lt	200	40'	13'	4.2'	120'	1'	
		C	Lt	200	25.4'					
5+980	6+040	U	Lt	200	67.5'	18'	16.9'	229'	1'	
		C	Lt	200	2'					
5+980	6+040	U	Rt	200	60'	16'	16.9'	210'	1'	
	5+980	C	℄	200	15.9'					
6+220	6+280	U	Lt	200	60'	13'	23.7'	210'	1'	
		C	Lt	200	2'					
6+220	6+280	U	Rt	200	60'	17'	26.9'	210'	1'	
		C		200	36.5'					
6+582	7+040	U	Lt	200	458'	124'	161.9'	1511'	3'	
		C	Lt	200	6'					
	6+880	C	℄	200	16.8'	4'				
7+042	7+220	U	Lt	200	178'	111'		623'	2'	
		C	Lt	200	4'					
	7+220	C	℄	200	13.5'	4'				
7+380	7+420	U	Lt	200	40'	14'		108'		
	7+380	C	℄	200	13.4'	2'				
7+420	7+540	U	Lt	200	120'	40'		336'	2'	
		C	Lt	200	4'					
7+540	7+636	U	Lt	200	96'	53'	1.7'	326'	1'	
		C	Lt	200	2'					
		U		200	1804.7'	776'	319.8'	6052'	23'	
		C		200	2268'					

BEGIN STATION km + m	END STATION km + m	POSITION LEFT m	POSITION RIGHT m	REMARKS

BEGIN STATION km + m	END STATION km + m	POSITION LEFT m	POSITION RIGHT m	REMARKS

BEGIN STATION km + m	END STATION km + m	POSITION LEFT m	POSITION RIGHT m	REMARKS

PROJECT NAME : HIGHGATE - FRANKLIN

PROJECT NO. : STP-RS 0301(1)SA

DESIGN FILE NAME:
IPARM FILE NAME: UNDERDRAIN & GUARD RAIL
SURVEYED BY:
SQUAD LEADER:

PLOT DATE: 26-DEC-2006
SURVEY DATE:
DRAWN BY:
SHEET: 3 OF 4

456 - underdrain & Guardrail

STATE OF VERMONT
AGENCY OF TRANSPORTATION

ITEM DETAIL SHEET

VTrans Metric

GUARD RAIL

BEGIN STATION km + m	END STATION km + m	POSITION LEFT m	POSITION RIGHT m	END TREATMENT BEGIN EA	END TREATMENT END EA

UNDERDRAIN

BEGIN STATION km + m	END STATION km + m	TYPE	POSITION	DIA. mm	LENGTH m	TRENCH EARTH m^3	TRENCH ROCK m^3	GEO-Textile m^2	FB EA	MKR PST EA
Franklin -										
7+636	7+800	U	Lt	200	164'	52'		426'	1'	
		C	Lt	200	2'					
7+800	7+920	U	Lt	200	120'	30'	0.9'	312'		
7+920	8+020	U	Lt	200	98'	31'		270'	1'	
		C	Lt	200	2'					
	8+020	C	℄	200	12.4'	1'				
8+120	8+303	U	Lt	200	183'	50'	11.9'	512'	2'	
		C	Lt	200	4'					
8+303	8+372	U	Lt	200	69'	17'	5'	173'	1'	
		C	Lt	200	2'					
	8+372	C	℄	200	12'	2'				
8+480	8+560	U	Lt	200	80'	59'	7'	320'	1'	
		C	Lt	200	2'					
	8+480	C	Lt	200	6.3'					
8+480	8+580	U	Rt	200	100'	70'		360'		
	8+480	C	Rt	200	6.1'	1'				
8+560	8+640	U	Lt	200	80'	59'		296'		
8+580	8+640	U	Rt	200	60'	40'		210'	1'	
		C	Rt	200	2'					
	8+640	C	℄	200	15.5'	3'				
8+746	8+880	U	Rt	200	120'	40'	12.8'	396'	1'	
		C	Rt	200	2'					
	8+746	C	Rt	200	14.1'					
8+800	8+880	U	Lt	200	80'	23'		216'	1'	
		C	Lt	200	2'					
	8+800	C	Lt	200	4.3'	1'				
9+200	9+240	U	Lt	200	40.3'	18'		120'	1'	
		C	Lt	200	2'					
9+200	14+800	U	Rt	200	257'	121'	12.9'	848'	2'	
		C	Rt	200	4'					
	9+200	C	℄	200	13.6'	3'				
9+268	14+660	U	Lt	200	48'	13'		125'		
14+800	14+858	U	Rt	200	58'	39'		215'		
		C	Rt	200	2'					
14+858	14+940	U	Rt	200	82'	54'		271'	1'	
		C	Rt	200	2'					
14+940	15+011	U	Rt	200	71'	47'		249'	1'	
		C	Rt	200	2'					
15+011	15+034	U	Rt	200	23'	11'	1.9'	43'	1'	
		C	Rt	200	2'					
		U		200	1733.3'	785'	52.4'	5362'	15'	
		C		200	1163'					

RWH 12-27-06

BEGIN STATION km + m	END STATION km + m	POSITION LEFT m	POSITION RIGHT m	REMARKS

BEGIN STATION km + m	END STATION km + m	POSITION LEFT m	POSITION RIGHT m	REMARKS

BEGIN STATION km + m	END STATION km + m	POSITION LEFT m	POSITION RIGHT m	REMARKS

SHEET	TOTALS	-					
SHEET	200mm U	200mm C	150mm C	TRENCH EARTH	TRENCH ROCK	GEOTEXTILE FOR U/D	FB EA
1	1853'	168.4'	12.4'	1492'	160.3'	7229'	21'
2	1825'	117.0'	79.1'	1722'	288.2'	8104'	17'
3	1804.7'	226.8'		776'	319.8'	6052'	23'
4	1733.3'	116.3'		785'	52.4'	5362'	15'
TOTAL	7216' ∠ To Bk 1-A Pg 5	628.5' ∠ To Bk 1-A Pg 13	91.5' ∠ To Bk 1-A Pg 9	4725' ∠ To Bk 1 Pg 58	820.7' ∠ To Bk 1 Pg 62	26747' ∠ To Bk 1-A Pg 161	76' To Bk 1-A Pg 17

RWH 02-21-07

PROJECT NAME : HIGHGATE - FRANKLIN
PROJECT NO. : STP RS 0301(1)SA
DESIGN FILE NAME:
IPARM FILE NAME: UNDERDRAIN
SURVEYED BY:
SQUAD LEADER:
PLOT DATE: 26-DEC-2006
SURVEY DATE:
DRAWN BY:
SHEET: 4 OF 4

457-1004

Stone Fill Type II
2.9m (L) x 21m (W) x 75m (D) = 457 m³.

Trench Excavation of Earth - 100%

stone f (SF) 2.9m (L) x 21m (W) x 75m (D) = 457 m³.

Culvert $\left[\left(\frac{0.0+105}{2} \times 161\right)(.05 \times 14) + (2.8 \times 52)\right] \times 1.54 =$ 17.53 m³.

22.10 m³ ✓

Trench Excavation of Rock 100%

Culvert 2.8 x 0.52 (Ave) x 1.54 = 2.24 m³.

DI 2.2m x 2.2m x 1.48 = 7.16 m³.

9.40 m³ ✓

DRP 1/20.

Geotextile Under Stone Fill
3.3m (W) x 4.1m (L) = 353 m².

To Bk 2, Pg 4
WRF 06-05-06

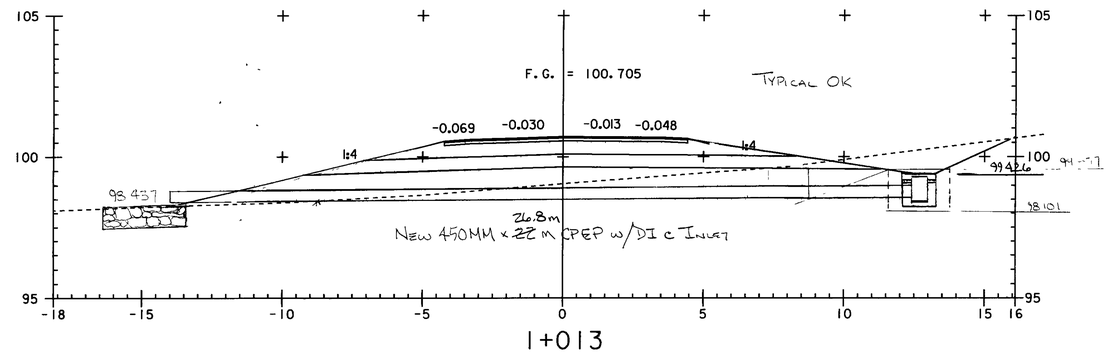

1+013
ASKEW = 81°29"41" RT
FIELD PROFILE

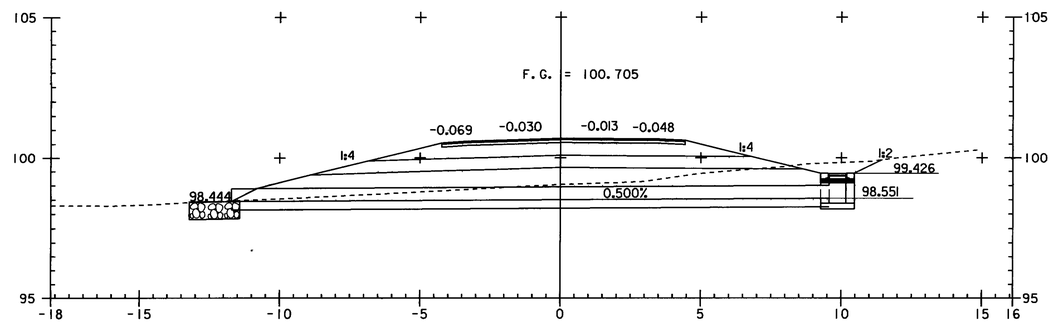

1+013
ASKEW = 81°29"41" RT
DESIGN SECTION

Drainage Sheet # 1

458-drainage

Metric

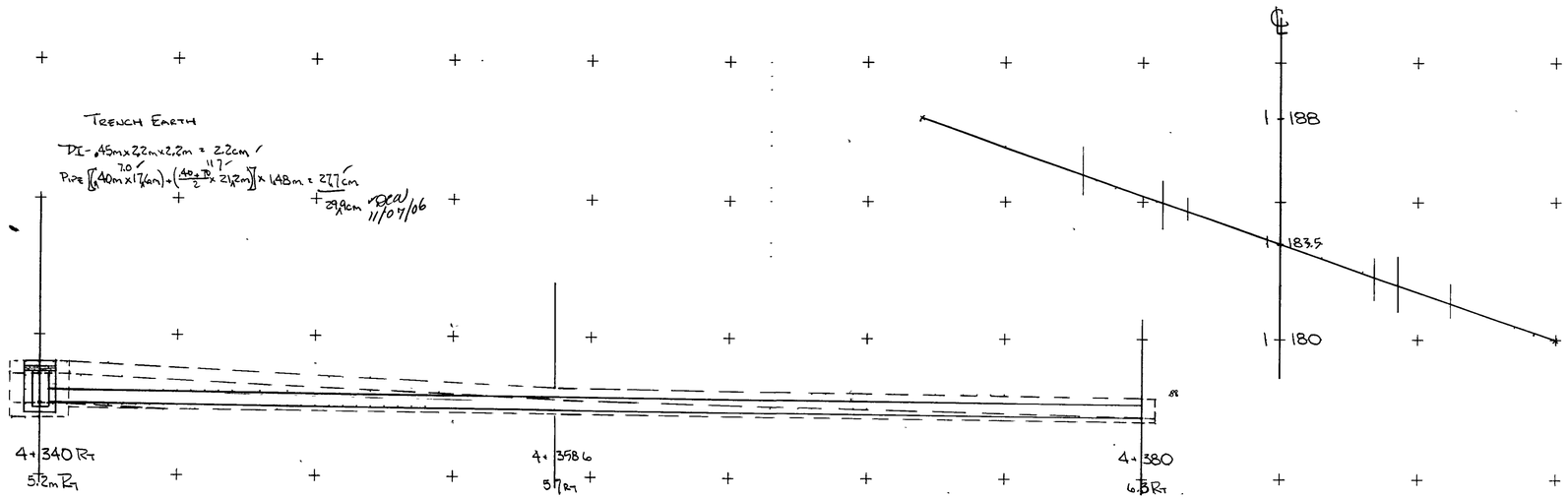

Trench Earth

DI - .45m x 2.2m x 2.2m = 2.2cm

Pipe [(.40m x 17.6m) + (.40+.70/2 x 21.2m)] x 1.48m = 27.7cm

29.9cm DCW 11/07/06

Trench Rock

DI 1.05m x 2.2m x 2.2m = 5.1cm

Pipe (1.05m x 3.4m) + (1.05+.6/2 x 14.2m) + (.5+.15/2 x 21.2) x 1.48 = 31.8cm

36.9cm DCW 11/07/06

Trench Rock over 1.5m

DI. .5m x 2.2m x 2.2m = 2.42cm x 1.5 = 3.6cm

Pipe (.10/2 x 3.4) 1.48 = .25cm x 1.5 = 0.4cm

4.0cm DCW 11/07/06

40.3m x 450mm CSP w/ D.I.C Inlet

Granular Backfill for Structures

DI - 0.5m (w) x 1.0m (H) x 6.8m (Perimeter) = 3.4cm

Under DI - 0.15m x 2.2m x 2.2m = .7cm

4.1cm

Pipe - 0.8m (H) x 1.48m (w) x 39.4m (L) = 46.6cm

50.7cm WRF 08-15-06

DCW 11/07/06

To Bk 2 Pg 124

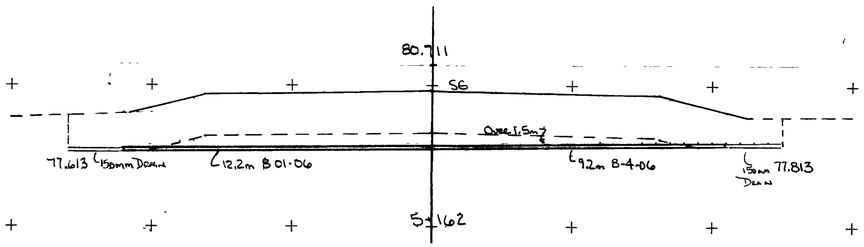

New Sleeve for Field Drain (150mm Dia) x 21.4m - Sleeve Furnished by Others

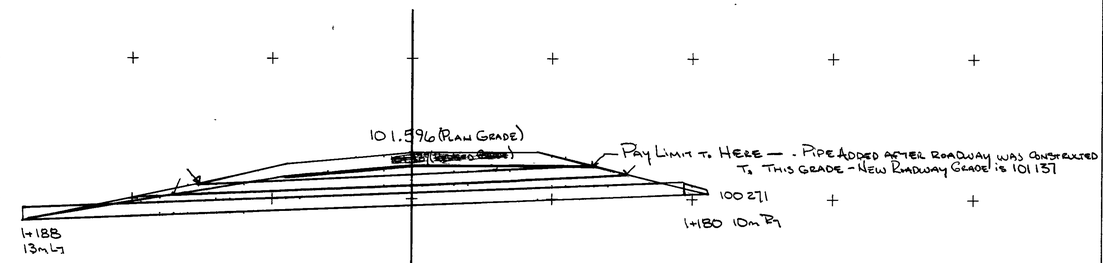

450mm x 23.8m CPEP w/ CPEPES at Inlet

1+183.5 Skew -

Trench Earth -

[(1.0/2 x 6.2) + (1.0+1.15/2 x 14) + (1.15/2 x 4.2)] x 1.54 = 31.7cm WRF 6-26-06

DRP 6/28/06

To Bk 2, Pg 14

Trench Earth Under 1.5m

[(1.3+1.35/2 x 2.1) + (1.35+1.5/2 x 0.7) + (1.5 x 19.6) + (1.5+1.05/2 x 1.7) + (1.05 x 1.2)] x 1.30 = 47.7 m³

Trench Earth over 1.5m

[(0.0+0.5/2 x 1.9) + (0.5+0.6/2 x 8.1) + (0.6+0.3/2 x 8.0) + (0.3+0.0/2 x 1.4)] x 1.30 = 11.4m³ x 1.5 = 17.2m³

64.9m³ WRF 08-07-06

DCW 11/07/06

Granular Backfill for Structures (.30m over Sleeve)

.45m (Depth) x 1.30m (Wide) x 25.5m = 14.92m³ WRF 08-07-06

To Bk 2, Pg 157

PROJECT: Highgate - Franklin	PROJECT NO.: STP-RS 0301(1)SA
DESIGN FILE NAME: IPARM FILE NAME:	PLOT DATE: 01-MAY-1996
450mm Culvert Sta 1+180 Rt to 1+188 Lt	
	SHEET: 1A OF

STONE FILL TYPE II C OUTLET

84m (L) x 3m (w) x 0.6m (DEEP) = 151 cm ✓ WRF04 21-06

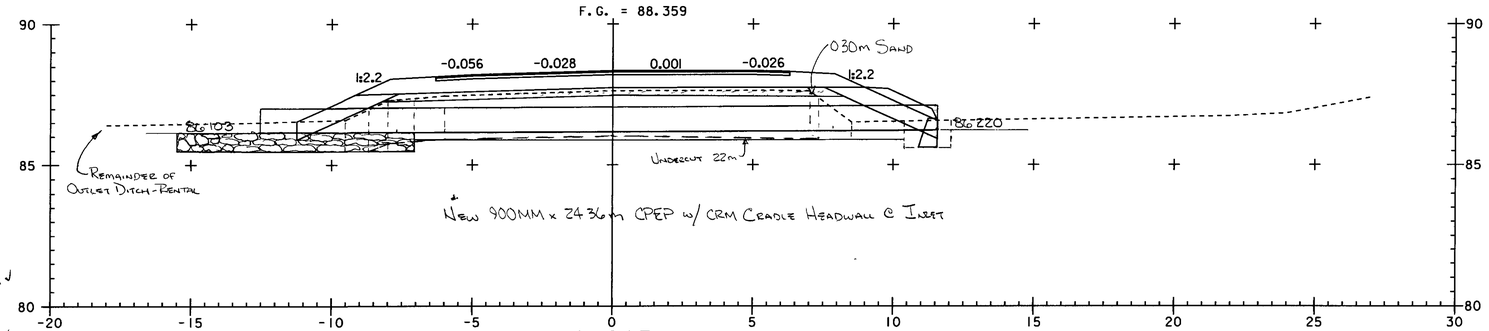

1+615
ASKEW = 43° 00' 50" LT
FIELD PROFILE

TRENCH EARTH 100%

STONE FILL C OUTLET

$\left[\left(\frac{10+1}{2}\times 60\right)+\left(\frac{11+15}{2}\times 08\right)+(15\times 16)\right]\times 3m(w)$ = 29.2 cm ✓

CULVERT

$\left[(15\times 145)+\left(\frac{15+06}{2}\times 1.1\right)+(0.6\times 18)\right]\times 197m$ = 474 cm ✓

HEADWALL

10m (D) x 16m (w) x 31m (L) = 50 cm ✓

TRENCH EARTH 150%

$\left(\frac{0.0+03}{2}\times 07\right)+\left(\frac{03+04}{2}\times 08\right)\times 3m(w)\times 15(\text{FACTOR})$ = 19 cm.

CULVERT

$\left[\frac{0.0+01}{2}\times 6\right)+\left(\frac{0.0+00}{2}\times 1\right)\times 197m\times 1.5\ (\text{FACT.R})$ = 1.9 cm.

854 cm ✓

WLR 05 01-06 LRR

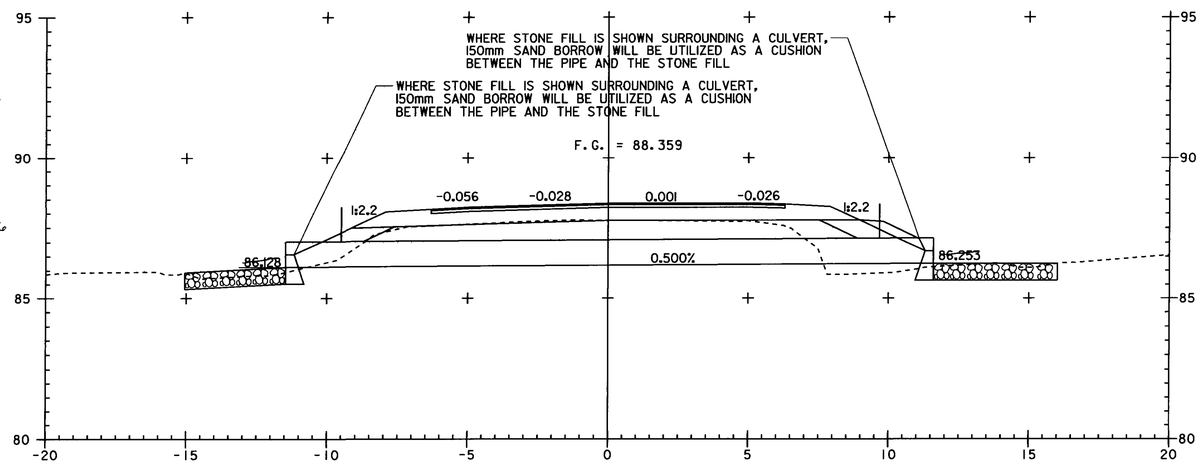

~~1+615~~
~~ASKEW = 43° 00' 50" LT~~
~~DESIGN SECTION~~

GEOTEXTILE UNDER STONE FILL TYPE II

MEASURED IN PLACE BY JA

43 x 3 = 129 sm.

86 x 5.5 = 473 sm.

602 sm.

GRANULAR BACKFILL FOR STRUCTURES

UNDERCUT PIPE

(0.225m) D x (175m) L x 197m (w) = 78 cm.

To Be 2, Pg 48

PIPE

$\left(\frac{0+1.38}{2}\times 25\right)-\left(12\times 1.65\right)+\left(\frac{1.2+0.56}{2}\times 26\right)\times 197$ = 44.8 cm

526 cm ✓

DRAINAGE SHEET # 2

459 - Drainage

Trench Excavation 0-1.5m
Stone Fill Type II
3m (L) x 3m (w) x 0.6m D = 54cm
Culvert
188 [illegible]
[illegible] x 1.5m = [illegible]
DI
2.2m x 2.2m x 1.5m = [illegible]
[illegible]

Trench Excavation Over 1.5m
Pipe
[illegible] x 1.50 factor = [illegible]
DI
[illegible] x 1.50 factor = [illegible]
[illegible]

Stone Fill Type II
198 82
$\left(\frac{0.75+1.05}{2} \times 2.2\right) + \left(\frac{1.05+1.00}{2} \times 0.8\right) \times 3m(w) = 84$ cm
WCF
04-26-06

Granular Backfill for Structures
DI - 2.2m x 2.2m x 0.15 = [illegible]
Culvert
0.9m (D) x 1.54m [illegible] = [illegible]
[illegible] x 1.54m [illegible] = [illegible]
[illegible]

Geotextile under Stone Fill Type II
Measured in Place by IA
5m x 5m = 25m

To Bk 2, Pg [illegible]

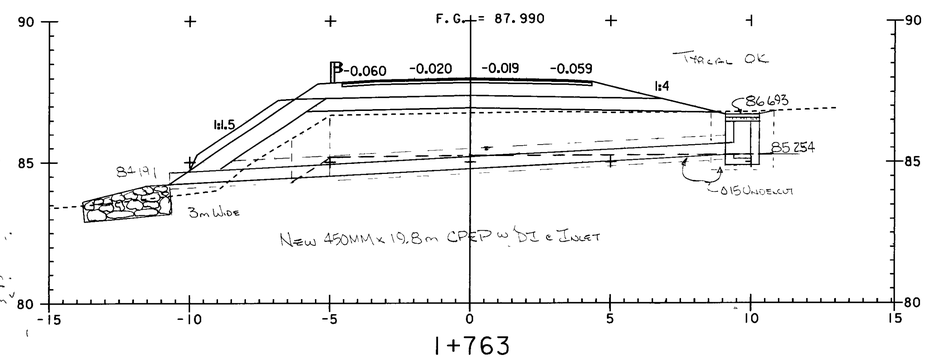

1+763
ASKEW = 83° 12′ 33" LT
FIELD PROFILE

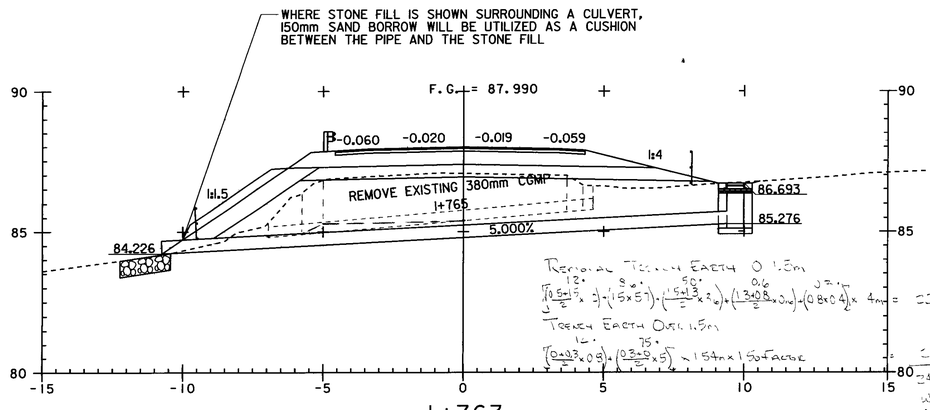

Removal Trench Earth 0-1.5m
12 8 50 0.6 0.2
[illegible] x 1.5 x 5.7) + [illegible] x 2.6) + [illegible] x 0.6) + [illegible] x 4m = 22.0 m³
Trench Earth Over 1.5m
12 75
[illegible] x 0.9) + [illegible] x 5) x 1.54m x 1.50 factor = [illegible]
240m² ✓ DI
WCF
04-03-06
To Bk 2, Pg [illegible]

1+763
ASKEW = 83° 12′ 33" LT
DESIGN SECTION

Drainage Sheet # 3

460 - Drainage

TRENCH EXCAVATION @ 100%

UNDERCUT -
17.3m(L) x 0.15m(D) x 1.54m(W) = 4.00 cm.

CULVERT -
$\left(\frac{0+1.0}{2}\right)(1.0) + (1.0 \times 47) + \left(\frac{1.0+0.7}{2} \times 47\right) + \left(\frac{1.5+1}{2} \times 19\right)$
$(0.8m^2 + 47m^2 + 42.7m^2 + 0.6m^2) \times 1.54m = 159 cm^3$

REMOVE EXISTING CULVERT
$10m(L) \times (1.3m)W \times \left(\frac{0+.3m}{2}\right)D$ = 1.95 cm.
219 cm³

WF
04-25-06

GRANULAR BACKFILL FOR STRUCTURES
(TO 0.3m OVER CULVERT)
$19m(L) \times 1.54m(W) \times 0.9m(D)$ = 26.3cm³ WF
04-25-06

STONE FILL TYPE II @ OUTLET
.75 1.05 45. 81.
$\left(\frac{0+1.0}{2} \times 1.5\right) + \left(\frac{1.0+1.1}{2} \times 1\right) + (0.9 \times 0.5) + \left(\frac{0.9+0.0}{2} \times 1.8\right) = 3.06 \times 6m(W) = 18.4 m^3$
WF
04-26-06

GEOTEXTILE FOR STONE FILL
6m L x 9 m WIDE 54 m²

TO BK 2, PG 62

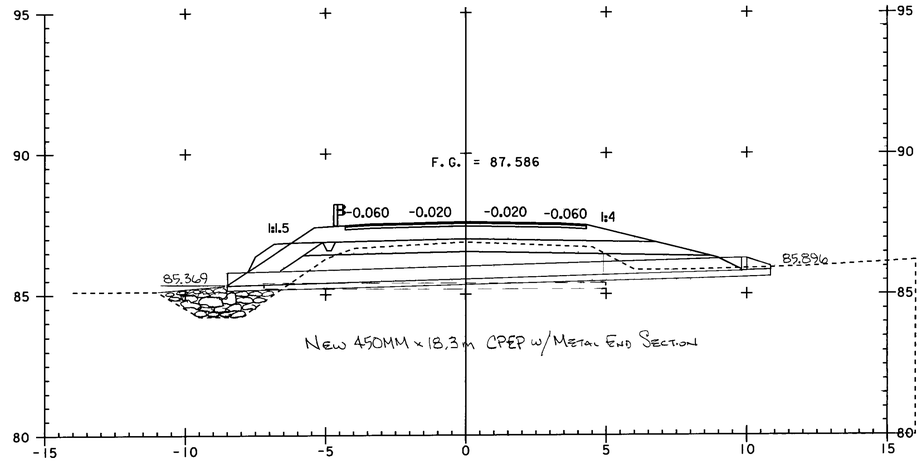

1+853
ASKEW = 82°49'21" LT
FIELD PROFILE

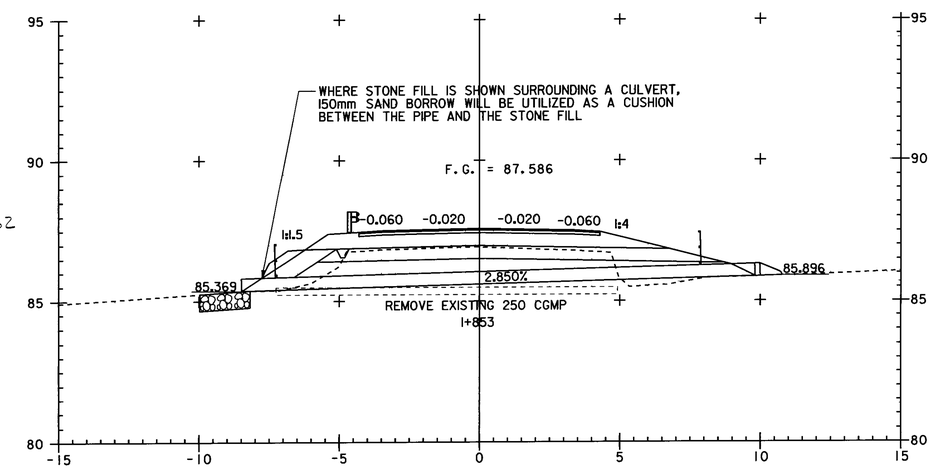

1+853
ASKEW = 82°49'21" LT
DESIGN SECTION

DRAINAGE SHEET # 4

481- Drainage

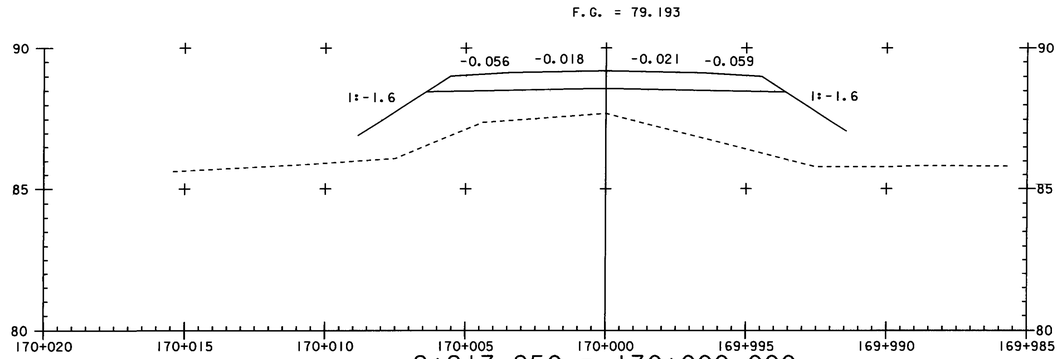

2+217.250 = 170+000.000
ASKEW = 73°00'00" LT
FIELD PROFILE

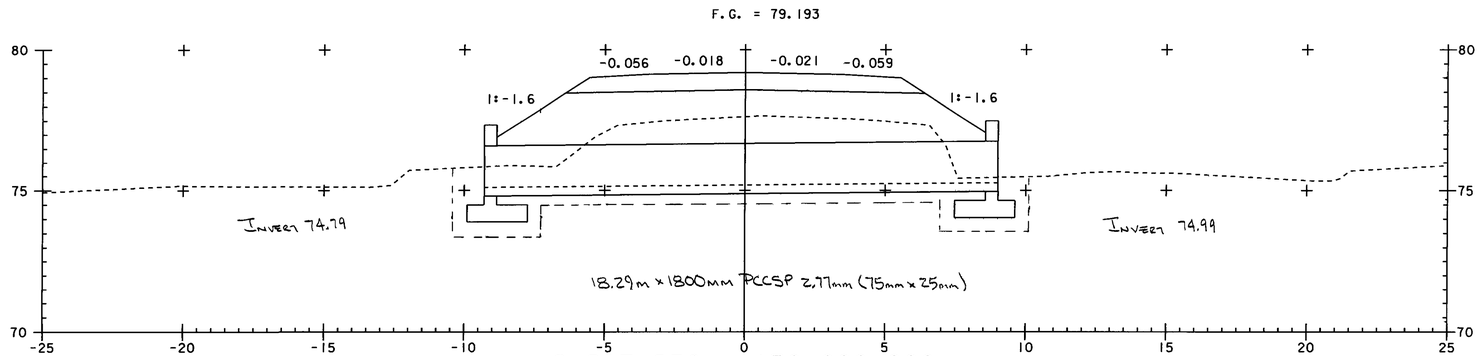

2+217.250 = 170+000.000
ASKEW = 73°00'00" LT
DESIGN PROFILE

DRAINAGE SHEET #5

462-Drainage

Unclassified Channel Excavation

Station	Dist	Area SM	Vol CM
169+987.0		5.6	
	1.4		7.8
169+988.4		5.6	
	1.4		5.7
169+989.8		2.6	
		2.0	
170+010.5	1.4		4.1
		3.8	
170+011.9	3.6		15.5
		4.8	
170+015.5	3.5		16.8
		4.8	
170+019.0			49.9 cm

JWS 1-25-7

Structure Excavation

Station	Dist	Area SM	Vol CM
169+988.4		0	
	1.4		12.0
169+989.8		17.2	
	0.9		20.5
169+990.7		28.3	
	2.4		55.6
169+993.1 (Back)		18.0	
169+993.1 (Ahd)		11.1	
	6.9		80.7
170+000.0		12.3	
	4.4		51.5
170+004.4		11.1	
	2.8		34.5
170+007.2 (Back)		6.4	
170+007.2 (Ahd)		12.7	
	2.4		40.7
170+009.6		21.2	
	0.9		17.5
170+010.5		17.6	
	1.4		12.3
170+011.9		0	
			315.3 cm

WRF JWS 1-25-7

Geotextile under Stone Fill, Type II

Station	Dist	Length	SM
169+987.0		7.7	
	1.4		10.8
+988.4		7.7	
	1.4		10.2
+989.8		6.9	
	1.2		6.8
+991.0		4.4	
		4.4	
170+009.3	12		6.8
		7.0	
+010.5	5		33.5
		6.4	
+015.5	35		22.4
		6.4	
+019			90.5

Stone Fill Type II

	Dist	(cm)	
169+987.0		41	
	1.4		5.7
169+988.4		4.1	
	1.4		5.5
169+989.8		3.7	
	1.2		3.3
169+991.0		1.8	
		1.8	
170+009.3	1.2		3.4
		3.8	
170+010.5	5		17.0
		3.0	
170+015.5	3.5		10.5
		3.0	
170+019.0			45.4 cm

JWS 1-25-7

Granular Backfill for Structures

Headwall #1 Quantity from Bridge Sht # 235 - 35.6 cm

	Dist	Area SM	Vol
169+993.1		11.1	
	6.9		76.6
170+000		11.1	
	4.4		48.8
+0044		11.1	
	3.1		34.6
+007.2		13.6	
Headwall #2			35.6
			231.2 cm

WRF 01-09-07
JWS 1-25-7

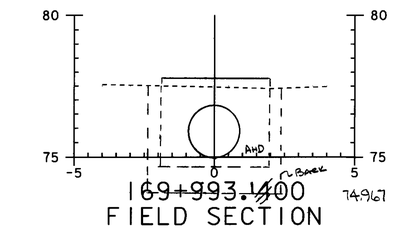

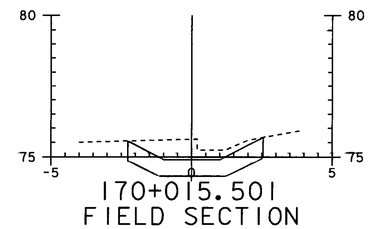

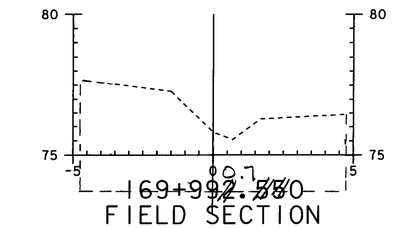

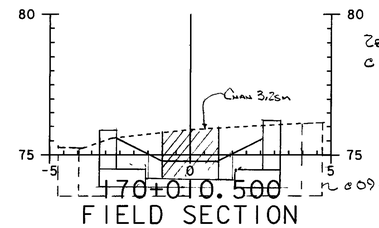

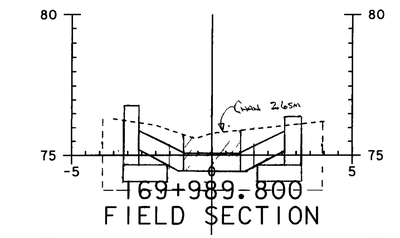

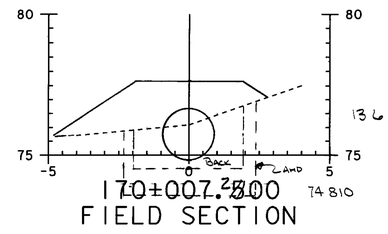

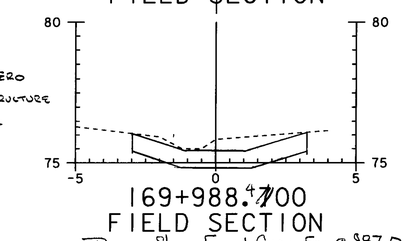

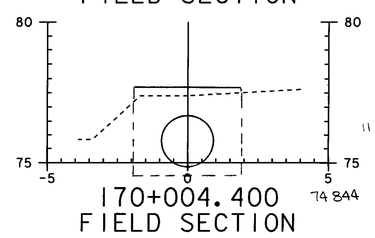

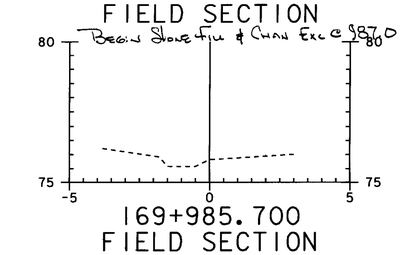

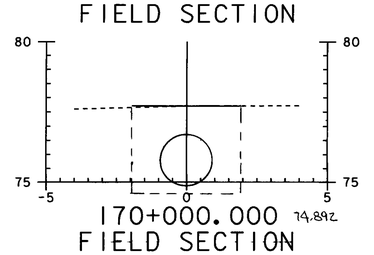

Drainage Sheet # 6

463- Drainage

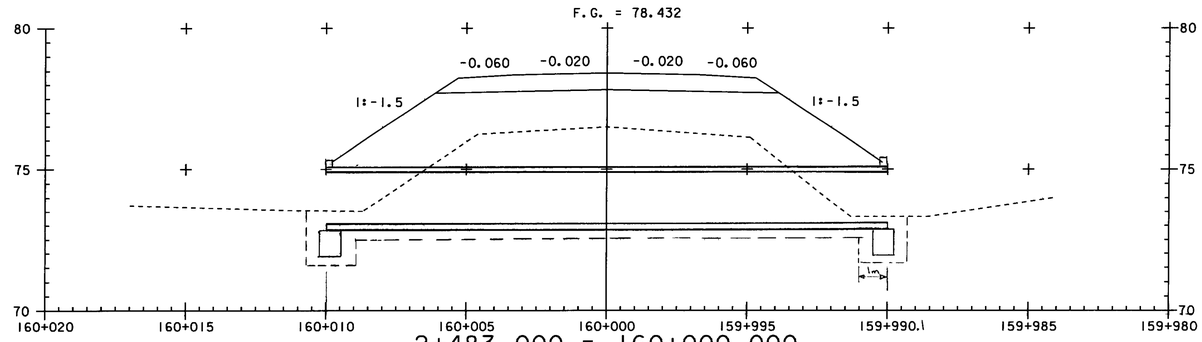

2+483.000 = 160+000.000
ASKEW = 90°00'00" LT
FIELD PROFILE

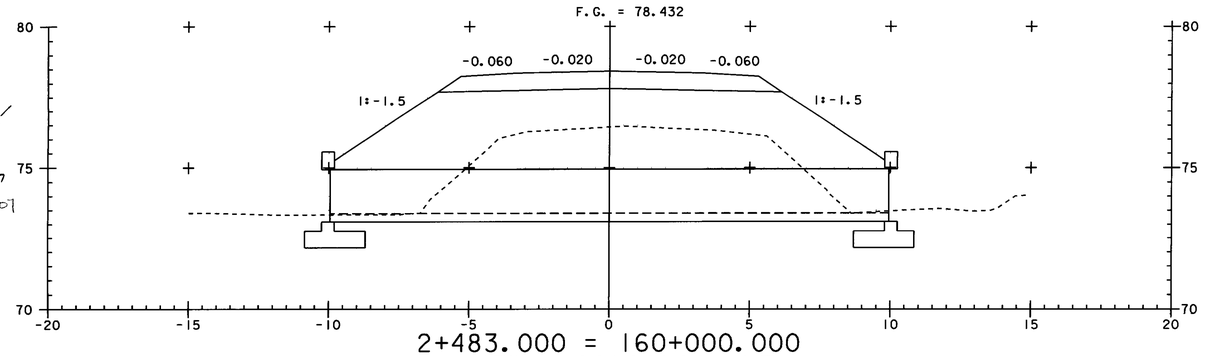

2+483.000 = 160+000.000
ASKEW = 90°00'00" LT
DESIGN SECTION

Granular Backfill for Structures

Under Headwall

$\left[\left(\frac{2.85+3.60}{2}\times 1.8\right)\times 2+\left(\frac{0.9+2.40}{2}\times 1.8\right)\right]\times 0.3$ = 4.4 WRF 01-25-07 ~~2.6~~

Adjacent Footing

$\left[(1.8\times 0.5)\times 2+\left(\frac{2.35+2.60}{2}\times 0.5\right)\times 2+\left(\frac{2.90+3.10}{2}\times 0.5\right)\times 2+\left(\frac{0.9+1.3}{2}\times 0.5\right)+\left(\frac{2.00+2.40}{2}\times 0.5\right)\right]\times .96$ = 8.6 WRF 01-25-01 ~~5.9~~

Behind Headwall

$\left[\left(\frac{3.20+3.60}{2}\times 0.8\right)\times 2+\left(\frac{1.80+2.40}{2}\times 0.8\right)+\text{Anchor Area}\left(1.2\times 1.8\right)\times 2\right]\times 2.3\text{ m}$ = 26.3 ~~30.8~~ cm 35.3 cm WRF 01-10-07 JNS 1-25-7 WRF 01-26-07

Minus Box Culvert Area 50×0.8 = -4.0

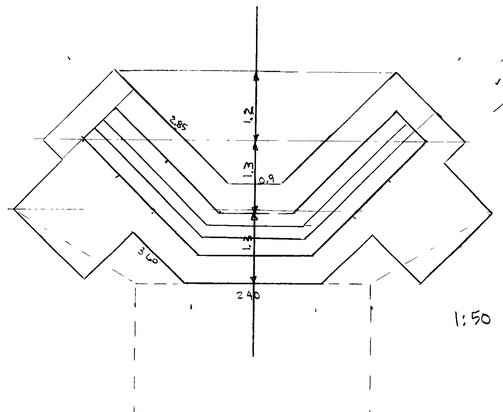

1:50

Drainage Sheet #7

464-Drainage

Unclassified Channel Excavation

Station	Dist	Area sm	Vol cm
159+986	2.55	4.4	8.5
+988.55		2.3	
160+011.6	4.4	2.0	12.8
160+016.0		3.8	21.3 cm

JWS 1-26-7

Stone Fill Type II

159+986.0	2.55	3.4	8.7
+988.55	1.55 ~~1.45~~	3.4	3.5 ~~3.3~~
+990.10		1.1	
160+010.0	1.60	1.1	3.3
+011.6	4.4	3.0	14.5
+016.0		3.6	~~29.8~~ 30.0 cm

WRF 01-24-07

JWS 1-26-7

Geotextile under Stone Fill

159+986.0	2.55	6.2	15.8
+988.55	1.55 ~~1.45~~	6.2	6.5 ~~6.1~~
+990.10		2.2	
160+010.0	1.6	2.2	6.7
+011.6	4.4	6.2	29.0
+016.0		7.0	~~57.0~~ sm 58 sm

JWS 1-26-7

Structure Excavation

Station	Dist	Area sm	Vol cm
159+987.3	1.25	0	10.6
159+988.550	1.25	17.0	21.2
159+989.8	1.3	17.0	16.4
159+991.1 (Back)		8.2	
159+991.1 (Ahd)		4.1	
159+994.9	3.8	15.0	36.3
160+000	5.1	16.6	80.6
160+004.6	4.6	15.5	73.8
160+009.0 (Back)	4.4	5.0	45.1
160+009.0 (Ahd)	1.3	9.1	16.9
160+010.3	1.3	16.9	22.0
160+011.6	1.2	16.9	10.1
160+012.8		0	

333.0 cm JWS 1-26-7

Granular Backfill for Structures

Headwall Area from Drainage Sht #7 #1 - 35.3

159+991.1	3.8	13.8
159+994.9	5.1	9.7
160+000.0	4.6	9.7
160+004.6	4.4	9.7
160+009		13.0

Headwall Area #2

44.6 - M.MS 50 for Box
49.5
~~39.8~~
44.6
49.9

353
~~294.5~~ cm
259.2 cm

JWS 1-26-7
WRF 01-06-07
WRF 01-10-07

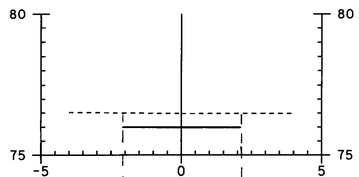

160+000.000
FIELD SECTION

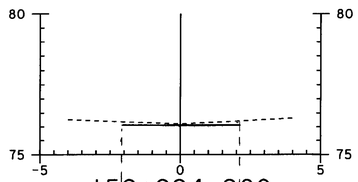

159+994.900
FIELD SECTION

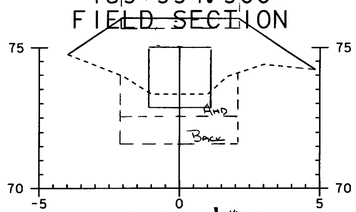

159+991.~~1~~700
FIELD SECTION

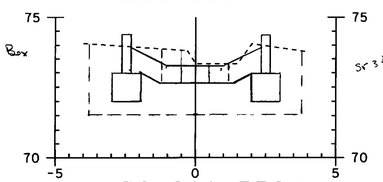

159+988.550 Same Section 159+989.8
FIELD SECTION

Zero Structure 159+987.3

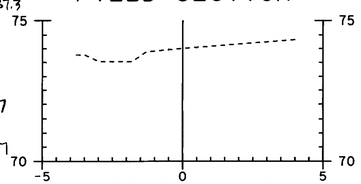

159+984.140
FIELD SECTION

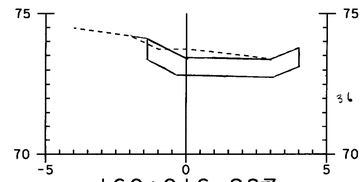

160+016.~~987~~
FIELD SECTION

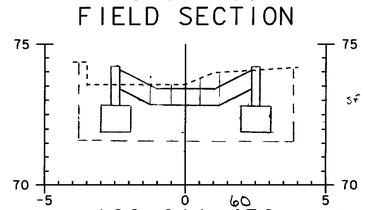

160+011.~~450~~400 Same Section C 160+010.3
FIELD SECTION

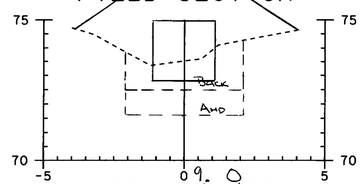

160+008.~~700~~
FIELD SECTION

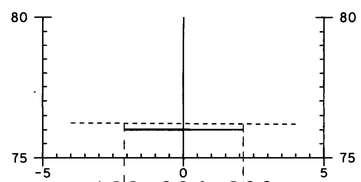

160+004.600
FIELD SECTION

Drainage Sheet #3

465-1 Drainage

Trench Excavation of Earth @ 100%

Stone f.w @ Outlet

$\left(\frac{0.9+1.0}{2} \times 45\right) \times 4.2m(w)$ = 180 cm³

Stone f.w @ Inlet

$\left(\frac{0.5+0.3}{2} \times 4\right) \times 3m(w)$ = 9.8 cm³ ✓

Headwall @ Outlet

$1.05m(D) \times 1.6m(w) \times 2.95m(L)$ = 50 cm³

Inlet Headwall

$0.9m(D) \times 1.6m(w) \times 2.95m(L)$ = 42 cm³

Pipe

$\left[\left(\frac{0.4+0.2}{2} \times 3.4\right)(0.1 \times 3) + \left(\frac{0.9+0.7}{2} \times 0.9\right) + \left(\frac{0.7+0.8}{2} \times 0.9\right)\right.$

$\left. + \left(\frac{0.8+1.5}{2} \times 0.3\right) + (1.5 \times 10.4) + \left(\frac{1.5+1.1}{2} \times 0.4\right) + \left(\frac{1.0+0.1}{2} \times 0.16\right) + \left(\frac{0.1+0.2}{2} \times 1.8\right)\right] \times 1.88m$ = 56.45cm³

Trench Earth @ 150%:

$\left(\frac{0.0+0.7}{2} \times 0.3\right) + \left(\frac{0.7+0.9}{2} \times 3.4\right) + \left(\frac{0.9+0.5}{2} \times 5.8\right) + \left(\frac{0.5+0}{2} \times 0.9\right) \times 1.88m \times 1.5$ = 20.1cm³ ✓

88.55cm³

WRF

05-01-06

Granular Backfill for Structures-

Culvert-

$0.88m(H) \times (1.88m)w \times 1.9m(L)$ = 3.14m³

Earth Borrow

$\left(\frac{8.5+11.5}{2}\right)L \times (1.22)H \times (1.88)w$ 22.9 × 1.15 FACTOR = 26.3cm³ ✓

Stone Fill Type II

Inlet

$4.5m(L) \times 0.3m(D) \times 3m(w)$ = 4.1 cm³

Outlet

$5.0m(L) \times 0.5m(D_{AVE}) \times 4.2(w)$ = 10.5 cm³

14.6cm³ ✓

WRF

05-01-06

Geotextile under Stone Fill

Inlet

$5.1m \times 3.6m$ = 18.4sm.

Outlet

$5.4m \times 5.6m$ = 30.25m.

48.65sm ✓

To Bk 2, Pg 74

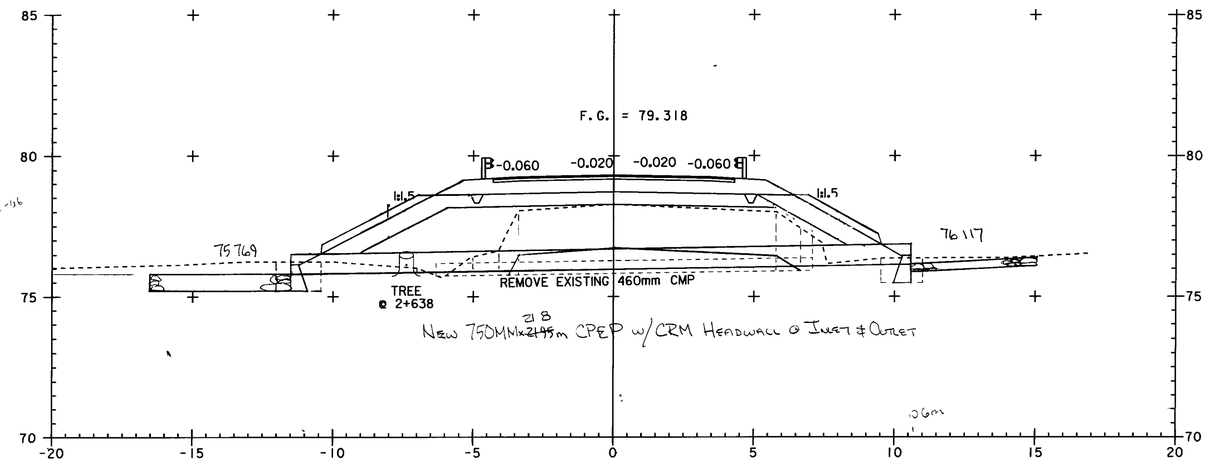

2+636.000
ASKEW = 90° 00' 00" LT
FIELD PROFILE

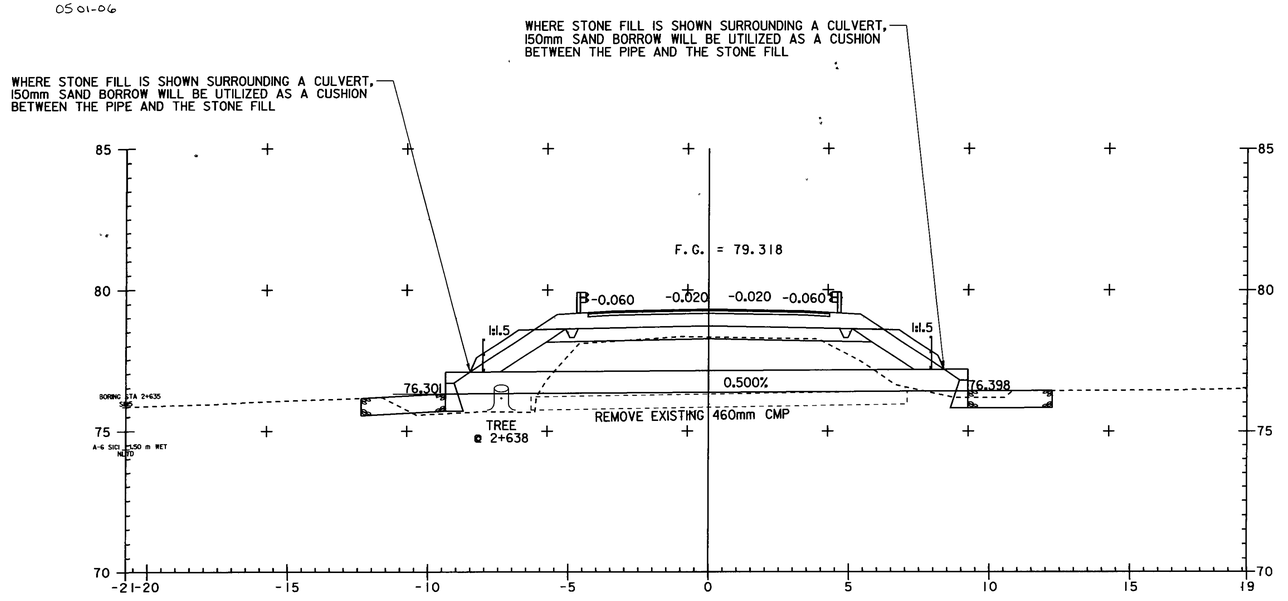

2+636.000
ASKEW = 90° 00' 00" LT
DESIGN SECTION

Drainage Sheet 4 of 9

486-Drainage

TRENCH EARTH - NEW CULVERT

$\left(\frac{0.0+0.6}{2}\times 0.9\right)+\left(\frac{0.6+1.5}{2}\times 1.3\right)+\left(1.5\times 11.8\right)+\left(\frac{1.4+0.0}{2}\times 2\right)+\left(\frac{0.0+0.2}{2}\times 2.5\right)$ - 20.99

.27 1.37 17.70 1.40 .25

20.99 m² × 1.78 m = 37.4 m³

FOR STONE FILL @ OUTLET

3m(L) × 8m(W) × 0.6m(D) = 14.4 cm

WRF 10-2-06

GRAN BACKFILL FOR STRUCTURES

EXIST CULVERT AREA = 8.5 m³

NEW CULVERT

1.78m(W) × 1.00m(H) × 15m(L) AVE = 26.7 m³

35.2 m³

WRF 08-25-06

DEW 11-07-06

STONE FILL @ OUTLET

3m(L) × 8m(W) × 0.6m(D) = 14.4 cm

GEOTEXTILE FOR STONE FILL

42m(L) × 9.2m(W) = 38.6 sm

T. BK 2 PG. 78

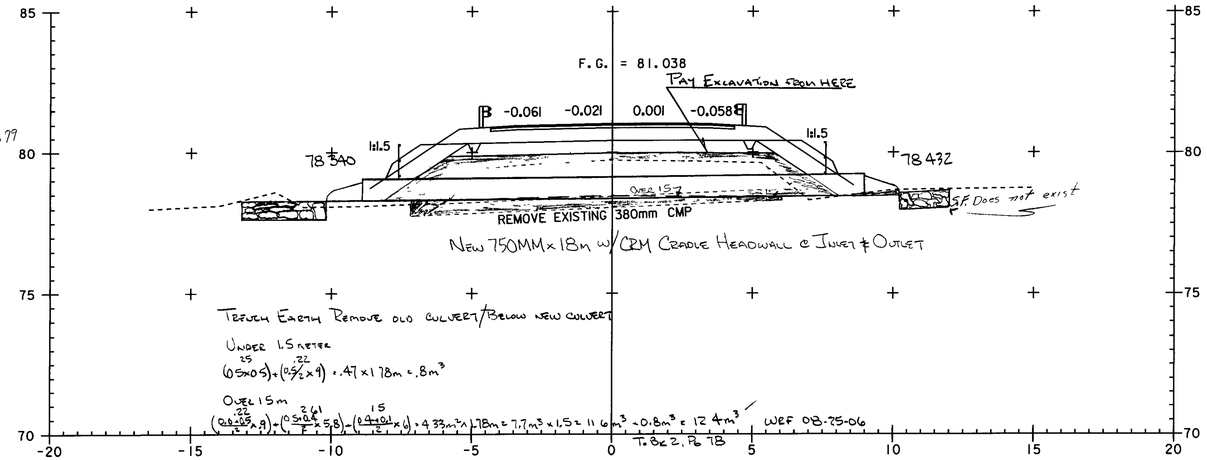

2+847.000
ASKEW = 82°04'47" LT
FIELD PROFILE

TRENCH EARTH

$\left(\frac{0.7+0.8}{2}\times 7.5\right)+\left(\frac{0.8+1.5}{2}\times 1.0\right)+\left(1.5\times 14.6\right)+\left(\frac{1.5+0.8}{2}\times 1.0\right)+\left(\frac{0.8+0.7}{2}\times 4.8\right)$ = 33.3 m²

5.6 1.1 21.9 1.1 3.6

33.3 m² × 1.28 m = 42.6 m³

OVER 1.5m

$\left(\frac{0.0+1.0}{2}\times 1.5\right)+\left(\frac{1.0+0.9}{2}\times 11.7\right)+\left(0.9/2\times 14\right)$ = 12.5 m² × 1.28 m = 16 m³ × 1.5 = 24 m³

66.6 m³

GRANULAR BACKFILL FOR STRUCTURE

1.28m × 20m(L) × 0.5m(H) = 12.8 cm

WRF 8-25-06

DEW 11/07/06

T. BK 2 PG 76

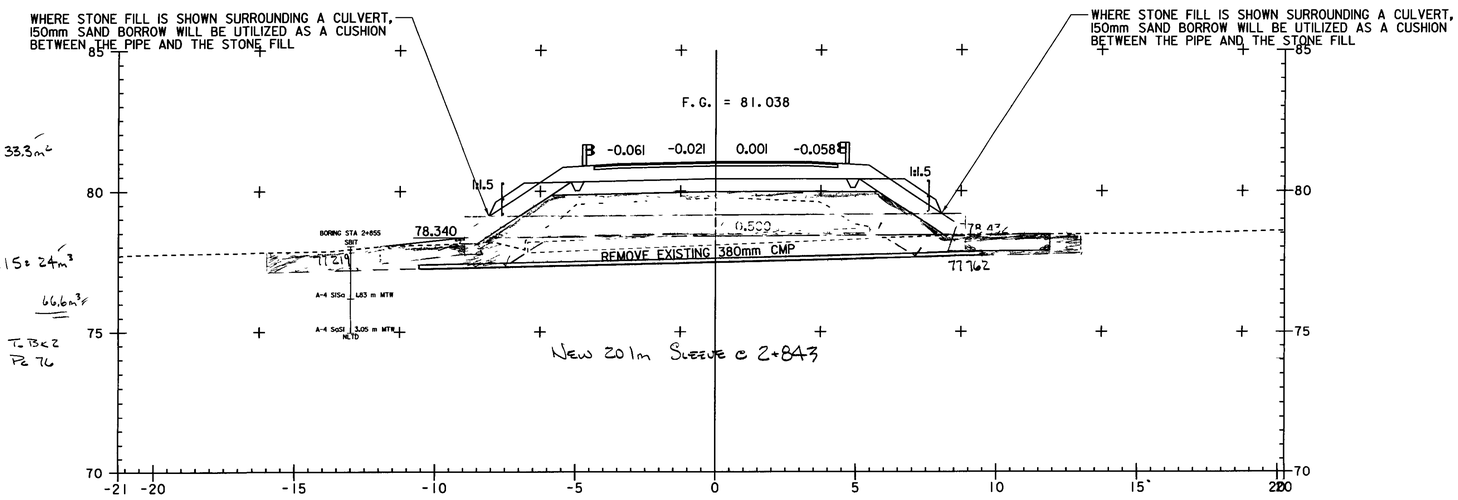

2+847.000
ASKEW = 82°04'47" LT
FIELD PROFILE

DRAINAGE SHEET # 10

467-Drainage

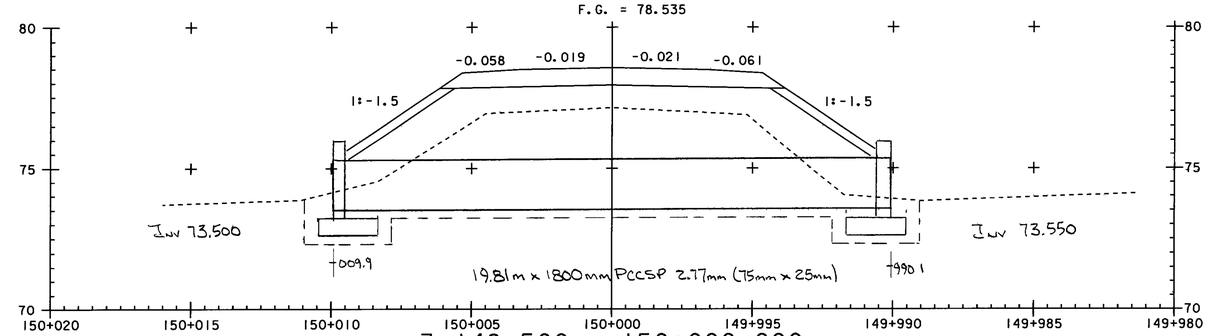

3+148.500 = 150+000.000
ASKEW = 83°30'00" LT
FIELD PROFILE

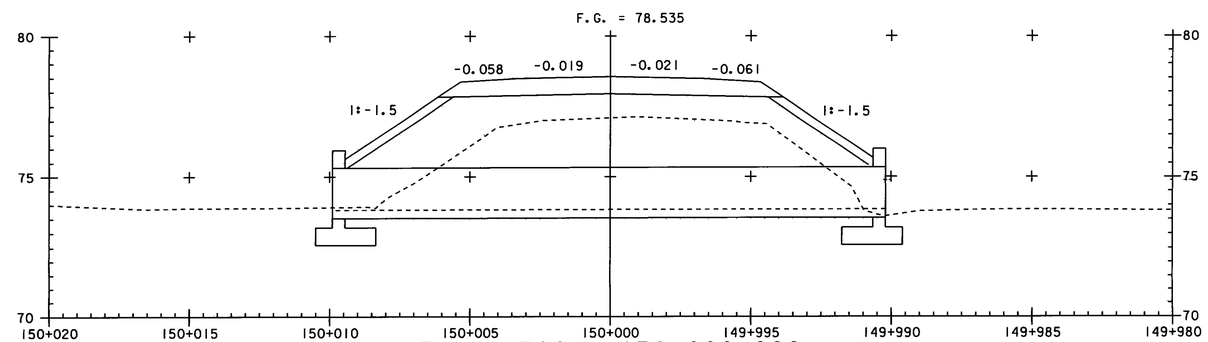

3+148.500 = 150+000.000
ASKEW = 83°30'00" LT
DESIGN SECTION

DRAINAGE SHEET # 11

468- Drainage

Unclassified Channel Excavation

Station	Dist	Area SM	Vol CM
149+982.0		2.4	
	7		14.7
+989.0		1.8	
150+011.0		1.6	
	5		8.5
+016.0		1.8	
			23.2 cm 1-26-7 JWS

Structure Excavation

Station	Dist	Area SM	Vol CM
149+987.6		0	
	1.4		11.8
+989.0		16.9	
	0.9		17.1
+989.9		21.0	
	2.4		37.4
+992.3		10.2	
+992.3		4.0	
	2.9		26.1
+995.2		14.0	
	4.8		69.6
+000.0		15.0	
	4.5		65.5
+004.5		14.1	
	3.2		31.0
+007.7		5.3	
+007.7		11.2	
	2.4		32.2
+010.1		15.6	
	0.9		15.8
+011.0		19.4	
	1.4		13.6
+012.4		0	
			320.1 cm JWS 1-26-7

Stone Fill, Type II & Geotextile under Stone Fill

Station	Dist	Area (SM)	Vol	Length	SM
149+982		2.0		4.9	
	7		18.2		41.0
+989		3.2		6.8	
	1.1		2.8		6.2
+990.1		1.8		4.4	
150+009.9		1.8		4.4	
	1.1		2.8		6.2
+011		3.2		6.8	
	5		12.0		27.2
+016		1.6		4.1	
			35.8 cm JWS 1-26-7		80.6 SM JWS 1-29-7

Granular Backfill for Structures

1.5 Deduct for Area of Pipe

Headwall Area - from Sht # 235

Station	Dist	Area SM	Vol CM
149+992.3		12.8	
	2.9		34.2
+995.2		10.8	
	4.8		51.8
+000.0		10.8	
	4.5		48.6
+004.5		10.8	
	3.2		41.6
+007.7		15.2	
Headwall			35.6
			247.4 cm JWS 1-26-7

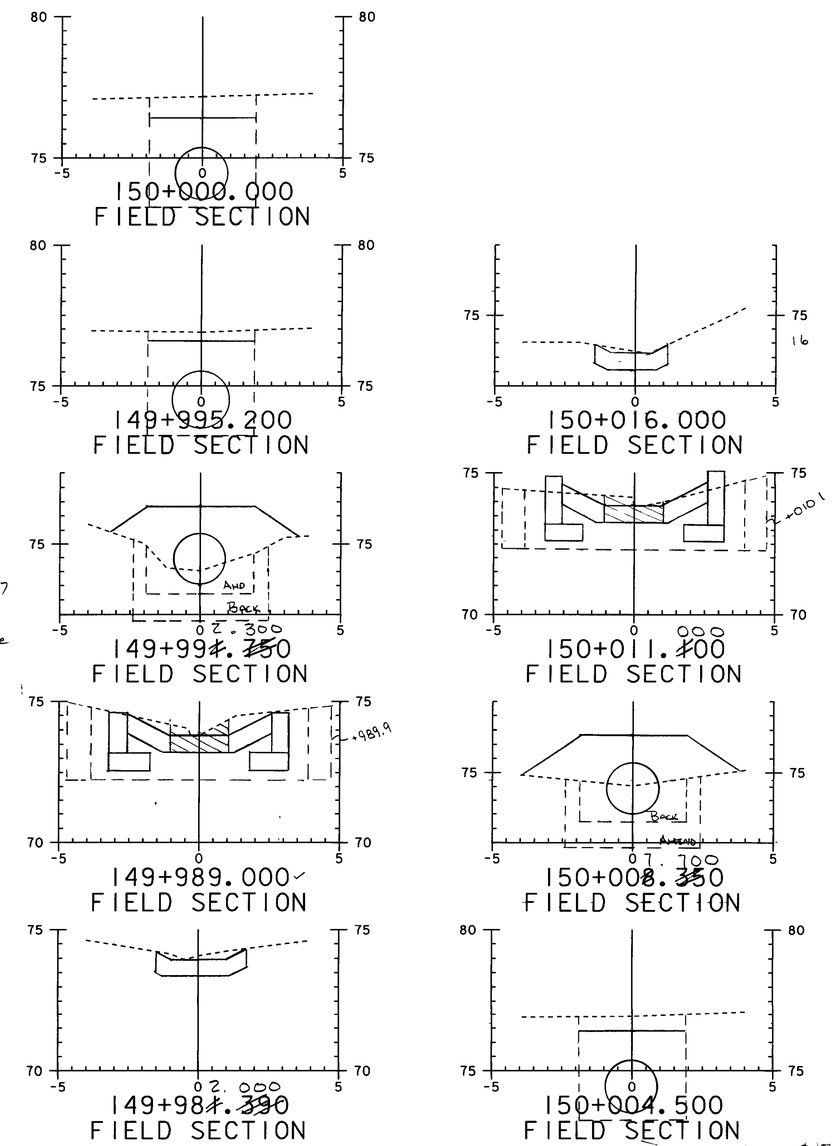

Drainage Sheet # 17

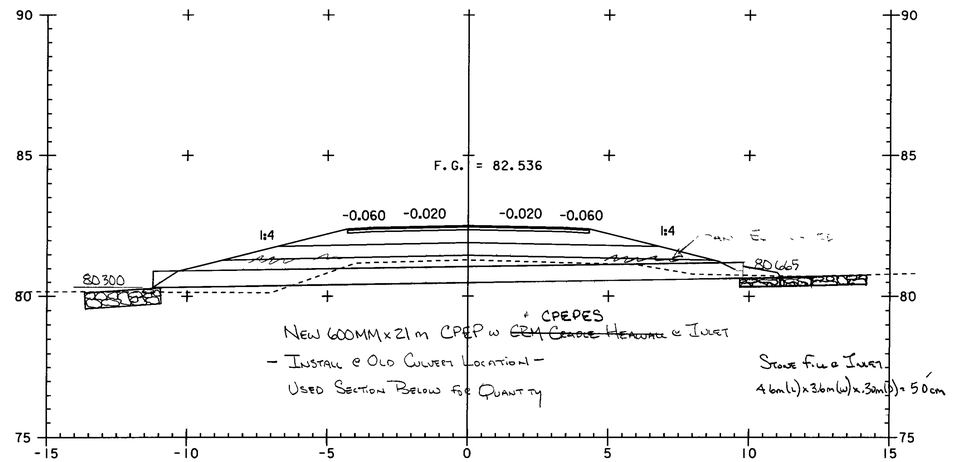

3+340
FIELD PROFILE

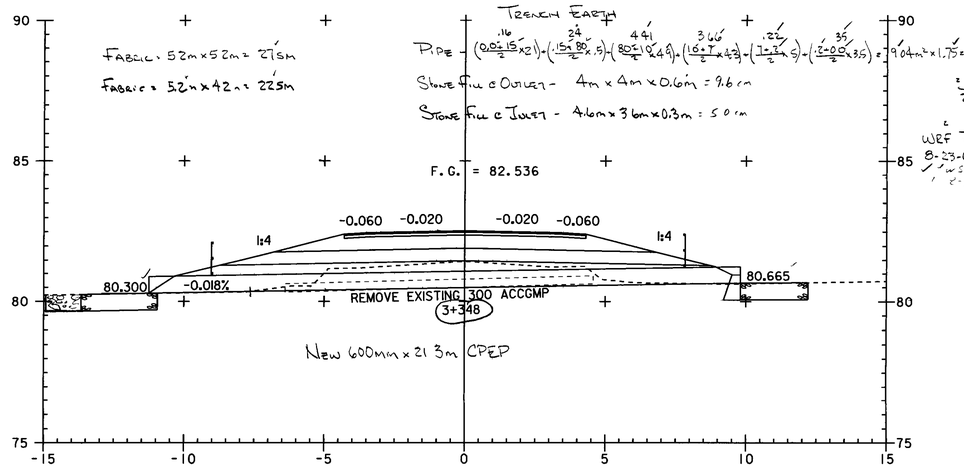

3+340
DESIGN SECTION

DRAINAGE SHEET # 13

470 mm

Trench Earth @ 100%

Stone Fill @ Inlet

6.5m(L) x 4m(W) x 1.4m (Ave Depth) = 36.40 cm

Stone Fill @ Outlet

6.0m(L) x 4m(W) x 0.80m (Ave Depth) = 19.20 cm

Inlet Headwall

1.6m x 3.1m(L) x 1.4m (Depth) = 6.04 cm

Outlet Headwall

[illegible] x 3.1m(L) x 0.7m (Depth) = [illegible] cm

Pipe

$\left[\left(\frac{0.2+0.4}{2}\times 2.4\right)+\left(\frac{0.4+1.5}{2}\times 1.9\right)+\left(1.5\times 13.2\right)+\left(\frac{1.5+0.8}{2}\times 1.8\right)+\left(0.8\times 0.3\right)\times 1.97\right]$ = 48.[illegible] cm

Trench Earth @ 150%

$\left[\left(\frac{0.0+0.2}{2}\times 5\right)+\left(\frac{0.2+0.5}{2}\times 6.2\right)+\left(\frac{0.5+0.0}{2}\times 1.9\right)\times 1.97\times 1.5\text{ Factor}\right]$ = 9.31 cm

123.82 cm

Stone Fill Type II

Inlet

[illegible] x 1.00m (Ave Depth) = 28.0 [illegible]

Outlet

6.5m(L) x 4m(W) x 0.80m (Ave Depth) = 20.80 cm

48.80 cm

Gravel [illegible]

1.95m(L) x 1.97m(W) x 0.97m(H) = [illegible]

Earth Borrow

$\left(\frac{11+14}{2}\right)L \times 1.5(H) \times 1.97(W) \times 1.15\text{ Factor}$ = [illegible]

Geotextile under Stone Fill

2 [illegible] 6m x 6m = 72

1 [illegible] 6m x 3m = 18

90 sm

To Bk 2, Pg 98

WRF
05-03-06

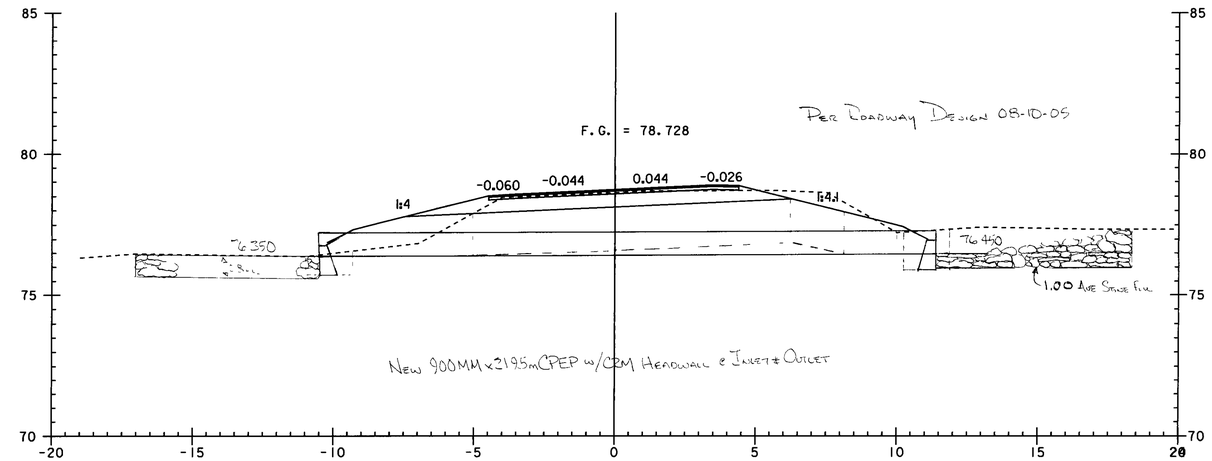

3+486
ASKEW = 75°37'27" LT
FIELD PROFILE

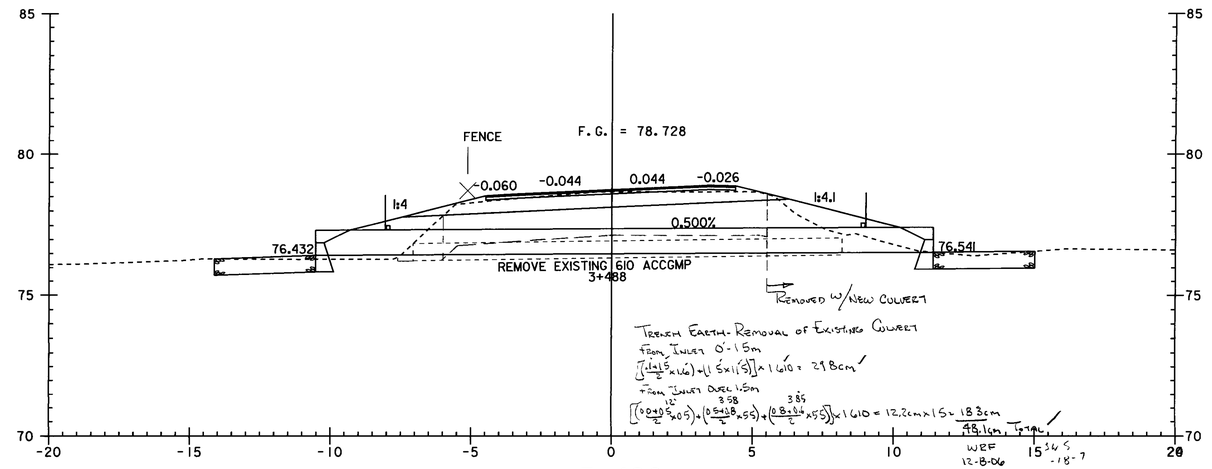

WRF
12-8-06
T. Bk 2, Pg 102

3+486
ASKEW = 75°37'27" LT
DESIGN SECTION

Drainage Sheet # 4

471 - Drainage

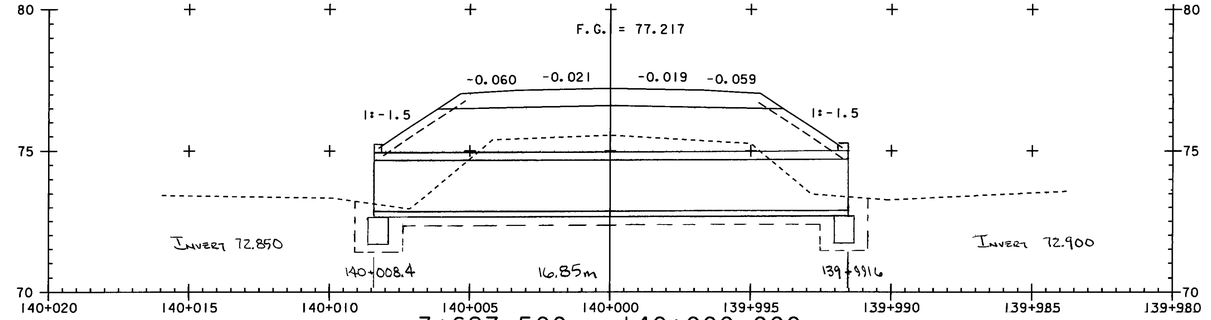

3+627.500 = 140+000.000
ASKEW = 96°00'00" LT
FIELD PROFILE

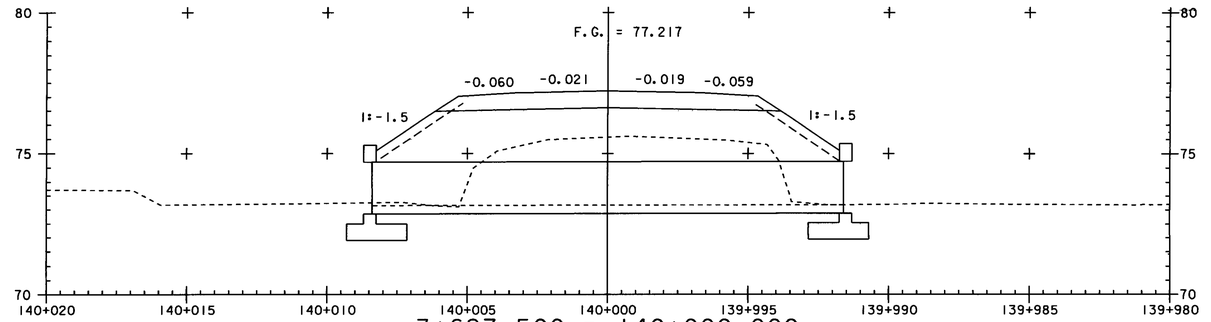

3+627.500 = 140+000.000
ASKEW = 96°00'00" LT
DESIGN SECTION

Drainage Sheet # 15

472 Drainage

Unclassified Channel Excavation

Station	Dist	Area SM	Vol CM
139+986	4	3.4	12.0
+990		2.6	
140+010	4	2.4	10.0
+014		2.6	
			22.0 cm

Structure Excavation

Station	Dist	Area SM	Vol CM
139+988.8	1.2	0	10.4
+990.0	1.3	17.4	22.6
+991.3	1.3	17.4	18.1
+992.6		10.5	
+992.6	2.4	6.0	21.6
+995.0	5.0	12.0	63.5
140+000.0	4.2	13.4	55.0
+004.2	3.2	12.8	27.8
+007.4		4.6	
+007.4	1.3	8.5	16.7
+008.7	1.3	17.2	22.4
+010.0	1.2	17.2	10.3
+011.2		0	
			268.4 cm

Stone Fill Type II & Geotextile under Stone Fill

Station	Dist	Area SM	Vol CM	Length	Area SM
139+986	4	2.4	10.6	5.5	20.6
+990	1.4	2.9	2.8	4.8	4.6
+991.4		1.1		1.8	
140+008.6	1.4	1.1	2.8	1.8	4.6
+010.0	4	2.9	10.0	4.8	19.6
+014.0		2.1		5.0	
			26.2 cm		49.4 SM

Say 49 SM

JWS 1-29-7

Granular Backfill for Structures

Headwall (From Drainage Sht #7)			35.3 cm
139+992.6	2.4	14.4	29.5
+995.0	5.0	10.2	50.5
140+000.0	4.2	10.0	43.5
+004.2	3.2	10.7	38.2
+007.4		13.2	
Headwall			35.3
			232.3 cm

WRF 01-16-07
JWS 1-26-7

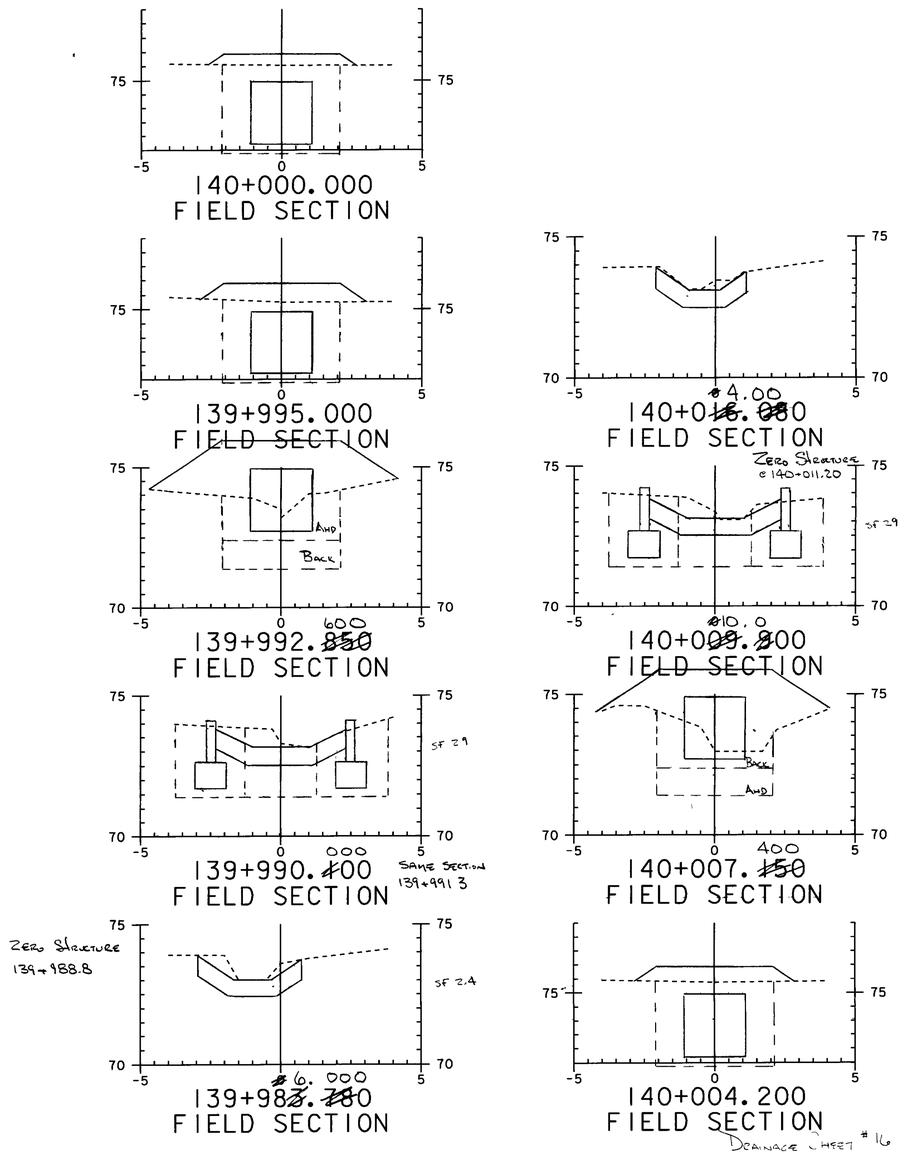

Drainage Sheet #16

473-Drain

Trench Earth

From Outlet 0-15m

$(.13m\ (ave) \times 5.3) + (\frac{.1+4}{2} \times 2.4) + (\frac{.4+1.5}{2} \times 2.3) + (1.5 \times 10.8) + (\frac{1.5+1.0}{2} \times 1.6) + (\frac{1.0+.4}{2} \times 4.9) + (\frac{0.4+0.0}{2} \times 1.6) = 25.42m^2 \times 1.72 = 43.7m^3$

From Outlet Over 1.5m

$(\frac{0.0+0.2}{2} \times 0.5) + (\frac{0.2+0.3}{2} \times 3.9) + (0.3 \times 5.7) + (\frac{0.3+0.0}{2} \times 0.7) = 2.85 \times 1.72m(w) = 4.9 \times 1.5 =$

To remove existing culvert - add 0.6m width

From Outlet 0-15m

$(\frac{0.3+0.4}{2} \times 7) + 2.18m^2 + 16.2m^2 = 18.6m^2 \times 6m(wide) =$ $11.2m^3$

Over 15m

$2.85m^2 \times 0.6m = 1.7m^3 \times 1.5 =$ $2.6m^3$

$13.8m^3$

Total Trench Earth

$64.9m^3 + 6.3m^3 = 71.2m^3$

WRF 12-8-06
JWS 1-18-7
To Bk 2, Pg 136

Granular Backfill for Structures (To Top of Culvert)

Outside Culvert Removal Area

$(5.5m + 6.4m) \times 0.7m(0) \times 1.72m(w) =$ $14.3m^3$

Culvert Removal Area

$14m \times 0.7m \times 2.32m =$ $22.7m^3$

$37.0m^3$

Earth Borrow - 8.5m @ 1m over culvert and 16.5m wide @ top of culvert

Culvert Removal Area

$(\frac{2+1.0}{2} \times 3.2) + (1.0 \times 8.5) + (\frac{1.0+0.5}{2} \times 2.3) = 12.14m^2 \times 2.32m =$ $28.16m^3$

Outside Culvert Removal

$(\frac{0.0+0.2}{2} \times 0.9) + (\frac{0.5+0.0}{2} \times 1.6) = .49 \times 1.72m =$ $.84m^3$

$29.00m^3 \times 1.15 = 33.4cm$

WRF 12-8-06
JWS 1-18-7
To Bk 2, Pg 136

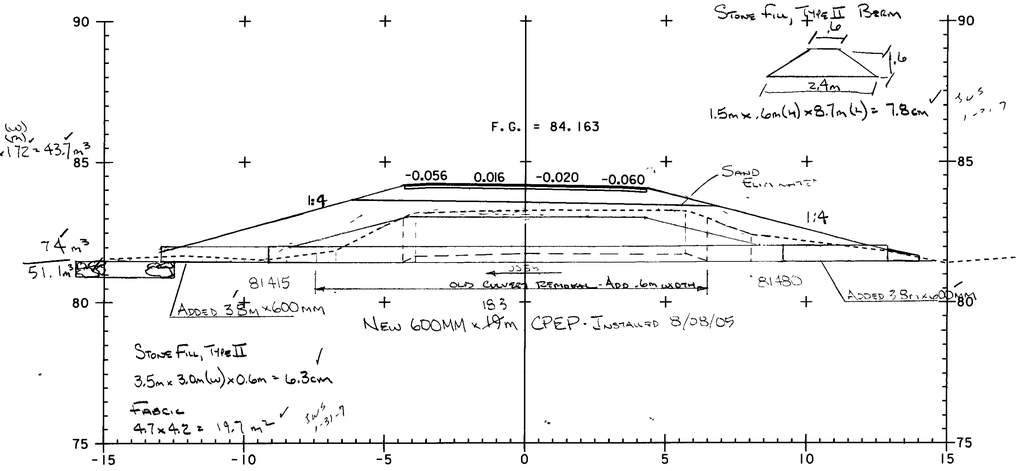

4+492
FIELD PROFILE

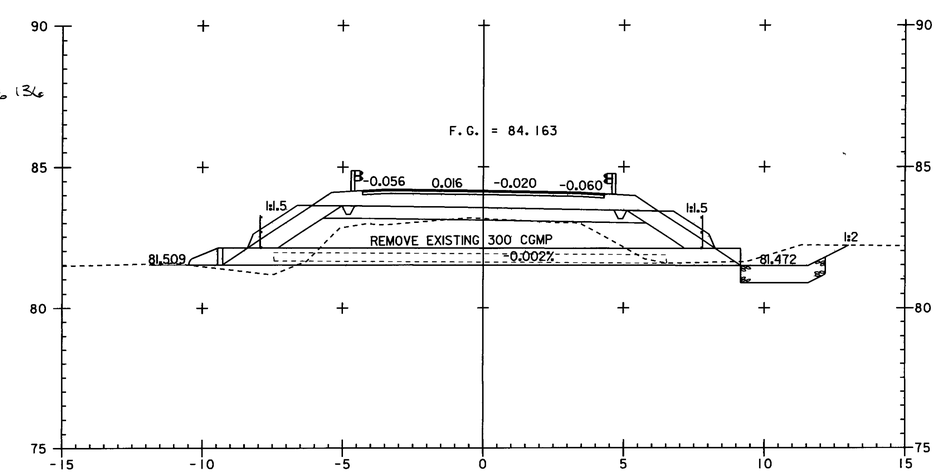

4+492
DESIGN SECTION

Drainage Sheet # 17

474 Dr...

Trench Earth

Headwalls

Outlet
3.25m x 1.675m x 1.35m(D) = 7.3cm

Inlet
3.25 x 1.675m x 1.20m(D) = 6.5cm

Culvert

From Outlet 0-15m
$\left[\left(\frac{.75+.85}{2} \times 1.7\right) + \left(\frac{.85+1.50}{2} \times 1\right) + \left(15 \times 12.9\right) + \left(\frac{1.5+1.35}{2} \times 1.6\right) + \left(\frac{1.35+.45}{2} \times 9\right)\right] \times 2.2m = 52.3$ cm

From Outlet Over 1.5m
$\left[\left(\frac{0.0+1.15}{2} \times 1.7\right) + \left(\frac{1.15+1.25}{2} \times 4.8\right) + \left(\frac{1.25+1.1}{2} \times 5\right) + \left(\frac{1.1+0.0}{2} \times 1.4\right)\right] \times 2.2m = 29.5cm \times 1.5 = 44.2cm$

Stone Fill c Inlet (Exc) 33.6 - (0.5m x 3.25m x 0.7) = 32.5cm

Stone Fill c Outlet (Exc) 13.4 - (0.5m x 3.25 x 0.6) = 12.4

155.2 cm

WRF
12-11-06
SWS
1-19-7

Granular Backfill for Structures

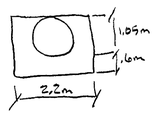

Culvert (Unopened)
0.6m x 2.2m x 19.2m = 25.3cm

Headwall (Unopened)
(0.6m x 3.25 x 1.675) x 2 = 6.5cm

Culvert
1.05m x 2.2m x 19.2 = 44.4cm

76.2cm

Earth Borrow

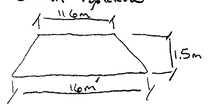

$\frac{11.6+16.0}{2} \times 1.5 \times 2.2 =$ ~~38.3cm~~ 45.54m x 1.15 = ~~44.0cm~~ 52.4cm

WRF 12-11-06 SWS 1-19-7

✓WRF
01-29-07

To Bk 2, Pg 148

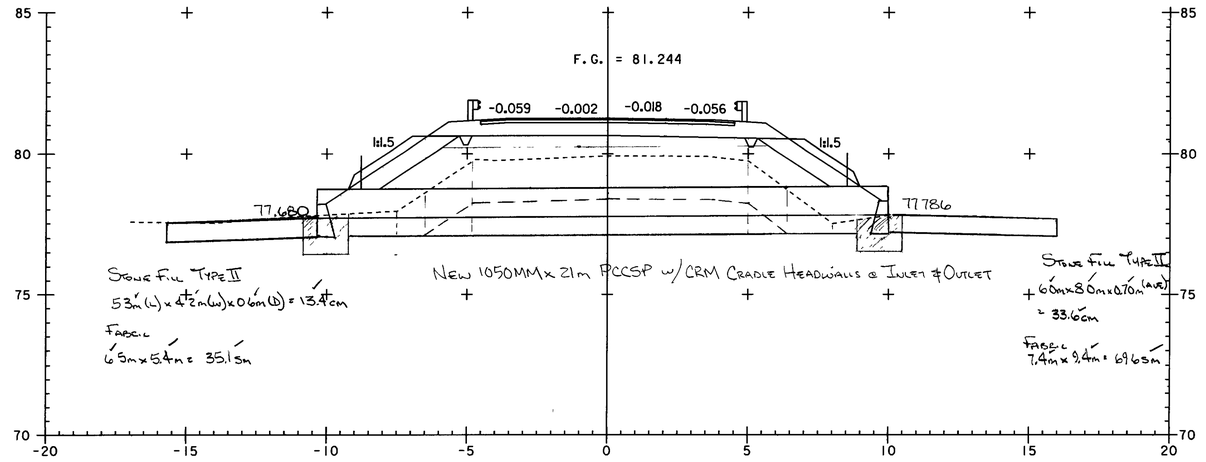

5+027.000
ASKEW = 72°22'16" LT
FIELD PROFILE

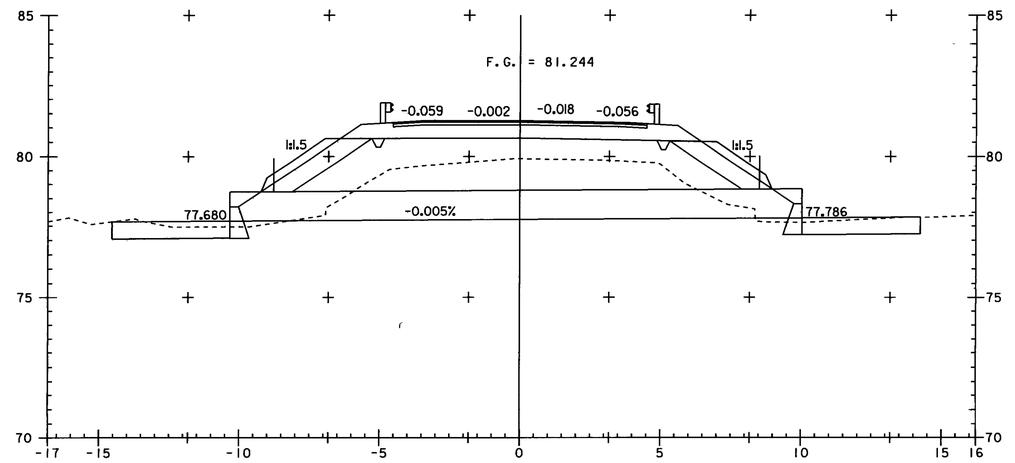

5+027
ASKEW = 72°22'16" LT
DESIGN SECTION

COLVERT: $\frac{0.45+0.7}{2} \times 2.55m = 1.55m$

$\frac{0.7+0.05}{2} \times 1.9 = 1.2$ m

$\frac{1.05 \times 10.3}{2} = 10.8$ sm

$\frac{1.05+0.6}{2} \times 1.2 = 1.05$ m

$\frac{1.6+1.03}{2} \times 4.1 = 7.8$ m

17.86m x .05m x 1.1 = 1.1 = 34.9cm

CHECKS w/36.7±

Trench Excavation of Earth:

Stone pad @ outlet: 2.4m w x 3.9m l x 1.5m d = 14.0cm

(2.4m x 3.9 x 0.3) 1.5 = 4.2cm } 18.2cm

Stone pad @ Inlet = 3.2m(l) x 3.4m(w) x 0.75m(d) = 8.2cm

Colvert: avg depth = $\frac{0.45+0.95+1.35+1.25+0.45+0.3}{6} = 0.792m$

Length = 21.95m

width = 2.11m

∴ vol = 0.792m x 21.95m x 2.11m = 36.7cm

total = 54.9cm 63.3cm

WRF 12-12-06

5" - Stone: 2.4m x 3.9m x 1.8md = 16.8cm

900mm CPEP: 21.95m

Geotextile under stone Fill. 4m x 7.5m = 45sm

Granular Backfill for structures: 21.95m x avg depth $\frac{0+1.2+1.2+1.2+0}{5}$ x 2.11m wide =

= 33.3cm

GRANULAR: $\frac{0+1.05}{2} \times 3 = 1.6$

$\frac{1.05+1.2+1.2}{2} \times 16.9 = 17.3$ > Total = 20.2 sm x 2.11m = 42.6sm

$\frac{1.05+0.0}{2} \times 2.9 = 1.3$ sm

WRF 12-12-06

Inlet Stone Fill Type II

5.8m (l) x $(\frac{1.8+5.0}{2}$ m) w x 0.3m (h) = 59cm

Geotextile under Stone Fill

5.8m (l) x 3.4m = 19.7sm say 20sm

T. Bx =

Pg 152

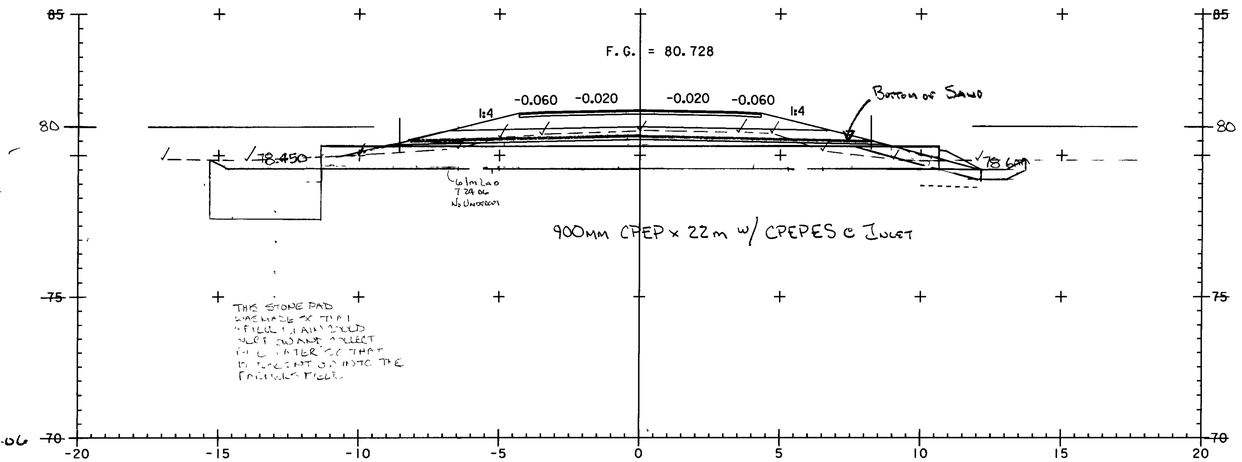

5+156.000
ASKEW = 90° 00' 00"
FIELD PROFILE

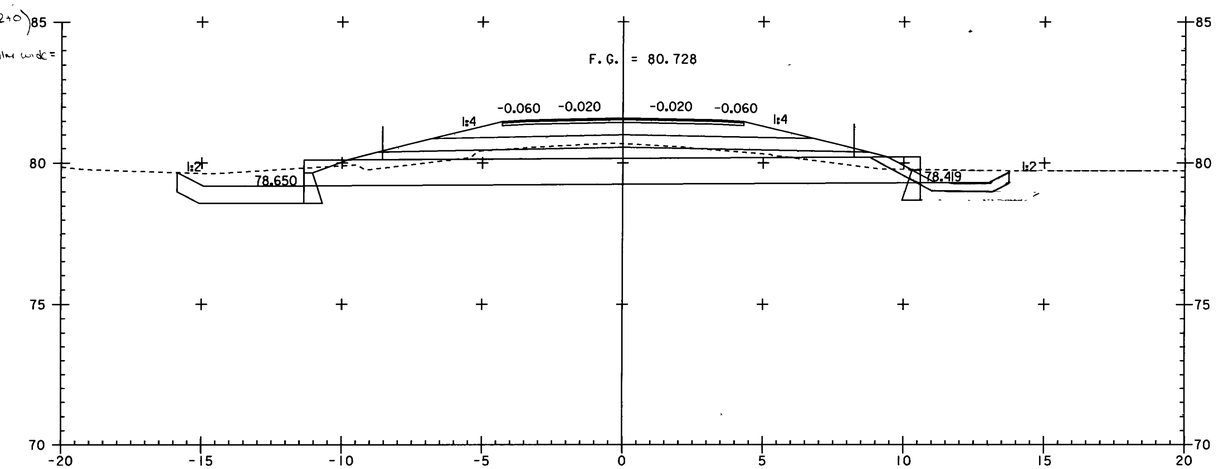

5+156.000
ASKEW = 90° 00' 00"
DESIGN SECTION

TRENCH EARTH

CULVERT FROM INLET

$\left[\left(\frac{0.2+0.3}{2}\times 55\right)+\left(\frac{0.3+0.8}{2}\times 2.4\right)+\left(\frac{0.8+0.95}{2}\times 51\right)+\left(\frac{0.95+0.85}{2}\times 6.7\right)+\left(\frac{0.85+0.4}{2}\times 7\right)+\left(\frac{0.4+0.0}{2}\times 2.5\right)\right]\times 1.72m = 24.3cm$

1.38 1.32 1.46 1.03 0.44 0.50

STONE FILL

$2.4m(L)\times 0.9m(W)\times 0.6m(D)$ = 1.3cm

256cm

GRANULAR BACKFILL FOR STRUCTURES

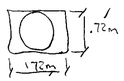

23.7m (AVE LENGTH) x 1.72 x 0.72 = 29.4cm

EARTH BORROW

0.2m (AVE)(D) x 1.72m(W) x 21.5m (AVE LENGTH) = 7.4cm x 1.15 = 8.5cm

WRF JWS
12 12-06 1-19 7
To Bk 2A, Pg 10

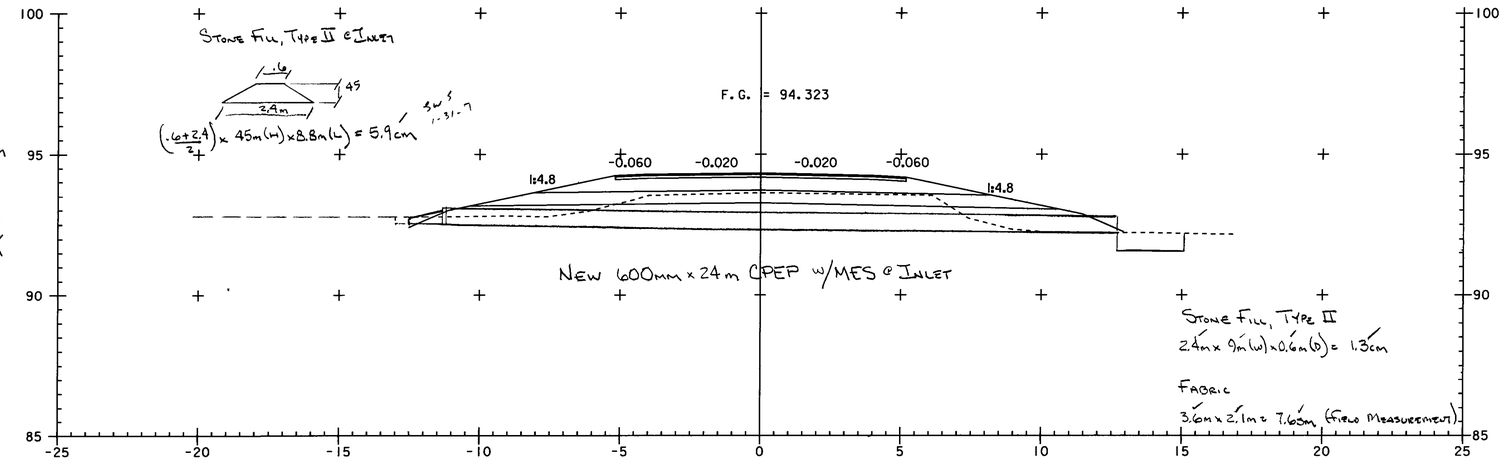

5+843
ASKEW = 56° 10′ 08″ LT
FIELD PROFILE

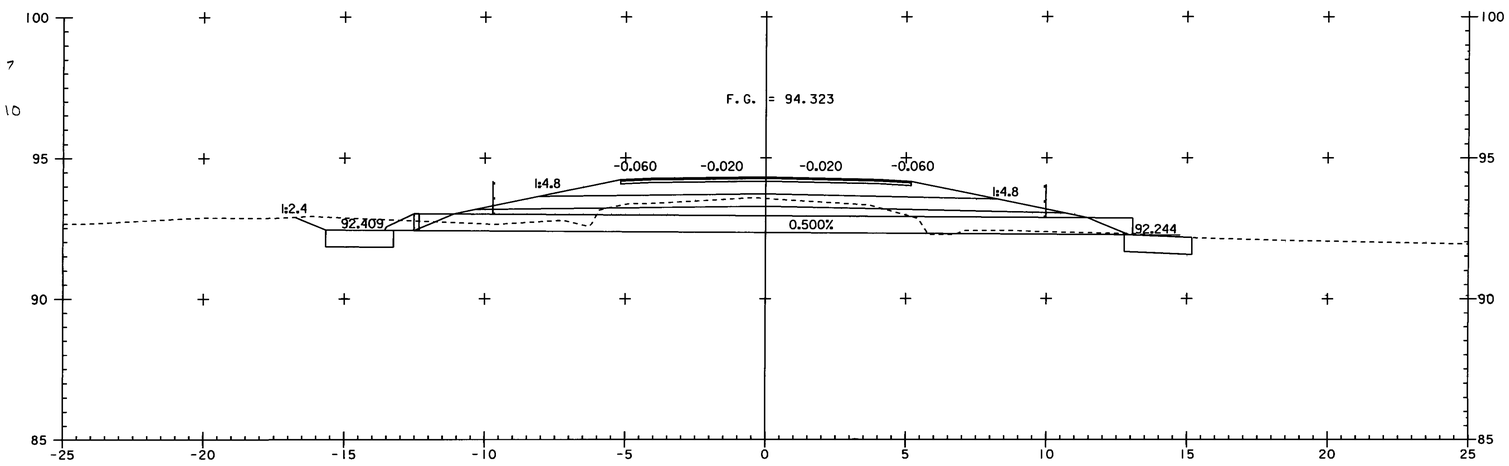

5+843
ASKEW = 56° 10′ 08″ LT
DESIGN SECTION

DRAINAGE SHEET # 20

477-Dra.

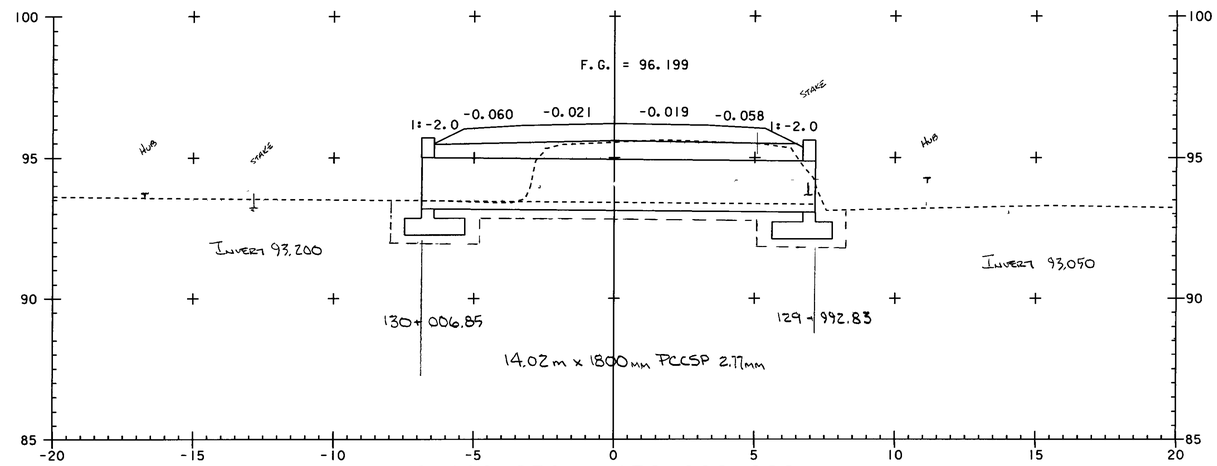

6+189.250 = 130+000.000
ASKEW = 81°00'00"
DESIGN SECTION
W/ FIELD PROFILE

DRAINAGE SHEET # C1

478-Drainage

VDOT Metric

Structure Excavation

Station	Dist	Area SM	Vol CM
129+990.2		0	74
	1.4	10.5	
+991.6	0.9		10.4
+992.5	2.4	12.5	36.6
+994.9		18.0	
+994.9	3.1	10.6	32.9
+998.0	4.2	10.6	43.5
130+002.2	1.1	10.1	6.8
+003.3	1.5	23	3.5
+004.8		2.1	
+004.8	2.4	7.2	27.1
+007.2	0.9	15.4	12.2
+008.1	1.4	11.8	8.3
+009.5		0	

188.5 CM

Unclassified Channel Excavation

Station	Dist	Area SM	Vol CM
129+986		3.0	
	4.2		12.6
+990.2	1.4	3.0	2.8
+991.6		1.0	
130+008.1	1.4	1.3	3.0
+009.5	1.5	3.0	4.5
+011.0		3.0	

22.9 CM

Granular Backfill for Structures

Subject 1.5 for Area of pipe

Headwall - Sheet # 235

129+994.9	3.1	9.2	28.5
+998.0	4.2	9.2	38.4
130+002.2	1.1	9.1	13.0
+003.3	1.5	14.5	21.8
+004.8		14.5	

Headwall - Sheet # 235 — 35.6 CM

172.9 CM

Stone Fill Type II and Geotextile under Stone Fill

Station	Dist	Area SM	Vol CM	Length (m)	SM
129+986		3.0		6.4	
	4.2		12.6		26.9
+990.2	1.4	3.0		6.4	
			4.3		8.4
+991.6	1.1	3.2		5.6	
			2.8		4.7
+992.7		1.8		3.0	
130+007	1.1	1.8		3.0	
			2.8		4.7
+008.1	1.4	3.2		5.6	
			4.3		8.4
+009.5	1.5	3.0		6.4	
			4.5		9.6
+011.0		3.0		6.4	
			31.3 CM		62.7 say 63 SM

WRF 01-18-06
JWS 1-29-7

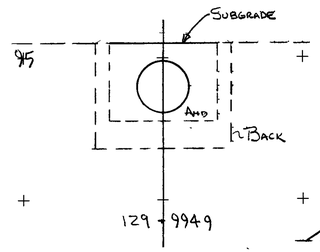

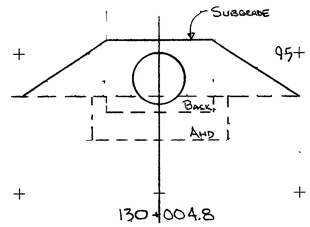

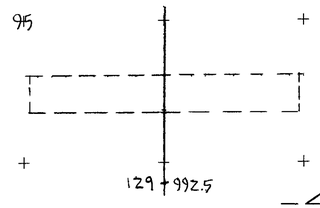

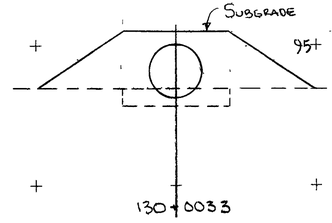

Butt Stone Fill @ 130+011.0
SF 3.0

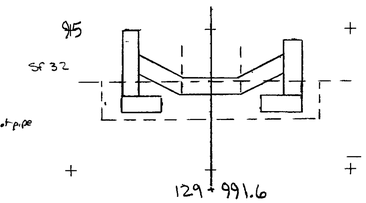

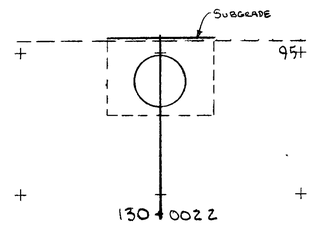

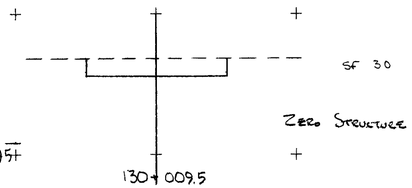

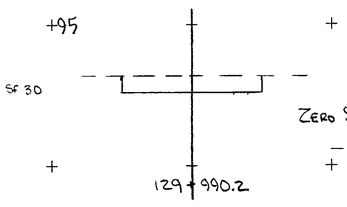

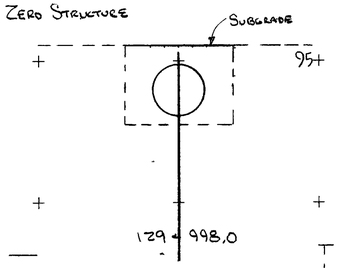

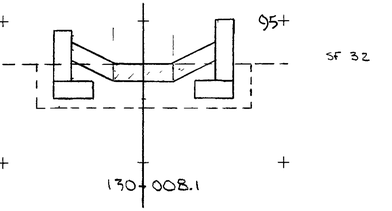

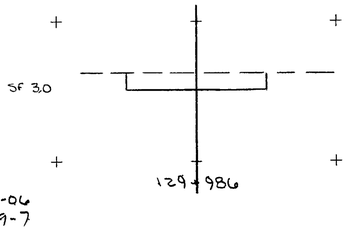

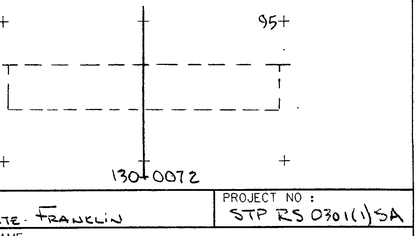

PROJECT: Highgate - Franklin	PROJECT NO: STP RS 0301(1)SA
DESIGN FILE NAME: / IPARM FILE NAME:	PLOT DATE: 01-MAY-1996
6-189,250 - Cross Sections & Quantities	SHEET: 21-A OF

478 A - Drainage

TRENCH EARTH

INLET HEADWALL

3.1m(L) x 1.65m(W) x 0.95m(D) = 4.9cm

OUTLET HEADWALL

3.1m(L) x 1.65m(W) x 0.95m(D) = 4.9cm

STONE FILL @ INLET

13.0cm - (3.1m x 0.5m x 0.6m) = 12.1cm

STONE FILL @ OUTLET

10.4cm - (0.9cm) = 9.5cm

CULVERT

FROM INLET 0, 1.5m

$\left[\left(\frac{0.4+0.6}{2} \times 32\right) + \left(\frac{0.6+1.5}{2} \times 2\right) + (1.5 \times 98) + \left(\frac{1.5+0.3}{2} \times 33\right) + (0.3 \times 39)\right] \times 2.04 = 46\text{cm}$

OVER 1.5m

$[(0.2 \times 09) + (0.1 \times 56)] \times 2.04 = 1.5\text{m} \times 1.5 =$ 2.2cm

79.6cm

GRANULAR BACKFILL FOR STRUCTURES

UNDER HEADWALLS

$(1.65\text{m} \times 3.1\text{m} \times 0.3) \times 2 =$ 3.1cm

UNDER CULVERT

$2.04\text{m} \times 22.2\text{m} \times 0.3\text{m} =$ 13.6cm

TO TOP OF CULVERT

$2.04\text{m} \times 10.4\text{m} \times 2.3\text{m} =$ 48.8cm

65.5cm

EARTH BERROW

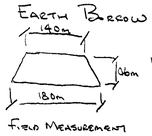

FIELD MEASUREMENT

$\frac{1.4+1.8}{2} \times 0.6\text{m} \times 2.04\text{m} = 1.96\text{cm} \times 1.15 = 22.5\text{cm}$

WRF 12-13-06

YWS 1-19-7

T. BK 2A, PG 20

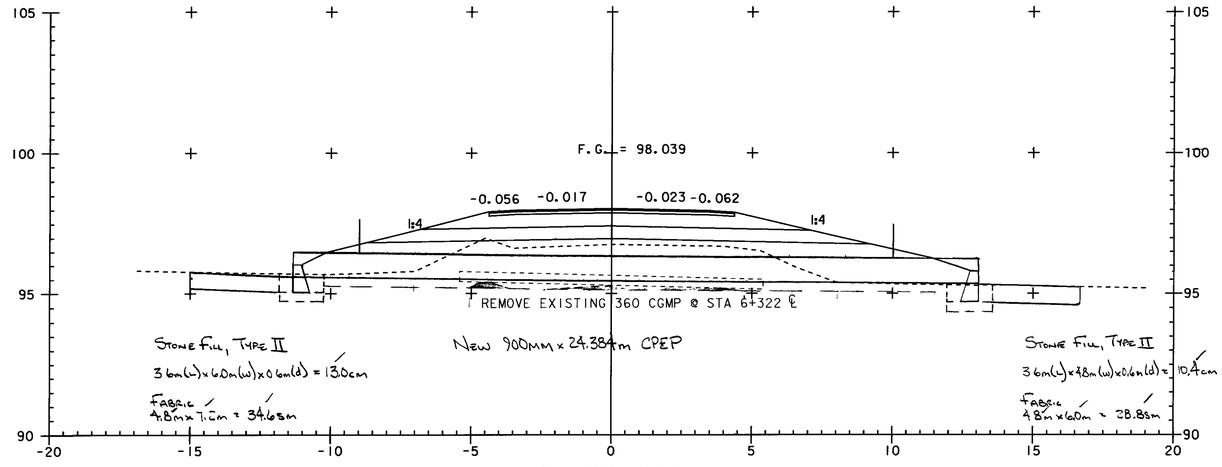

6+322.000
ASKEW = 79°36'24" LT
FIELD PROFILE

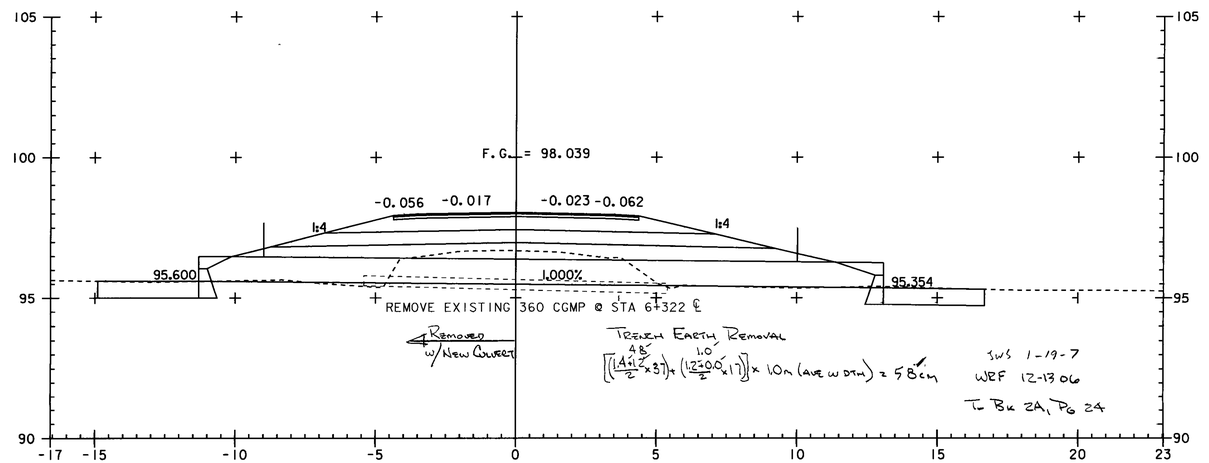

6+322.000
ASKEW = 79°36'24" LT
DESIGN SECTION

DRAINAGE SHEET 7 OF 22

Trench Earth

Inlet Headwall
$(\frac{0.9+1.5}{2}) \times 1.68m \times 3.25m$ = 6.6 cm

Outlet Headwall,
$1.35m \times 1.68m \times 3.25m$ = 7.4 cm

Culvert
From Inlet 0-1.5m
$\left[(\frac{1.48+1.5}{2} \times 1.1 \cdot (1.5 \times 21.3) + (\frac{7.32+0.9}{2} \times 6.1) + (0.9 \times 3.9)\right] \times 2.2m$ = 97.4 cm

From Inlet Over 1.5m
$\left[(\frac{0.0+0.6}{2} \times 33) + (\frac{0.6+0.9}{2} \times 98) + (0.9 \times 60) + (\frac{0.9+0.9}{2} \times 22.1)\right] \times 2.2m = 324 \times 1.5$ = 48.6 cm

Stone Fill Exc. Outlet
21.6cm - (0.5m x 0.6m x 3.25m) = 20.6 cm

Stone Fill Exc. Inlet
46.0cm - (1cm) = 45.0 cm

Outlet Ditch
$(\frac{2.9+1.1}{2} \times 98) + (\frac{1.1+0.0}{2} \times 18)$ = 20.6 cm

Inlet Ditch
$(\frac{0.0+2.5}{2} \times 25) + (\frac{2.5+0.0}{2} \times 42)$ = 10.9 cm

257 cm

Granular Backfill for Structures

Behind Headwalls
$(0.6m(D) \times 0.6m(W) \times 3.25m) \times 2$ = 2.3 cm

Under Culvert
$32.3m \times 0.3m(D) \times 2.2m(W)$ = 21.3 cm

Culvert
$33.1m \times 1.2m(D) \times 2.2m(W)$ = 89.4 cm

111.0 cm

Earth Borrow

$\frac{30.9+22.0}{2} \times 0.86m$ (Field Measured) $\times 2.2m(W)$ = 50.0 cm $\times 1.15$ = 57.5 cm

WEF 12-13-06 JWS 1-19-7

T. Bk 2A, Pg 36

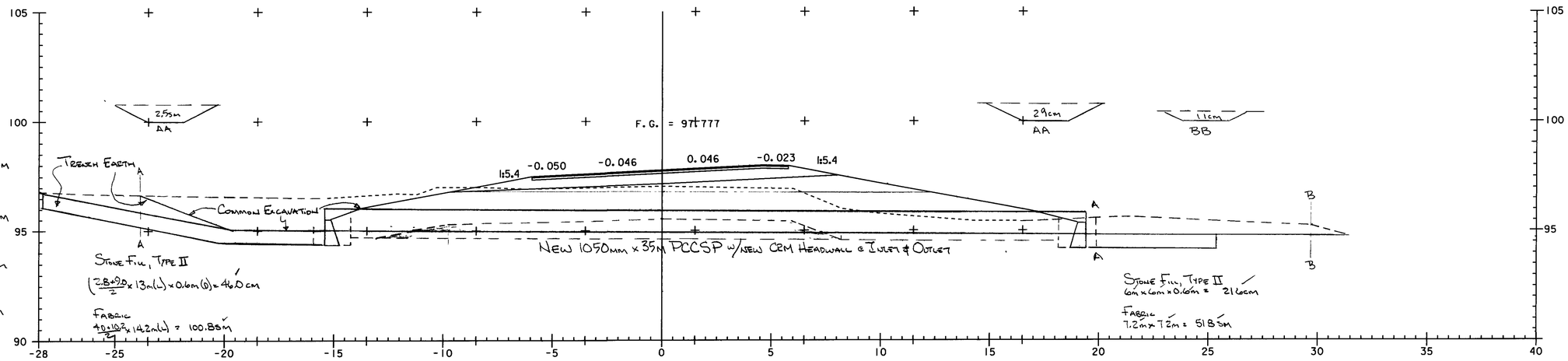

6+566
ASKEW = 47°50'26" LT
FIELD PROFILE

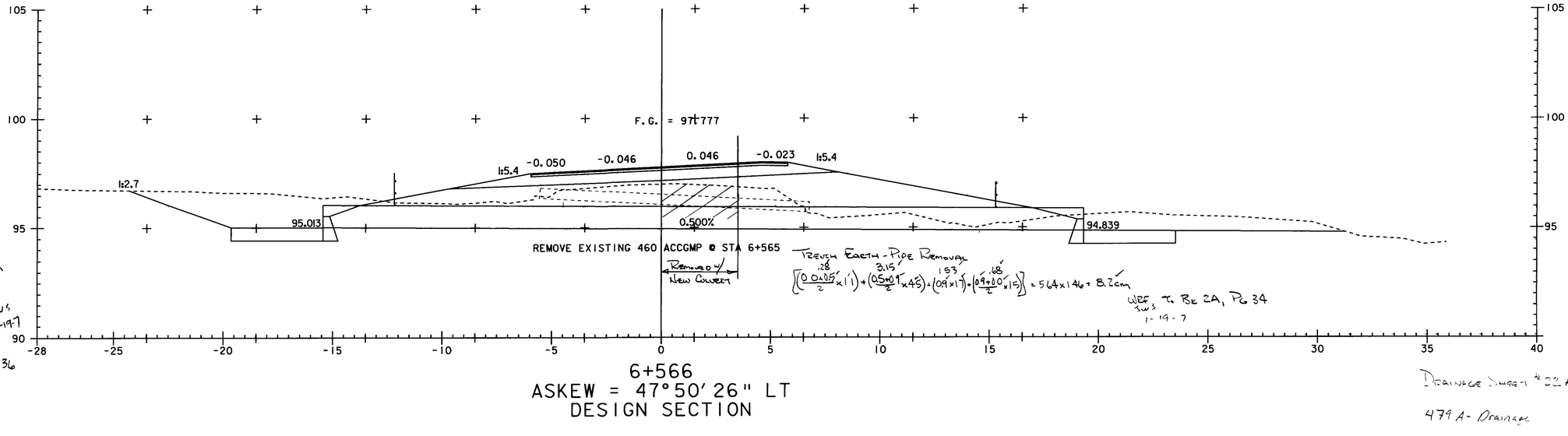

6+566
ASKEW = 47°50'26" LT
DESIGN SECTION

Drainage Sheet # 22A

479A - Drainage

Metric

Trench Earth - 0-1.5m

Undercut
0.9m(L)×0.3m(D)×1.54(W) = 0.42 cm

Pipe (Installed 04 24 06)
$\left(\frac{0+0.4}{2}\times1.5\right)+\left(\frac{0.4+0.9}{2}\times4.2\right)+\left(\frac{0.9+0.7}{2}\times3\right)+\left(\frac{0.7+0}{2}\times0.7\right)=$
$(0.30 + 2.73 + 2.40 + 0.24)\times1.54$ = 8.73 cm

Sub Total - 9.15 cm
135 cm
1050 cm

Inlet
$\left[\left(\frac{0+0.5}{2}\times1.5\right)+\left(\frac{0.5+0}{2}\times2.0\right)\right]$ 1.54m = 0.5m²

DKT 30-06
WRF 04-25-06

Granular Backfill for Structures
(To 0.3m over Culvert)
87m(L)×1.54m(W)×0.75m(D) = 10.05 cm
4.2m(L)×1.54m(W)×1.05m(D) = 6.79 cm
16.84 cm

DKT 1-10-06
WRF 04-25-06

To Bk 2A Pg 59

Remove Existing 300mm Accomp
$\left(\frac{0.75+1.00}{2}\times1.2\right)+\left(\frac{1.00+1.20}{2}\times4.2\right)+\left(\frac{1.20+1.0}{2}\times3\right)+\left(\frac{1.0+0}{2}\times1\right)\times1.54$ = 12.81 m²

WRF
03-05-06

To Bk 2A, Pg 58

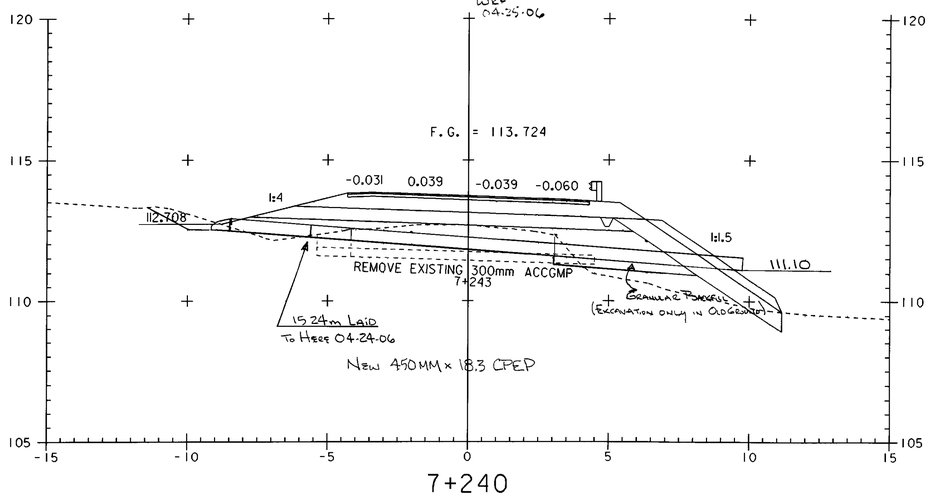

7+240

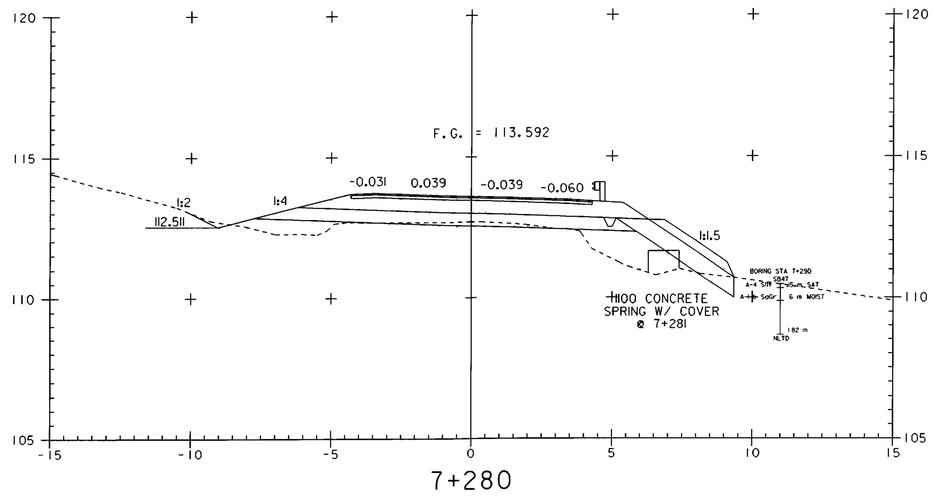

7+280

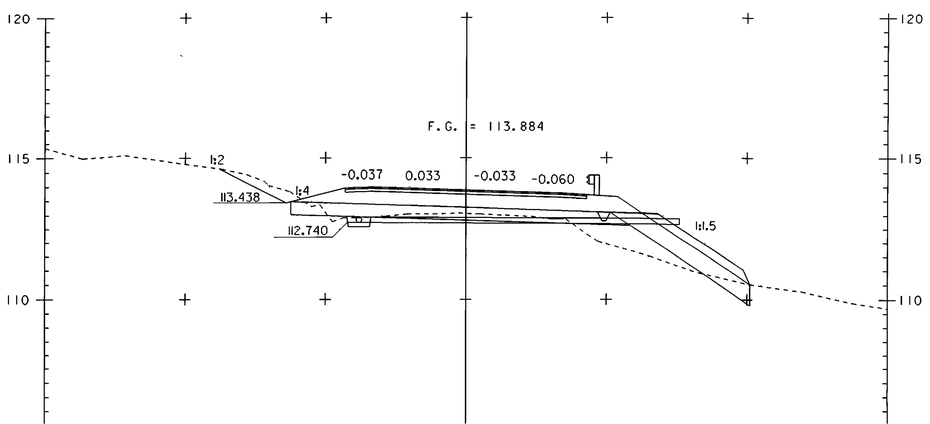

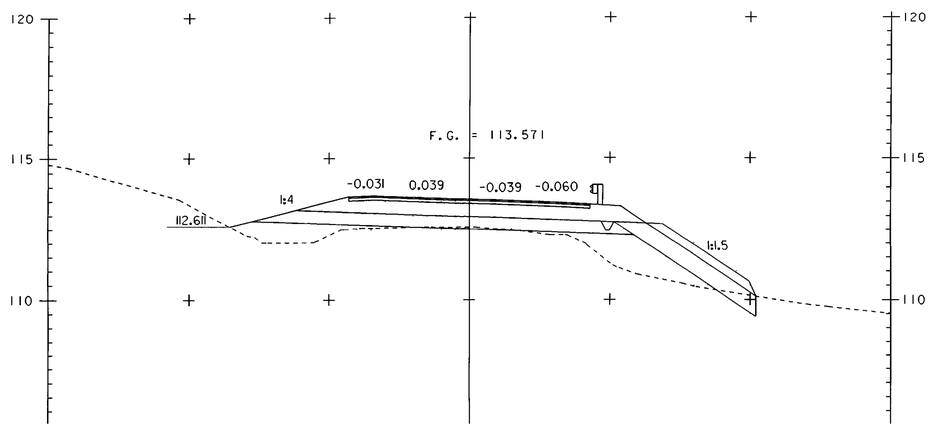

Drainage Sheet # 23

480 - Drainage

Trench Earth

Inlet Ditch 0-1.5m

$$\left(\frac{8.2+13.4}{2}\times 4.1\right)+\left(\frac{13.4+8.1}{2}\times 3.6\right)+\left(\frac{8.1+(13\times 0.6)}{2}\times 2.5\right)+(2m\times 3.0m\times 0.6m) = 137.9cm$$

(A-A, B-B; B-B, C-C; C-C, 7.8)

44.28 + 38.70 + 19.88 + (minus headwall (0.5m × 0.6m × 3.1m) 36.093)

Inlet Ditch Over 1.5m

$$\left(\frac{0.0+1.0}{2}\times 4.1\right)+\left(\frac{1.0+0.0}{2}\times 2.5\right) = 3.3cm\times 1.5 = 50cm$$

(A-A, B-B; B-B)

2.05 + 1.25

Outlet Ditch

2.9cm · 0.5 × 0.6 × 1.6 = 2.4cm

Inlet Headwall

3.1m(L) × 1.65m(W) × 1.0m(ave D) = 51cm

Outlet Headwall

3.1m(L) × 1.65m(W) × 0.8m(ave D) = 41cm

Trench Earth 0-1.5m (Culvert)

From Inlet

$$\left(\frac{0.8+0.4}{2}\times 1\right)+(0.4\times 0.6)+\left(\frac{0.4+1.5}{2}\times 1.8\right)+\left(1.5\times 9.1\right)+\left(\frac{1.5+0.8}{2}\times 1.1\right)+\left(\frac{0.8+0.6}{2}\times 2.3\right)\times 2.04 = 39.0cm$$

(1.0; 0.24; 1.71; 13.65; 1.26; 1.61)

Culvert - over 1.5m

$$\left(\frac{1.0+0.4}{2}\times 4.6\right)+(0.4\times 3.6)+\left(\frac{0.4+0.0}{2}\times 0.9\right)\times 2.04 = 5.2\times 1.5 = 78cm$$

(0.92; 1.44; 0.18)

201.3cm

JWS 1-29-7

Granular Backfill for Structures

Under Culvert

17.4m × 2.04m × 0.3m = 10.6cm

To Top of Culvert

17.3m × 2.04m × 1.04m = 36.7cm

47.3cm

Earth Borrow

$$\frac{15.4+11.8}{2}\times 2.04m\times 0.85m(s)\,(\text{Field Meas}) = 23.6cm\times 115 = 27.1cm$$

JWS 1-22-7

WRF 12-14-06

T. Bk 2A, P. 60

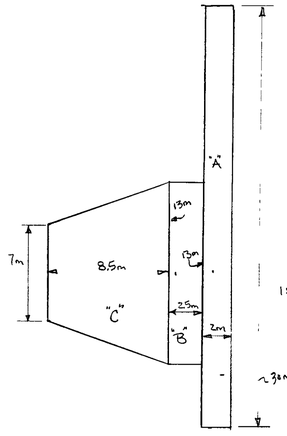

Stone Fill Type II

"A" = 2m × 3.0m × 0.6m = 3.6cm

"B" = 13m × 2.5m × 0.6m = 19.5cm

"C" = $\frac{7+13}{2}$ × 8.5m × 0.6m = 51.0cm

106.5cm

+ 2.9cm

109.4cm

Fabric

8.2m × 0.6m = 4.9

$\frac{8.2+14.2}{2}$ × 8.5m = 95.2

2m × 31.2m = 62.4

31.2m × 0.6m = 18.7

18.2m × 0.6m = 10.9

192.1sm

+ 11.8sm

203.9sm

Say 204sm

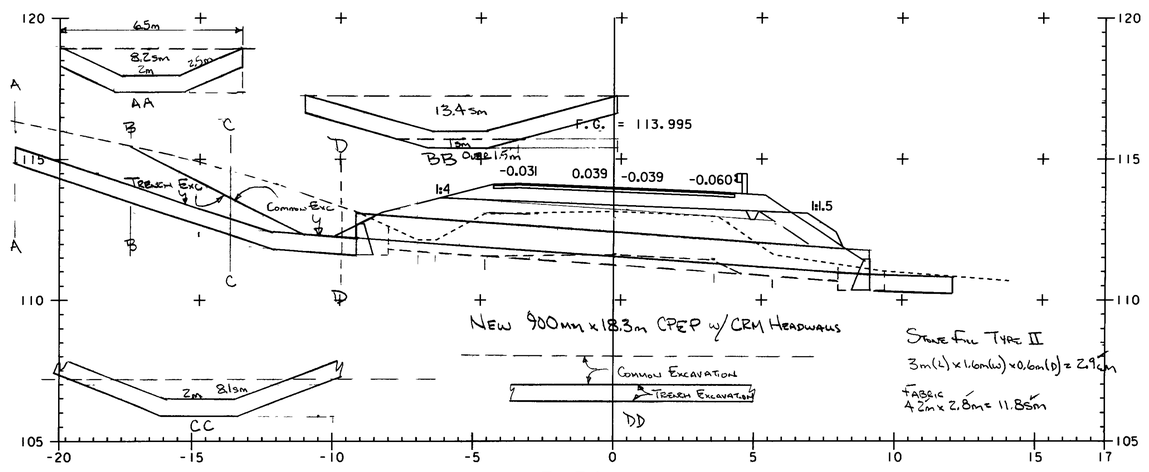

NEW 900mm × 18.3m CPEP w/ CRM Headwalls

Common Excavation

Trench Excavation

Stone Fill Type II

3m(L) × 1.6m(W) × 0.6m(D) = 2.9cm

Fabric

4.2m × 2.8m = 11.85sm

7+306

FIELD PROFILE

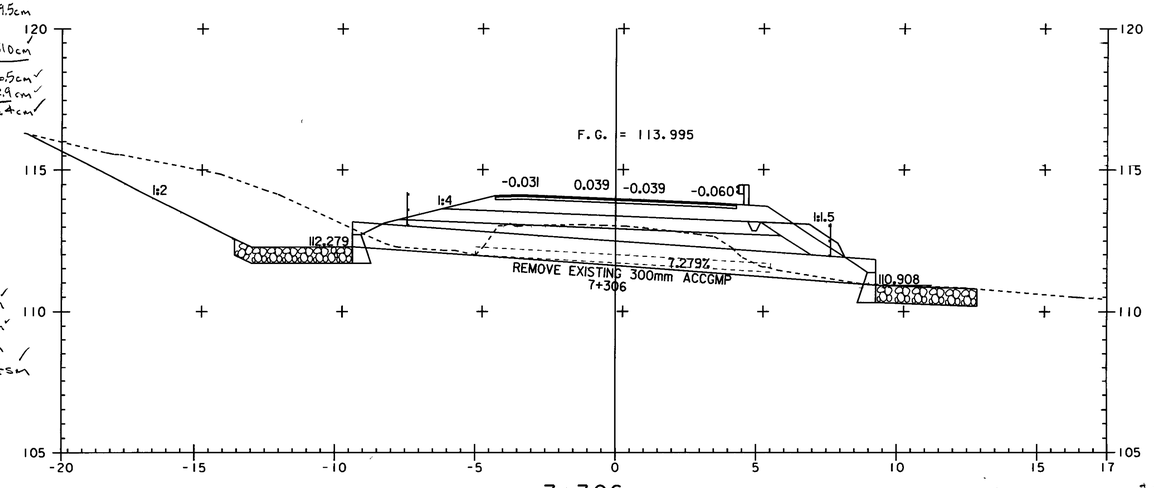

7+306

DESIGN SECTION

CONTINUED SHEET #24

TRENCH EARTH

DI 0-1.5m

4.5sm x 1.5m = 6.8cm

DI over 1.5m

4.5sm x .45m (ave Depth) = 2.0 x 1.5 = 3.0 cm

CULVERT

0-1.5m

$\left[(1.5m \times 11.6) + \left(\frac{1.5+0.75}{2} \times 1.4\right) + \left(\frac{0.75+0.55}{2} \times 23\right)\right] \times 1.72m$ = 35.1cm

Over 1.5m

$\left(\frac{0.0+0.5}{2} \times 1.1\right) + \left(\frac{0.3+1.0}{2} \times 8.4\right) + \left(\frac{1.0+0.0}{2} \times 1.8\right) \times 1.72 = 11.4cm \times 1.5 = 17.1cm$

STONE FILL - OUTLET

$\left(\frac{0.9+0.4}{2}\right) \times 3.5m \times 2.5m$ = 6.6cm

68.6cm

GRANULAR BACKFILL FOR STRUCTURES

DI

3.05m per Vertical meter x 1.7m = 5.1cm

CULVERT

UNDERCUT

15.2m x 1.72m x 0.3m = 7.8cm

PIPE

15.2m (ave) x 1.72m x 0.72m = 18.8cm

31.7cm

EARTH BORROW

13.3m (ave L) x 1.72m x 0.5m (Field Meas) = 11.4cm x 1.15 = 13.1cm

WBF 12-14-06

JWS 1-22-7

T. Bk 2A, Pg 66

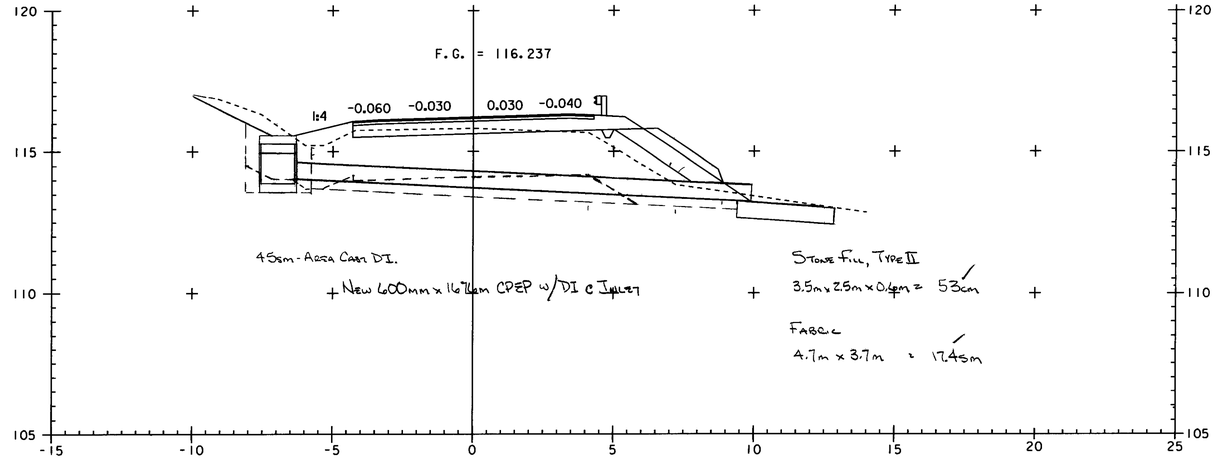

7+540

FIELD PROFILE

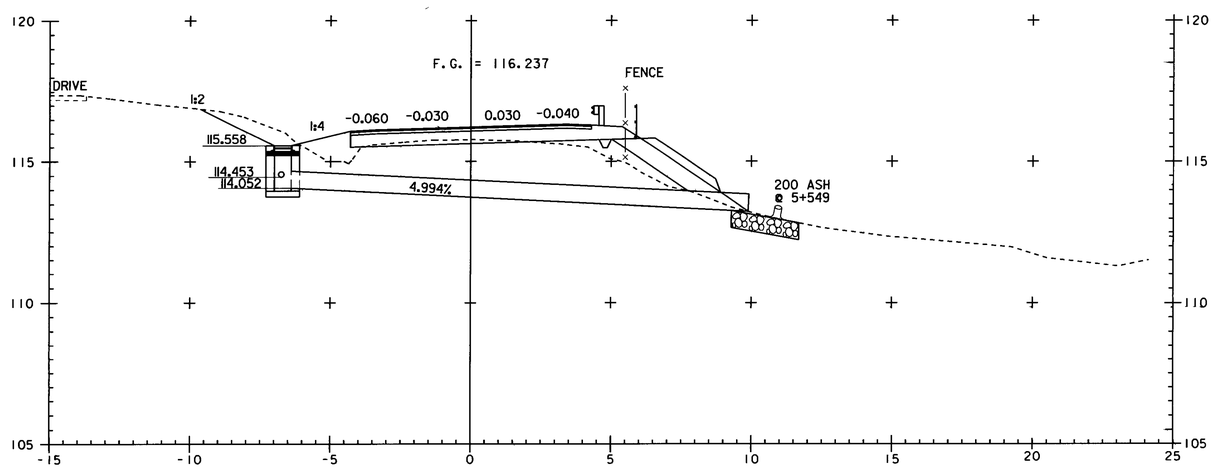

7+540

DESIGN SECTION

DRAINAGE LETTER 7-7

482-Dr...

TRENCH EARTH

DI 0-1.5m

4.5sm x 1.5m = 6.8cm

DI OVER 1.5m

4.5sm x 0.85m = 3.8cm x 1.5 = 57cm

CULVERT

FROM DI 0-1.5m

$(1.5 \times 11.3) + \left(\frac{1.5+0.6}{2} \times 1.9\right) + \left(\frac{0.6+0.3}{2} \times 1.6\right) \times 1.72m$ = 33.8cm

OVER 1.5m

$\left(\frac{0.4+0.6}{2} \times 1.6\right) + \left(\frac{0.0+0.3}{2} \times 4.3\right) + \left(\frac{0.3+0.4}{2} \times 5.3\right) + \left(\frac{0.4+0.0}{2} \times 1.1\right) \times 1.72 = 5.2cm \times 1.5 =$ 7.8cm

STONE FILL EXC.

$\left(\frac{0.9+0.6}{2} \times 2.4\right) \times 0.9m(w)$ = 1.6cm

55.7cm

GRANULAR BACKFILL FOR STRUCTURES

DI

30sm x 2m = 6cm

CULVERT

15.3m x 1.72m x 0.72m = 18.9cm

24.9cm

EARTH BORROW

13.6m (AVE L) x 1.72m (W) x 1.2m (AVE D) = 28.1cm x 1.15 = 32.3cm

WRF SWS 1-22-7

12-14-06

TO BK 2A, PG 72

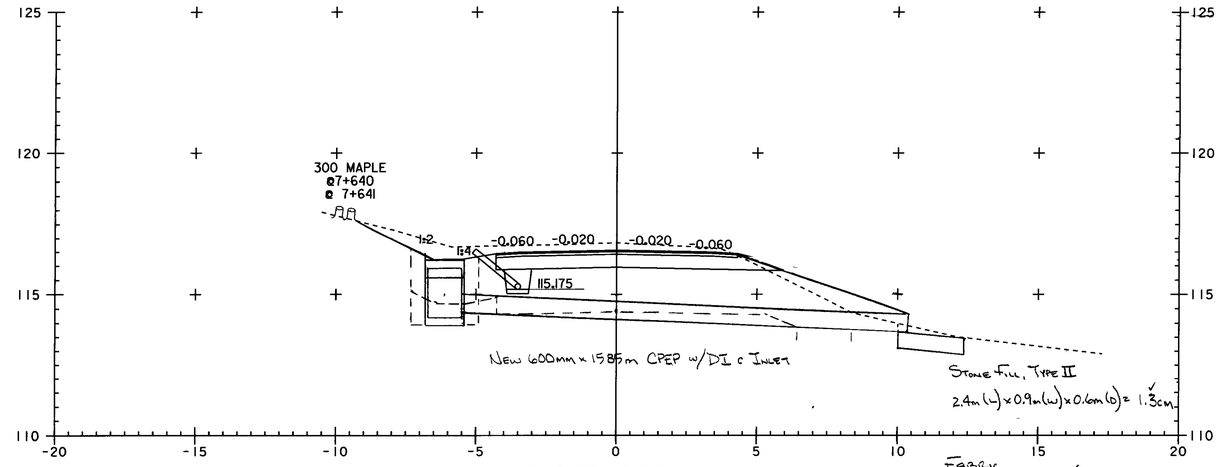

7+636.000
ASKEW = 90°00'00"
FIELD PROFILE

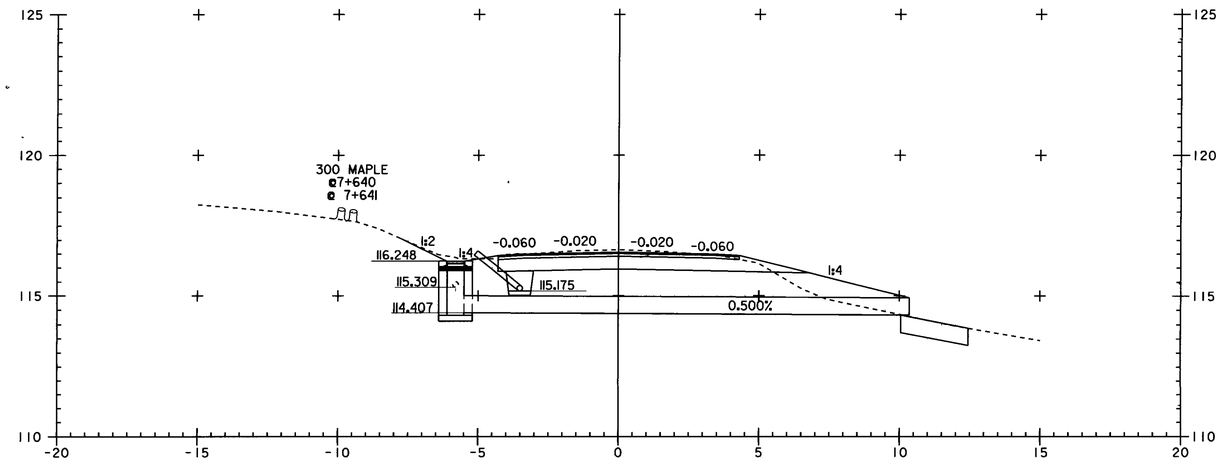

7+636.000
ASKEW = 90°00'00"
DESIGN SECTION

DRAINAGE SHEET # 26

483-Drainage

TRENCH EARTH

DI - 0.15m

4.5sm x 1.5m = 6.8cm

DI. OVER 1.5m

4.5sm x 0.55m = 2.5cm x 1.5 = 3.8cm

CULVERT

FROM DI, 0-15m

$\left[\left(\frac{1.3+1.5}{2}\times 0.4\right)+\left(1.5\times 0.5\right)+\left(\frac{1.5+1.1}{2}\times 2.7\right)+\left(\frac{1.1+0.6}{2}\times 1.3\right)\right]\times 1.88 =$ 39.3cm

OVER 1.5m

$\left[\left(\frac{0.0+0.3}{2}\times 0.3\right)+\left(0.3\times 0.5\right)+\left(\frac{0.2+0.4}{2}\times 4.3\right)+\left(0.4\times 3.4\right)+\left(\frac{0.4+0.0}{2}\times 2\right)\right]\times 1.88\times 1.5 =$ 9.1cm

STONE FILL EXC

$\left[\left(\frac{1.1+0.6}{2}\times 1.5\right)+\left(0.6\times 1.3\right)\right]\times 2.3$ = 47cm

63.7cm

GRANULAR BACKFILL FOR STRUCTURES

CULVERT

14.4m x 1.88m (w) 0.88m (D) = 23.8cm

DI

3.0sm x 1.9m = 5.7cm

29.5cm

EARTH BORROW

11.8m (AVE LENGTH) x 1.88m (w) x 1.3m (FIELD MEAS) = 28.8cm x 1.15 = 33.1cm

WRF 12-15-06

SWS 1-22-7

To Bk 2A, Pg 78

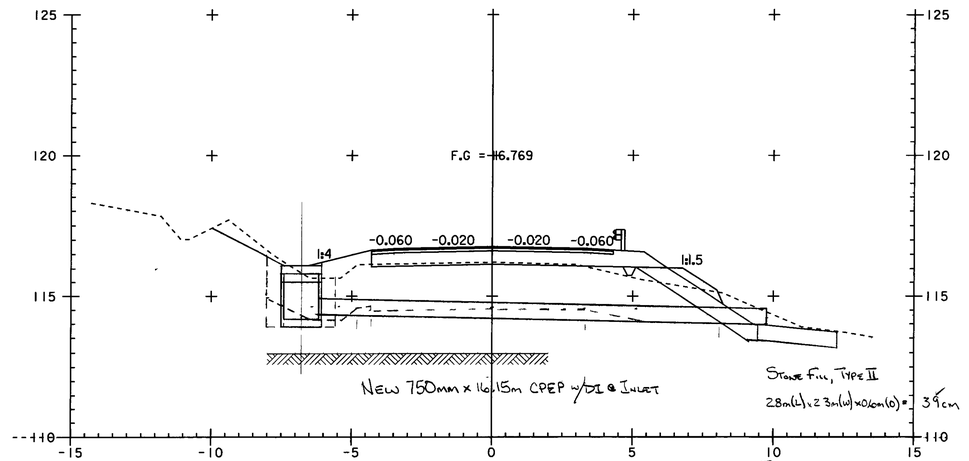

7+800
FIELD PROFILE

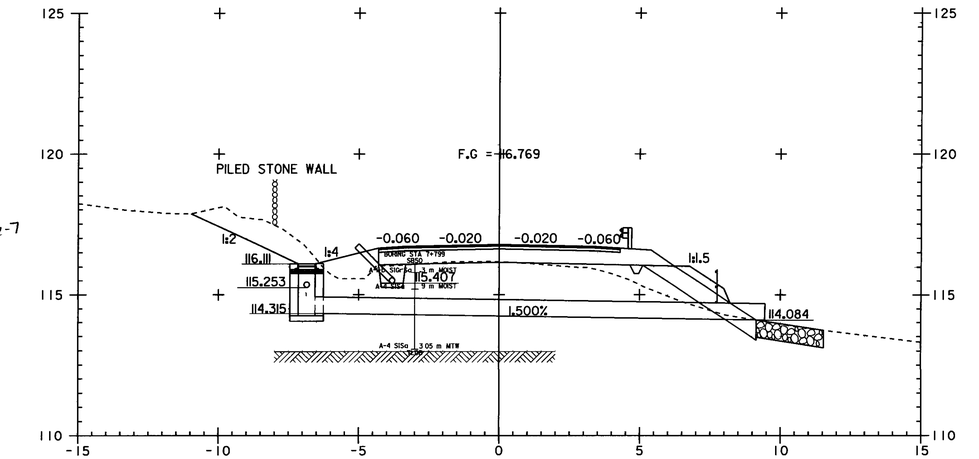

7+800
DESIGN SECTION

DRAINAGE SHEET # 27

484-Drain 1st

TRENCH EARTH

DI - 0-1.5m

4.5m x 1.1m (ave D) = 50cm

DI - Over 1.5m

NEGLIGIBLE

CULVERT

From DI 0-1.5m

$\left[\left(\frac{0.5+1.5}{2} \times 0.7\right) + (1.5 \times 11) + \left(\frac{1.5+0.3}{2} \times 3.9\right) + \left(\frac{0.3+0.2}{2} \times 2\right)\right] \times 1.72m$ = 36.5 cm

Over 1.5m

$\left[\left(\frac{0.0+0.6}{2} \times 4.9\right) + \left(\frac{0.6+0.9}{2} \times 3.2\right) + \left(\frac{0.9+0.0}{2} \times 2.9\right)\right] \times 1.72m$ = 8.9 cm

Stone Fill Exc.

$\left(\frac{0.75+0.65}{2} \times 2.4m\right) \times 0.9m$ = 1.5cm

51.9cm

GRANULAR BACKFILL FOR STRUCTURES

16.5m (ave length) x 1.72m (w) x 0.72m (d) = 20.4cm

EARTH BORROW

FIELD MEASUREMENT

$\left(\frac{8m+13m}{2}(w)\right) \times 1.5m(d) \times 1.72m(w) + 271cm \times 1.15$ = 31.2cm

WRF
12-15-06
T. Bk 2A, 86

SW's
1-22-7

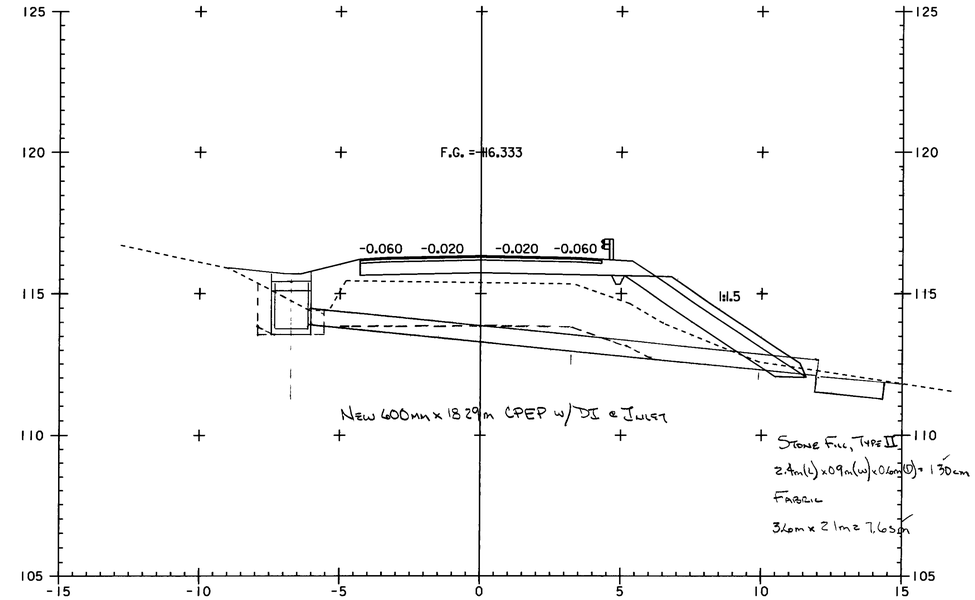

7+920
FIELD PROFILE

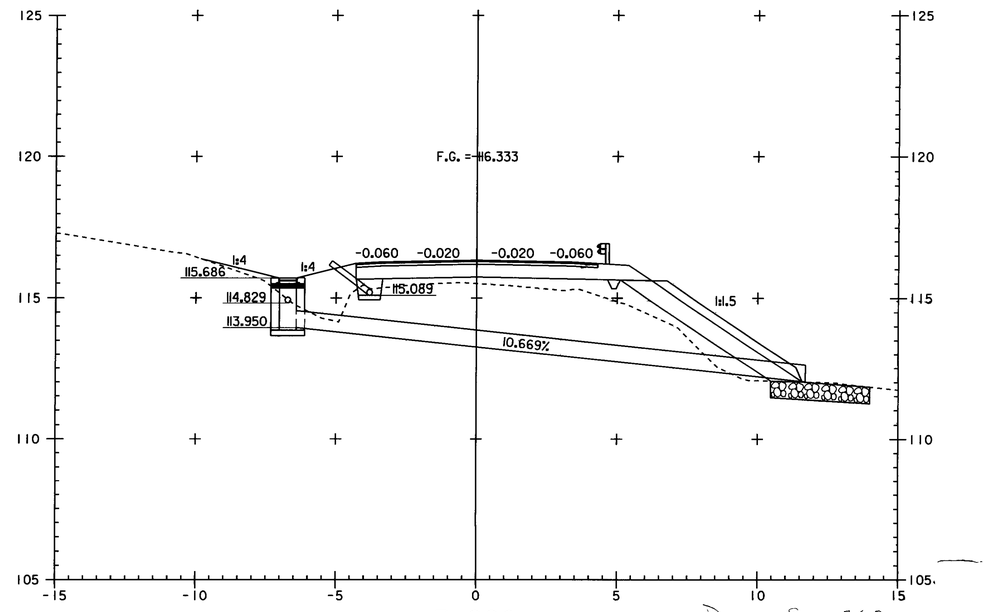

7+920
DESIGN SECTION

Drainage Sheet = 18

485-Dr

TRENCH EARTH

Stone Fill @ Inlet (Excavation same as Stone) — 6.7cm

Culvert

From Inlet 0-1.5m

$\left[\left(\frac{0.0+0.6}{2}\times 3.1\right)+\left(\frac{1.1+1.5}{2}\times 2.8\right)+\left(1.5\times 7.2\right)+\left(\frac{1.5+1.3}{2}\times 1.4\right)+\left(\frac{1.3+0.3}{2}\times 4.6\right)\right]\times 1.55$ = 30.8cm

From Inlet Over 1.5m

$\left[\left(\frac{0.0+0.5}{2}\times 6\right)+\left(\frac{0.5+0.0}{2}\times 12\right)\right]\times 1.55\text{m}\times 15$ = 4.2cm

Stone Fill @ Outlet

$\left[\left(\frac{0.9+0.6}{2}\times 3.3\right)\right]\times 1.8\text{ m}$ = 4.5cm

Undercut- 6m from Inlet

5.7m(L) x 1.55m x 0.3m = 2.6cm

48.8cm

Granular Backfill for Structures

18.5m (ave length) x 1.55m x 0.55m = 15.8cm

Undercut

5.7m(L) x 1.55m(W) x 0.3m(D) = 2.6cm

18.4cm

Earth Borrow

$13.8\text{m (ave length)}\times 1.55\text{m(w)}\times 1.1\text{m(ave depth)}$ = 23.5x1.15 = 27.0cm

WRF 12 15.06

SWS 1-23-7

T. Bk 2A, Pg 94

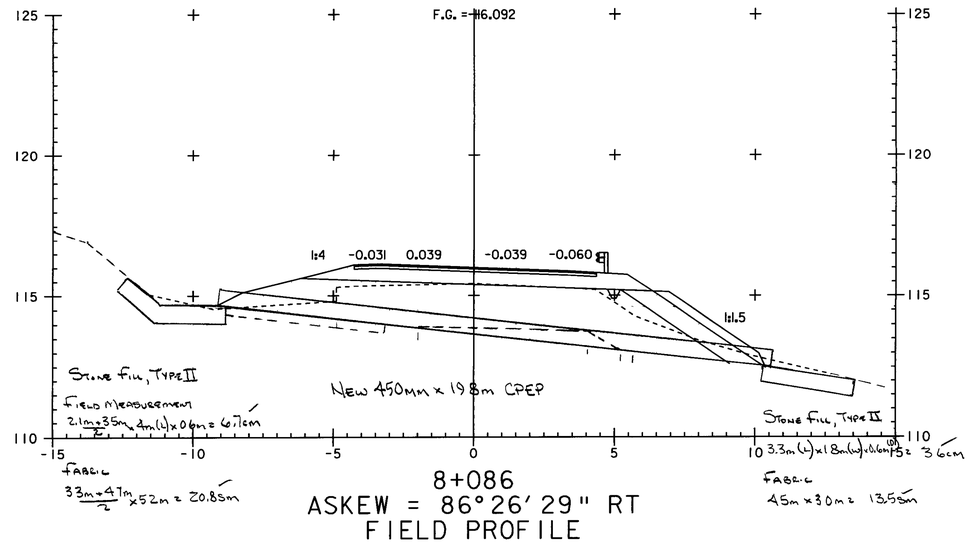

8+086
ASKEW = 86°26'29" RT
FIELD PROFILE

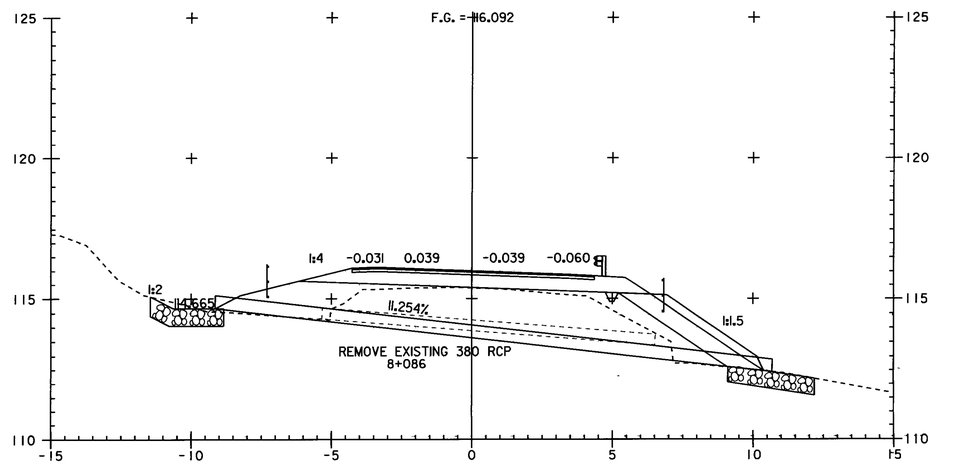

8+086
ASKEW = 86°26'29" RT
DESIGN SECTION

Drainage Sheet # 29

486-Drainage

TRENCH EARTH

DI 0-1.5m

4.5sm x 1.5m = 6.8cm

DI over 1.5m

4.5m x 55m (ave D) = 2.5cm x 1.5 = 3.8cm

CULVERT

From INLET 0-1.5m

$\left[\left(1.5m \times 15m\right) - \left(\frac{1.5+0.6}{2} \times 1.8\right) - \left(\frac{0.6+0.0}{2} \times 1.8\right)\right] \times 1.72m$ = 42.9cm

From INLET over 1.5m

$\left[\left(\frac{0.4+1.1}{2} \times 7\right) - \left(\frac{1.1+1.4}{2} \times 4.6\right) - \left(\frac{1.4+0.0}{2} \times 3.4\right)\right] \times 1.72m = 23cm \times 1.5$ = 34.5cm

STONE FILL EXC.

2.4m x 0.9m x 0.6m = 1.3cm

89.3cm

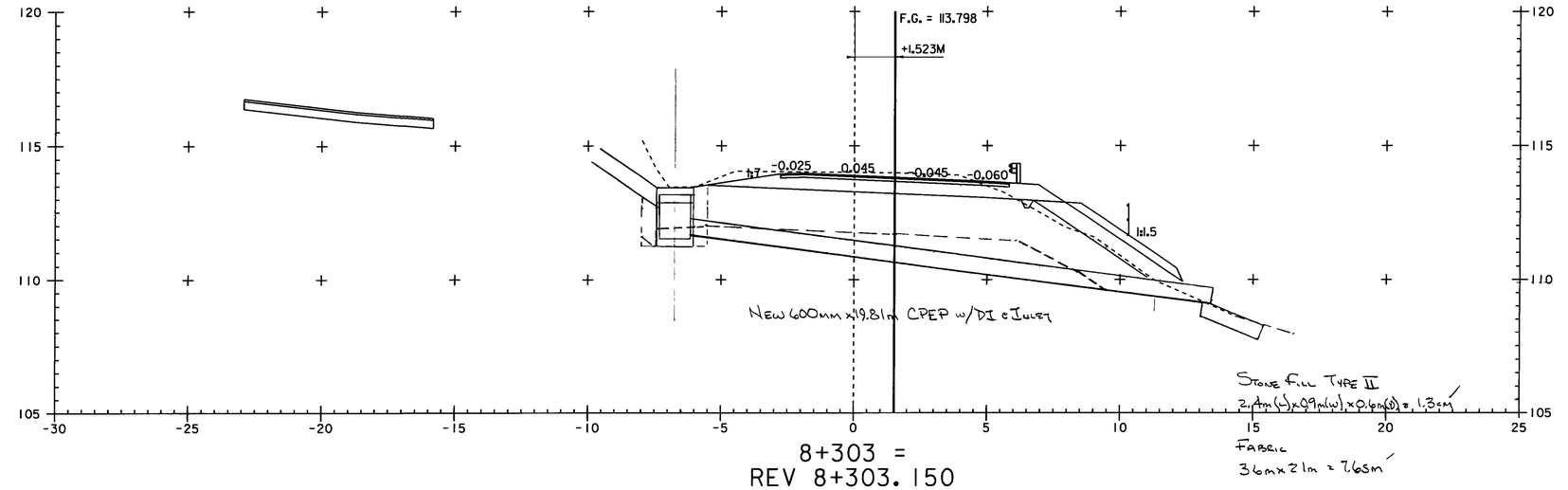

8+303 =
REV 8+303.150
FIELD PROFILE

GRANULAR BACKFILL FOR STRUCTURES

DI

3.0sm x 2m = 6cm

CULVERT

18.5m (AVE LENGTH) x 1.72m (W) x 0.72m (D) = 22.9cm

28.9cm

EARTH BORROW

$\left(\frac{16.6+12.2}{2}\right)$ x 1.7m x 1.8m (ave D) = 44.6cm x 1.15 = 51.3cm

WRF JWS
12-15-06 1-25-07

To Bk 2A, Pg 100

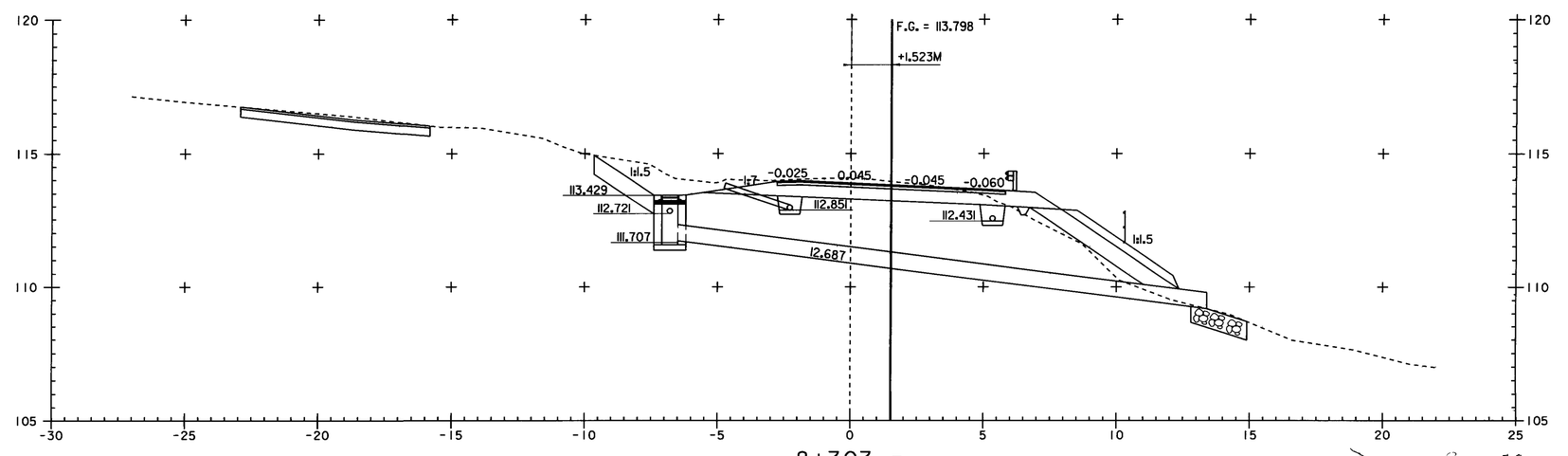

8+303 =
REV 8+303.150
DESIGN SECTION

DRAINAGE SHEET 7 OF 10
487-Drainage

TRENCH EARTH

Stone Fill c Inlet

$(3.5m(L) \times 5m(W) \times 0.7m(D)) + (18m(L) \times 5m(W) \times 1.5m(D)$ = 258cm

Headwall

$1.63m(W) \times 2.95m(L) \times 1.5m(D)$ = 7.2cm

Culvert - 0-1.5m

$\left[\left(0.1 \times 3.5\right) + \left(\frac{0.1+0.3}{2} \times 1\right) + \left(\frac{0.3+1.5}{2} \times 1.4\right) + \left(1.5 \times 9.9\right) + \left(\frac{1.5+0.4}{2} \times 3.2\right) + \left(0.4 \times 1\right)\right] \times 1.88$ = 37.8cm

Culvert - Over 1.5m

$\left(\frac{0.0+0.4}{2} \times 5.6\right) + \left(\frac{0.4+0.5}{2} \times 2.9\right) + \left(\frac{0.5+0.0}{2} \times 1.3\right) \times 1.88$ = 5.17cm x 1.5 = 7.8cm

Stone Fill c Outlet

6m x 2m x 1.13m =

13.6cm

92.2cm

(1m x 1.4m x 1.8m) Minus Trench Rock - 2.5cm

89.7cm

Granular Backfill for Structures

Ex. Live Culvert - New Culvert

$\left[\left(\frac{0.1+0.4}{2} \times 15\right) + \left(21.4 \times .88\right)\right] \times 1.88m$ = 42.4cm

Earth Borrow

Existing Roadway Width & Height

10m (ave width) x 0.85m (ave depth) x 1.88m = 16.0cm x 1.15 = 18.4cm

WEF JWS
12 18 06 1-23-7

T. Bc 2A, Pg 114

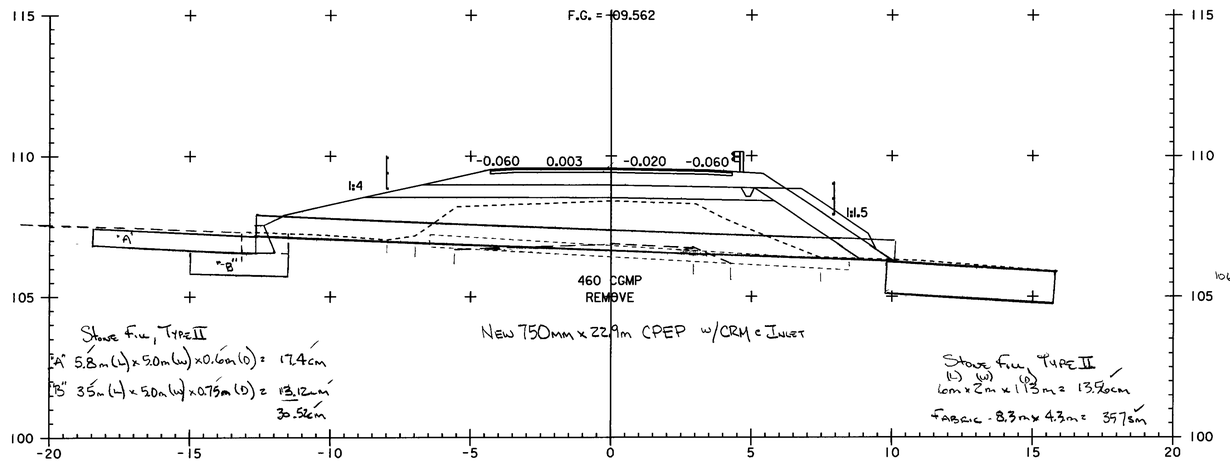

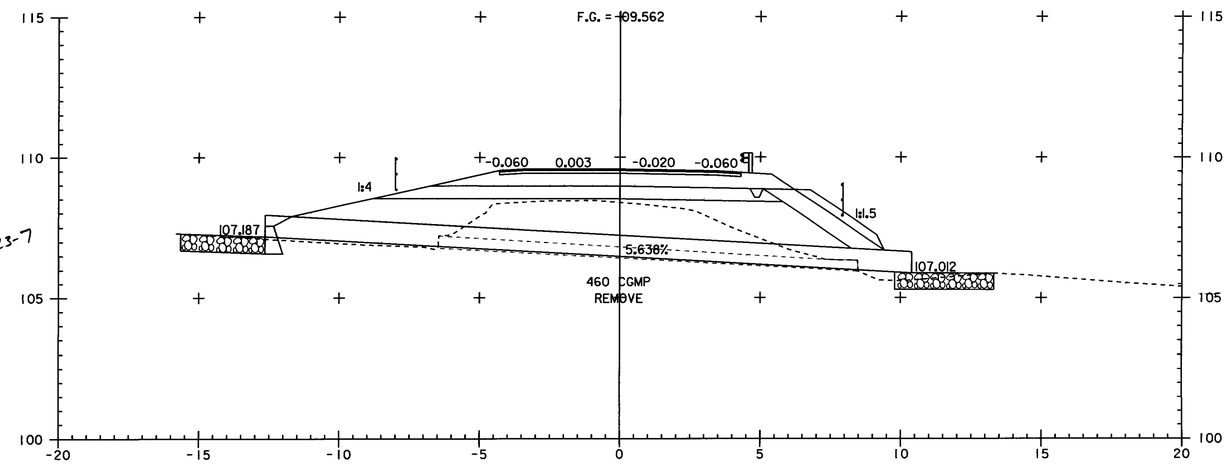

DRAINAGE SHEET # 31
4/88 - Drainage

Structure Excavation

Station	Dist	Area sm	Vol cm
119+988.5		0	
	1.4		10.4
+989.9		14.8	
	0.9		14.8
+990.8		18.2	
	2.4		34.1
+993.2		10.2	
	1.6		10.5
+994.8		8.4	
	5.2		49.4
120+000.0		10.6	
	5.84		54.9
+005.84		8.2	
		14.3	
+005.84	2.4		36.1
+008.24		15.8	
	0.9		13.1
+009.14		13.3	
	1.4		9.3
+010.54		0	
			232.6cm

Unclassified Channel Excavation

119+986.5		3.1	
	2.0		6.2
-988.5		3.1	
	1.4		3.7
+989.9		2.2	
120+009.14		1.4	
	1.4		2.5
+010.54		2.2	
			12.4cm

Granular Backfill for Structures

Headwall - Sheet # 235			35.6
119+993.20		13.2	
	1.6		19.0
+994.8		10.5	
	5.2		51.2
120+000.0		9.2	
	5.84		51.7
+005.84		8.5	
Headwall			35.6
			193.1 cm

Stone Fill, Type II and Geotextile under Stone Fill

				Length (m)	
119+986.5		2.2	4.4	5.2	SM
	2.0				10.4
-988.5		2.2	3.8	5.2	
	1.4				7.3
+989.9		3.2	2.8	5.2	
	1.1				4.5
+991.0		1.8		3.0	
120+008.0		1.8	3.8	3.0	
	1.1				4.5
+009.14		3.2	3.6	5.2	
	1.4			4.4	6.7
+010.54		1.9			
			17.4cm		33.4sm

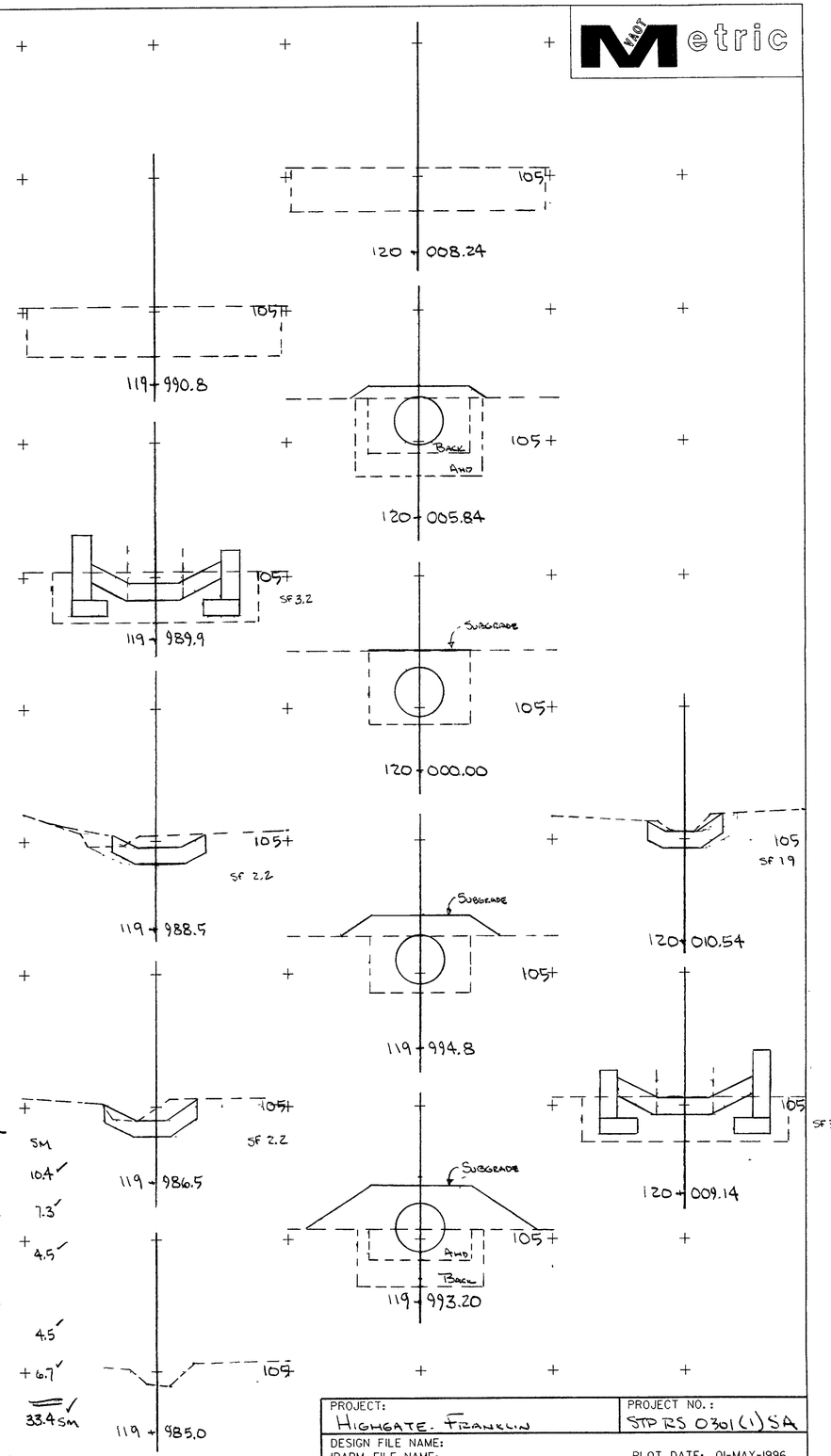

WRF 01-18-07
JWS 1-30-7

PROJECT: Highgate - Franklin	PROJECT NO.: STPRS 0301(1)SA
DESIGN FILE NAME:	
IPARM FILE NAME:	PLOT DATE: 01-MAY-1996
B-744.500 - Cross Section & Quantity	
	SHEET: 31-A OF

488A - Drainage

TRENCH EARTH

HEADWALL

2.95m(L) x 1.63m(W) x 0.75m(D) = 3.6cm ✓

CULVERT

$\left[\left(\frac{0.25+1.50}{2} \times 25.5\right) + \left(1.5 \times 11\right) + \left(\frac{1.5+14}{2} \times 4.4\right)\right] \times 1.88$ = 85.0cm ✓

(22.31, 16.50, 6.38)

CULVERT - OVER 1.5m

$\left[\left(\frac{0.0+0.2}{2} \times 2.2\right) + \left(\frac{0.2+0.0}{2} \times 8.8\right)\right] \times 1.88$ = 2.1cm x 1.5 = 3.2cm ✓

(.22, .88)

DI 0-1.5m

4.5m x 1.5 = 6.8cm ✓

DI OVER 1.5m

45cm x .45(LAYER D) = 2.0cm ✓

100.6cm ✓

GRANULAR BACKFILL FOR STRUCTURES

DI

3.0m x 1.8m(LAYER D) = 5.4cm ✓

CULVERT

3.4m x .88m(D) x 1.88(W) = 5.3cm ✓

+ 11.0m x $\left(\frac{0.2+0.88}{2}(D)\right)$ x 1.88(W) = 11.2cm ✓

66.9cm ✓

WRF 3W5 1-23-7

12-18-06

TBC 2A, PG 128

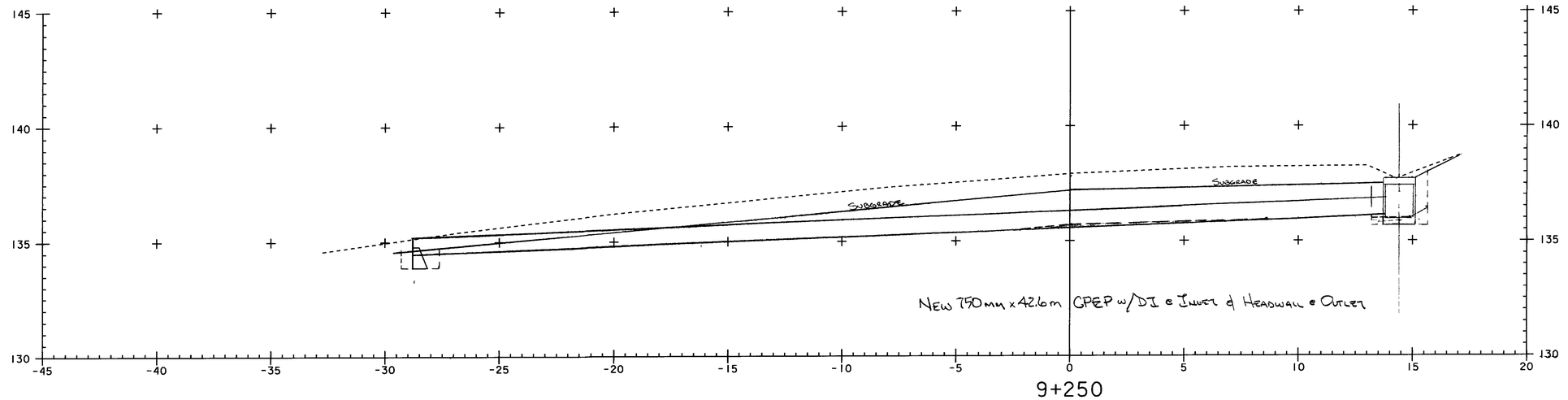

9+250
ASKEW = 30°53'21" LT
FIELD PROFILE

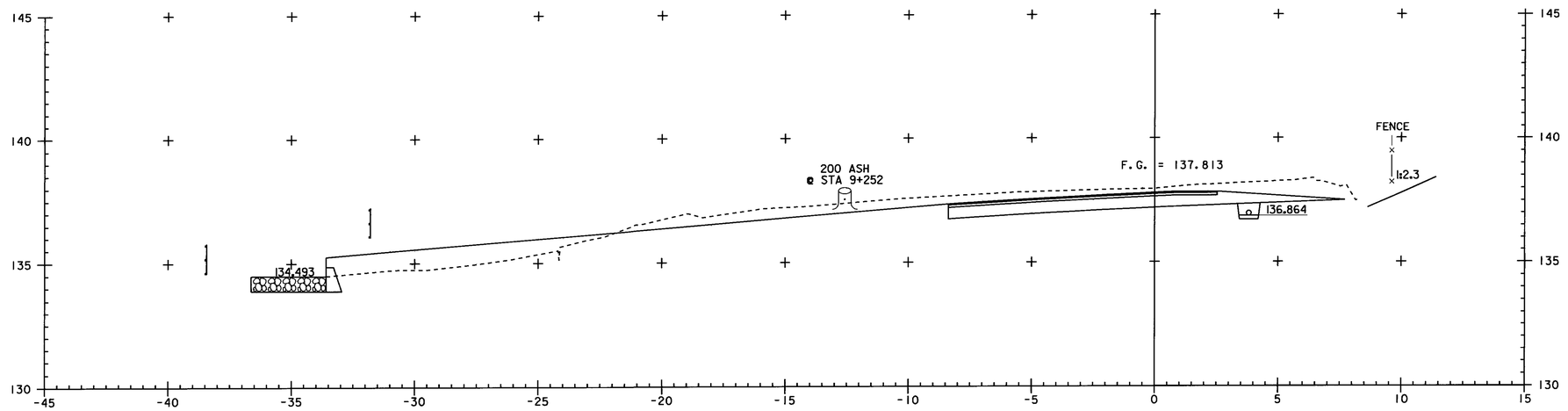

9+250
ASKEW = 30°53'21" LT
DESIGN SECTION

DRAINAGE SHEET # 32
489 - Drainage

TRENCH EARTH

DI

4.5m x 1.2m = 5.4cm

CULVERT

$\left[\left(\frac{0.9+1.15}{2}\times 3.6\right)+\left(\frac{1.15+1.95}{2}\times 77\right)\right]\times 155$ = 212cm

216.6cm

GRANULAR BACKFILL FOR STRUCTURES

DI

30sm x 1.4m = 4.2cm

CULVERT = 21.2cm

SAME AS EXCAVATION 25.4cm

WRF 12.19.06 JWS 1-23-7

To Bk 2A, Pg 132

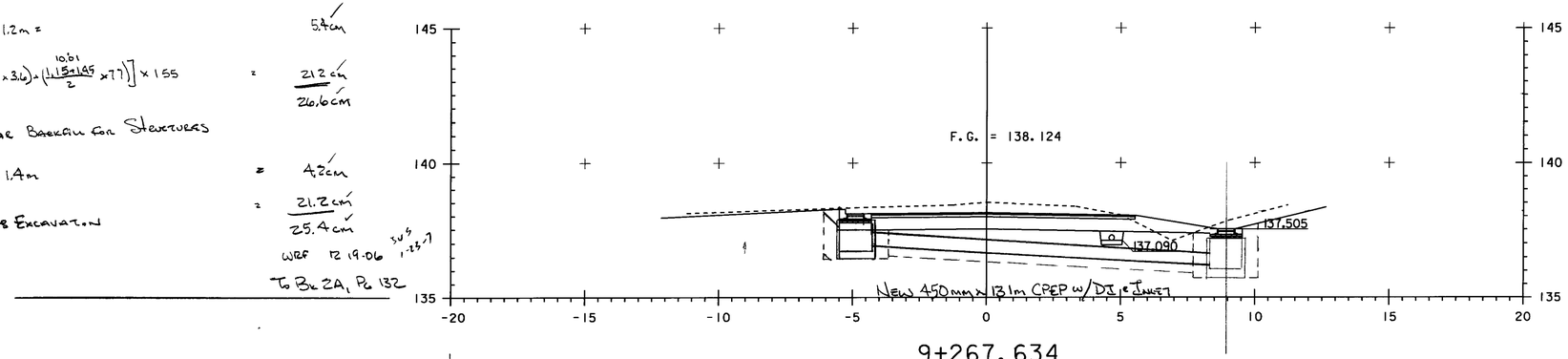

9+267.634
ASKEW = 90° 00' 00"
FIELD PROFILE

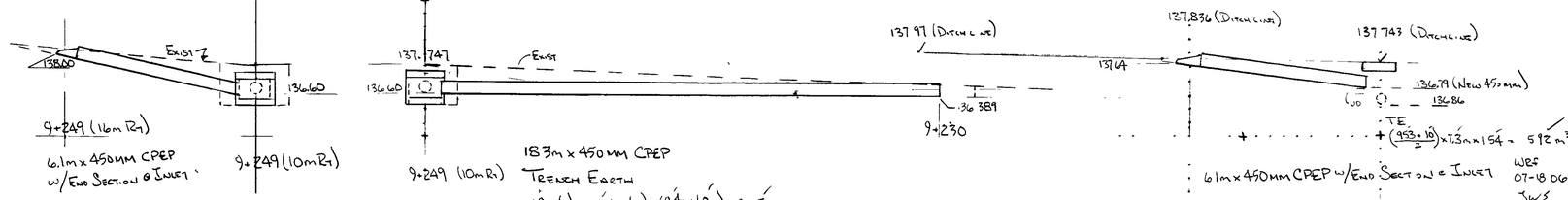

TRENCH EARTH DI (54") (1.37m) ROUND + 0.5m EXCAVATION OUTSIDE

AREA = $\frac{\pi D^2}{4} = \frac{\pi(2.37^2)}{4}$ = 4.415m x 1.45m(L) = 6.4cm

6.2cm

PIPE = 8m x 1.54m(W) x $\frac{0m+1m}{2}$ =

WRF 10.02.06

GRANULAR BACKFILL

DI

4.4m - $\frac{\pi(1.37)^2}{4}$ = 4.4sm - 1.5sm = 2.9sm x 1.2m = 3.5cm

PIPE = 6m(L) x 1.54m(W) x $\left(\frac{.5m+8m}{2}\right)$D = 60cm / 95cm

JWS 1-23-7

WRF 10-02-06

GRANULAR BACKFILL

18m x 1.54m(W) x $\left(\frac{8m+.5m}{2}\right)$D = 18.0cm

WRF 10.02.06

JWS 1-23-7

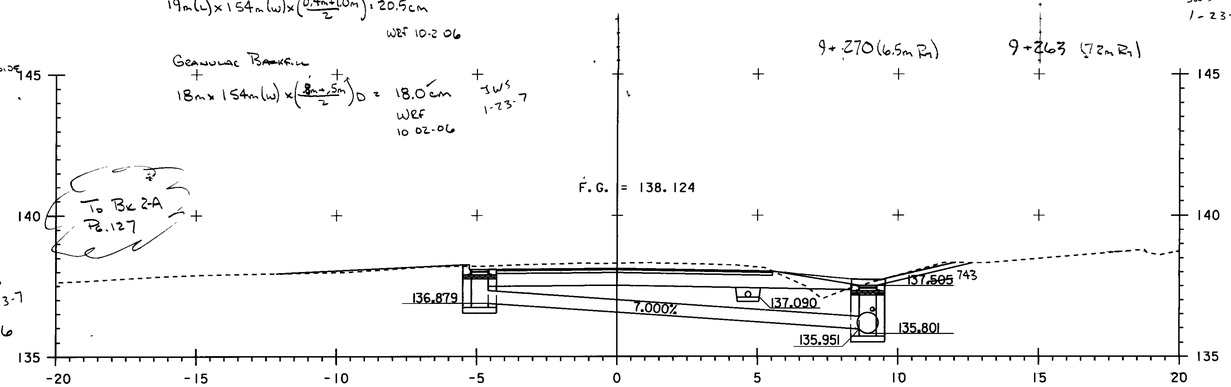

9+267.634
ASKEW = 90° 00' 00"
DESIGN SECTION

DRAINAGE SHEET # 77

490-Drainage

TRENCH EARTH

Shore Fill Exc.

Same as Shore Fill — 4.4cm

Culvert

$\left[\left(\frac{0.45+0.80}{2}\times 3.2\right)+\left(\frac{0.80+0.90}{2}\times 8.7\right)-\left(\frac{0.90+0.85}{2}\times 2.5\right)\right]\times 1.55m$ = 18.6cm

DI

4.5cm x 0.9m = 4.1cm

26.5cm

GRANULAR BACKFILL FOR STRUCTURES

Culvert

Same as Excavation — 18.0cm

DI

3.0cm x 0.9m = 2.7cm

20.7cm

WRF
12.19.06
T. BEZA
PL 138

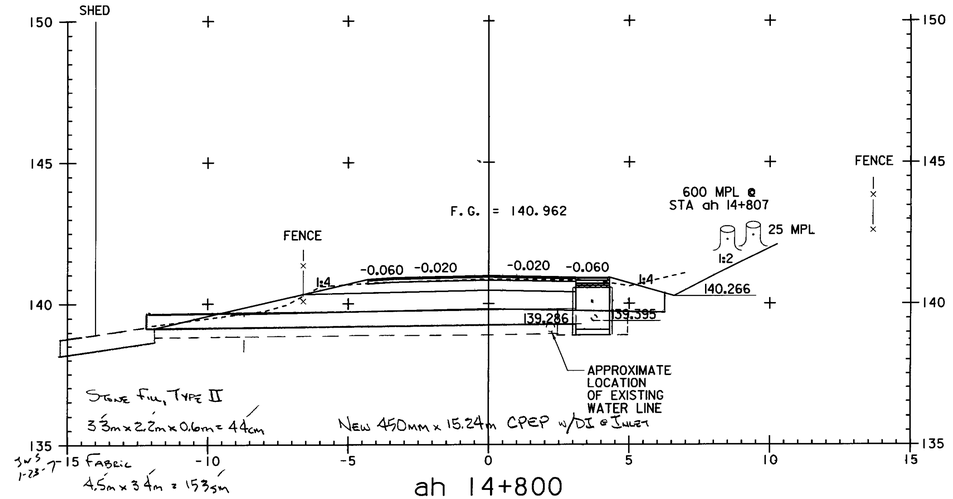

ah 14+800
ASKEW = 90° 00' 00"
FIELD PROFILE

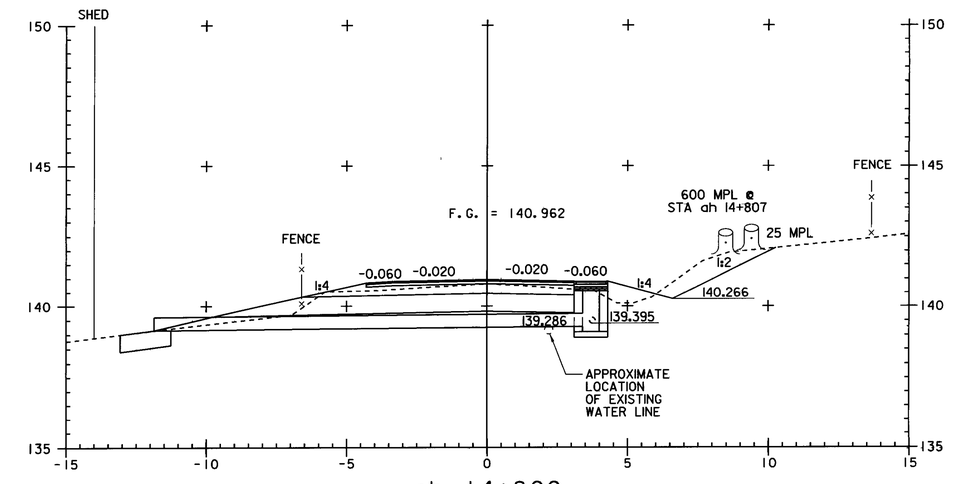

ah 14+800
ASKEW = 90° 00' 00"
DESIGN SECTION

Drainage Sheet # 3A
491-Drawings

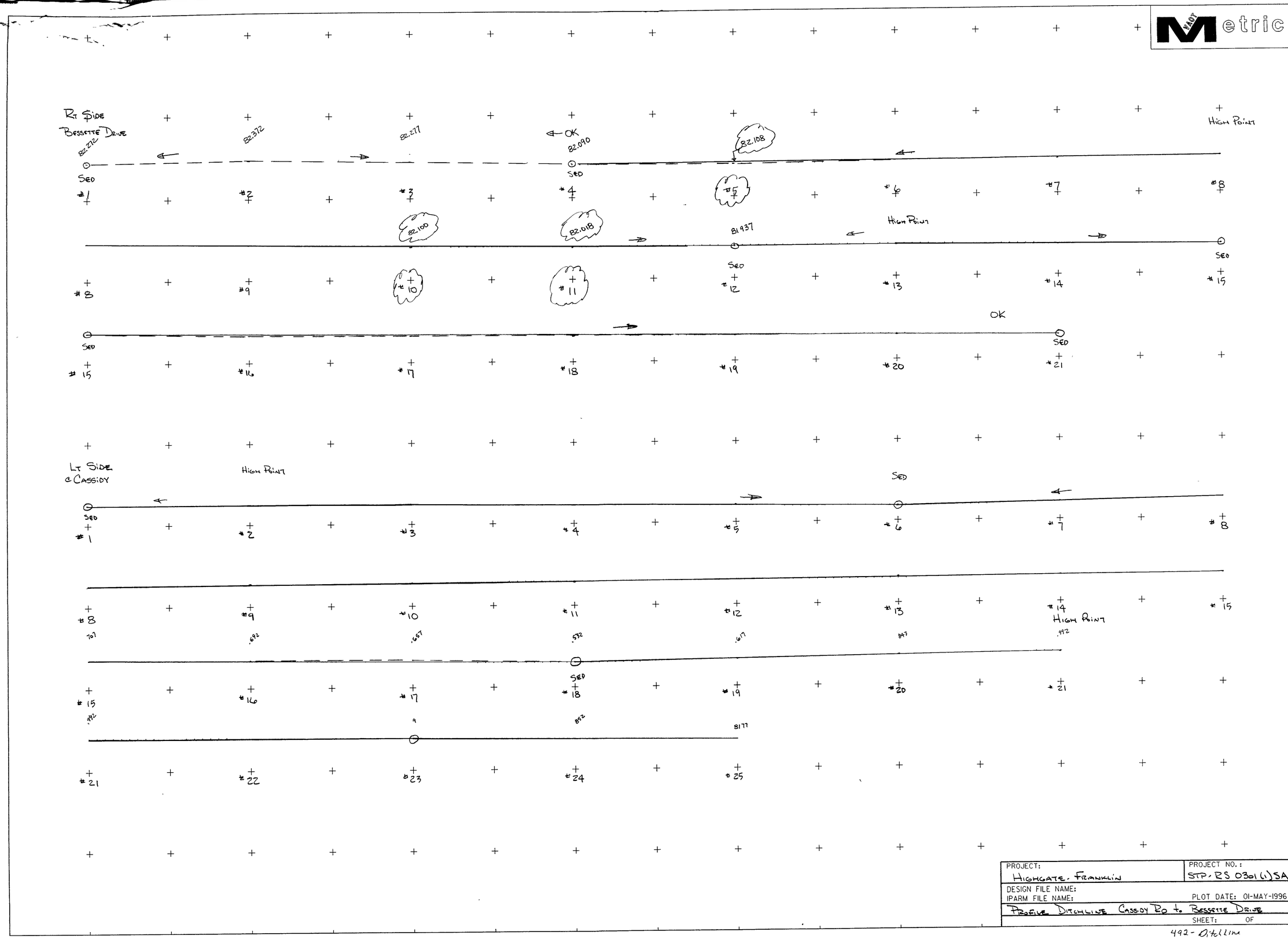

PROJECT: Highgate - Franklin	PROJECT NO.: STP-RS 0301(1)SA
DESIGN FILE NAME: IPARM FILE NAME:	PLOT DATE: 01-MAY-1996
Profile Ditchline Cassidy Rd to Bessette Drive	SHEET: OF

492 - Ditchline

STATE OF VERMONT
AGENCY OF TRANSPORTATION

EARTHWORKS

VAOT Metric

STATION km + m	DIST m	TOTAL EXCAVATION EARTH AND ROCK AREA m²	TOTAL EXCAVATION EARTH AND ROCK VOLUME m³	ROCK EXCAVATION AREA m²	ROCK EXCAVATION VOLUME m³	EMBANKMENT AREA m²	EMBANKMENT VOLUME m³		
HIGHGATE									
1+003.156		30.0							
	9.84		152.0						
+013		.9							
	7		3.2						
+020		0							
	15								
+035			10.0	0					
	5				0.5				
+040		1.0		.2					
	20		141.0		54.0				
+060		13.1		5.2					
	10		183.0		92.0				
+070		23.5		13.2					
	10		216.0		130.0				
+080		19.7		12.8					
	10				64.0				
+090			287.0	0					
	10								
+100		9.0							
	20		91.0						
+120		.1							
	20		1.0						
+140		0							
	20		0.0						
+160		0							
	20		9.0						
+180		.9							
	20		47.0						
+200		3.8							
	20		53.0						
+220		1.5							
	20		20.0						
+240		0.5							
	20		5.0						
+260		0							
	20		6.0						
+280		0.6							
	20		10.0						
+300		0.4							
	20		19.0						
+320		1.5							
	20		39.0						
+340		2.4							
	20		51.0						
+360		2.7							
	20		71.0						
+380		4.4							
	20		106.0						
+400		6.2							
	20		96.0						
+420		3.4							
	20		52.0						
+440		1.8							
	20		40.0						
+460		2.2							
	20		47.0						
+480		2.5							
	20		[illegible]						
+500		3.5							
			1815.2		340.6				

STATION km + m	DIST m	TOTAL EXCAVATION EARTH AND ROCK AREA m²	TOTAL EXCAVATION EARTH AND ROCK VOLUME m³	ROCK EXCAVATION AREA m²	ROCK EXCAVATION VOLUME m³	EMBANKMENT AREA m²	EMBANKMENT VOLUME m³		
1+500		3.5							
	20		83.0						
+520		4.8							
	20		86.0						
+540		3.8							
	20		49.0						
+560		0.4							
	20		10.0						
+580		0.6							
	20		10.0						
+600		0.4							
	20		6.0						
+620		0.2							
	20		56.0						
+640	14	5.4		.1	15.4				
+654	6		161.0	2.1	6.3				
+660	10	10.7		0					
+676	16		257.0	0					
	4				22.0				
1680		15.0		11.0					
	20		337.0		222.0				
+700	10	18.7		11.2	56.0				
+710	10		265.0	0					
+720		6.8							
	20		74.0						
+740		0.6							
	20		12.0						
+760		0.6							
	20		14.0						
+780		0.8							
	20		69.0						
+800		5.5							
	20		136.0						
+820		8.1							
	20		99.0						
+840		1.8							
	20		22.0						
+860		0.4							
	20		111.0						
+880		10.7							
	20		311.0						
+900		20.4							
	20		458.0						
+920		25.4							
	20		489.0						
+940		23.5							
	20		449.0						
+960		20.8							
	20		365.0						
+980		15.7							
	20		228.0						
2+000		7.1							
			4128.0		321.7				

STATION km + m	DIST m	TOTAL EXCAVATION EARTH AND ROCK AREA m²	TOTAL EXCAVATION EARTH AND ROCK VOLUME m³	ROCK EXCAVATION AREA m²	ROCK EXCAVATION VOLUME m³	EMBANKMENT AREA m²	EMBANKMENT VOLUME m³		
2+000		7.1							
	20		71.0						
+020		0							
	20		0.0						
+040		0							
	20		56.0						
+060		5.6							
	20		146.0						
+080		9.0							
	20		177.0						
+100		8.7							
	20		158.0						
+120		7.1							
	20		128.0						
+140		5.7							
	20		75.0						
+160		1.8							
	20		22.0						
+180		.4							
	20		18.0						
+200		.8							
	20		26.0						
+220		1.8							
	20		22.0						
+240		0.4							
	20		4.0						
+260		.0							
	20		68.0						
+280		6.8							
	20		200.0						
+300		13.2							
	20		195.0						
+320		16.3							
	20		290.0						
+340		12.7							
	20		272.0						
+360		14.5							
	20		304.0						
+380		15.9							
	20		287.0						
+400		12.8							
	20		144.0						
+420		1.6							
	20		29.0						
+440		.7							
	20		11.0						
+460		.4							
	20		12.0						
+480		.8							
	20		13.0						
+500		.5							
			2816.0		0.0				

SUMMARY AND BALANCES

STATION TO STATION km + m	km + m	TOTAL EXC. EARTH+ROCK m³	ROCK EXCAVATION m³	EMBANKMENT m³	EXCESSES CUT	EXCESSES FILL	ACCUMULATIVE EXCESSES CUT	ACCUMULATIVE EXCESSES FILL
1+000	1+500	1815.2	340.5					
1+500	2+000	4128.0	321.7					
2+000	2+500	2816.0	0					
2+500	3+000	2909.0	0					
3+000	3+500	3107.0	0					
3+500	4+000	1646.0	0					
4+000	4+500	3007.0	1213.1					
4+500	5+000	2330.0	0					
5+000	5+500	3028.0	119.4					
5+500	6+000	2871.0	756.7					
6+000	6+500	1668.0	209.9					
6+500	7+000	3205.0	210.0					
7+000	7+500	2387.0	0					
7+500	8+000	4854.0	0					
8+000	8+500	3230.9	0					
8+500	9+000	3563.0	0					
9+000	14+840	5070.4	0					
14+840	15+034	1657.3	0					
Stone Fill Not Shown	Ditches on K-Sec	472.7						
Permanent Sediment Trap		224.4						
Total Mainline		54589.9	3171.3					
Common Earth		51,418.4						
To Bk 1, Pg 34								

→ T. Bk 1, Pg 38

Bk 4 02-21-07

WRF 02-15 07

REMARKS

EARTH AND ROCK EXCAVATION
SOLID ROCK EXCAVATION
EARTH EXCAVATION

PLANIMETERED FILL
LESS FACTORED SOLID ROCK
LESS DISPLACEMENT OF ANY LARGE STRUCTURES
NET PLANIMETERED FILL
FACTOR
PLANIMETERED FILL INCLUDING FACTOR

MATERIALS AVAILABLE FOR FILLS
EARTH EXCAVATION
CHANNEL EXCAVATION
UNDERDRAIN EXCAVATION
STRUCTURE EXCAVATION

TOTAL MATERIAL AVAILABLE FOR FILL

TOTAL FILL INCLUDING FACTOR
TOTAL MATERIAL FOR FILL
BORROW
EXCESS EXCAVATION

/WRF 02-13 07

EAR 8759.2
R 662.2

PROJECT NAME :	PROJECT NO. :
HIGHGATE - FRANKLIN	STPRS 0301(1)SA

DESIGN FILE NAME:
IPARM FILE NAME:
SURVEYED BY:
SQUAD LEADER:

PLOT DATE: 26-DEC-2006
SURVEY DATE:
DRAWN BY:
SHEET: 1 OF 7

493 - Earthwork

STATE OF VERMONT
AGENCY OF TRANSPORTATION

EARTHWORKS

VAOT Metric

STATION km + m	DIST m	TOTAL EXCAVATION EARTH AND ROCK AREA m²	TOTAL EXCAVATION EARTH AND ROCK VOLUME m³	ROCK EXCAVATION AREA m²	ROCK EXCAVATION VOLUME m³	EMBANKMENT AREA m²	EMBANKMENT VOLUME m³	AREA m²	VOLUME m³
2+500		.5							
	20		9.0						
+520		.4							
	20		44.0						
+540		4.0							
	20		180.0						
+560		14.0							
	20		294.0						
+580		15.4							
	20		187.0						
+600		3.3							
	20		37.0						
+620		.4							
	20		12.0						
+640		.8							
	20		8.0						
+660		0							
	20		00						
+680		0							
	20		10						
+700		.1							
	20		42.0						
+720		4.1							
	20		100.0						
+740		5.9							
	20		104.0						
+760		4.5							
	20		83.0						
+780		3.8							
	20		64.0						
+800		2.6							
	20		26.0						
+820		0							
	20		0.0						
+840		0							
	20		0.0						
+860		0							
	20		51.0						
+880		5.1							
	20		179.0						
+900		12.8							
	20		245.0						
+920		11.7							
	20		249.0						
+940		13.0							
	20		277.0						
+960		14.7							
	20		329.0						
+980		18.2							
	20		390.0						
3+000		20.8							
			2909.0						

STATION km + m	DIST m	TOTAL EXCAVATION EARTH AND ROCK AREA m²	TOTAL EXCAVATION EARTH AND ROCK VOLUME m³	ROCK EXCAVATION AREA m²	ROCK EXCAVATION VOLUME m³	EMBANKMENT AREA m²	EMBANKMENT VOLUME m³	AREA m²	VOLUME m³
3+000		20.8							
	20		409.0						
+020		20.1							
	20		394.0						
+040		12.3							
	20		214.0						
+060		9.1							
	20		98.0						
+080		.7							
	20		13.0						
+100		.6							
	20		12.0						
+120		.6							
	20		14.0						
+140		.8							
	20		16.0						
+160		.8							
	20		41.0						
+180		3.3							
	20		119.0						
+200		8.6							
	20		189.0						
+220		10.3							
	20		193.0						
+240		9.0							
	20		166.0						
+260		7.6							
	20		124.0						
+280		4.8							
	20		72.0						
+300		2.4							
	20		24.0						
+320		0							
	20		0.0						
+340		0							
	20		0.0						
+360		0							
	20		58.0						
+380		5.8							
	20		160.0						
+400		10.2							
	20		250.0						
+420		14.8							
	20		310.0						
+440		17.0							
	20		345.0						
+460		17.5							
	20		313.0						
+480		13.8							
	20		235.0						
+500		9.7							
			3107.0						

STATION km + m	DIST m	TOTAL EXCAVATION EARTH AND ROCK AREA m²	TOTAL EXCAVATION EARTH AND ROCK VOLUME m³	ROCK EXCAVATION AREA m²	ROCK EXCAVATION VOLUME m³	EMBANKMENT AREA m²	EMBANKMENT VOLUME m³	AREA m²	VOLUME m³
3+500		9.7							
	20		169.0						
+520		7.2							
	20		169.0						
+540		9.0							
	20		196.0						
+560		6.6							
	20		67.0						
+580		.1							
	20		9.0						
+600		.8							
	20		16.0						
+620		.8							
	20		14.0						
+640		.6							
	20		11.0						
+660		.5							
	20		9.0						
+680		.4							
	20		4.0						
+700		0							
	20		0.0						
+720		0							
	20		13.0						
+740		1.3							
	20		59.0						
+760		4.6							
	20		118.0						
+780		7.2							
	20		132.0						
+800		6.0							
	20		104.0						
+820		4.4							
	20		81.0						
+840		3.7							
	20		64.0						
+860		2.7							
	20		31.0						
+880		.4							
	20		12.0						
+900		.8							
	20		40.0						
+920		3.2							
	20		58.0						
+940		2.6							
	20		73.0						
+960		4.7							
	20		105.0						
+980		5.8							
	20		139.0						
4+000		8.1							
			1646.0						

SUMMARY AND BALANCES

STATION TO STATION km + m	STATION TO STATION km + m	TOTAL EXC. EARTH+ROCK m³	ROCK EXCAVATION m³	EMBANKMENT m³	EXCESSES CUT	EXCESSES FILL	ACCUMULATIVE EXCESSES CUT	ACCUMULATIVE EXCESSES FILL
TOWN HIGHWAYS								
TH32 20+004.3	20+040	47.0	0					
TH24 21+005.6	21+060	448.8	282.6					
TH15 22+005.6	22+077	635.5	302.0					
TH25 23+010	23+056	78.0	0					
TH37 24+006.3	24+046	225.2	0					
TH21 25+006.3	25+058	286.8	0					
DRIVES								
1+085.47	15+024.47	1261.2	0					
			584.6					
SHEET TOTAL EARTH 2,482.5								
TO BK 1, PG. 34								
		57512.4	37556.9					
TOTAL EARTH - 53816.5							WRF 02-15-07	

SHEET TOTAL ROCK T. BK 1 PG. 38

BK 11 02-21-07

REMARKS

EARTH AND ROCK EXCAVATION	
SOLID ROCK EXCAVATION	
EARTH EXCAVATION	
PLANIMETERED FILL	
LESS FACTORED SOLID ROCK	
LESS DISPLACEMENT OF ANY LARGE STRUCTURES	
NET PLANIMETERED FILL	
FACTOR	
PLANIMETERED FILL INCLUDING FACTOR	
MATERIALS AVAILABLE FOR FILLS	
EARTH EXCAVATION	
CHANNEL EXCAVATION	
UNDERDRAIN EXCAVATION	
STRUCTURE EXCAVATION	
TOTAL MATERIAL AVAILABLE FOR FILL	
TOTAL FILL INCLUDING FACTOR	
TOTAL MATERIAL FOR FILL	
BORROW	
EXCESS EXCAVATION	

VAOT 07-11

EER 8862.0

R 0.0

PROJECT NAME : HIGHGATE - FRANKLIN

PROJECT NO. : STP-RS 0301(1) SA

DESIGN FILE NAME:
IPARM FILE NAME:
SURVEYED BY:
SQUAD LEADER:

PLOT DATE: 26-DEC-2006
SURVEY DATE:
DRAWN BY:
SHEET: 2 OF 7

494- Earthworks

STATE OF VERMONT
AGENCY OF TRANSPORTATION

EARTHWORKS

VAOT Metric

STATION km + m	DIST m	TOTAL EXCAVATION EARTH AND ROCK AREA m²	TOTAL EXCAVATION EARTH AND ROCK VOLUME m³	ROCK EXCAVATION AREA m²	ROCK EXCAVATION VOLUME m³	EMBANKMENT AREA m²	EMBANKMENT VOLUME m³	AREA m²	VOLUME m³
4+000		8.1							
	20		151.0						
+020		7.0							
	20		129.0						
+040		5.9							
	20		99.0						
+060		4.0							
	20		88.0						
+080		4.8							
	20		88.0						
+100		4.0							
	20		60.0						
+120		2.0							
	20		20.0						
+140		0							
	20		0.0						
+160		0							
	20		0.0						
+180		0							
	20		0.0						
+200		0							
	20		0.0						
+220		0							
	19								
+239			32.0	0					
	1				1.1				
+240		3.2		2.2					
	20		155.0		97.0				
+260		12.3		7.5					
	20		231.0		116.0				
+280		10.8		4.1					
	20		188.0		72.0				
+300		8.0		3.1					
	20		160.0		74.0				
+320		8.0		4.3					
	20		168.0		108.0				
+340		8.8		6.5					
	20		187.0		136.0				
+360		9.9		7.1					
	20		221.0		150.0				
+380		12.2		7.9					
	20		271.0		177.0				
+400		14.9		9.8					
FRANKLIN	20		289.0		111.0				
+420		14.0		1.3					
	20		265.0		83.0				
+440		12.5		7.0					
	20		159.0		86.0				
+460		3.4		1.5					
	4				9.0				
+464			40.0	0					
	16								
+480		.6							
	20		6.0						
+500		0							
			3007.0		1213.1				

STATION km + m	DIST m	TOTAL EXCAVATION EARTH AND ROCK AREA m²	TOTAL EXCAVATION EARTH AND ROCK VOLUME m³	ROCK EXCAVATION AREA m²	ROCK EXCAVATION VOLUME m³	EMBANKMENT AREA m²	EMBANKMENT VOLUME m³	AREA m²	VOLUME m³
4+500		0							
	20		0.0						
+520		0							
	20		0.0						
+540		0							
	20		4.0						
+560		.4							
	20		10.0						
+580		.6							
	20		13.0						
+600		1.7							
	20		55.0						
+620		3.8							
	20		40.0						
+640		.2							
	20		2.0						
+660		0							
	20		0.0						
+680		0							
	20		0.0						
+700		0							
	20		41.0						
+720		4.1							
	20		82.0						
+740		4.2							
	20		50.0						
+760		.8							
	20		8.0						
+780		0							
	20		0.0						
+800		0							
	20		16.0						
+820		1.5							
	20		47.0						
+840		3.2							
	20		68.0						
+860		3.6							
	20		74.0						
+880		3.8							
	20		128.0						
+900		9.0							
	20		235.0						
+920		14.5							
	20		348.0						
+940		20.3							
	20		414.0						
+960		21.1							
	20		423.0						
+980		21.2							
	20		262.0						
5+000		5.0							
			2330.0		0.0				

STATION km + m	DIST m	TOTAL EXCAVATION EARTH AND ROCK AREA m²	TOTAL EXCAVATION EARTH AND ROCK VOLUME m³	ROCK EXCAVATION AREA m²	ROCK EXCAVATION VOLUME m³	EMBANKMENT AREA m²	EMBANKMENT VOLUME m³	AREA m²	VOLUME m³
5+000		5.0							
	20		59.0						
+020		.9							
	20		13.0						
+040		.4							
	20		30.0						
+060		2.6							
	20		239.0						
+080		21.3							
	20		429.0						
+100		21.6							
	20		333.0						
+120		11.7							
	20		121.0						
+140 Bk		0.4							
+140 Ahd		2.6							
-	20		99.0						
+160		2.3							
	20		76.0						
+180		5.3							
	20		131.0						
+200		7.8							
	20		171.0						
+220		9.3							
	16		160.0						
+236 Bk		10.7							
+236 Ahd		7.5							
	4		30.0						
+240		7.5							
	20		159.0						
+260		8.4							
	20		159.0						
+280 Bk		7.5							
+280 Ahd		4.4							
	20		65.0						
+300		2.1							
	20		61.0						
+320		4.0							
	18		72.0						
+338 Bk		4.0							
+338 Ahd		6.0							
	2		12.0						
+340		6.0							
	20		118.0						
+360		5.8							
	20		98.0						
+380 Bk		4.0							
+380 Ahd		2.0							
	20		38.0						
+400		1.8							
	20		51.0						
+420		3.3							
	20		53.0						
+440	19	2.0							
+459	1		65.0	0	1.4				
+460		4.5		2.8					
	20		87.0		33.0				
+480		4.2		.5					
	20		149.0		85.0				
+500		10.7		8.0					
			3028.0		119.4				

EER 8521.0'

R 1332.5'

SUMMARY AND BALANCES

STATION TO STATION km + m	km + m	TOTAL EXC. EARTH+ROCK m³	ROCK EXCAVATION m³	EMBANKMENT m³	EXCESSES CUT	EXCESSES FILL	ACCUMULATIVE EXCESSES CUT	ACCUMULATIVE EXCESSES FILL

REMARKS

EARTH AND ROCK EXCAVATION	
SOLID ROCK EXCAVATION	
EARTH EXCAVATION	
PLANIMETERED FILL	
LESS FACTORED SOLID ROCK	
LESS DISPLACEMENT OF ANY LARGE STRUCTURES	
NET PLANIMETERED FILL	
FACTOR	
PLANIMETERED FILL INCLUDING FACTOR	
MATERIALS AVAILABLE FOR FILLS	
EARTH EXCAVATION	
CHANNEL EXCAVATION	
UNDERDRAIN EXCAVATION	
STRUCTURE EXCAVATION	
TOTAL MATERIAL AVAILABLE FOR FILL	
TOTAL FILL INCLUDING FACTOR	
TOTAL MATERIAL FOR FILL	
BORROW	
EXCESS EXCAVATION	

PROJECT NAME : HIGHGATE - FRANKLIN

PROJECT NO. : STP RS0301(1)SA

DESIGN FILE NAME:
IPARM FILE NAME:
SURVEYED BY:
SQUAD LEADER:

PLOT DATE: 26-DEC-2006
SURVEY DATE:
DRAWN BY:
SHEET: 3 OF 7

STATE OF VERMONT
AGENCY OF TRANSPORTATION

EARTHWORKS

VAOT Metric

STATION km + m	DIST m	TOTAL EXCAVATION EARTH AND ROCK AREA m²	TOTAL EXCAVATION EARTH AND ROCK VOLUME m³	ROCK EXCAVATION AREA m²	ROCK EXCAVATION VOLUME m³	EMBANKMENT AREA m²	EMBANKMENT VOLUME m³	AREA m²	VOLUME m³
5+500		10.7		8.0					
	20		224.0		161.0				
+520		11.7		8.1					
	20		308.0		252.0				
+540		19.1		17.1					
	20		333.0		288.0				
+560		14.2		5.7					
	3				8.10				
+563			192.0	0					
	17								
+580		5.0							
	20		50.0						
+600		0							
	20		0.0						
+620		0							
	20		0.0						
+640		0							
	20		0.0						
+660		0							
	20		0.0						
+680		0							
	20		0.0						
+700		0							
	20		0.0						
+720		0							
	20		105.0						
+740		10.5							
	20		233.0						
+760		12.8							
	20		298.0						
+780		17.0							
	12								
+792			361.0	0					
	8				55.6				
+800		19.1		13.9					
	5				34.8				
+805			253.0	0					
	15								
+820		6.2							
	20		87.0						
+840		2.5							
	20		32.0						
+860		.7							
	20		19.0						
+880		1.2							
	20		20.0						
+900		.8							
	20		14.0						
+920		.6							
	20		18.0						
+940		2.2							
	10								
+950	3			0	2.1				
+953	3		61.0	1.4	2.1				
+956	4			0					
+960		3.9							
			101.0						
+980	15	6.2							
+995	5		152.0	0	12.5				
6+000		9.0		5.0					
			2871.0		756.7				

STATION km + m	DIST m	TOTAL EXCAVATION EARTH AND ROCK AREA m²	TOTAL EXCAVATION EARTH AND ROCK VOLUME m³	ROCK EXCAVATION AREA m²	ROCK EXCAVATION VOLUME m³	EMBANKMENT AREA m²	EMBANKMENT VOLUME m³	AREA m²	VOLUME m³
6+000		9.0		5.0					
	20		196.0		118.0				
+020	10	10.6		6.8	34.0				
+030	10		114.0	0					
+040		.8							
	20		8.0						
+060		0							
	20		0.0						
+080		0							
	20		0.0						
+100		0							
	20		13.0						
+120		1.3							
	20		33.0						
+140		2.0							
	20		32.0						
+160		1.2							
	20		12.0						
+180		0							
	20		0.0						
+200		0							
	20		66.0						
+220		6.6							
	20		183.0						
+240	2	11.7		0					
+242	2			4.4	4.4				
+244	2		239.0	4.4					
+246	14			0					
+260		12.2							
	20		197.0						
+280		7.5							
	20		86.0						
+300		1.1							
	20		11.0						
+320		0							
	20		0.0						
+340		0							
	20		3.0						
+360	10	.3							
+370	5		60.0	0	7.8				
+375	5			3.1	15.5				
+380	3	57		3	4.6				
+383	17		94.0	0					
+400		3.7							
	20		69.0						
+420	11	3.2							
+431	4		121.0	0	9.4				
+435	5			4.7	11.8				
+440		8.9		0					
	20		105.0						
+460		1.6							
	20		16.0						
+480		0							
	20		10.0						
+500		1.0							
			1668.0		209.9				

STATION km + m	DIST m	TOTAL EXCAVATION EARTH AND ROCK AREA m²	TOTAL EXCAVATION EARTH AND ROCK VOLUME m³	ROCK EXCAVATION AREA m²	ROCK EXCAVATION VOLUME m³	EMBANKMENT AREA m²	EMBANKMENT VOLUME m³	AREA m²	VOLUME m³
6+500		1.0							
	20		38.0						
+520		2.8							
	20		78.0						
+540		5.0							
	20		90.0						
+560		4.0							
	20		172.0						
+580		13.2							
	20		219.0						
+600		8.7							
	20		133.0						
+620		4.6							
	20		67.0						
+640		2.1							
	20		46.0						
+660		2.4							
	20		67.0						
+680		4.3							
	20		110.0						
+700		6.7							
	20		141.0						
+720		7.4		0					
	20		146.0		10.0				
+740		7.2		1.0					
	20		150.0		13.0				
+760		7.8		0.3					
	20		199.0		41.0				
+780		12.1		3.8					
	20		221.0		66.0				
+800		10.0		2.8					
	20		192.0		54.0				
+820		9.2		2.6					
	20		226.0		26.0				
+840		13.4		0					
	20		256.0						
+860		12.2							
	20		237.0						
+880		11.5							
	20		169.0						
+900		4.8							
	20		98.0						
+920		5.0							
	20		77.0						
+940		2.7							
	20		32.0						
+960		.5							
	20		11.0						
+980		.6							
			37.0						
7+000		3.1							
			3205.0		210.0				

SUMMARY AND BALANCES

STATION TO STATION Km + m	Km + m	TOTAL EXC. EARTH+ROCK m³	ROCK EXCAVATION m³	EMBANKMENT m³	EXCESSES CUT	EXCESSES FILL	ACCUMULATIVE EXCESSES CUT	ACCUMULATIVE EXCESSES FILL

REMARKS

EARTH AND ROCK EXCAVATION	
SOLID ROCK EXCAVATION	
EARTH EXCAVATION	
PLANIMETERED FILL	
LESS FACTORED SOLID ROCK	
LESS DISPLACEMENT OF ANY LARGE STRUCTURES	
NET PLANIMETERED FILL	
FACTOR	
PLANIMETERED FILL INCLUDING FACTOR	
MATERIALS AVAILABLE FOR FILLS	
EARTH EXCAVATION	
CHANNEL EXCAVATION	
UNDERDRAIN EXCAVATION	
STRUCTURE EXCAVATION	
TOTAL MATERIAL AVAILABLE FOR FILL	
TOTAL FILL INCLUDING FACTOR	
TOTAL MATERIAL FOR FILL	
BORROW	
EXCESS EXCAVATION	

✓WRF
02-13 07

EER 7744.0
R 1176.6

PROJECT NAME : HIGHGATE - FRANKLIN

PROJECT NO. : STP-RS 0301(1)SA

DESIGN FILE NAME:
IPARM FILE NAME:
SURVEYED BY:
SQUAD LEADER:

PLOT DATE: 26-DEC-2006
SURVEY DATE:
DRAWN BY:
SHEET: 4 OF 7

STATE OF VERMONT
AGENCY OF TRANSPORTATION

EARTHWORKS

VAOT Metric

STATION km + m	DIST m	TOTAL EXCAVATION EARTH AND ROCK AREA m²	TOTAL EXCAVATION EARTH AND ROCK VOLUME m³	ROCK EXCAVATION AREA m²	ROCK EXCAVATION VOLUME m³	EMBANKMENT AREA m²	EMBANKMENT VOLUME m³	AREA m²	VOLUME m³
7+000		3.1							
	20		93.0						
+020		6.2							
	20		103.0						
+040		4.1							
	20		80.0						
+060		3.9							
	20		93.0						
+080		1.4							
	20		35.0						
+100		2.1							
	20		45.0						
+120 Bk		2.4							
+120 Ahd		4.0							
	20		84.0						
+140		4.4							
	20		115.0						
+160		7.1							
	20		168.0						
+180		9.7							
	20		295.0						
+200		19.8							
	20		294.0						
+220		9.6							
	20		144.0						
+240		4.8							
	20		52.0						
+260		.4							
	20		8.0						
+280		.4							
	20		8.0						
+300		.4							
	20		8.0						
+320		.4							
	20		8.0						
+340		.4							
	20		4.0						
+360		0							
	20		56.0						
+380		5.6							
	20		142.0						
+400		8.6							
	20		163.0						
+420		7.7							
	20		136.0						
+440		5.9							
	20		113.0						
+460		5.4							
	20		94.0						
+480		4.0							
	20		86.0						
+500		4.6							
			2387.0		0.0				

STATION km + m	DIST m	TOTAL EXCAVATION EARTH AND ROCK AREA m²	TOTAL EXCAVATION EARTH AND ROCK VOLUME m³	ROCK EXCAVATION AREA m²	ROCK EXCAVATION VOLUME m³	EMBANKMENT AREA m²	EMBANKMENT VOLUME m³	AREA m²	VOLUME m³
7+500		4.6							
	20		99.0						
+520		5.3							
	20		160.0						
+540		10.7							
	20		204.0						
+560		9.7							
	20		182.0						
+580		8.5							
	20		227.0						
+600		14.2							
	20		260.0						
+620		11.8							
	20		235.0						
+640		11.7							
	20		237.0						
+660		12.0							
	20		240.0						
+680		12.0							
	20		237.0						
+700		11.7							
	20		249.0						
+720		13.2							
	20		280.0						
+740		14.8							
	20		302.0						
+760		15.4							
	20		298.0						
+780		8.4							
	20		169.0						
+800		8.5							
	20		117.0						
+820		3.2							
	20		69.0						
+840		3.7							
	20		105.0						
+860		6.8							
	20		150.0						
+880		8.2							
	20		145.0						
+900		6.3							
	20		90.0						
+920		2.7							
	20		61.0						
+940		3.4							
	20		158.0						
+960		12.4							
	20		286.0						
+980		16.2							
	20		354.0						
8+000		19.2							
			4854.0		0.0				

STATION km + m	DIST m	TOTAL EXCAVATION EARTH AND ROCK AREA m²	TOTAL EXCAVATION EARTH AND ROCK VOLUME m³	ROCK EXCAVATION AREA m²	ROCK EXCAVATION VOLUME m³	EMBANKMENT AREA m²	EMBANKMENT VOLUME m³	AREA m²	VOLUME m³
8+000		19.2							
	20		328.0						
+020		13.6							
	20		180.0						
+040		4.4							
	20		98.0						
+060		4.8							
	20		95.0						
+080		4.7							
	20		79.0						
+100		3.2							
	20		80.0						
+120		4.8							
	20		102.0						
+140		5.4							
	20		107.0						
+160		5.3							
	20		91.0						
+180		3.8							
	20		76.0						
+200		3.8							
	20		98.0						
+220		5.4							
	20		87.0						
+240		3.3							
8+254.726	20		81.0						
8+254.730									
+260		4.8							
	20		106.0						
+280		5.8							
	20		163.0						
+300		10.5							
	20		286.0						
+320		18.1							
	20		383.0						
+340		20.2							
	20		363.0						
+360		16.1							
	20		192.0						
+380		3.1							
8+398.003	19.6		58.9						
8+398.400									
+400		2.3							
	20		26.0						
+420		.3							
	20		6.0						
+440		.3							
	20		6.0						
+460		.3							
	20		32.0						
+480		2.9							
	20		125.0						
+500		9.6							
			3230.9		0.0				

SUMMARY AND BALANCES

STATION TO STATION km + m	km + m	TOTAL EXC. EARTH+ROCK m³	ROCK EXCAVATION m³	EMBANKMENT m³	EXCESSES CUT	EXCESSES FILL	ACCUMULATIVE EXCESSES CUT	ACCUMULATIVE EXCESSES FILL

REMARKS	
EARTH AND ROCK EXCAVATION	
SOLID ROCK EXCAVATION	
EARTH EXCAVATION	
PLANIMETERED FILL	
LESS FACTORED SOLID ROCK	
LESS DISPLACEMENT OF ANY LARGE STRUCTURES	
NET PLANIMETERED FILL	
FACTOR	
PLANIMETERED FILL INCLUDING FACTOR	
MATERIALS AVAILABLE FOR FILLS	
EARTH EXCAVATION	
CHANNEL EXCAVATION	
UNDERDRAIN EXCAVATION	
STRUCTURE EXCAVATION	
TOTAL MATERIAL AVAILABLE FOR FILL	
TOTAL FILL INCLUDING FACTOR	
TOTAL MATERIAL FOR FILL	
BORROW	
EXCESS EXCAVATION	

✓ W.P.
02-15-01

EER 1047.9'

R 0.0

PROJECT NAME : HIGHGATE - FRANKLIN

PROJECT NO. : STP-2S03(61)SA

DESIGN FILE NAME:
IPARM FILE NAME:
SURVEYED BY:
SQUAD LEADER:

PLOT DATE: 26-DEC-2006
SURVEY DATE:
DRAWN BY:
SHEET: 5 OF 7

STATE OF VERMONT
AGENCY OF TRANSPORTATION

EARTHWORKS

VAOT Metric

STATION km + m	DIST m	TOTAL EXCAVATION EARTH AND ROCK AREA m²	TOTAL EXCAVATION EARTH AND ROCK VOLUME m³	ROCK EXCAVATION AREA m²	ROCK EXCAVATION VOLUME m³	EMBANKMENT AREA m²	EMBANKMENT VOLUME m³	AREA m²	VOLUME m³
8+500		9.6							
	20		284.0						
+520		18.8							
	20		388.0						
+540		19.5							
	20		354.0						
+560		15.9							
	20		287.0						
+580		12.8							
	20		239.0						
+600		11.1							
	20		144.0						
+620		3.3							
	20		33.0						
+640		0							
	20		0.0						
+660		0							
	20		0.0						
+680		0							
	20		0.0						
+700		0							
	20		0.0						
+720		0							
	20		0.0						
+740		0							
	20		24.0						
+760		2.4							
	20		76.0						
+780		5.2							
	20		148.0						
+800 Bk		9.0							
+800 Ahd	20	12.3	243.0						
+820		12.0							
	20		237.0						
+840 Bk		11.7							
+840 Ahd	20	4.0	151.0						
+860		6.1							
	20		131.0						
+880		7.0							
	20		149.0						
+900		7.9							
	20		178.0						
+920		9.4							
	20		149.0						
+940		5.5							
	20		109.0						
+960		5.4							
	20		118.0						
+980		6.4							
	20		137.0						
9+000		7.3							
			3563.0		0.0				

STATION km + m	DIST m	TOTAL EXCAVATION EARTH AND ROCK AREA m²	TOTAL EXCAVATION EARTH AND ROCK VOLUME m³	ROCK EXCAVATION AREA m²	ROCK EXCAVATION VOLUME m³	EMBANKMENT AREA m²	EMBANKMENT VOLUME m³	AREA m²	VOLUME m³
9+000		7.3							
	20		133.0						
+020		6.0							
	20		122.0						
+040		6.2							
	20		158.0						
+060		9.6							
	20		168.0						
+080		7.2							
	20		141.0						
+100		6.9							
	20		136.0						
+120		6.7							
	20		126.0						
+140		5.8							
	20		104.0						
+160		4.6							
	20		78.0						
+180		3.2							
	20		98.0						
+200		6.6							
	20		200.0						
+220		13.4							
	20		284.0						
+240		15.0							
	20		329.0						
+260		17.9							
	20		318.0						
+280		13.9							
	20		267.0						
+300		12.8							
9+306.288= 14+650.000		16.29							
+660		11.8							
	20		248.0						
+680		13.0							
	20		272.0						
+700		14.2							
	20		260.0						
+720		11.8							
	20		240.0						
+740		12.2							
	20		214.0						
+760		9.2							
	20		208.0						
+780		11.6							
	20		263.0						
+800		13.7							
	20		264.0						
+820		12.7							
	20		250.0						
+840		12.3							
			5070.4		0.0				

STATION km + m	DIST m	TOTAL EXCAVATION EARTH AND ROCK AREA m²	TOTAL EXCAVATION EARTH AND ROCK VOLUME m³	ROCK EXCAVATION AREA m²	ROCK EXCAVATION VOLUME m³	EMBANKMENT AREA m²	EMBANKMENT VOLUME m³	AREA m²	VOLUME m³
14+840		12.3							
	20		177.0						
+860		5.4							
	20		122.0						
+880		6.8							
	20		186.0						
+900		11.7							
	20		191.0						
+920		7.4							
	20		148.0						
+940		7.4							
	20		151.0						
+960		5.7							
	20		139.0						
+980		8.2							
	20		199.0						
15+000		11.0							
	20		212.0						
+020		10.2							
	14		160.3						
+034		12.7							
			1657.3		0.0				

SUMMARY AND BALANCES

STATION TO STATION Km + m	Km + m	TOTAL EXC. EARTH+ROCK m³	ROCK EXCAVATION m³	EMBANKMENT m³	EXCESSES CUT	EXCESSES FILL	ACCUMULATIVE EXCESSES CUT	ACCUMULATIVE EXCESSES FILL

REMARKS

EARTH AND ROCK EXCAVATION	
SOLID ROCK EXCAVATION	
EARTH EXCAVATION	
PLANIMETERED FILL	
LESS FACTORED SOLID ROCK	
LESS DISPLACEMENT OF ANY LARGE STRUCTURES	
NET PLANIMETERED FILL	
FACTOR	
PLANIMETERED FILL INCLUDING FACTOR	
MATERIALS AVAILABLE FOR FILLS	
EARTH EXCAVATION	
CHANNEL EXCAVATION	
UNDERDRAIN EXCAVATION	
STRUCTURE EXCAVATION	
TOTAL MATERIAL AVAILABLE FOR FILL	
TOTAL FILL INCLUDING FACTOR	
TOTAL MATERIAL FOR FILL	
BORROW	
EXCESS EXCAVATION	

✓WEF
02-13-07

E&R 10290.7
R 0.0

PROJECT NAME : HIGHGATE - FRANKLIN

PROJECT NO.: STPRS 0301(1) SA

DESIGN FILE NAME:
IPARM FILE NAME:
SURVEYED BY:
SQUAD LEADER:

PLOT DATE: 26-DEC-2006
SURVEY DATE:
DRAWN BY:
SHEET: 6 OF 7

498-Earthworks

STATE OF VERMONT
AGENCY OF TRANSPORTATION

EARTHWORKS

VTrans Metric

STATION km + m	DIST m	TOTAL EXCAVATION EARTH AND ROCK AREA m²	TOTAL EXCAVATION EARTH AND ROCK VOLUME m³	ROCK EXCAVATION AREA m²	ROCK EXCAVATION VOLUME m³	EMBANKMENT AREA m²	EMBANKMENT VOLUME m³	AREA m²	VOLUME m³
TH # 32									
20+004.3		0							
	57		4.0						
+010		1.4							
	10		21.0						
+020		2.8							
	10		18.0						
+030		.8							
	10		4.0						
+040		0							
TH # 24									
21+005.6		12.8		9.6					
	2.35		30.1		22.6				
+007.95		12.8		9.6					
	2.05		25.7		20.0				
+010		12.3		9.9					
	10		112.5		85.5				
+020		10.2		7.2					
	20		179.0		115.0				
+040		7.7		4.3					
	10		69.0		39.5				
+050		6.1		3.6					
	10		32.5						
+060		0.4							
TH # 15									
22+005.6		10.7		8.4					
	44		47.1		37.0				
+010		10.7		8.4					
	10		93.0		60.5				
+020		7.9		3.7					
	20		176.0		84.0				
+040		9.7		4.7					
	20		209.0		89.0				
+060		11.2		4.2					
	10		88.0		31.5				
+070		6.4		2.1					
	7		22.4						
+077		0							
TH # 25									
23+010		0							
	10		7.5						
+020		1.5							
	10		17.0						
+030		1.9							
	10		19.5						
+040		2.0							
	10		25.0						
+050		3.0							
	6		9.0						
+056		0							
			1209.3		584.6				

STATION km + m	DIST m	TOTAL EXCAVATION EARTH AND ROCK AREA m²	TOTAL EXCAVATION EARTH AND ROCK VOLUME m³	ROCK EXCAVATION AREA m²	ROCK EXCAVATION VOLUME m³	EMBANKMENT AREA m²	EMBANKMENT VOLUME m³	AREA m²	VOLUME m³
TH # 37									
24+006.3		0							
	3.7		16.1						
24+010		8.7							
	10		88.0						
+020		8.9							
	10		70.0						
+030		5.1							
	10		41.5						
+040		3.2							
	6		9.6						
+046		0							
TH # 21									
25+006.3		0							
	3.7		28.1						
+010		15.2							
	10		119.5						
+020		8.7							
	10		74.0						
+030		6.1							
	9		39.6						
+039		2.7							
	19		25.6						
+058		0							
			512.0						
			512.0	0.0					

STATION km + m	DIST m	TOTAL EXCAVATION EARTH AND ROCK AREA m²	TOTAL EXCAVATION EARTH AND ROCK VOLUME m³	ROCK EXCAVATION AREA m²	ROCK EXCAVATION VOLUME m³	EMBANKMENT AREA m²	EMBANKMENT VOLUME m³	AREA m²	VOLUME m³
Detours			12612	- From Common Excavation Folder					
1+085 Lt to 15+024 Lt									
Ditches									
Stone fill areas not represented on cross sections									
			472.7	- From Common Excavation Folder					
Permanent Sediment Basins									
			224.4	- From Common Excavation Folder					

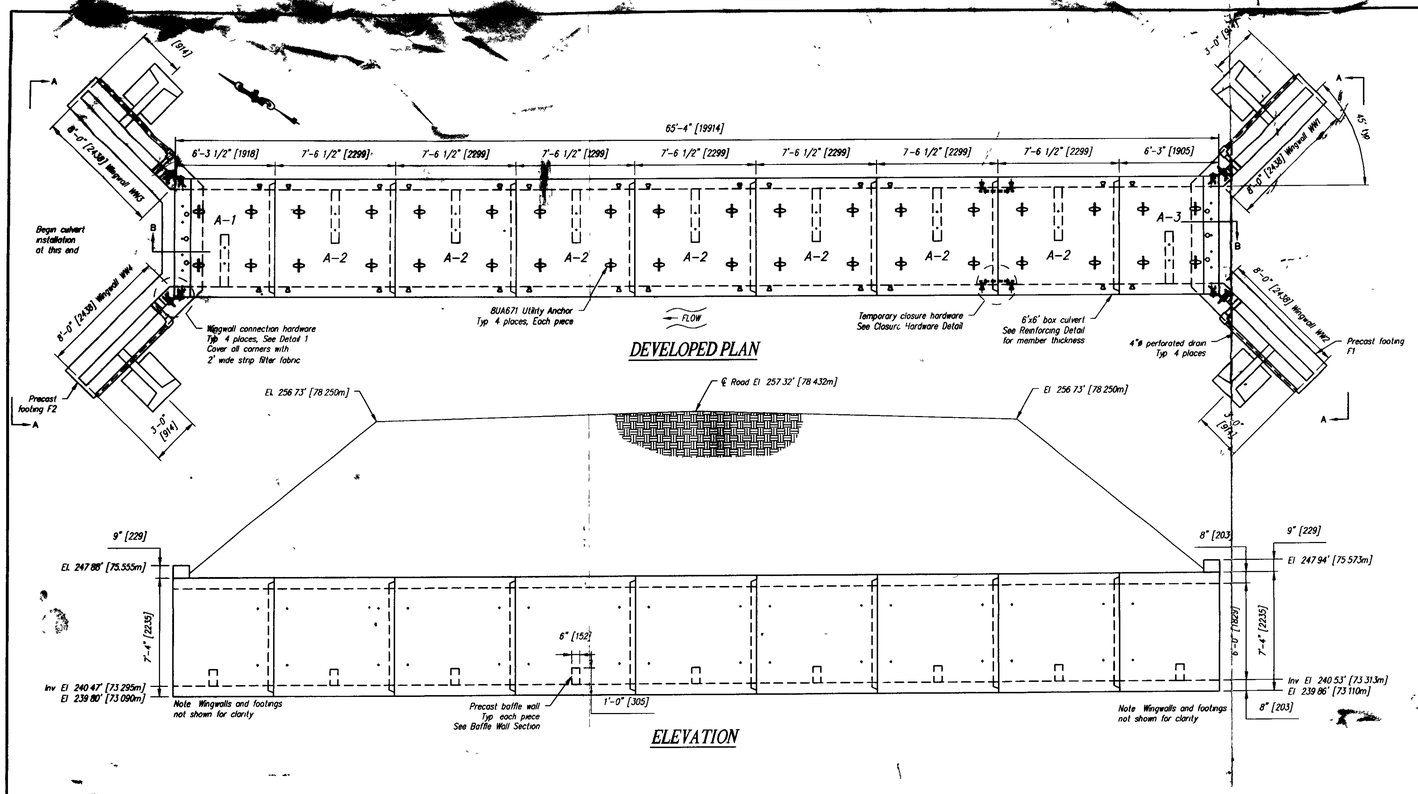

WINGWALL NOTES

GENERAL NOTES

1 The wingwalls have been designed for general site conditions. The project engineer shall be responsible for the structure's suitability to the existing site conditions and for the hydraulic evaluation -- including scour and confirmation of soil conditions.

2 Prior to construction, contractor must verify all elevations shown through the engineer

DESIGN DATA

Design Method: Load factor per AASHTO Specification
Assumed Allowable Soil Bearing 3000 PSF (Verify) — OK
Wingwalls designed for Earth Pressure Only

MATERIALS

-Precast units shall be constructed and installed in accordance with CON/SPAN Specifications.
-Concrete for Footings and Wingwalls shall have a minimum compressive strength of 4000 psi.
-Reinforcing steel for Footings and Wingwalls shall conform to ASTM A615, A616 or A617-Grade 60.

CULVERT GENERAL NOTES

1 Structure designed and built in accordance with AASHTO "Standard Specifications for Highway Bridges" and ASTM C1433
2 Design Parameters
- Live load. AASHTO HS20
- Earth Cover 8' to 10' (Designed for 6' to 10')
- Concrete Design strength f'c = 5000 psi; Unit weight = 150 pcf
- Reinforcing. ASTM A615 (rebar), grade 60; ASTM A185 (WWF) fy = 60 ksi
- Soil Unit weight = 120 pcf; Minimum lateral pressure coeffcient 25; Maximum lateral pressure coeffcient 50
- Cover to reinforcing 1 1/2" u n o

3 Dimensions include a joint gap Actual culvert piece length is ½" shorter (i e A-2 = 7'-6")
4 No dampproofing supplied by CSI
5 DBS are Dowel Bar Splicers and DI are Dowel Ins
6 Precast headwall not designed for impact load

CULVERT PIECE SCHEDULE (MX-FA5000SC)

MARK	QTY	LENGTH	YDS	WEIGHT	
A-1	1	6 25	4 47	9 06	TONS
A-2	7	7 50	5 25	10 62	TONS
A-3	1	6.25	4 70	9 51	TONS

WINGWALL PIECE SCHEDULE (MX-FA5000SC)

MARK	QTY	LENGTH	YDS	WEIGHT	
WW1	1	8 00	1 63	3 30	TONS
WW2	1	8 00	1 63	3 30	TONS
WW3	1	8 00	1 63	3 30	TONS
WW4	1	8 00	1 63	3 30	TONS
F1	1	23 42	6 87	13 91	TONS
F2	1	23 42	6 87	13 91	TONS

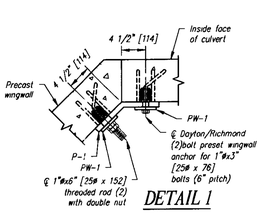

DETAIL 1

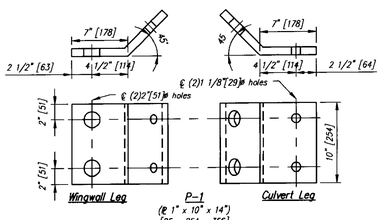

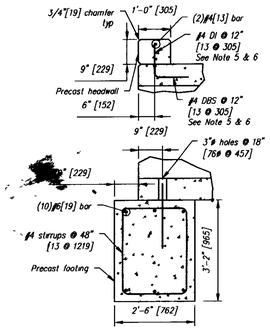

SECTION B

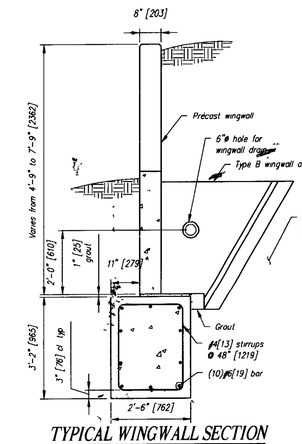

TYPICAL WINGWALL SECTION

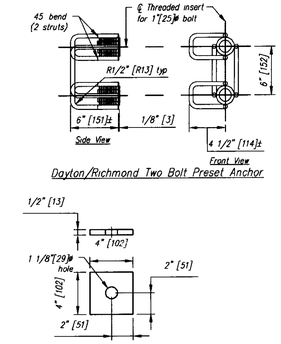

Dayton/Richmond Two Bolt Preset Anchor

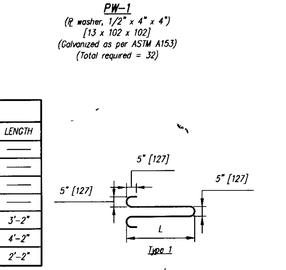

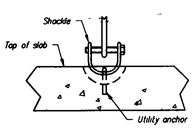

LIFTING DETAIL

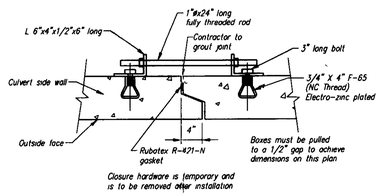

CLOSURE HARDWARE DETAIL

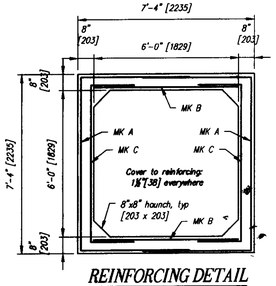

REINFORCING DETAIL

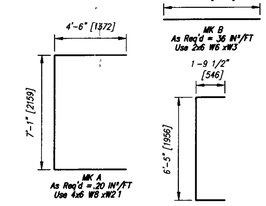

BENDING SCHEDULE

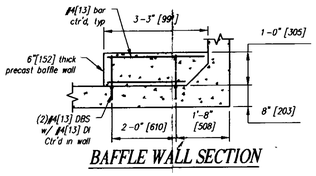

BAFFLE WALL SECTION

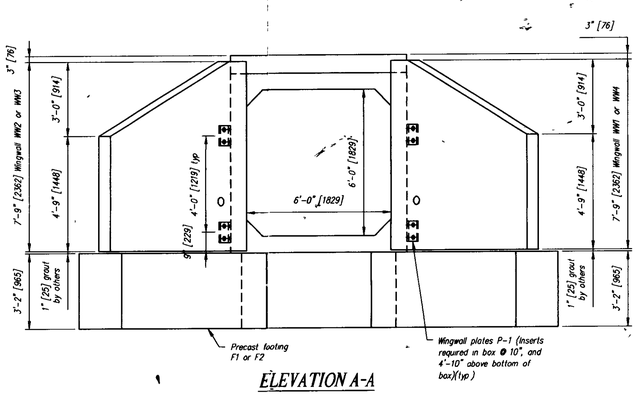

ELEVATION A-A

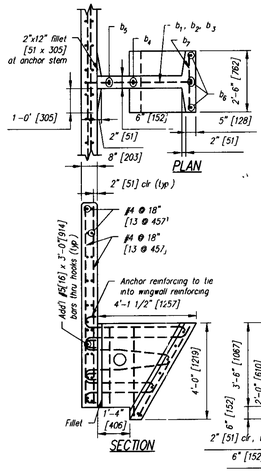

BAR LIST

MARK	QTY	SIZE	L	TYPE	LENGTH
b_1	1	#5	2'-10"	1	——
b_2	1	#5	3'-6"	3	——
b_3	1	#5	4'-2"	1	——
b_4	2	#5	3'-8"	2	——
b_5	2	#5	——	Str	3'-2"
b_6	4	#5	——	Str	4'-2"
b_7	7	#5	——	Str	2'-2"

Note "Str" denotes straight bar
Standard clearance = 2" [51]

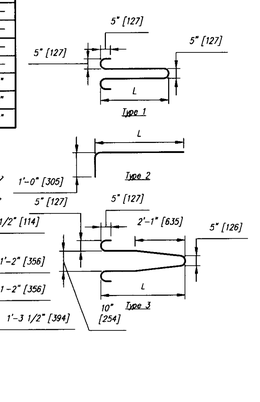

Contractor is to verify that all information shown on drawings has been thoroughly checked, complies with the contract documents and is adequate to meet the field conditions Some dimensions and details may differ slightly from contract drawings to accommodate the manufacturing or design process Approval of this drawing indicates that any deviation from the contract documents has been reviewed and found to be acceptable Production will not commence until receipt of signed, approved shop drawings

This drawing contains information proprietary to CONCRETE SYSTEMS, INC This drawing is disclosed with the understanding that it will be retained in confidence and its use limited solely to the purpose for which it is disclosed It is understood that no reproduction of this drawing is authorized without permission from CONCRETE SYSTEMS, INC and that it will be returned to CONCRETE SYSTEMS, INC upon request

Rev	Date	DESCRIPTION	By
5			
4			
3			
2			
1			

REVISIONS

This drawing is based upon information provided from the following documents and/or sources

Engineer VAOT
Project No STP RS 0301(1)SA
Drawings Highgate-Franklin
Sheets 225, 227, 229, 232, 233, 234 & 235
Specifications Higate-Franklin STP RS 0301 (1) SA – Pages 5 (schedule of items)
Section 540 – Precast Concrete Box Pages 56 through 60
Other Sources

Concrete Systems Inc.
9 Commercial St Hudson, NH 03051
Phone 603-889-4163
Fax 603-889-2417

STATE AGENCY
VAOT
STP RS 0301(1)SA

Drawn By	M SCOTT	Date 07/18/2005
Checked By	C VICK	Date 07/29/2005
Approved By		Date

J A McDONALD, INC
HIGHGATE–FRANKLIN
HIGHGATE CENTER, VT

D — BOX CULVERT LAYOUT AND DETAILS FOR STA 2+483 00 — REV 0
Drawing No C17655–LO1
Quantity 1 | Project No STP RS 0301(1)SA | SHEET 1 OF 2

500- Box Culvert

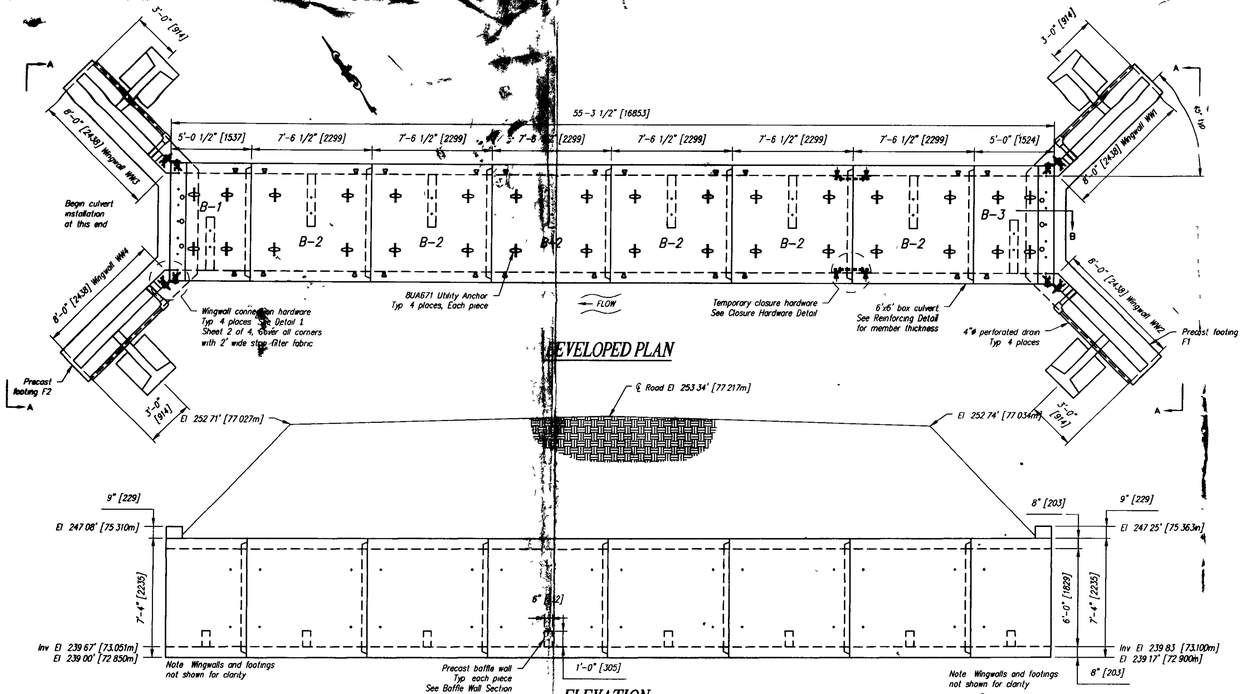

WINGWALL NOTES

GENERAL NOTES:

1 The wingwalls have been designed for general site conditions. The project engineer shall be responsible for the structure's suitability to the existing site conditions and for the hydraulic evaluation -- including scour and confirmation of soil conditions.

2 Prior to construction, contractor must verify all elevations shown through the engineer

DESIGN DATA

Design Method: Load factor per AASHTO Specification
Assumed Allowable Soil Bearing: 3000 PSF (Verify)
Wingwalls designed for Earth Pressure Only.

MATERIALS

--Precast units shall be constructed and installed in accordance with CON/SPAN Specifications.
--Concrete for Footings and Wingwalls shall have a minimum compressive strength of 4000 psi.
--Reinforcing steel for Footings and Wingwalls shall conform to ASTM A615, A616 or A617-Grade 60

CULVERT GENERAL NOTES

1 Structure designed and built in accordance with AASHTO "Standard Specifications for Highway Bridges" and ASTM C1433
2 Design Parameters
- Live load: AASHTO HS20
- Earth Cover: 6' to 8' (Designed for 6' to 10')
- Concrete: Design strength f'c = 5000 psi; Unit weight = 150 pcf
- Reinforcing: ASTM A615 (rebar), grade 60; ASTM A185 (WWF) fy = 60 ksi
- Soil: Unit weight = 120 pcf; Minimum lateral pressure coefficient 25; Maximum lateral pressure coefficient 50
- Cover to reinforcing 1 1/2" u n o

3 Dimensions include a joint gap Actual culvert piece length is ½" shorter (i e B-2 = 7'-6")
4 No damproofing supplied by CSI
5 DBS are Dowel Bar Splicers and DI are Dowel Ins
6 Precast headwall not designed for impact load
7 All dimensions in brackets, [], are in millimeters u n o

CULVERT PIECE SCHEDULE (MX-FA5000SC)					
MARK	QTY	LENGTH	YDS	WEIGHT	
B-1	1	5 00 '	3 61	7 31	TONS
B-2	6	7 50 '	5 25	10 62	TONS
B-3	1	5 00 '	3 83	7 76	TONS

WINGWALL PIECE SCHEDULE (MX-FA5000SC)					
MARK	QTY	LENGTH	YDS	WEIGHT	
WW1	1	8 00 '	1 63	3 30	TONS
WW2	1	8 00 '	1 63	3 30	TONS
WW3	1	8 00 '	1 63	3 30	TONS
WW4	1	8 00 '	1 63	3 30	TONS
F-1	1	23 42 '	6 87	13 91	TONS
F2	1	23 42 '	6 87	13 91	TONS

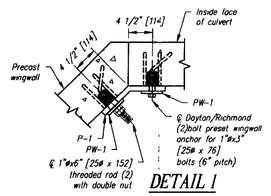

DETAIL 1

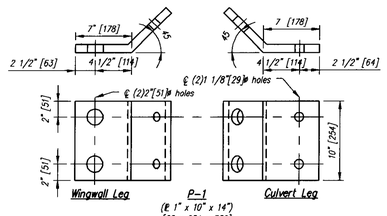

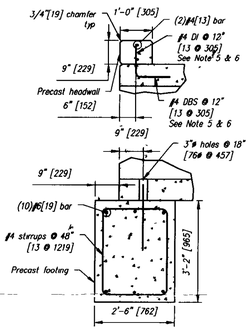

SECTION B

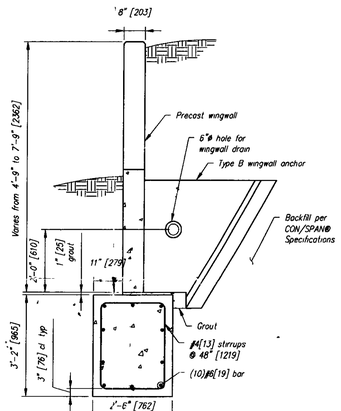

TYPICAL WINGWALL SECTION

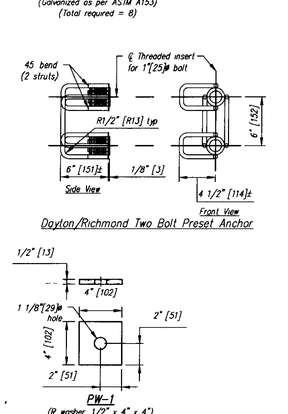

Dayton/Richmond Two Bolt Preset Anchor

PW-1
(℄ washer 1/2" x 4" x 4") [13 x 102 x 102] (Galvanized as per ASTM A153) (Total required = 32)

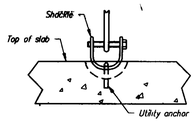

LIFTING DETAIL

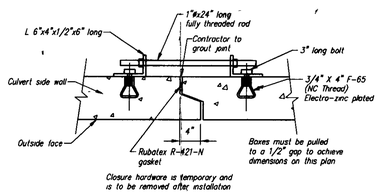

CLOSURE HARDWARE DETAIL

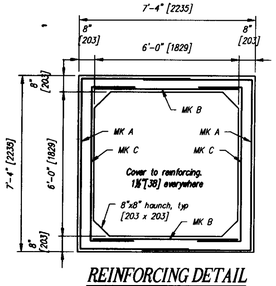

REINFORCING DETAIL

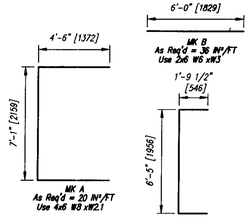

BENDING SCHEDULE

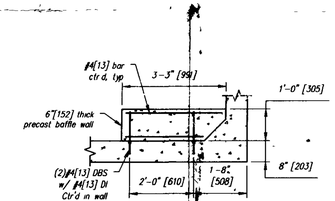

BAFFLE WALL SECTION

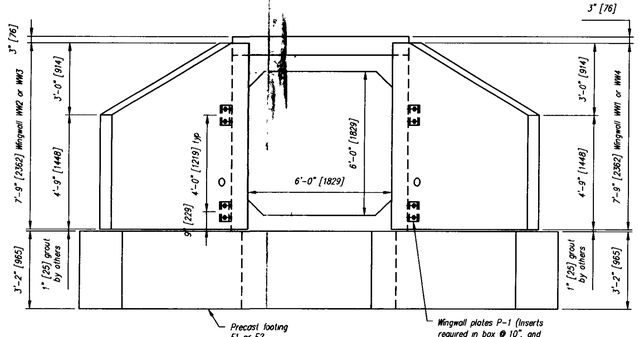

ELEVATION A-A

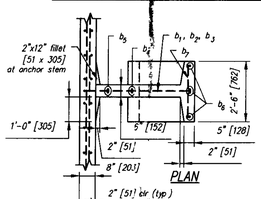

PLAN

BAR LIST					
MARK	QTY	SIZE	L	TYPE	LENGTH
b_1	1	#5	2'-10"	1	——
b_2	1	#5	3'-6"	3	——
b_3	1	#5	4'-2"	1	——
b_4	2	#5	3'-8"	2	——
b_5	2	#5	——	Str	3'-2"
b_6	4	#5	——	Str	4'-2"
b_7	7	#5	——	Str	2'-2"

Note "Str" denotes straight bar
Standard clearance = 2" [51]

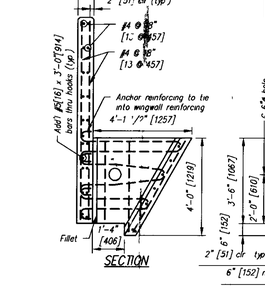

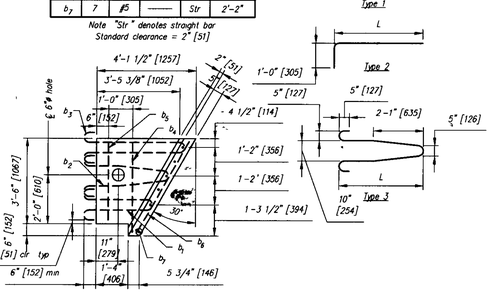

Contractor is to verify that all information shown on drawings has been thoroughly checked, complies with the contract documents and is adequate to meet the field conditions. Some dimensions and details may differ slightly from contract drawings to accommodate the manufacturing or design process Approval of this drawing indicates that any deviation from the contract documents has been reviewed and found to be acceptable Production will not commence until receipt of signed, approved shop drawings

This drawing contains information proprietary to CONCRETE SYSTEMS, INC This drawing is disclosed with the understanding that it will be retained in confidence and its use limited solely to the purpose for which it is disclosed It is understood that no reproduction of this drawing is authorized without permission from CONCRETE SYSTEMS, INC and that it will be returned to CONCRETE SYSTEMS, INC upon request

Rev	Date	DESCRIPTION	By
5			
4			
3			
2			
1			

REVISIONS

This drawing is based upon information provided from the following documents and/or sources

Engineer	VAOT
Project No	STP RS 0301(1)SA
Drawings	Highgate-Franklin Sheets 225, 227, 229, 232, 233, 234 & 235
Specifications	Higate-Franklin STP RS 0301 (1) SA – Pages 5 (schedule of items) Section 540 – Precast Concrete Box Pages 56 through 60
Other Sources	

Concrete Systems Inc
9 Commercial St Hudson, NH 03051
Phone 603-889-4163
Fax 603-889-2417

STATE AGENCY
VAOT
STP RS 0301(1)SA

Drawn By	M SCOTT	Date 07/18/2005
Checked By	C VICK	Date 07/29/2005
Approved By		Date

J A McDONALD, INC
HIGHGATE–FRANKLIN
HIGHGATE CENTER, VT

D — BOX CULVERT LAYOUT AND DETAILS FOR STA 3+627 50 — REV 0

Drawing No C17655–L02

Quantity 1 | Project No STP RS 0301(1)SA | SHEET 2 OF 2