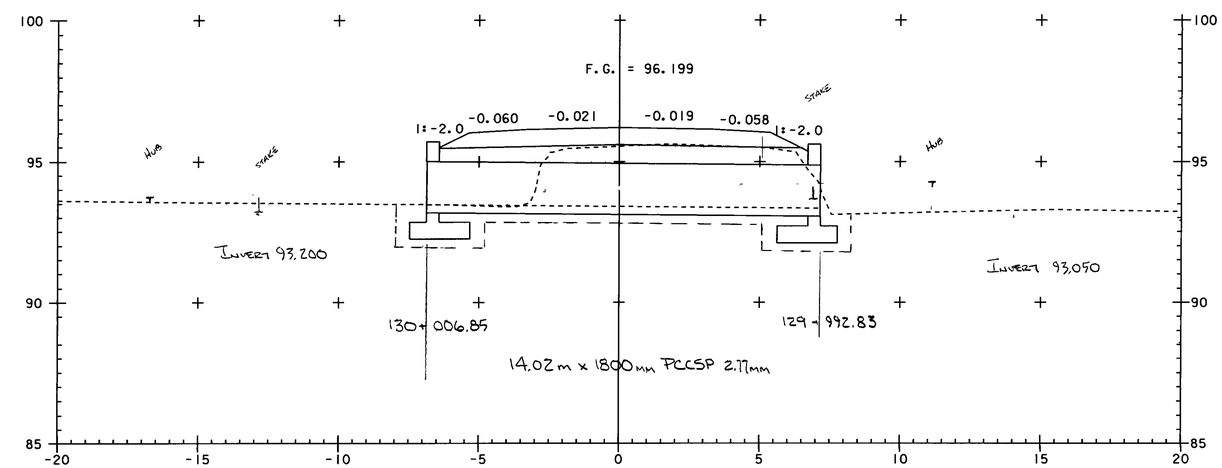

6+189.250 = 130+000.000
ASKEW = 81°00'00"
DESIGN SECTION
W/ FIELD PROFILE

DRAINAGE SHEET # 21

478-Drainage