Metric

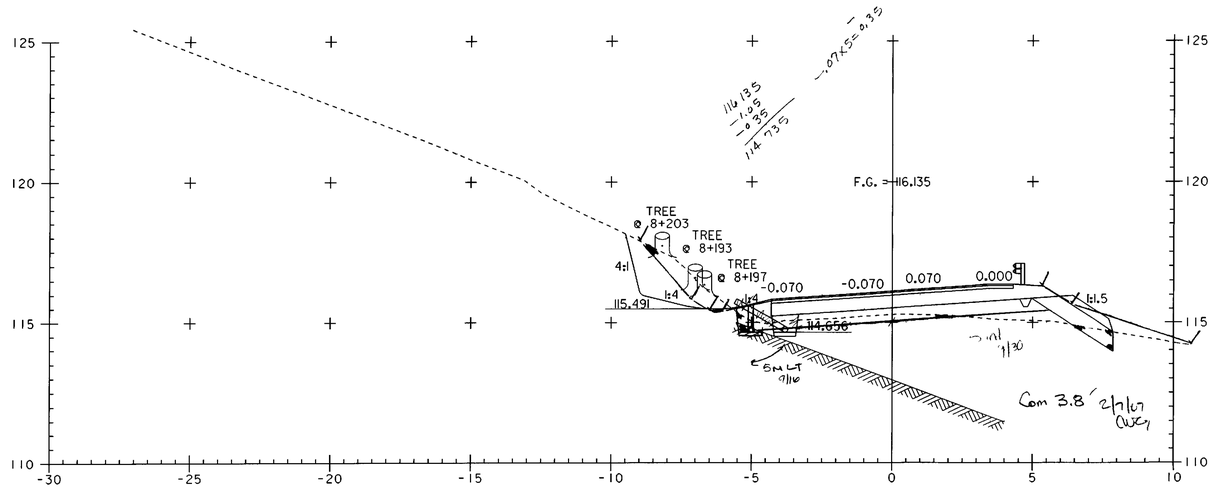

8+200

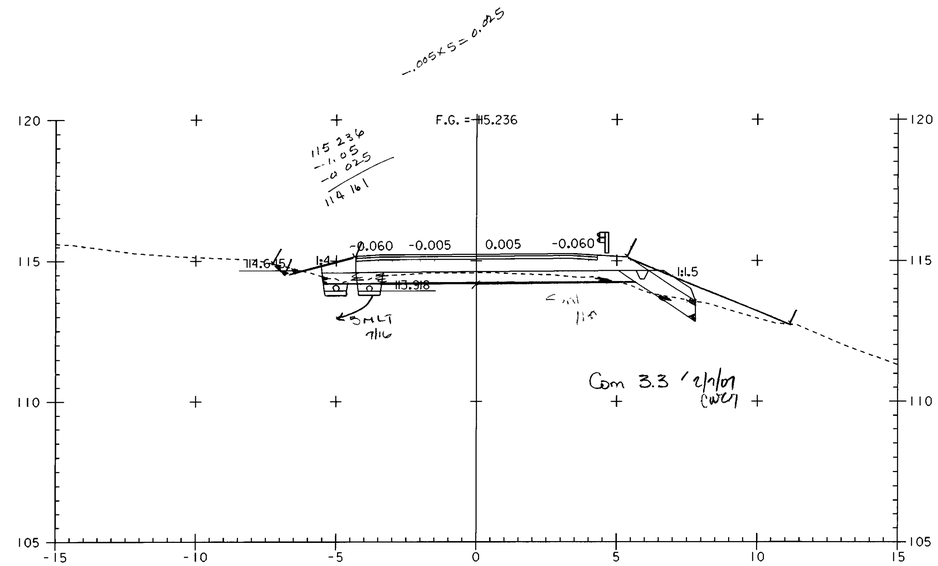

8+240

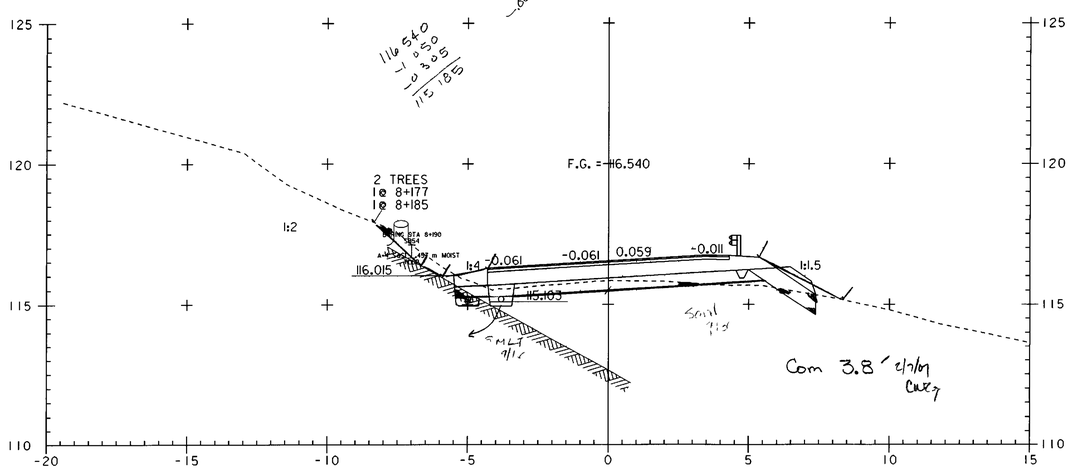

8+180

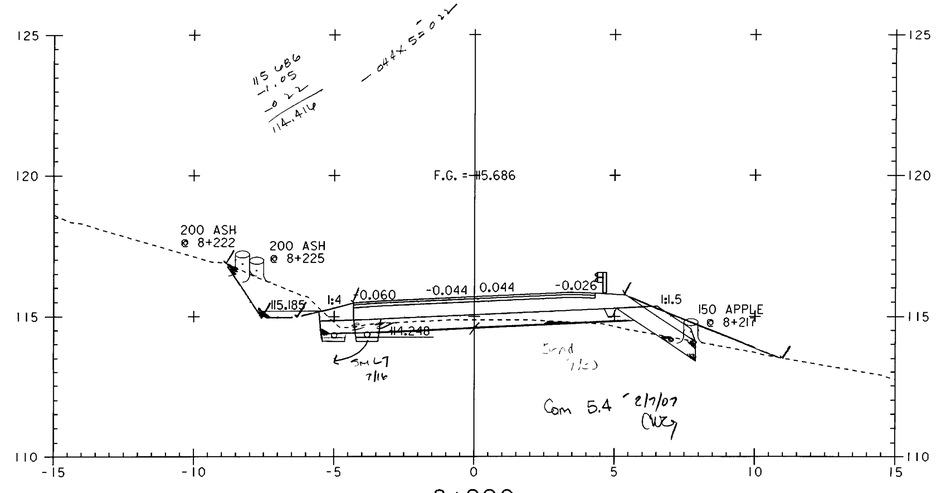

8+220

0 2 4 6 8 10
SCALE IN METERS

PROJECT NAME: HIGHGATE - FRANKLIN	
PROJECT NUMBER: STP RS 0301(1) SA	
FILE NAME: ...85c060\design\dc060x10.dgn	PLOT DATE: 09-MAY-2005
PROJECT LEADER: DELLASANTA	DRAWN BY: SQUAD B
DESIGNED BY: SQUAD B	CHECKED BY: SQUAD B
IPARM FILE NAME: dc060x1010.i	SHEET 414 OF 450