Metric

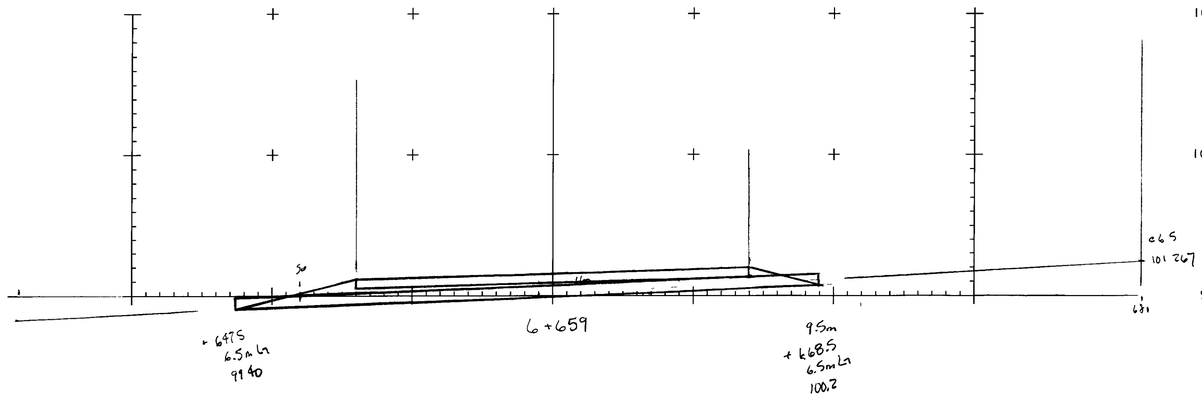

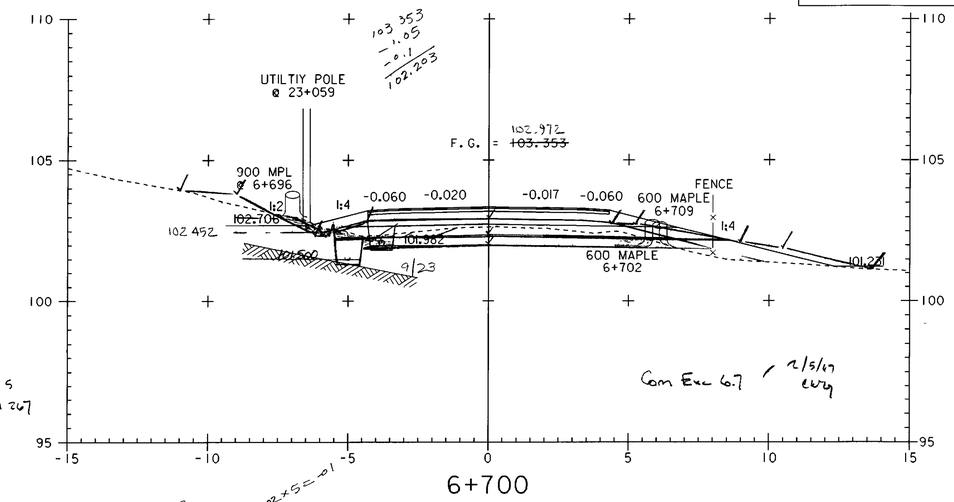

STA 6+686.640 END TAPER
STA 6+684.380 END FULL DEPTH SAND (450MM) BEGIN TAPER

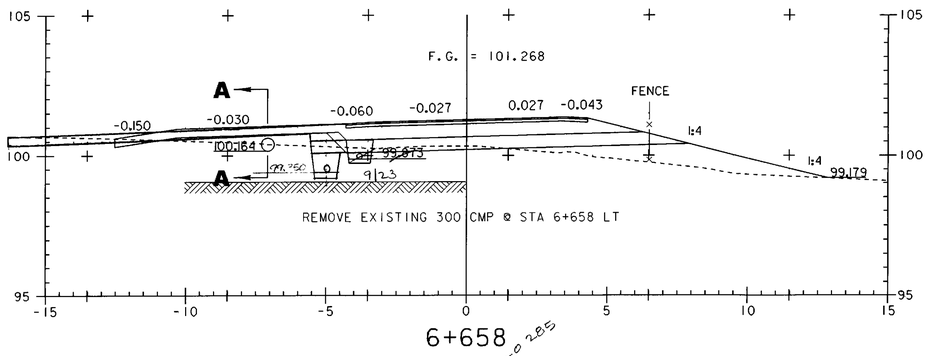

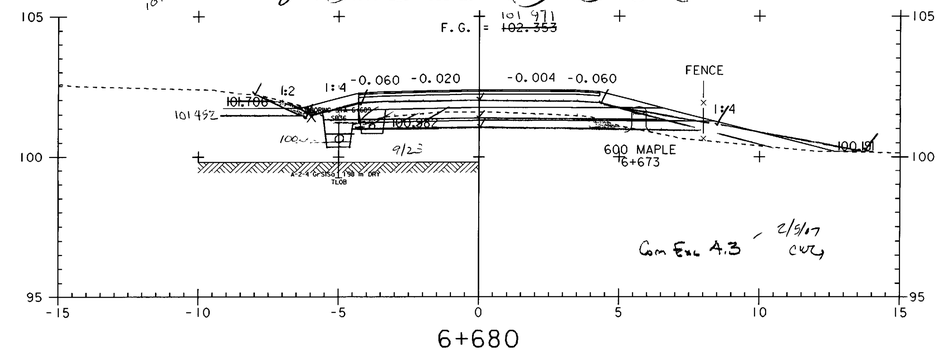

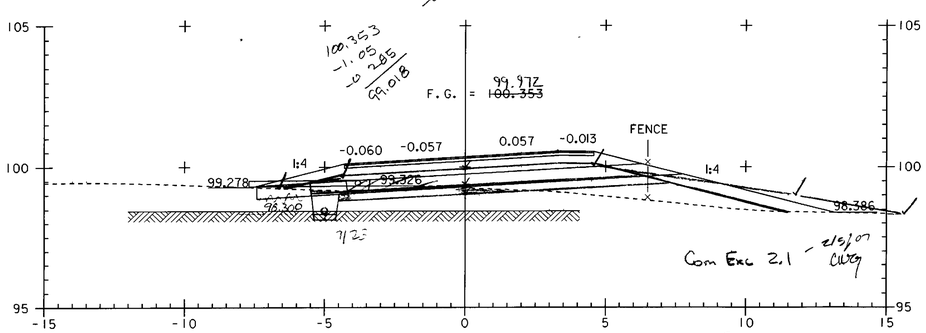

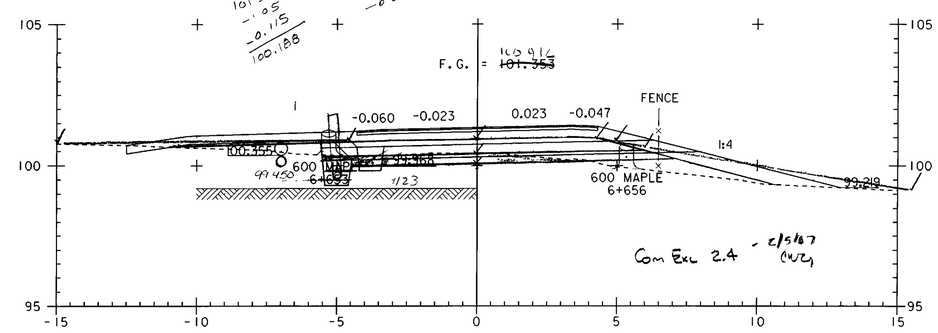

0 2 4 6 8 10
SCALE IN METERS

PROJECT NAME: HIGHGATE - FRANKLIN	
PROJECT NUMBER: STP RS 0301(1) SA	
FILE NAME: ...85c060\design\dc060x08.dgn	PLOT DATE: 09-MAY-2005
PROJECT LEADER: DELLASANTA	DRAWN BY: SQUAD B
DESIGNED BY: SQUAD B	CHECKED BY: SQUAD B
IPARM FILE NAME: dc060x0820.i	SHEET 385 OF 450