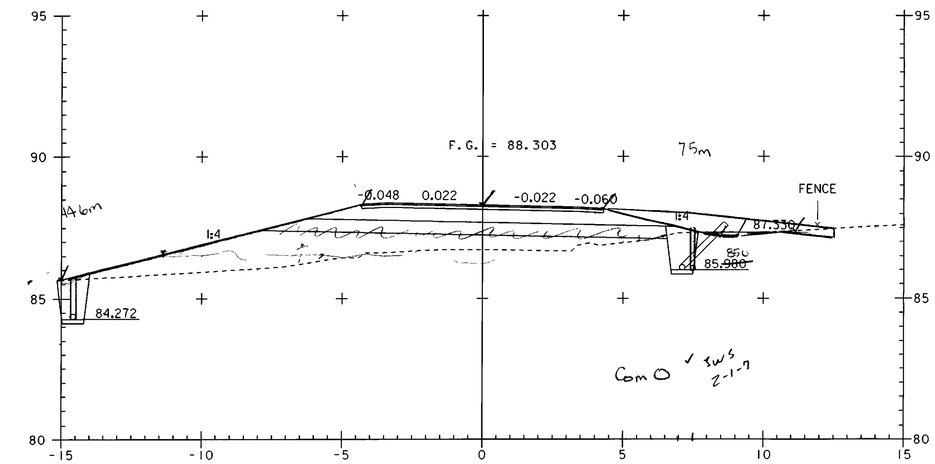

4+220 - BEGIN STONE TAPER

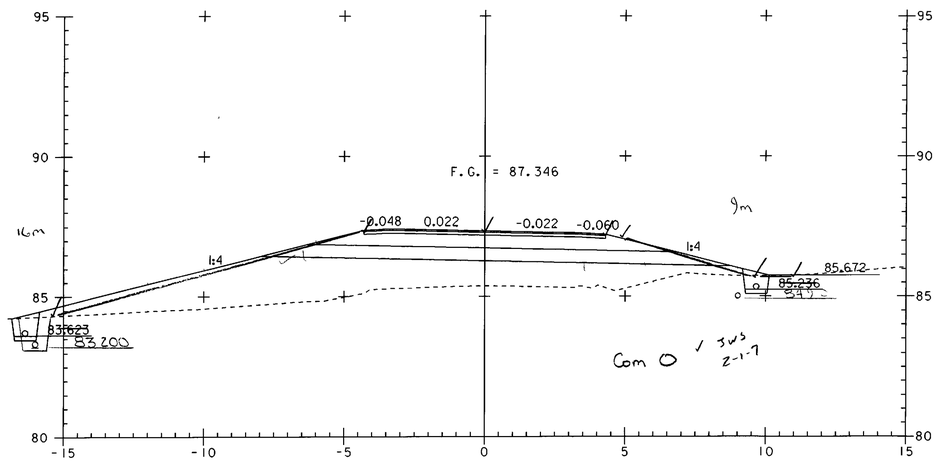

4+200

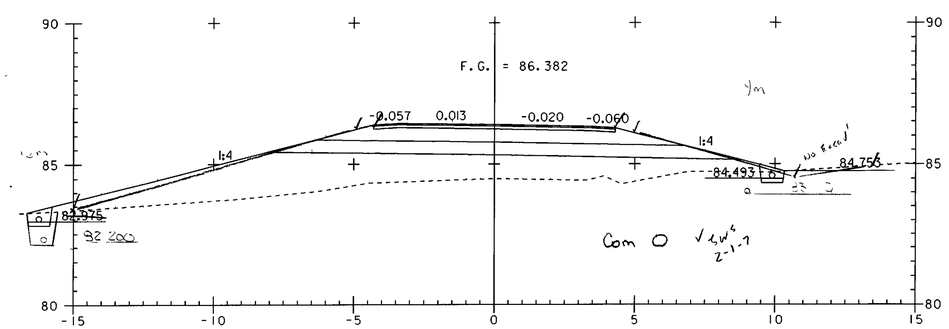

4+180

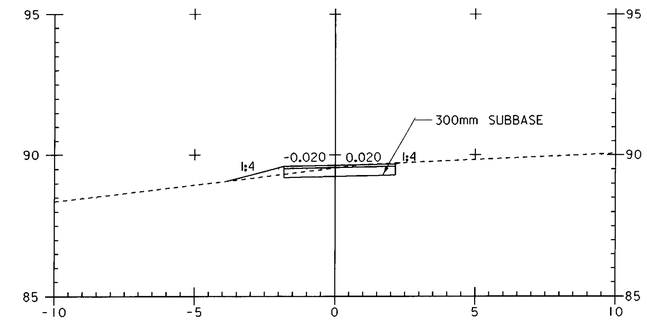

DRIVE AT 4+255 LT
A - A

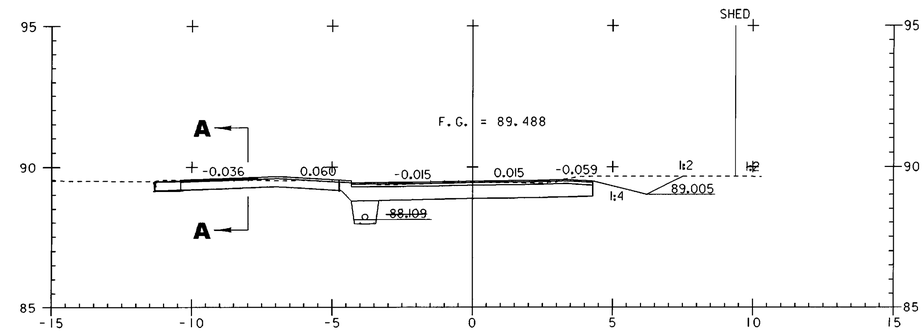

4+255

STA 4+240.060 END TAPER

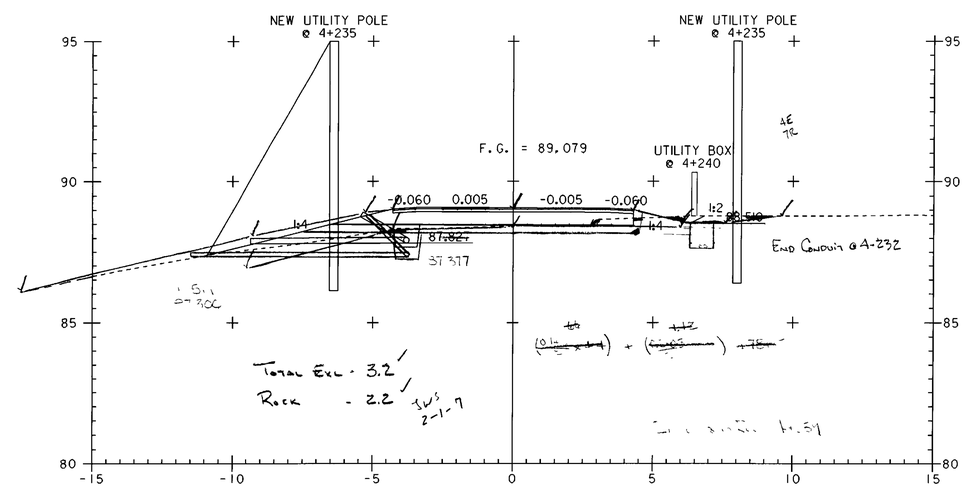

4+240

STA ~~4+237.980 END~~ FULL DEPTH ~~SAND~~ (~~450~~MM) ~~BEGIN TAPER~~

0 2 4 6 8 10
SCALE IN METERS

PROJECT NAME: HIGHGATE - FRANKLIN	
PROJECT NUMBER: STP RS 0301(1) SA	
FILE NAME: ...85c060\design\dc060x06.dgn	PLOT DATE: 09-MAY-2005
PROJECT LEADER: DELLASANTA	DRAWN BY: SQUAD B
DESIGNED BY: SQUAD B	CHECKED BY: SQUAD B
IPARM FILE NAME: dc060x062.i	SHEET 338 OF 450