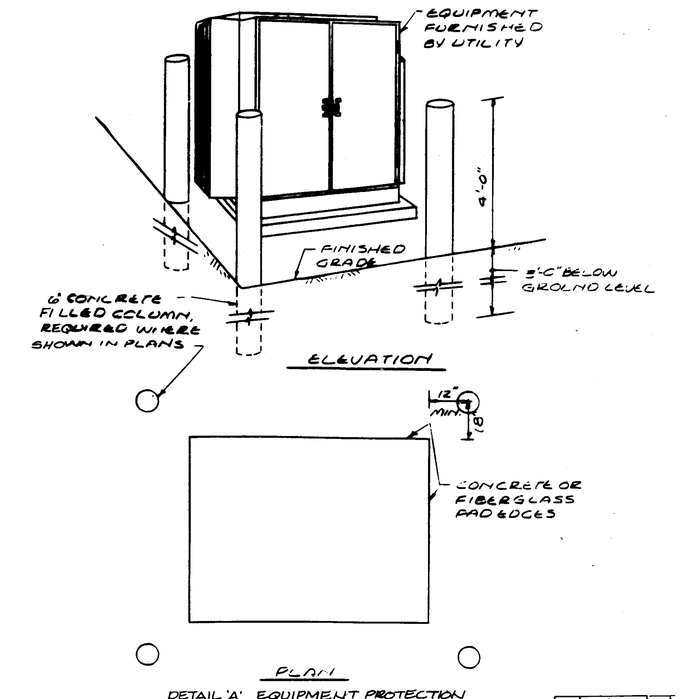

DETAIL 'A' EQUIPMENT PROTECTION
NOT TO SCALE

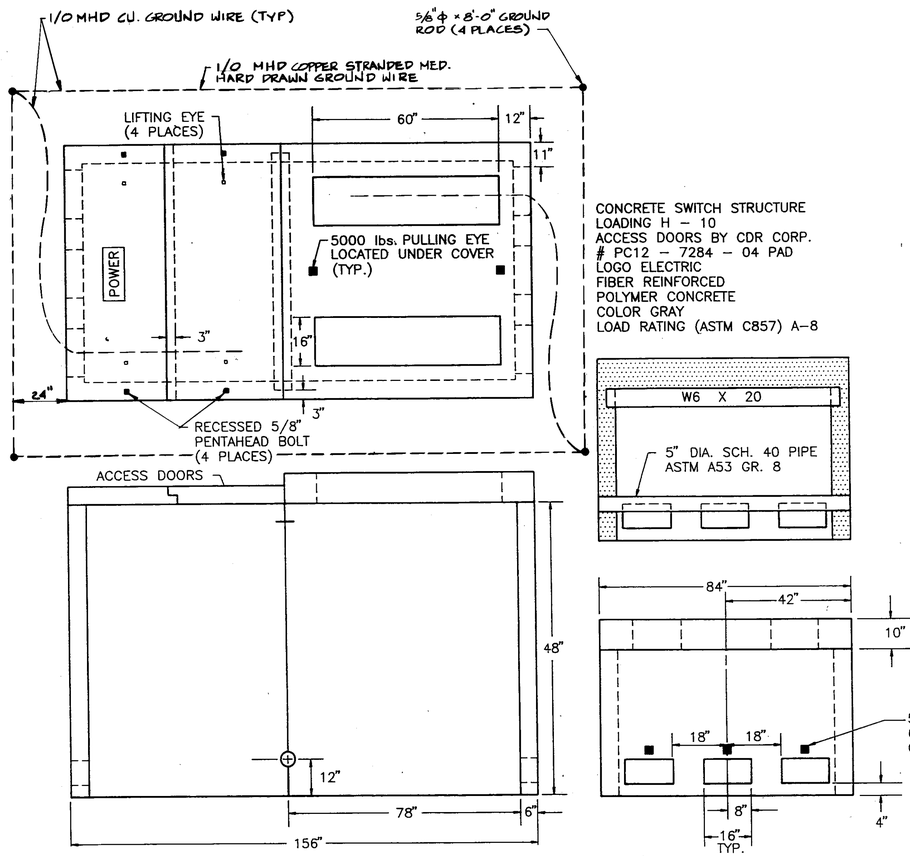

CONCRETE SWITCH STRUCTURE
LOADING H – 10
ACCESS DOORS BY CDR CORP.
PC12 – 7284 – 04 PAD
LOGO ELECTRIC
FIBER REINFORCED
POLYMER CONCRETE
COLOR GRAY
LOAD RATING (ASTM C857) A–8

MTC, CONCRETE SWITCH STRUCTURE

SCALE 1/2" = 1'– 0"
NOTE: SEE GROUNDING DETAIL "B" FOR ADDITIONAL GROUNDING INFO.

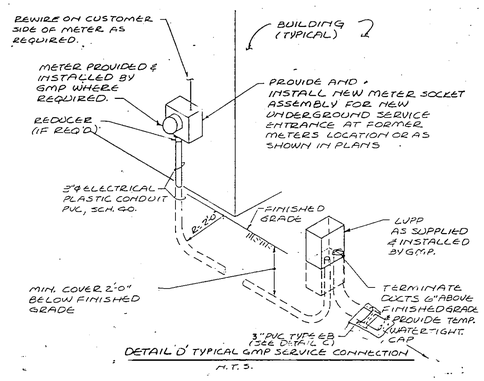

DETAIL 'D' TYPICAL GMP SERVICE CONNECTION
N.T.S.

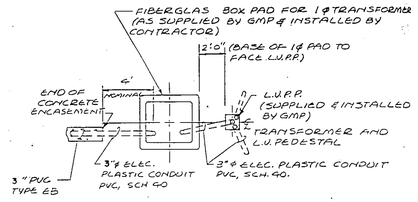

DETAIL 'E' PLAN AT 1ϕ TRANSFORMER FIBERGLAS PAD & LOW VOLTAGE POWER PEDESTAL

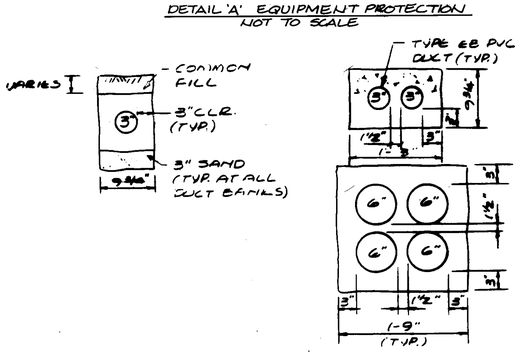

NOTE: SEE TYPICAL 4 COLUMN DUCT BANK FOR ADDITIONAL INFORMATION

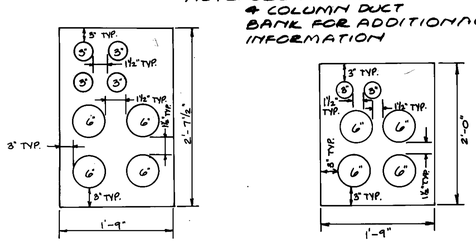

TYPICAL SECTIONS OF CONCRETE ENCASED DUCT BANK FOR GREEN MOUNTAIN POWER
NOT TO SCALE

WITHIN CONSTRUCTION LIMITS, SUBGRADE LINE IS DEFINED BY THE HIGHWAY TYPICAL SECTION. USE COMMON FILL BELOW SUBGRADE. OUTSIDE CONSTRUCTION LIMITS, FINISH GRADE IS AS SHOWN IN THE PLANS. BACKFILL TO MATCH EXISTING GRADE.

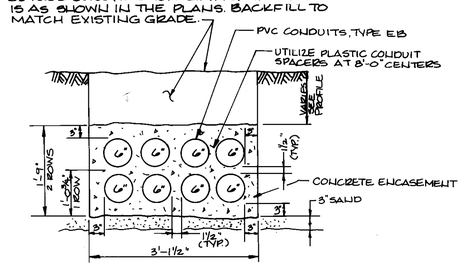

TYPICAL SECTION FOR 4 COLUMN CONCRETE ENCASED DUCT BANK FOR GREEN MOUNTAIN POWER
NOT TO SCALE

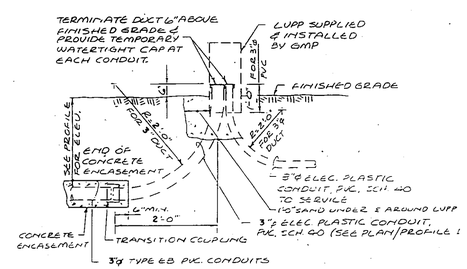

DETAIL 'C' LOW VOLTAGE POWER PEDESTAL (LVPP)

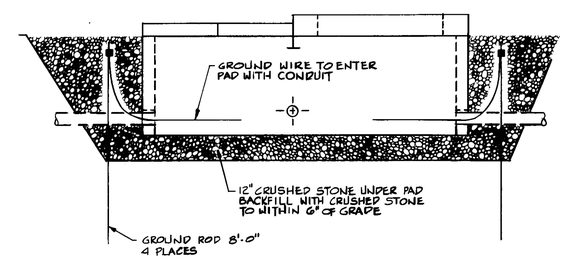

GROUNDING DETAIL "B"
SCALE: N.T.S.

Rev.	Description	By	Date
1	DUCT BANKS	JTM	4/10/92
2	NEW SWITCH STRUCTURE	JTM	4/24/92
3	ADD GROUNDING DETAILS	JTM	6/15/92

STATE OF VERMONT — ALEC C. TUSCANY — NO. 3664 — REGISTERED PROFESSIONAL ENGINEER

CITY OF MONTPELIER
BERLIN STREET RESTORATION PROJECT
GREEN MOUNTAIN POWER DETAILS
MONTPELIER, VERMONT

D.R. Keane-Henry Inc.
Consulting Engineers
Montpelier, VT 05602

Client No.	618040
Proj. Manager	A. TUSCANY
Proj. Designer	J. MYERS
Drawn By	J.E. SHATNEY
Checked By	L.B. LACKEY
Scale	AS SHOWN
Approved	
Date	27 NOV. 1990

Sheet 10/E of 3[illegible]
Sheet 5 of 7
D 618040-05

BRUNING 45337-3