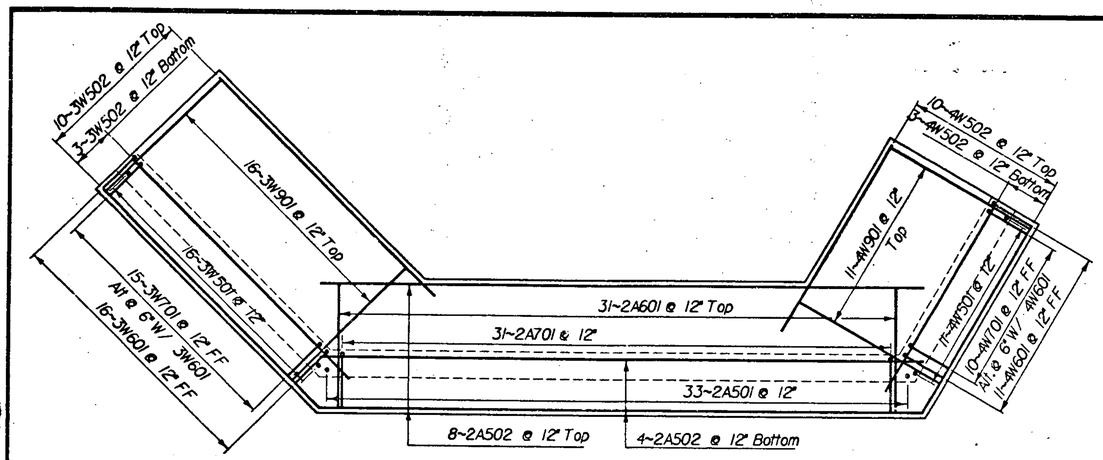

FOOTING REINFORCING PLAN

Scale 1/4" = 1'-0"

▲ Indicates Cut to Fit in Field

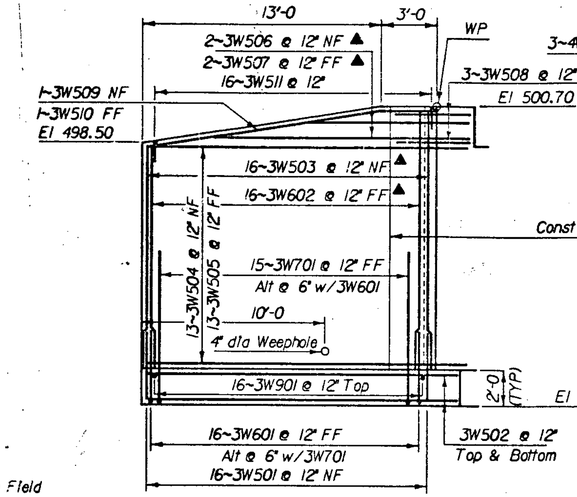

WW # 3 ELEVATION

Scale 1/4" = 1'-0"

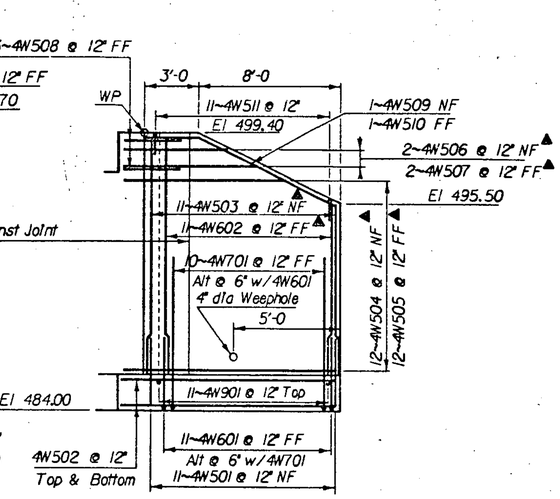

WW # 4 ELEVATION

Scale 1/4" = 1'-0"

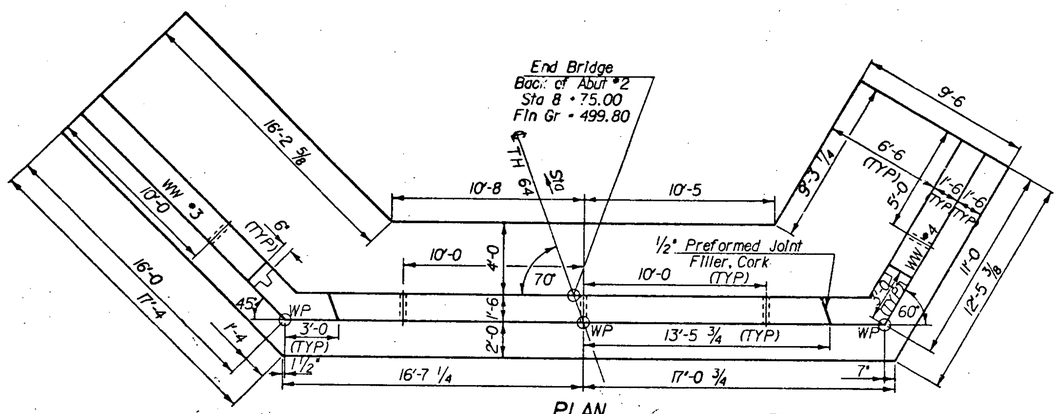

PLAN

Scale 1/4" = 1'-0"

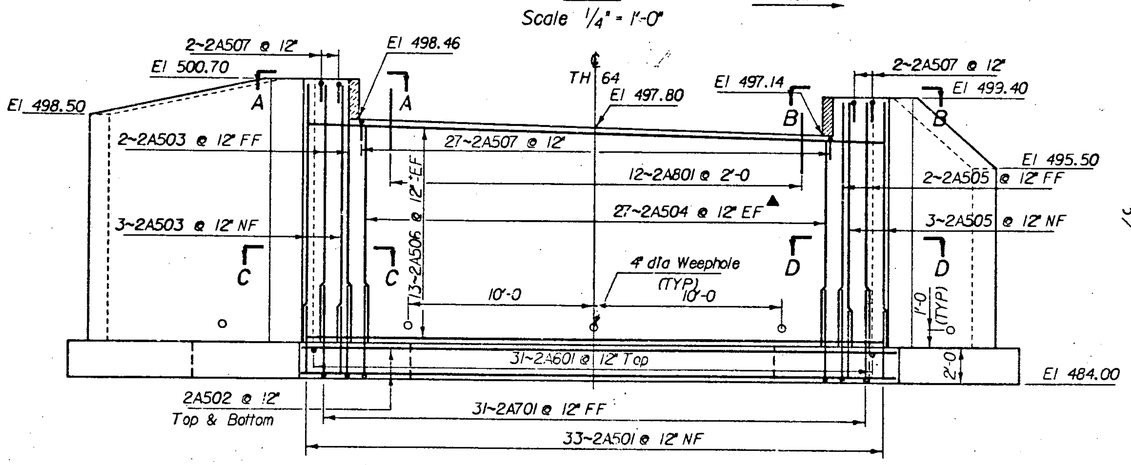

ABUTMENT #2 ELEVATION

Scale 1/4" = 1'-0"

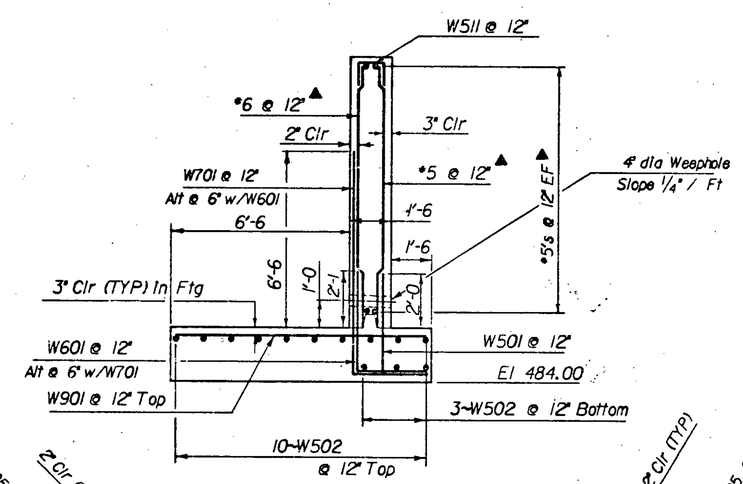

TYPICAL WINGWALL SECTION

Scale 3/8" = 1'-0"

SECTION A-A, B-B & THE TYPICAL ABUTMENT SECTION IS ON SHEET 6 of 23.

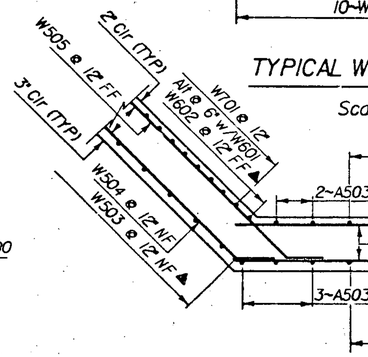

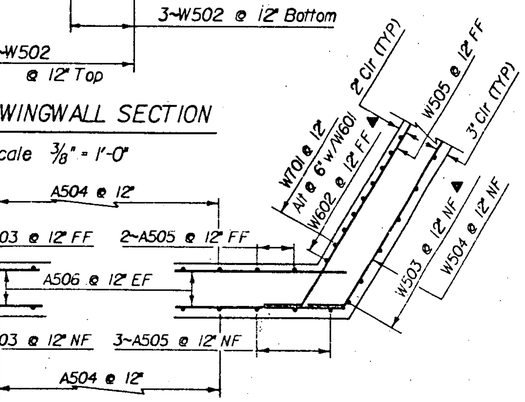

SECTION C-C

Scale 1/2" = 1'-0"

SECTION D-D

Scale 1/2" = 1'-0"

STATE OF VERMONT
AGENCY OF TRANSPORTATION

Town Of MORRISTOWN	Bridge No. 35
Highway No. TH #64	Log Sta. —— / Surv. Sta. 8 + 60.50
TH #64 over Sterling Brook	
ABUTMENT No 2 DETAILS	
Designed By C. P. Williams	Drawn By E. Blodgett
Checked By G. Rogers Date 9/84	Bridge Design Supervisor F. W. Balkum Date 9/84
PROJECT MORRISTOWN	PROJECT NO. FTH 3531
L.G.C. Info.	OSAn(30,23)FTH3531A3.DGN
Bridge Sheet No.	Sheet 7 of 23

BR-6

BRUNING 62165