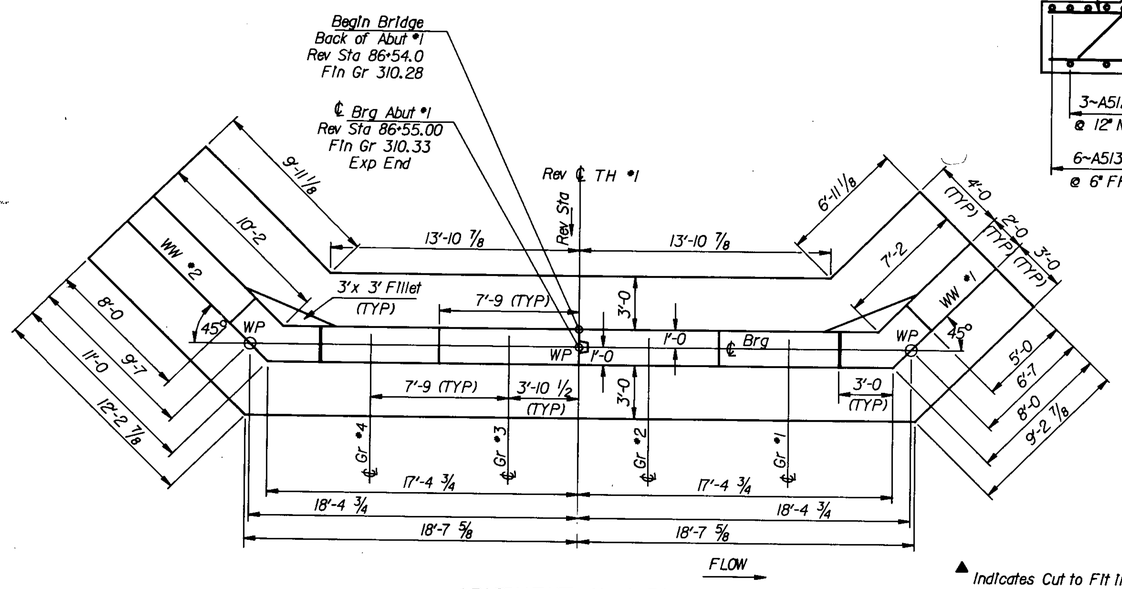

ABUTMENT No 1 PLAN

Scale 1/4" = 1'-0"

▲ Indicates Cut to Fit In Field

FF = Far Face
NF = Near Face
EF = Each Face

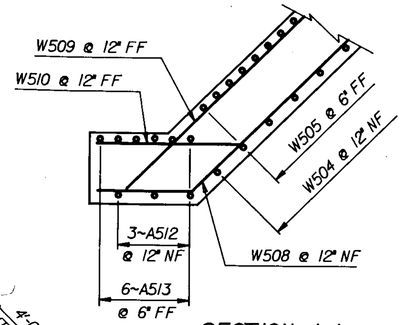

SECTION A-A

Scale 1/2" = 1'-0"

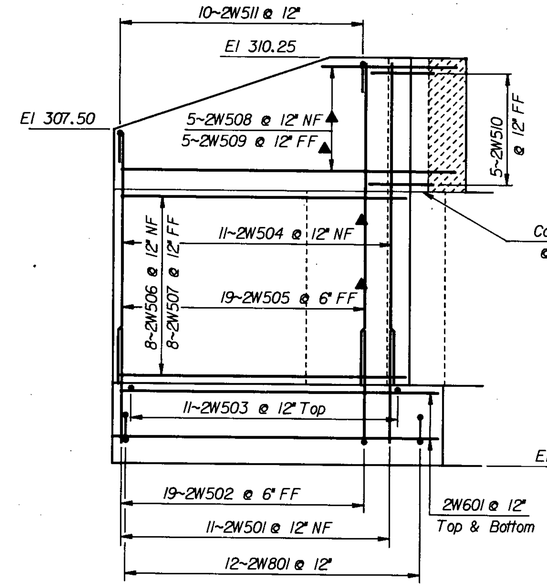

WINGWALL No 2 ELEVATION

Scale 3/8" = 1'-0"

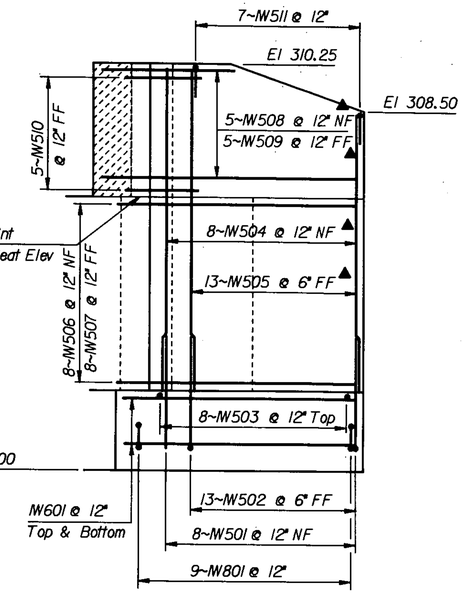

WINGWALL No 1 ELEVATION

Scale 3/8" = 1'-0"

SECTION A-A & B-B are TYPICAL for both Abutments.

TYPICAL WINGWALL SECTION Is on next sheet.

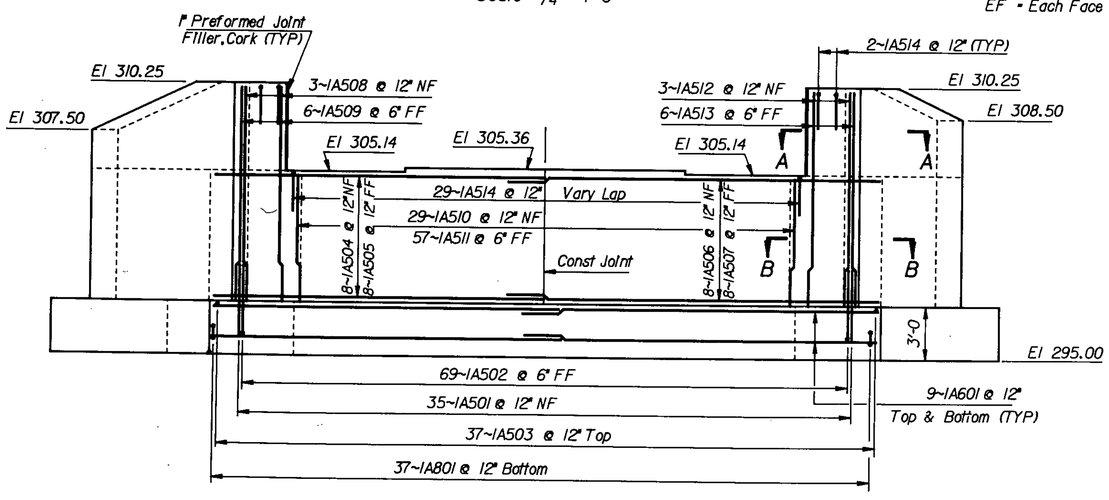

ABUTMENT No 1 ELEVATION

Scale 1/4" = 1'-0"

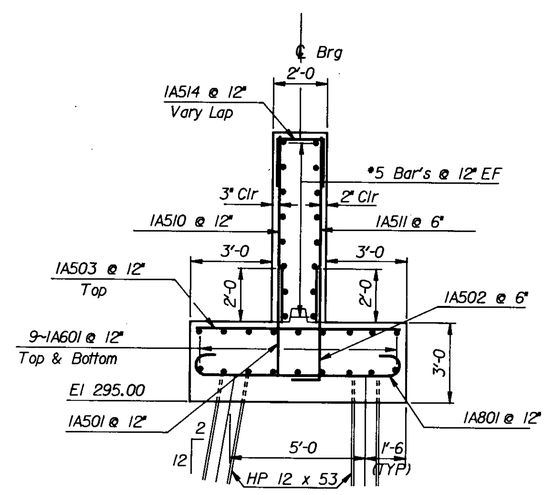

ABUTMENT No 1 TYPICAL SECTION

Scale 3/8" = 1'-0"

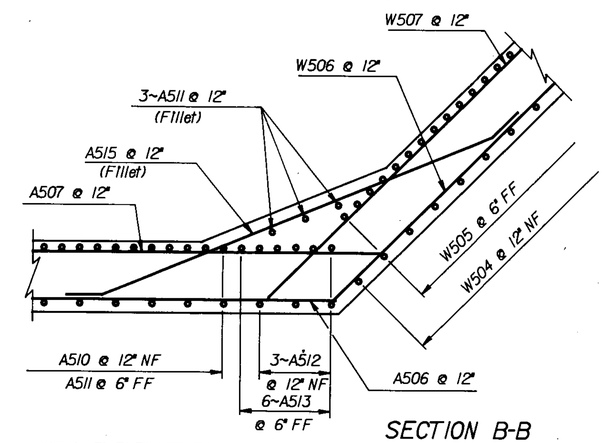

NOTE: 3'x3' FILLET TO BRIDGE SEAT ELEVATION ONLY (TYP BOTH ABUTS)

SECTION B-B

Scale 1/2" = 1'-0"

STATE OF VERMONT
AGENCY OF TRANSPORTATION

Town Of GEORGIA	Bridge No. 10
Highway No. TH #1	Log Sta. —— Sta. Rev 88+15.00
TH #1 over LAMOILLE RIVER	
ABUTMENT No 1 DETAILS	
Designed By G. WILLIAMS	Drawn By E. BLODGETT
Checked By G. ROGERS Date 12/84	Bridge Design Supervisor F.W. Bolkum Date 2/85
PROJECT GEORGIA	PROJECT NO. BRZ 1448(3)
L.G.C. Info.	GSAK(30,2)363B070ABI.DGN
Bridge Sheet No.	Sheet 24 of 61