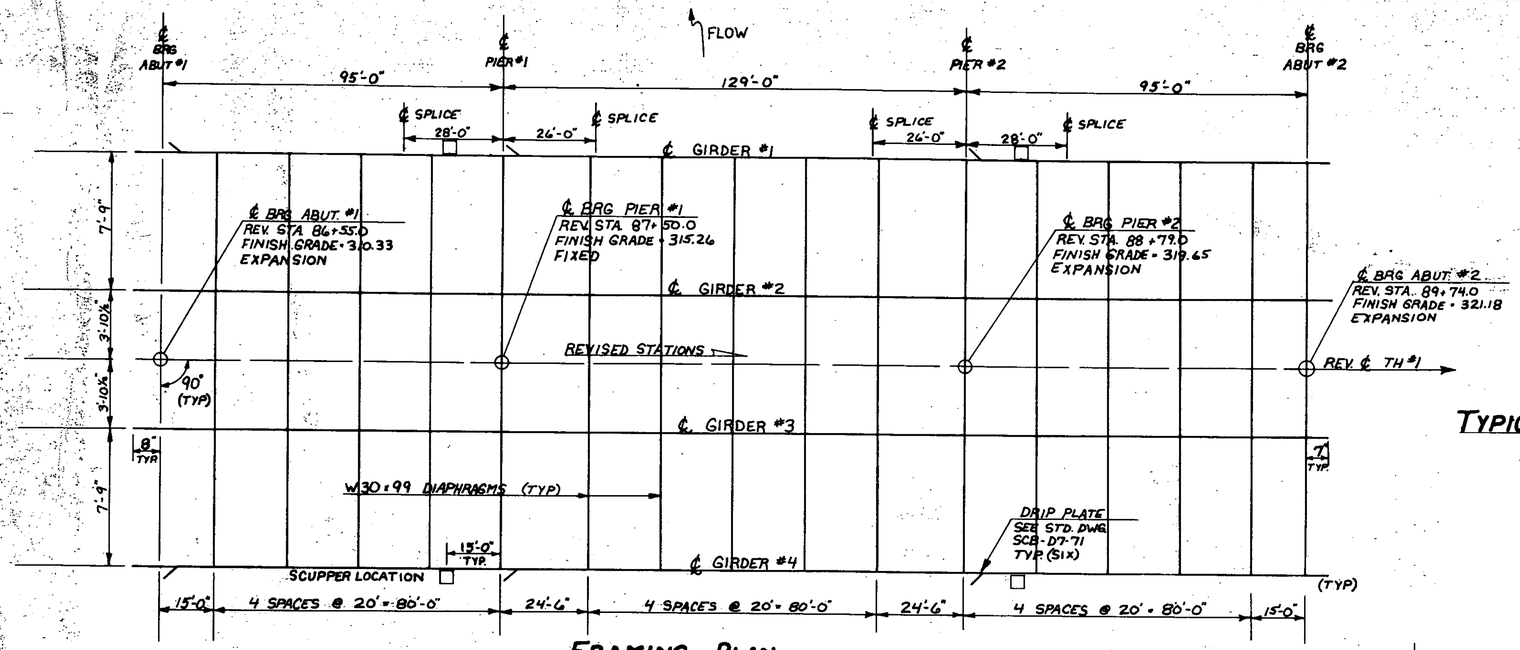

FRAMING PLAN

1" = 20'
1" = 4'

NOTE:
DELETE HOLES IN BEARING STIFFENER ON OUTSIDE OF FASCIA GIRDERS.

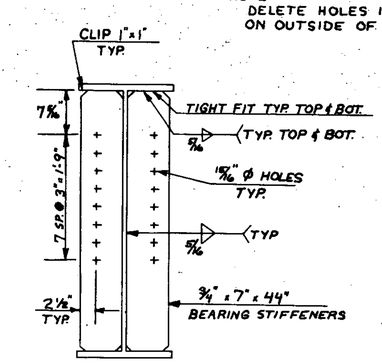

TYPICAL BEARING STIFFENER @ ABUT. #2

1" = 1'-0"

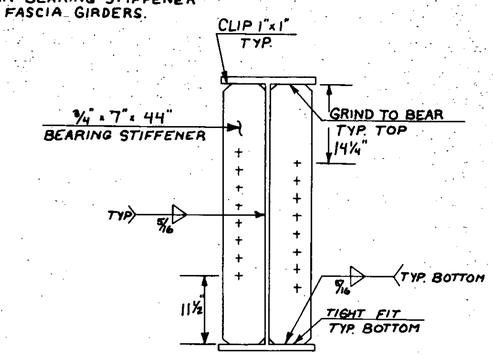

TYPICAL BEARING STIFFENER @ PIERS

1" = 1'-0"

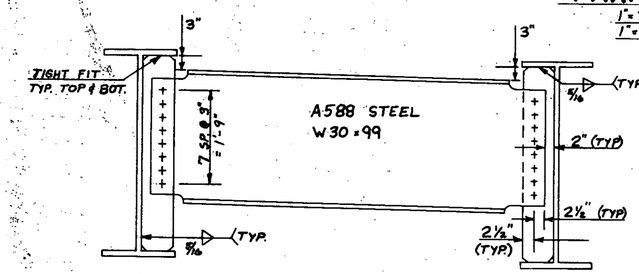

DIAPHRAGM DETAIL @ ABUT. #2

3/4" = 1'-0"

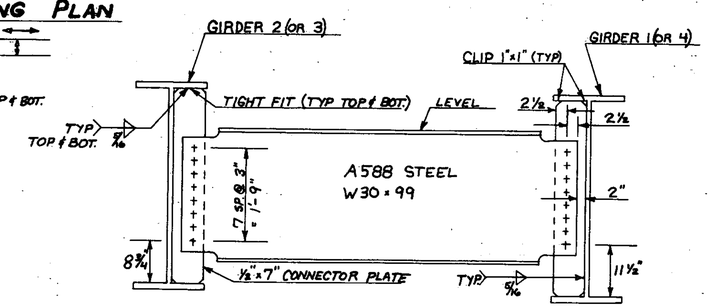

TYPICAL DIAPHRAGM DETAIL

3/4" = 1'-0"

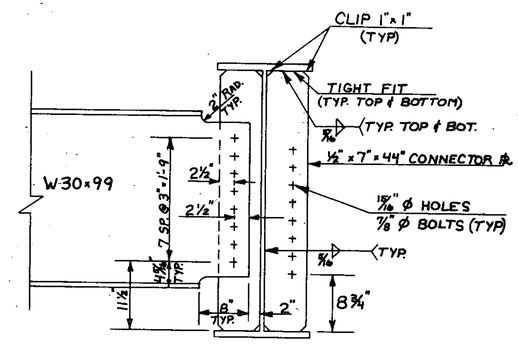

INTERMEDIATE CONNECTOR PLATE

1" = 1'-0"

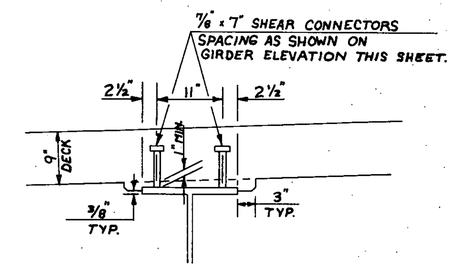

HAUNCH DETAIL

1" = 1'-0"

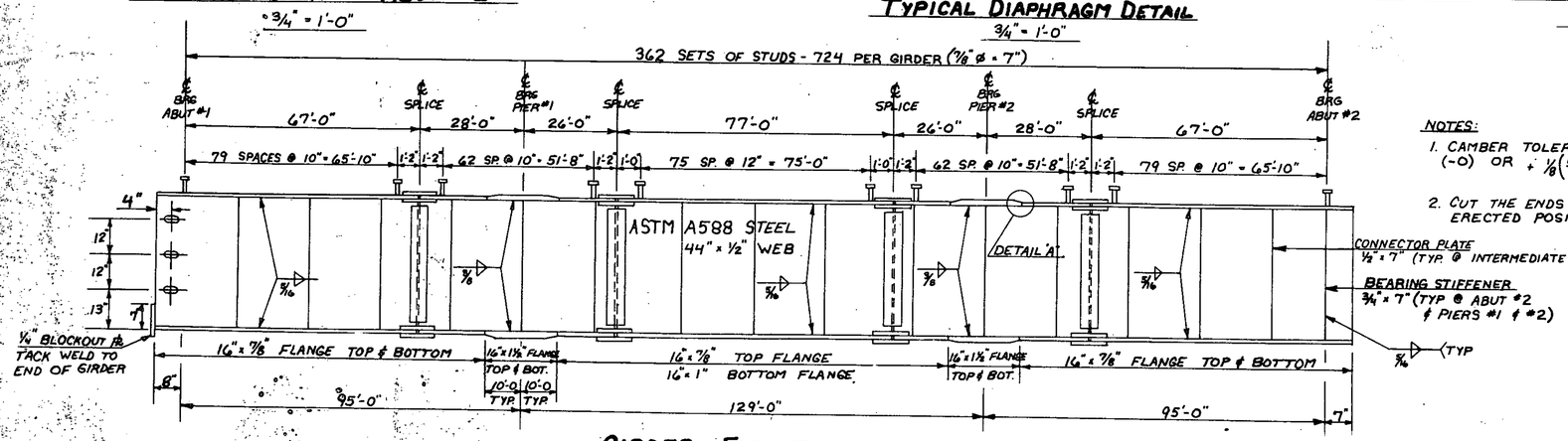

GIRDER ELEVATION

1" = 20'
1" = 2'

NOTES:

1. CAMBER TOLERANCE AT ANY POINT SHALL NOT EXCEED (-0) OR + 1/8 (DISTANCE TO NEAREST SUPPORT / 10)
2. CUT THE ENDS OF THE GIRDER TO BE VERTICAL IN THE ERECTED POSITION.

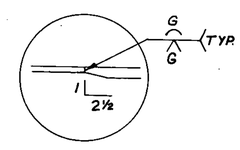

DETAIL "A"

NO SCALE

STATE OF VERMONT
AGENCY OF TRANSPORTATION

Town Of GEORGIA	Bridge No. 10
Highway No. TH #1	Log Sta. — REV. Surv. Sta. 88+15.00
TH #1 OVER LAMOILLE RIVER	
STRUCTURAL STEEL DETAILS	
Designed By CHRIS WILLIAMS	Drawn By CHRIS WILLIAMS
Checked By G.S. ROGERS Date 12/84	Bridge Design Supervisor F.W. Bolkum Date 2/85
PROJECT GEORGIA	PROJECT NO. BRZ 1448(3)
L.G.C. Info.	
Bridge Sheet No.	Sheet 17 of 61

BR-6