Please confirm that the valve box is cast iron.

As Needed

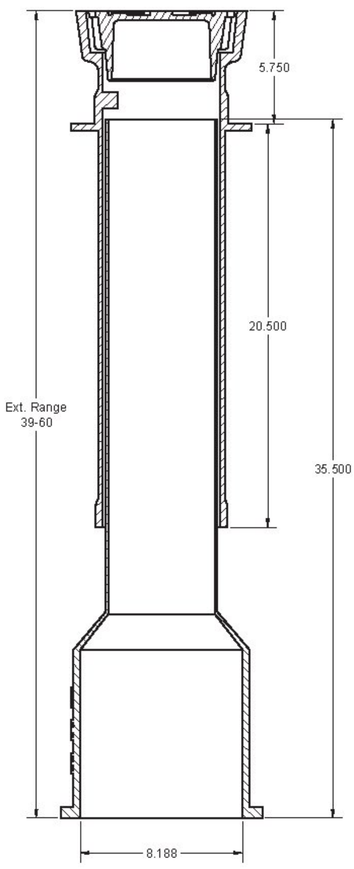

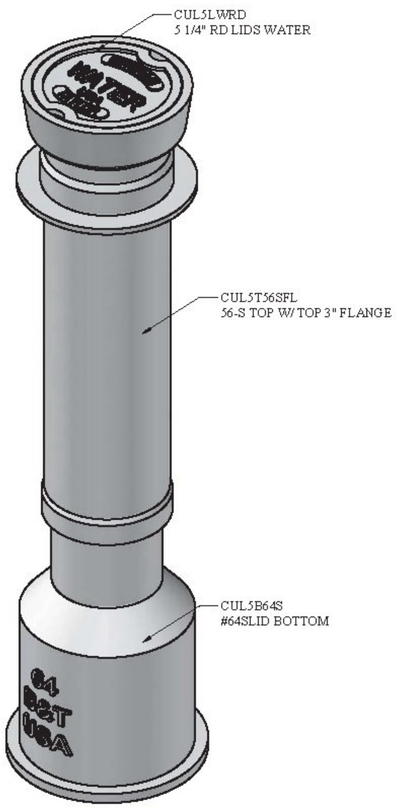

NOTES- ALL EDGES HAVE A 1/16 RADIUS
TOLERANCE ± .0625

REV.	DATE	COMMENT
A		RELEASED

BINGHAM & TAYLOR

I5B5664SWFLUSA

#5664S TOP FLANGE
DOMESTIC-USA VALVE BOX
WATER 39-60 EXT

DRAWN BY: D REED
4/29/14

WEIGHT: 103 lbs

Preliminary