NOTES:
1. REINFORCING STEEL DEFORMED BARS CONFORM TO LATEST ASTM A615, GRADE 60, COVER 3". EPOXY COATED REINFORCING
2. CONCRETE COMPRESSIVE STRENGTH– 5,000 PSI AT 28 DAYS SELF COMPACTING CONCRETE MIX MIX NO. MASS, RIDOT, VT 685 HP. AIR ENTRAINMENT 7% ±2%
3. METHOD OF MANUFACTURE: WET CAST.
4. HEADWALL UNIT SHALL BE RELEASED FROM MOLD WHEN 3,500 PSI MIN IS OBTAINED.
7. TOLERANCE – PER PCI TOLERANCE MANUAL MNL 135–00
8. FINISH – SURFACES TO BE STEEL FORM FINISH AND/OR STEEL TROWEL FINISH.
9. CURING – AFTER STRIPPING STRENGTH IS ACHIEVED, UNIT WILL BE DAMPENED, THEN COMPLETELY WRAPPED WITH POLYETHYLENE SHEETS (PLASTIC) FOR A MINIMUM OF ONE DAYS OR UNTIL DESIGN STRENGTH IS MET.

APPROX. WEIGHT:
HEADWALL – 35,000 LBS

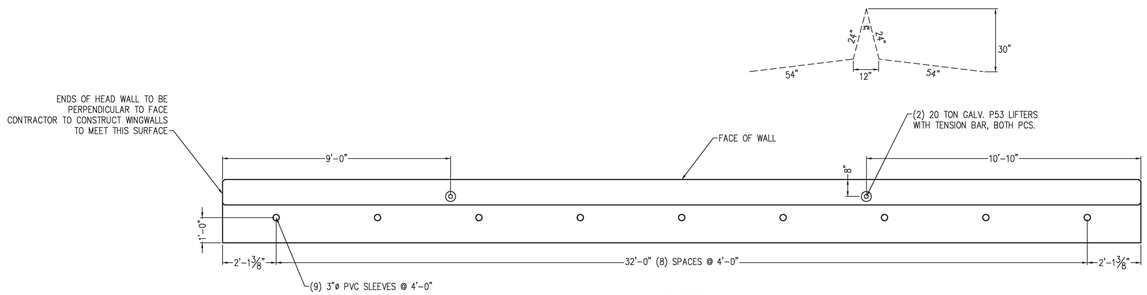

PLAN VIEW
UPSTREAM HEADWALL
(1) REQUIRED

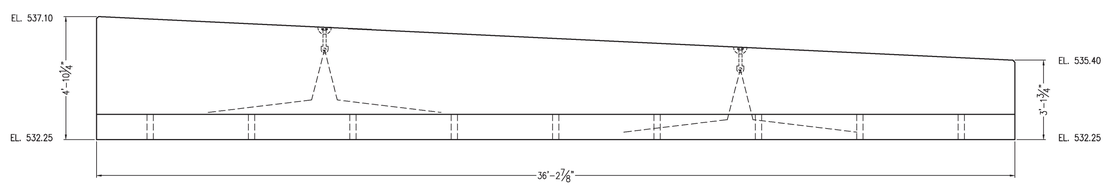

ELEV. VIEW
LOOKING AT BACK OF WALL

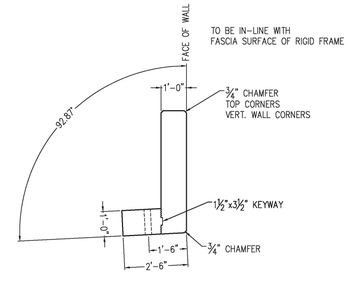

END VIEW

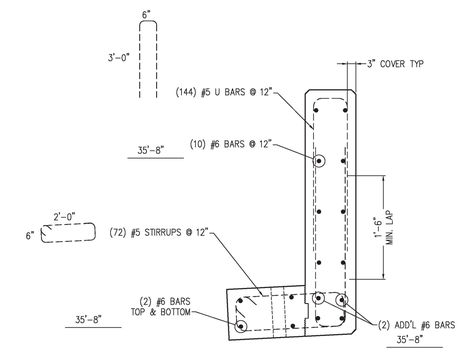

REINFORCING

Approved AsNoted

BY:	R. Young
DATE:	03/07/19
RESUBMIT:	No
RECEIVED:	March 5, 2019
CKD BY:	G. Laroche/G. Dargan/K. Moulton

STATE OF VERMONT
AGENCY OF TRANSPORTATION

EPOXY COATED REINFORCING

UNITED CONCRETE PRODUCTS, Inc. 173 CHURCH STREET YALESVILLE, CT 06492 TEL: (203)-269-3119 FAX: (203)-265-4941	PRECAST CONCRETE UPSTREAM HEADWALL	PROJECT #34491	
	CUSTOMER BUR CONSTRUCTION, LLC	SCALE NONE	
	JOB BRIDGE 0138(12) IMPROVEMENTS	DATE 11/08/18	SHEET B-10
	LOCATION POULTNEY, VT	DRW DH	
	REVISED 3-06-2019 DH	CHK JLT	