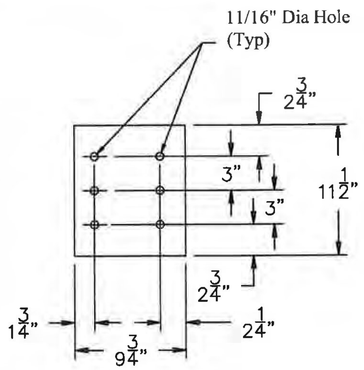

(12) - DETAIL 2p2

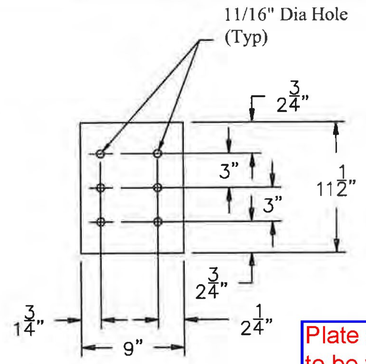

(2) - DETAIL 2p3

Plate dimensions to be verified in field by contractor

Vermont Agency of Transportation
RECEIVED
ON: September 13, 2016
and Checked for
CONFORMANCE
BY: Mark Sargent DATE: 09/13/2016

APPROVED: Approval of drawings and/or procedures indicates concurrence with the information presented and does not relieve the Contractor or Fabricator of compliance with all specifications and code requirements		Stantec
APPROVED AS NOTED	X	
REVISE AND RESUBMIT		
NOT REVIEWED		
Date: 8/23/16		
By: George Bogue		

This review by Stantec Consulting Services Inc. is for the sole purpose of ascertaining conformance with the general design concept. This review shall not mean that Stantec Consulting Services Inc approves the detail design inherent in the shop drawings, responsibility for which shall remain with the Contractor. Submitting same, and such review shall not relieve the Contractor of his responsibility for errors or omissions in the shop drawing or of his responsibility for meeting all requirements of the Contract Documents. The contractor is responsible for dimensions to be confirmed and correlated at the job site, for information that pertains solely to the fabrication processes or to techniques of construction and installation and for coordination of the work of all subtrades.

BILL OF MATERIALS

QTY	MARK	SHAPE	LENGTH	REMARKS
12	2A1	ANCHOR ASSEMBLY		
12	2p1	Plate 7/8 x 6	1'-4"	
24		7/8" Threaded Anchor Rod x 12" lg with Nut and Washer		
24		7/8" Threaded Rod x 8" lg with 3 Nuts and 2 Washers		
14	2B1	BASE ASSEMBLY		
28	2a2	L 4 x 3 x 1/4	0'-11 1/2"	
14	2p2	Plate 1/4 x 9 3/4	0'-11 1/2"	
140		5/8" Bolt x 2" Lg with Washer & Nut		
2	2B2	BASE ASSEMBLY		
4	2a2	L 4 x 3 x 1/4	0'-11 1/2"	
2	2p3	Plate 1/4 x 9	0'-11 1/2"	
20		5/8" Bolt x 2" Lg with Washer & Nut		

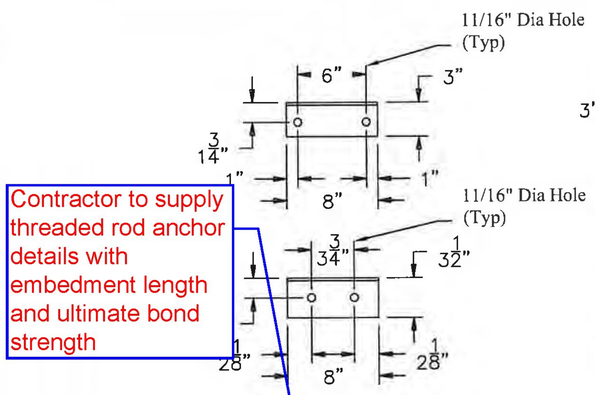

(16) - DETAIL 2a4

Contractor to supply threaded rod anchor details with embedment length and ultimate bond strength

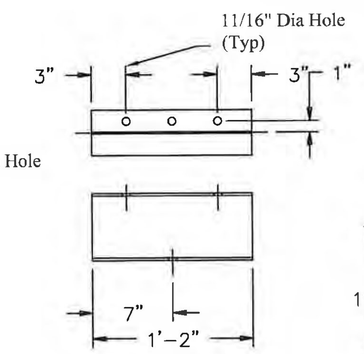

(16) - DETAIL 2w1

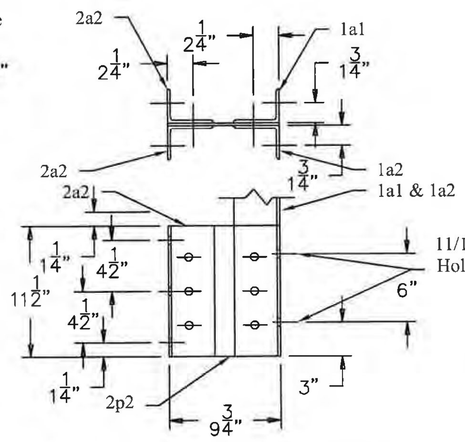

(14) - BASE ASSEMBLY 2B1

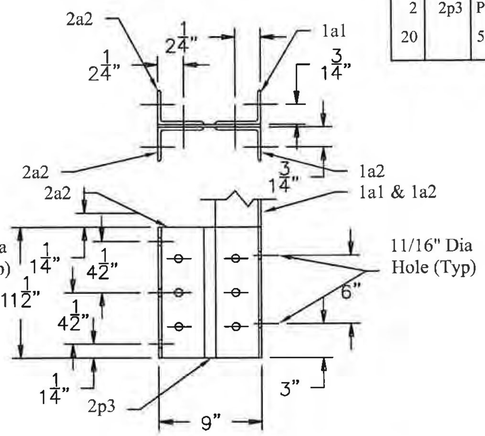

(2) - BASE ASSEMBLY 2B2

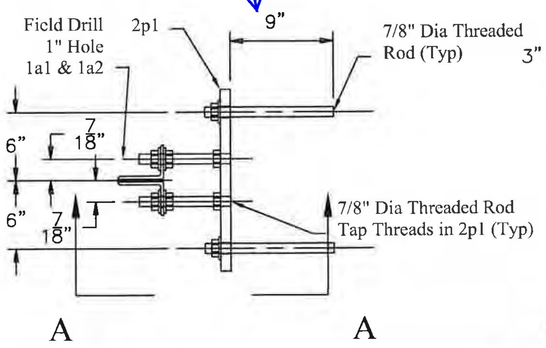

(12) - 2A1 - BRIDGE POST ANCHOR ASSY

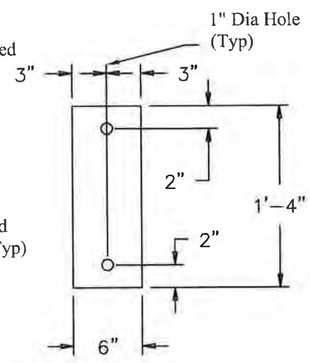

(12) - DETAIL 2p1
(Anchor Plate)

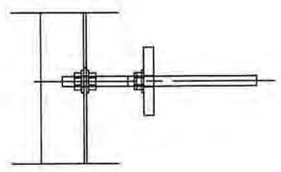

SECTION A-A

REV NO.	DATE	DESCRIPTION
		DATE SUBMITTED
0	8-10-2016	SUBMITTED FOR APPROVAL

HOLES AS NOTED
MATERIAL: AASHTO M 270 GRADE 36 PAINTED

DRAWING COVERS
BRIDGE RAIL ASSEMBLY

PROJECT	MORRISTOWN BF 0239(3)
LOCATION	CADYS FALLS ROAD over LAMOILLE RIVER
ENGINEER	VERMONT AGENCY OF TRANSPORTATION
CUSTOMER	BLOW & COTE, INC.

MERRIMACK SHEET METAL
119 HALL STREET
CONCORD NH 03301
Tel. 603.224.7766
Fax 603.224.7925

DRAWN BY: RL
CHECKED BY: JD
JOB NO: #6669
DWG: F2R