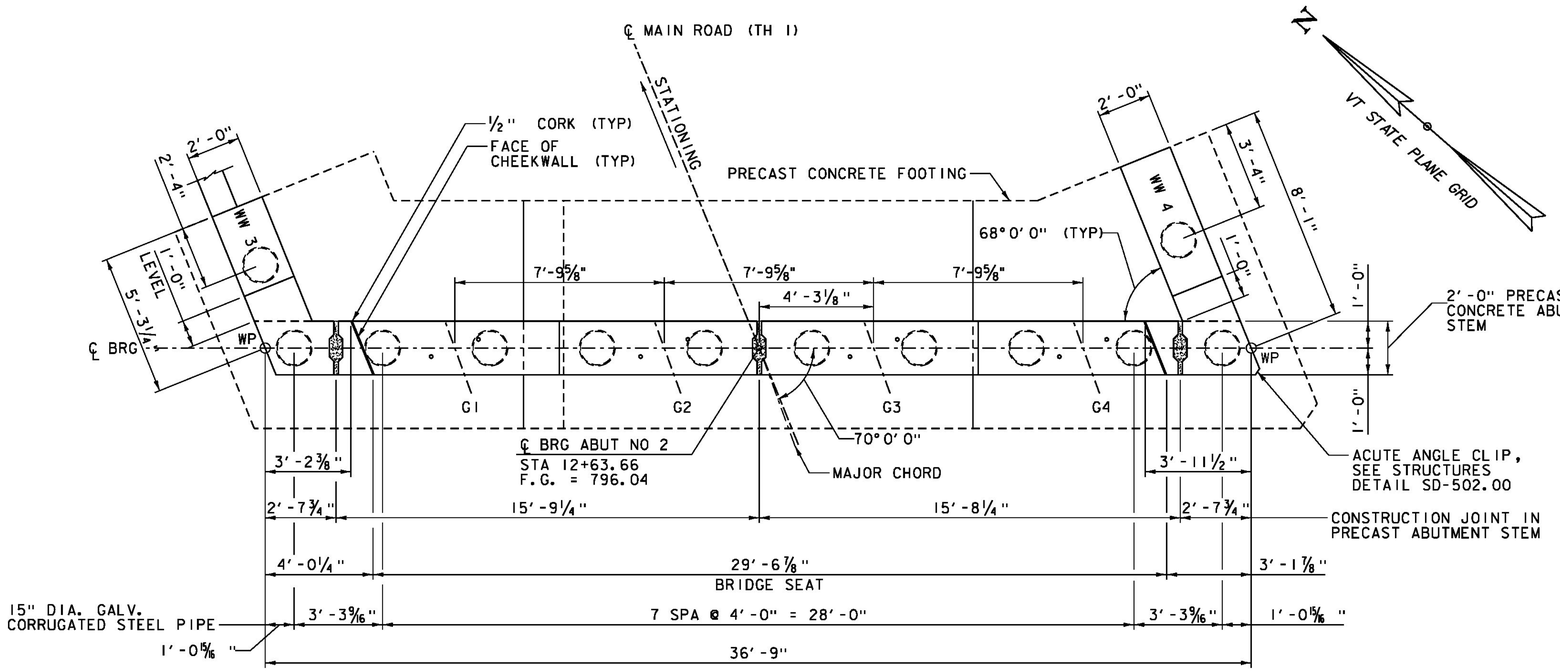

ABUTMENT NO 2 PLAN

SCALE ⅜"=1'-0"

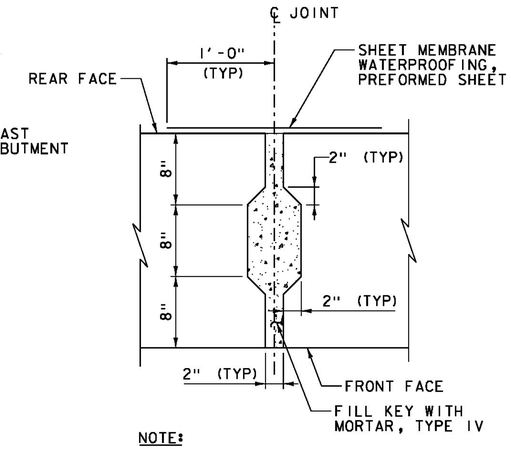

NOTE:
CONTRACTOR TO FORM JOINT TO SUPPORT WET GROUT

ABUTMENT SHEAR KEY PLAN VIEW

SCALE 1½"=1'-0"

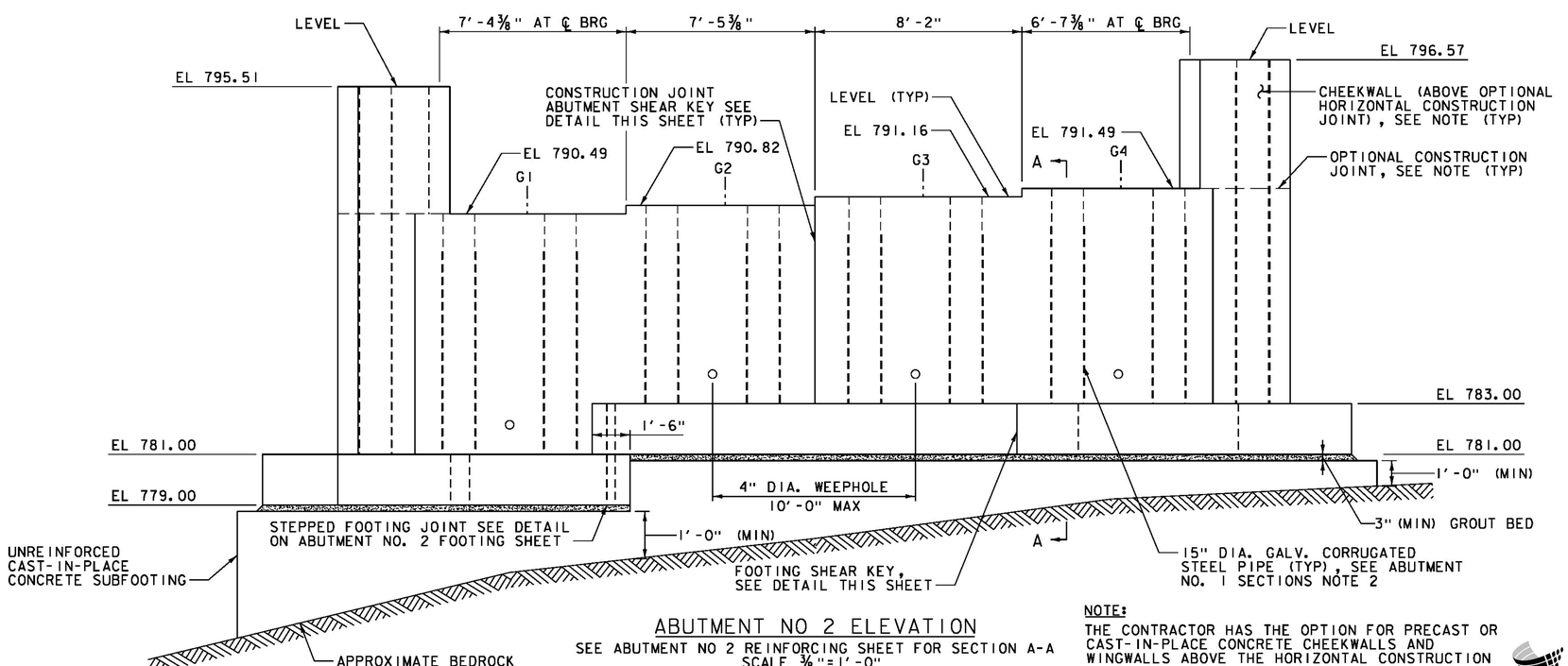

ABUTMENT NO 2 ELEVATION

SEE ABUTMENT NO 2 REINFORCING SHEET FOR SECTION A-A
SCALE ⅜"=1'-0"

NOTE:
THE CONTRACTOR HAS THE OPTION FOR PRECAST OR CAST-IN-PLACE CONCRETE CHEEKWALLS AND WINGWALLS ABOVE THE HORIZONTAL CONSTRUCTION JOINT (IF USED). PAYMENT WILL BE INCLUDED UNDER THE APPROPRIATE PRECAST CONCRETE ITEM. SEE PROJECT NOTES FOR DETAILS.

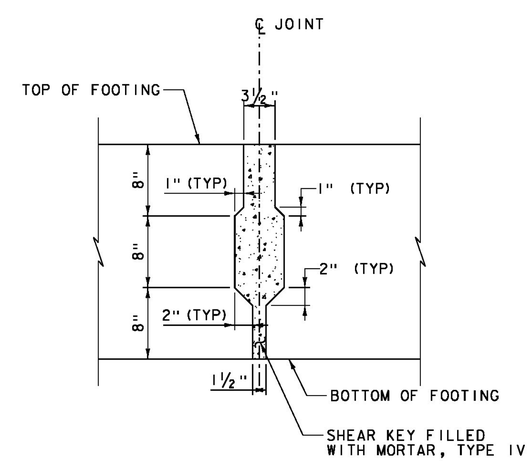

NOTE:
CONTRACTOR TO DESIGN FORM JOINT TO RETAIN KEY GROUT ON BOTH FACES OF THE ELEMENT

FOOTING SHEAR KEY ELEVATION VIEW

SCALE 1½"=1'-0"

PROJECT NAME: HUNTINGTON	
PROJECT NUMBER: BF 021I(32)	
FILE NAME: z13J080sub2.dgn	PLOT DATE: 8/15/2016
PROJECT LEADER: S.E. BURBANK	DRAWN BY: J.D. KEENER
DESIGNED BY: R.H. BARNES	CHECKED BY: R.H. BARNES
ABUTMENT NO 2 PLAN & ELEVATION	SHEET 40 OF 62

VHB 57737.00