* INDICATES DIMENSION AT 68°F, SEE CHART ON SHEET BR 417 FOR TEMPERATURE ADJUSTMENT

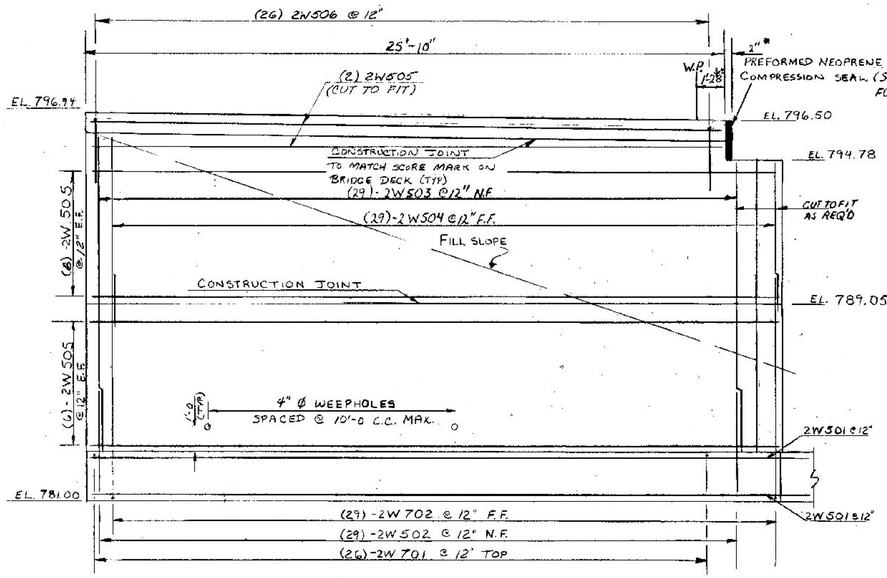

WINGWALL NO. 2
SCALE: 3/8" = 1'-0

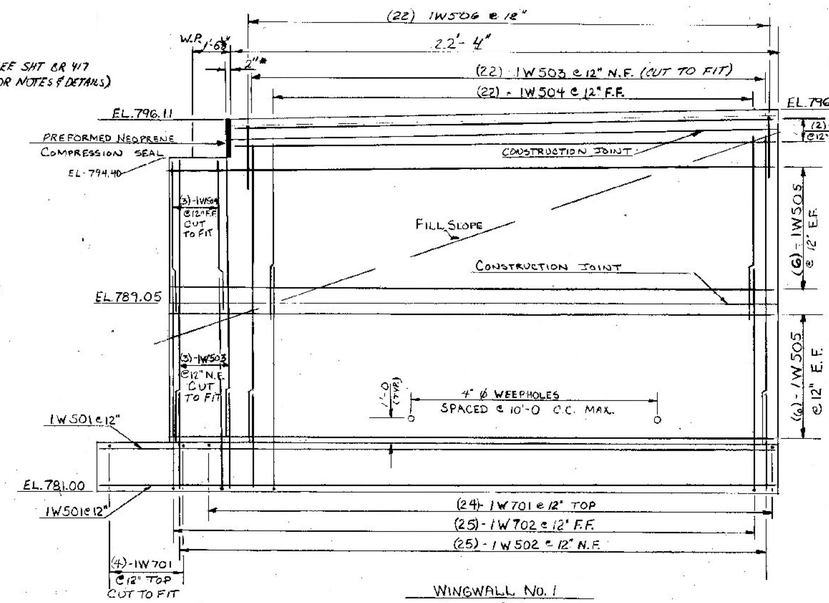

WINGWALL NO. 1
SCALE: 3/8" = 1'-0

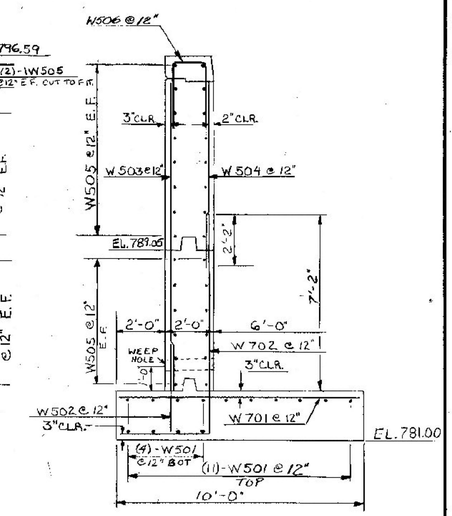

TYPICAL SECTION WINGWALLS No. 1 & No. 2
SCALE: 3/8" = 1'-0

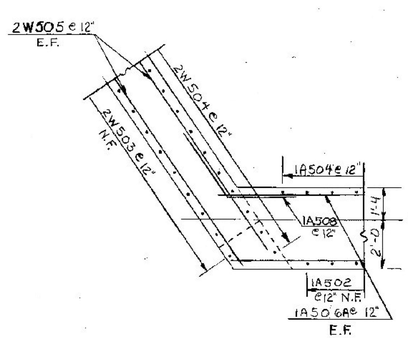

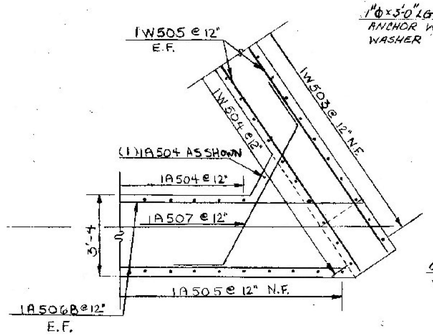

CORNER DETAILS
SCALE: 3/8" = 1'-0

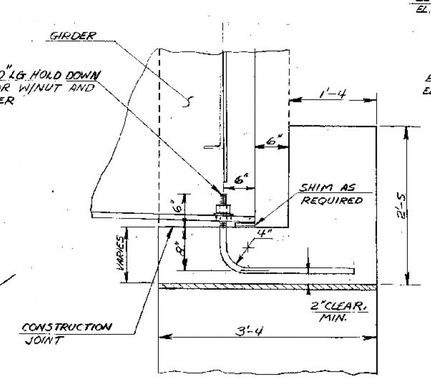

SECTION A-A
SCALE: 1" = 1'-0

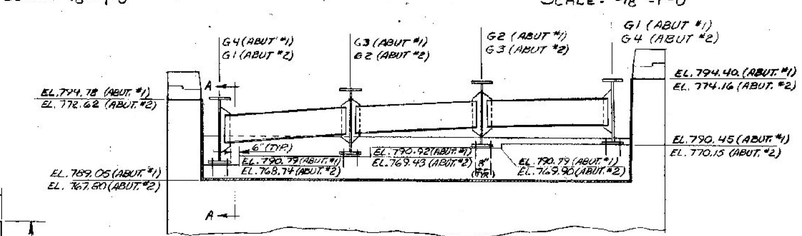

DETAIL AT END OF BEAMS, ABUT #2
(ABUT #1 ELEVATIONS SHOWN)
SCALE: 1" = 4'

NOTES

1. SEE SHT. BR409 FOR CONSTRUCTION SEQUENCE.
2. SEE SHT. BR405 FOR COMPLETE END OF BRIDGE DETAILS.

CASTLETON-RUTLAND
BF MEMB (37)
SHEET 25 OF 28
BRIDGE NO. D18
FOR REFERENCE ONLY

STATE OF VERMONT
AGENCY OF TRANSPORTATION

TOWN OF RUTLAND	Bridge No. 4 / Log Sta.
HIGHWAY NO. T.H. 22	Surv. Sta. ℄ 887+80±
T.H. 22 OVER U.S. 4, EB & WB	
WINGWALL 1 AND 2 DETAILS	
Designed by D. BURLEY	Drawn by M. EVANS 6/83
Checked by D. BURLEY date 7-83	Bridge Design Supervisor E.L. Costley date 9-83
PROJECT W. RUTLAND - RUTLAND	PROJECT NO. F020-1(10)
Bridge Sheet No. BR 414	Sheet 201 of 457

BR-6