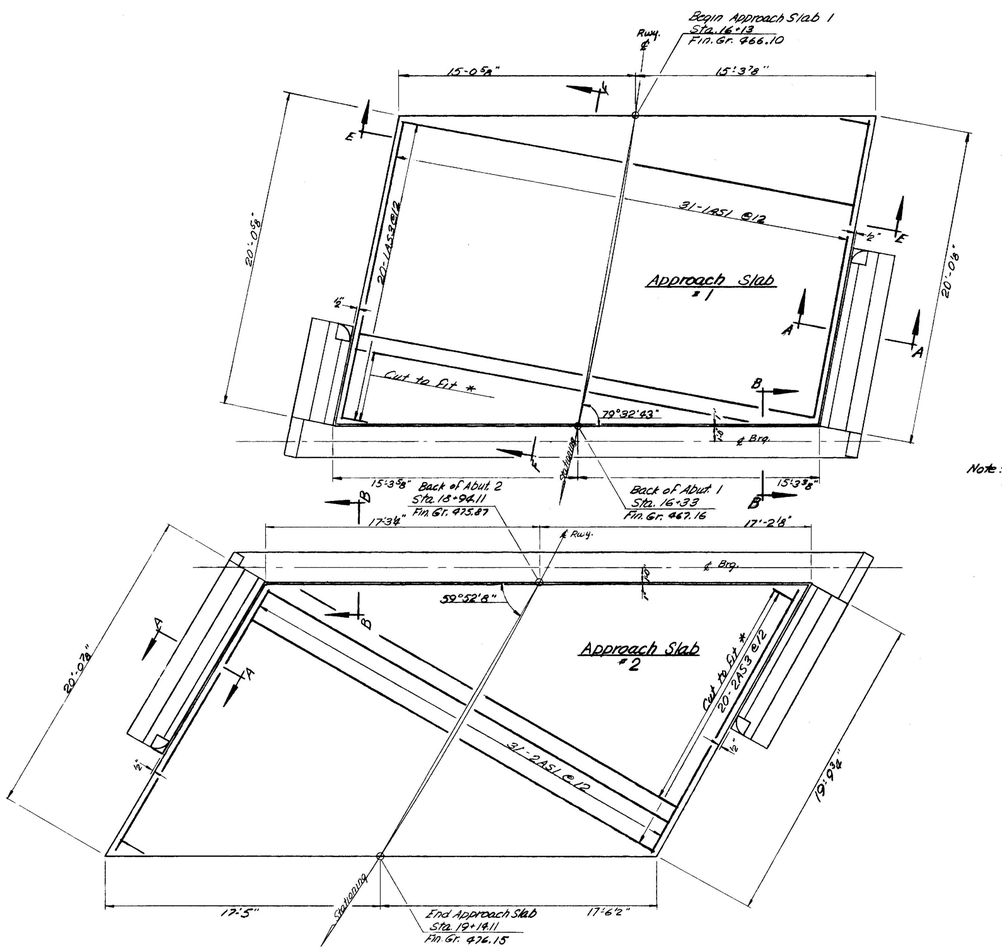


PLAN

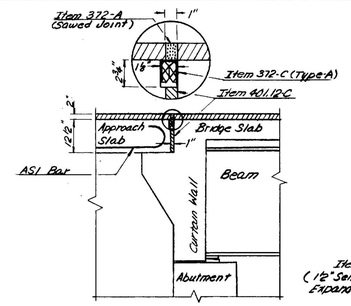


SECTION B-B

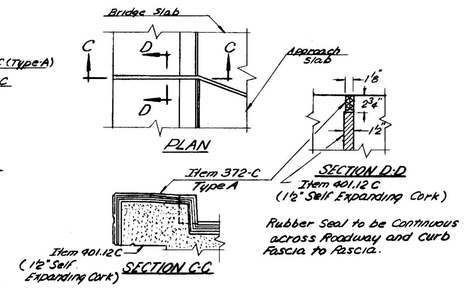


Rubber Seal to be Continuous across Roadway and Curb Fascia to Fascia.

CURB JOINT DETAIL

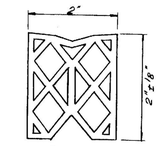

TYPE A

Details - Item 372-C Joint Sealer - Preformed Material to be Premolded Neoprene Rubber (Other Configurations that satisfy specifications may be used.)

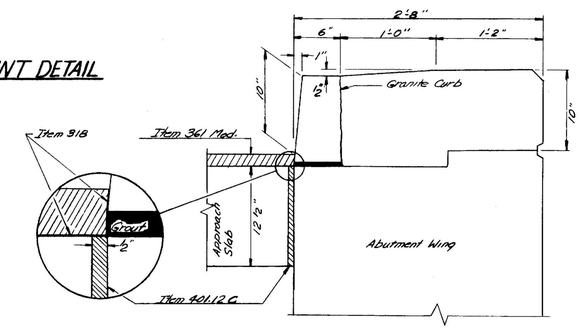


SECTION A-A

Note: For wing wall details see abutment details.

* indicates cut off portion of reinforcing to be used in the opposite end.

AS1 indicates #10 Bar.

AS3 indicates #5 Bar.

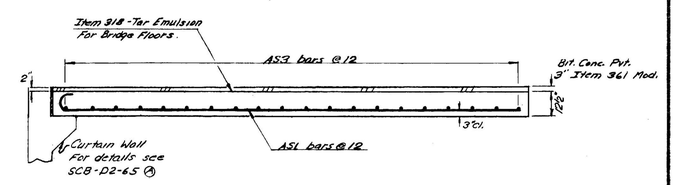


SECTION FF

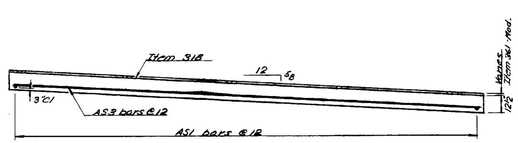


SECTION E-E

CASTLETON-RUTLAND
BF MEMB (37)
SHEET 21 OF 28
BRIDGE NO. 2
FOR REFERENCE ONLY

STATE OF VERMONT
DEPARTMENT OF HIGHWAYS

PROJECT CASTLETON-IRA
TOWN OF CASTLETON
ROUTE NO. U.S. #4 LOG STA. 391+00
APPROACH SLAB #1 & #2 DETAILS
S.A. #3 OVER U.S. RTE. #4
SCALE NOT TO SCALE
IN CHARGE R.L. MERCHANT
DRAWN BY C.O. BRYAN CHECKED BY R.E. Pariseault
PROJECT NO. BP 020-1(4)
SHEET 67 OF 301

BR 110

BR-8