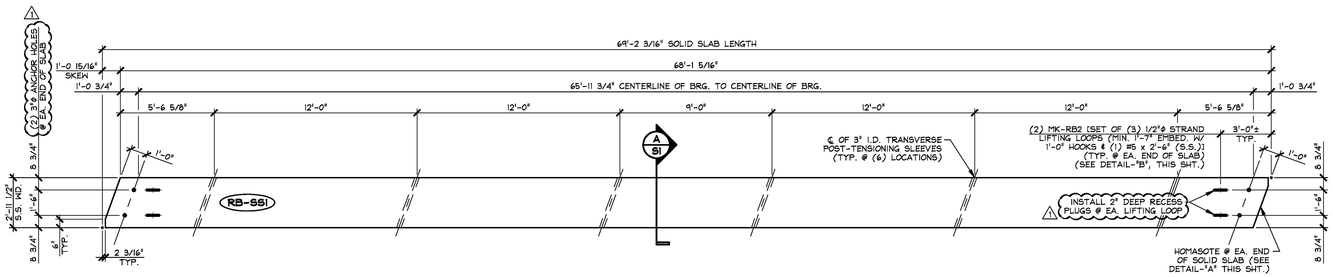

1/SI DIMENSIONAL PLAN VIEW IN FORM
1/4" = 1'-0"

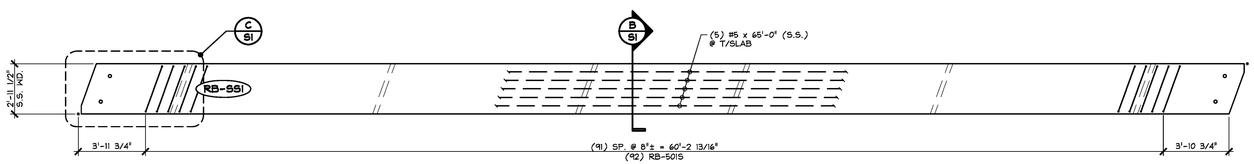

2/SI REINFORCING PLAN VIEW IN FORM
1/4" = 1'-0"

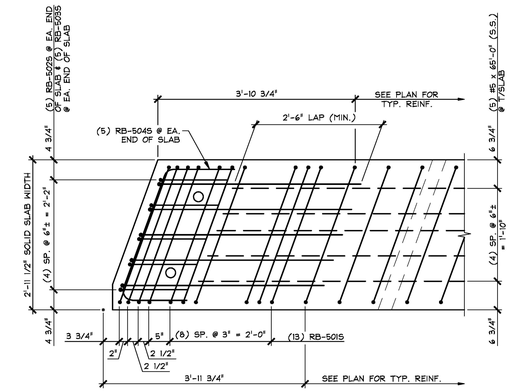

C/SI END BLOCK REINFORCING PLAN
3/4" = 1'-0"

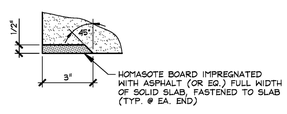

DETAIL - "A"
3" = 1'-0"

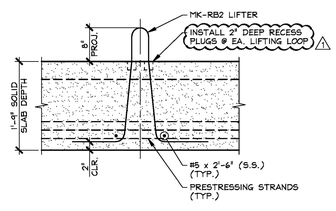

DETAIL - "B"
3/4" = 1'-0"

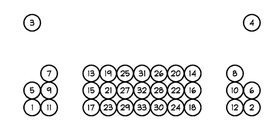

DETENSIONING SCHECULE
N.T.S.

SHOP NOTE:
28-DAY STRENGTH = 9,000 PSI
STRESS TRANSFER STRENGTH = 6,000 PSI
DESIGN MIX #430M NO-DCI 1

MARK: RB-SS1	QTY.: 6	WT.: 25.65 T	VOL.: 12.67 cy

MATERIAL LIST / SOLID SLAB

ITEM	MARK	DESCRIPTION	QTY.
1	RB-5015	#5 BENT BAR (STAINLESS STEEL)	118
2	RB-5025	#5 BENT BAR (STAINLESS STEEL)	10
3	RB-5035	#5 BENT BAR (STAINLESS STEEL)	10
4	RB-5045	#5 BENT BAR (STAINLESS STEEL)	10
5		#5 x 65'-0" (STAINLESS STEEL)	5
6		#5 x 2'-6" (STAINLESS STEEL)	4
7			
8			
9	MK-RB2	SET OF (3) 1/2"ϕ STRAND LIFTING LOOPS	4
10			

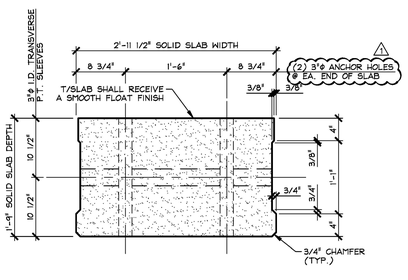

A/SI DIMENSIONAL SECTION
1" = 1'-0"

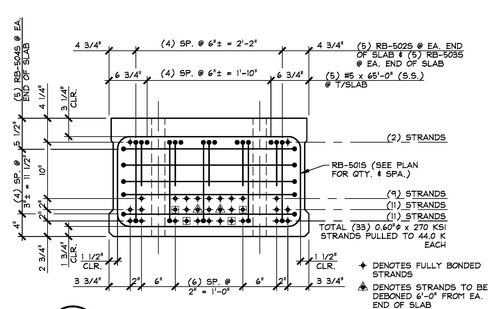

B/SI REINFORCING SECTION
1" = 1'-0"

T.Y. LIN INTERNATIONAL
THE STAMPED DOCUMENTS ARE HEREBY:
x APPROVED
___ APPROVED AS NOTED
___ REVISE AND RESUBMIT
SEE TRANSMITTAL FOR ADDITIONAL INFORMATION AS APPLICABLE.
THIS REVIEW IS FOR GENERAL CONFORMANCE WITH DESIGN CONCEPT ONLY. ANY DEVIATION FROM THE PLANS OR SPECIFICATIONS NOT CLEARLY NOTED BY THE CONTRACTOR HAS NOT BEEN REVIEWED. REVIEW BY THE ENGINEER SHALL NOT RELIEVE THE CONTRACTOR OF THE CONTRACTUAL RESPONSIBILITY FOR ANY ERRORS OR DEVIATION FROM THE CONTRACT REQUIREMENTS.
JOSH OLUND — REVIEWER
January 25, 2017 — DATE

1 1-3-17 REVISED AS NOTED

Vermont Agency of Transportation
RECEIVED
CK'D BY T.Y. Lin International OK'D BY J. Olund
January 24, 2017
RESUBMIT No Approved
BY D. Bonneau DATE 01/25/17

APPROVAL STAMP:

J.P. CARRARA & SONS INC.
Precast & Prestress Manufacturer
2464 CASE STR., MIDDLEBURY, VERMONT 05753 Phone:(802)388-6361 Fax:(802)388-9010

J.P. SICARD, INC.
CONTRACTOR
BARTON, VERMONT

STATE OF VERMONT AGENCY OF TRANSPORTATION
COUNTY OF ORLEANS

DATE: NOV. 18, 2016
SCALE: NOTED

VILLAGE OF BARTON
TH 4 (ROARING BROOK RD.), RURAL MINOR COLLECTOR
BRIDGE NO.: 58 PROJECT NO.: BO 1449(33)

CHKD: A.S. DFTM: B.L.
JOB NO: 23498-016

PRESTRESSED SOLID SLAB DETAILS

DWG. NO: S1
ROARING BROOK RD.

F:\VT-Bridges\23498-16 Barton\Roaring Brook\Roaring-S1.dwg, 1/4/2017 4:28:40 PM