SPLICE BAR - FIXED

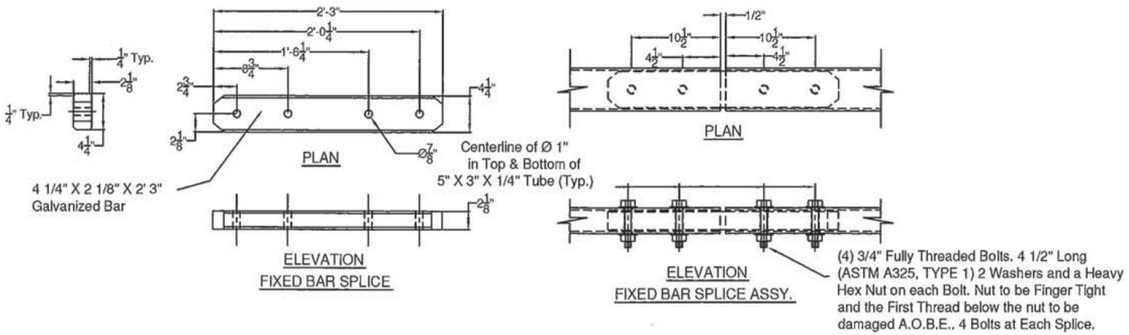

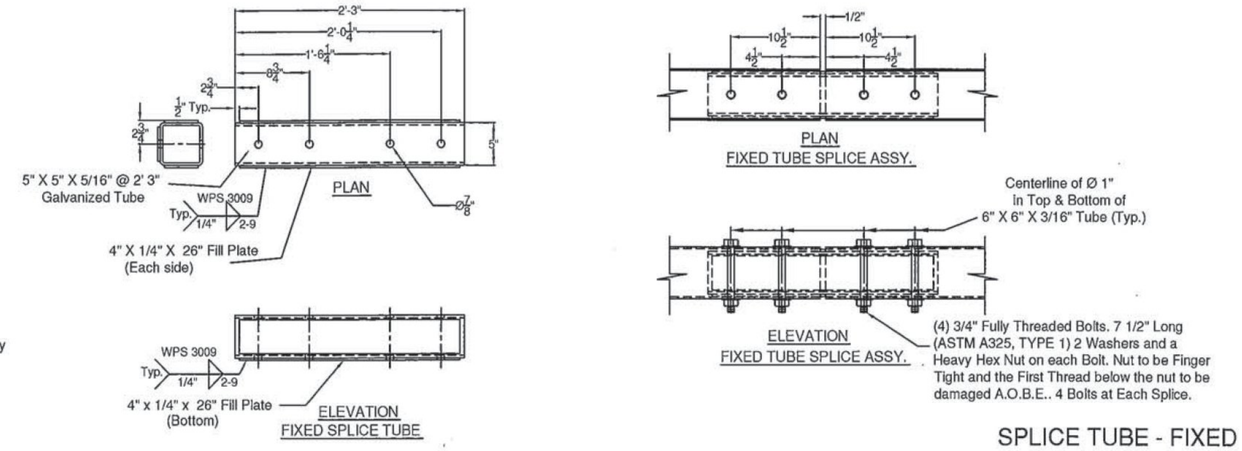

SPLICE TUBE - FIXED

Vermont Agency of Transportation
RECEIVED
Cambridge Bridge Rail approved 1-8-2015jdf
CK'D BY GL OK'D BY JS
January 8, 2015
RESUBMIT NO Approved
BY KH DATE 1-8-2015

BRIDGE POST DETAIL

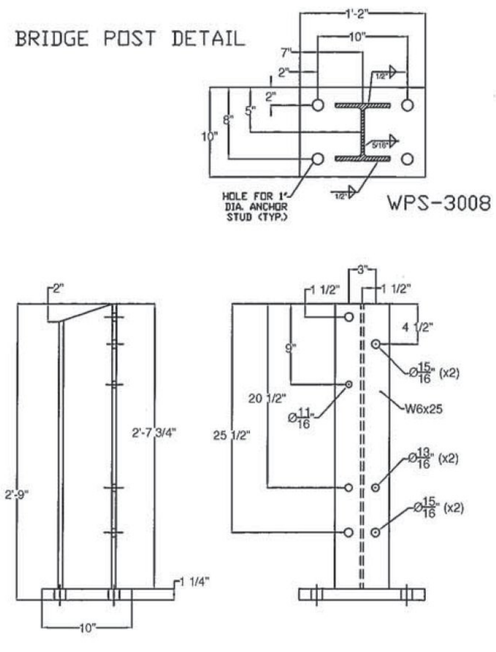

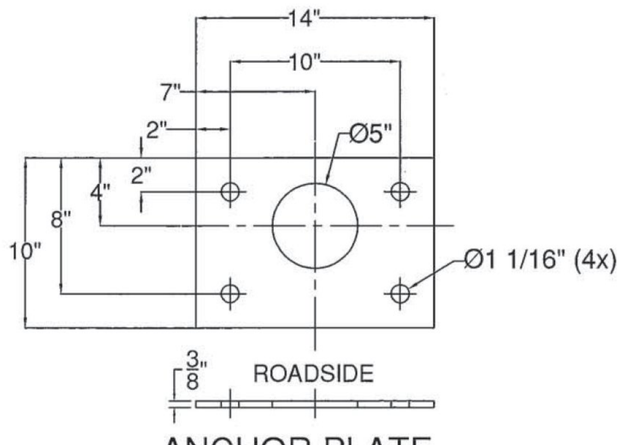

ANCHOR PLATE

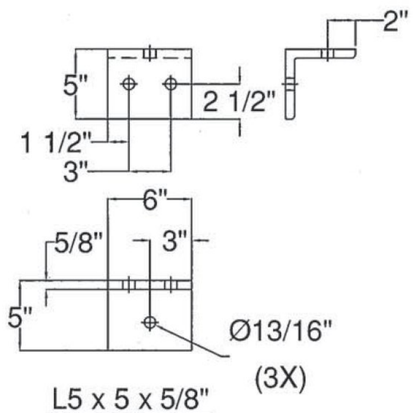

L5 x 5 x 5/8" RAILING ANGLE

SLOTTED ROUND HEAD BOLT

ITEM #: 525.335

SHEET 2 OF 2

STRUCTURAL STEEL TO COMPLY W/ ASTM A6

TOLERANCE UNLESS OTHERWISE NOTED:
FRACTIONS = ± 1/16"
ANGLES = ± 1/2°
DIAMETERS = ± 1/32"

BRIDGE RAIL DETAILS SHEET

TOWN HIGHWAY 46 (IRISH SETTLEMENT ROAD), BRIDGE # 28
TOWN OF CAMBRIDGE, COUNTY OF LAMOILLE, VT.

REV	NO.	DATE	DESCRIPTION	BY	REV	NO.	DATE	DESCRIPTION	BY
	1	1/7/15	Revised Per 12/19/14 Markup	E.P.					

ELDERLEE, INC.
OAKS CORNERS, NEW YORK 14518
E-Mail: dlong@elderlee.com, epeek@elderlee.com
Tel: 315-789-6670 Fax: 315-789-6615

AISC CERTIFIED FABRICATOR

DRAWN	E.P.	11/21/14
CHECKED	D.L.	11/21/14
APPROVED		
SCALE	SCHEMATIC	
DRAWING NO.	F.R. LaFAYETTE-CAMBRIDGE	