STATE OF VERMONT
AGENCY OF TRANSPORTATION

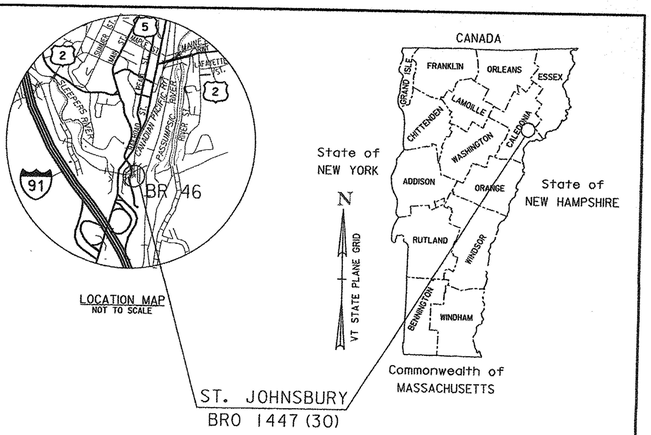

PROPOSED IMPROVEMENT
BRIDGE PROJECT

TOWN OF ST. JOHNSBURY
COUNTY OF CALEDONIA
TH 371, RURAL LOCAL ROAD, CLASS 3 TOWN HIGHWAY
BRIDGE NUMBER 46

PROJECT LOCATION: THE PROJECT IS LOCATED ON TH 371 (MAIN STREET), APPROXIMATELY 0.1 MILES SOUTH OF JUNCTION WITH US ROUTE 5

PROJECT DESCRIPTION: DEMOLITION OF EXISTING BRIDGE, AND REPLACEMENT WITH A NEW SINGLE SPAN STEEL BEAM BRIDGE ON THE EXISTING ALIGNMENT, WITH ASSOCIATED ROADWAY AND CHANNEL WORK.

LENGTH OF STRUCTURE:	112.02 FEET
LENGTH OF ROADWAY:	112.98 FEET
LENGTH OF PROJECT:	225.00 FEET

RECORD PLANS

CONTRACTOR: WINTERSET, INC. – LYNDONVILLE, VT

RESIDENT ENGINEER: JAY STRONG

CONSTRUCTION BEGAN: APRIL 18, 2017

CONSTRUCTION COMPLETE: MAY 18, 2018

RECORD PLANS BY: JAY STRONG & JESSE IVES

I HEREBY CERTIFY THAT ALL THE CONSTRUCTION REQUIRED BY THIS SET OF DRAWINGS HAS BEEN ACCOMPLISHED AS INDICATED HEREIN.

BY _____ RESIDENT ENGINEER

DATE 10/10/2018

NOTE: Any further information concerning final quantities, amounts or other details relative to this project may be found at Central Files in the electronic archives.

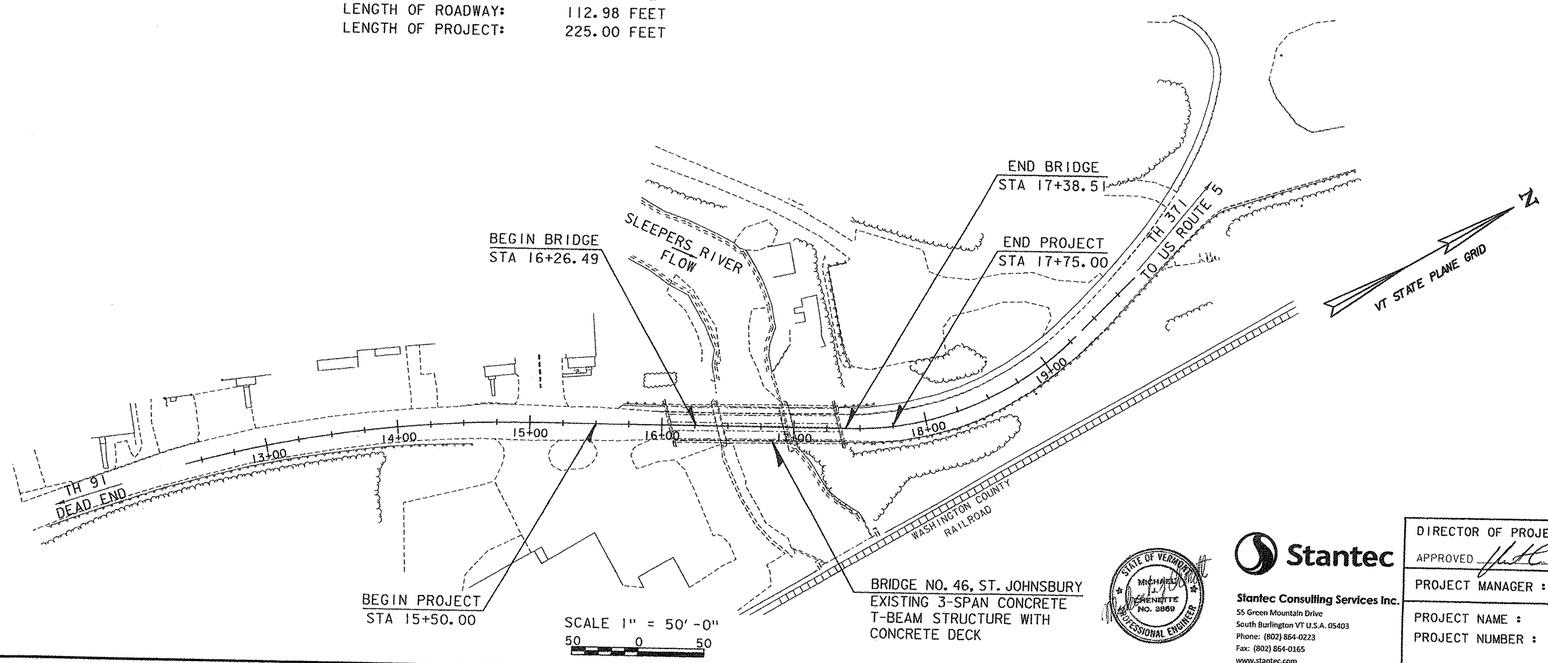

CONSTRUCTION IS TO BE CARRIED ON IN ACCORDANCE WITH THESE PLANS AND THE STANDARD SPECIFICATIONS FOR CONSTRUCTION DATED 2011, AS APPROVED BY THE FEDERAL HIGHWAY ADMINISTRATION ON JULY 20, 2011 FOR USE ON THIS PROJECT, INCLUDING ALL SUBSEQUENT REVISIONS AND SUCH REVISED SPECIFICATIONS AND SPECIAL PROVISIONS AS ARE INCORPORATED IN THESE PLANS.

QUALITY ASSURANCE PROGRAM : LEVEL 2	
SURVEYED BY :	L. ORVIS
SURVEYED DATE :	5/16/2012
DATUM	
VERTICAL	NAVD88
HORIZONTAL	NAD 83 (96)

STATE OF VERMONT — MICHAEL J. LAFAYETTE NO. 3869 — PROFESSIONAL ENGINEER

Stantec

Stantec Consulting Services Inc.
55 Green Mountain Drive
South Burlington VT U.S.A. 05403
Phone: (802) 864-0223
Fax: (802) 864-0165
www.stantec.com

DIRECTOR OF PROJECT DELIVERY
APPROVED _____ DATE 8/25/2016

PROJECT MANAGER : WENDY PELLETIER, P.E.

PROJECT NAME : ST. JOHNSBURY
PROJECT NUMBER : BRO 1447 (30)

SHEET 1 OF 76 SHEETS

STATE OF VERMONT
AGENCY OF TRANSPORTATION

PRELIMINARY INFORMATION SHEET (BRIDGE)

Version
LRFD

INDEX OF SHEETS

PLAN SHEETS

1	TITLE SHEET
2	PRELIMINARY INFORMATION SHEET
3	TYPICAL SECTIONS - TYP 1
4	TYPICAL SECTIONS - TYP 2
5	PROJECT NOTES
6 - 8	ROADWAY QUANTITY SHEETS 1-3
9	BRIDGE QUANTITY SHEET
10	CONVENTIONAL SYMBOLOGY LEGEND
11	TIE SHEET
12	PLAN LAYOUT SHEET
13	PROFILE SHEET AND BANKING DIAGRAM
14	UTILITY PROFILE
15	TRAFFIC CONTROL PLAN
16	CONSTRUCTION APPROACH SIGNING
17	TEMPORARY UTILITY PLAN
18	UTILITY PLAN
19	SIGNING & PAVEMENT MARKINGS PLAN
20	TRAFFIC SIGN SUMMARY SHEET
21	BORING PLAN
22 - 26	BORING LOG SHEETS 1-5
27	PLAN AND ELEVATION
28	DECK REINFORCING SECTION
29	DECK REINFORCING PLAN
30	FRAMING PLAN
31	STEEL DETAILS
32	BRIDGE END DETAILS
33	APPROACH SLAB DETAILS
34	ABUTMENT 1 PLAN & ELEVATION
35	ABUTMENT 2 PLAN & ELEVATION
36	WINGWALLS
37	REINFORCING STEEL SCHEDULE SHEET #1
38 - 41	ROADWAY CROSS SECTIONS 1-4
42 - 44	CHANNEL CROSS SECTIONS 1-3
45	EPSC NARRATIVE
46	EPSC EXISTING CONDITIONS SITE PLAN
47	EPSC CONSTRUCTION SITE PLAN
48	EPSC FINAL SITE PLAN
49	EPSC DETAILS 1
50	EPSC DETAILS 2
51	EPSC DETAILS 3
52	IMPACTS PLAN
53 - 57	WATER DETAILS 1-5
58	R.O.W. DETAIL SHEET #1
59	ROW LAYOUT SHEET 1 OF 1
60 - 76	REFERENCE PLANS 60-76 "Gas Plant Bridge"

STANDARDS LIST

B-71	STANDARD FOR RESIDENTIAL AND COMMERCIAL DRIVES	07-08-2005
C-10	CURBING	02-11-2008
D-1	PRECAST REINFORCED CONCRETE DROP INLET DETAILS	06-01-1994
D-3	TREATED GUTTERS	06-01-1994
D-9	REINFORCED CONCRETE DROP INLET WITH VERTICAL CURB & THROAT ADAPTER	06-01-1994
D-11	STEEL OR IRON GRATES & COVERS (TYPE A)	06-01-1994
E-171A	TRAFFIC CONTROL SIGNALS GENERAL NOTES & DETAILS	08-09-1995
E-193	PAVEMENT MARKING DETAILS	08-18-1995
G-1	STEEL BEAM GUARDRAIL DETAILS	11-10-2015
G-1D	STEEL BEAM GUARDRAIL APPROACH TERMINAL DETAILS	02-10-2014
J-3	MAIL BOX SUPPORT DETAILS	08-07-1995
S-352A	BRIDGE RAILING, GALVANIZED STEEL TUBING/CONC. COMBINATION	08-22-2012
S-352B	BRIDGE RAILING, GALVANIZED STEEL TUBING/CONC. COMBINATION	08-22-2012
S-352C	BRIDGE RAILING, GALVANIZED STEEL TUBING/CONC. COMBINATION	08-22-2012
S-352D	GUARDRAIL APPROACH SECTION TO CONC. COMBINATION BRIDGE RAILING, TL-3	08-22-2012
S-363	THRIE BEAM TO STANDARD STEEL BEAM TRANSITION SECTION	04-23-2012
T-1	TRAFFIC CONTROL GENERAL NOTES	04-25-2016
T-10	CONVENTIONAL ROADS AND CONSTRUCTION APPROACH SIGNING	08-06-2012
T-28	CONSTRUCTION SIGN DETAILS	08-06-2012
T-30	CONSTRUCTION SIGN DETAILS	08-06-2012
T-35	CONSTRUCTION ZONE LONGITUDINAL DROP-OFFS	08-06-2012
T-36	CONSTRUCTION ZONE LONGITUDINAL DROP-OFFS FOR PAVING	08-06-2012
T-42	BRIDGE NUMBER PLAQUE	04-09-2014
T-45	SQUARE TUBE SIGN POST AND ANCHOR	01-02-2013

STRUCTURES DETAIL SHEETS

SD-501.00	CONCRETE DETAILS AND NOTES	02-09-2012
SD-502.00	CONCRETE DETAILS AND NOTES	10-10-2012
SD-516.10	BRIDGE JOINT ASPHALTIC PLUG	08-29-2011
SD-601.00	STRUCTURAL STEEL DETAILS AND NOTES	06-04-2010
SD-602.00	STRUCTURAL STEEL PLATE GIRDER DETAILS AND NOTES	05-02-2011

HIGHWAY SAFETY & DESIGN DETAIL SHEETS

HSD-400.01	SAFETY EDGE DETAILS	03-29-2016
HSD-621.06	GUARDRAIL TERMINAL LABEL DETAIL	11-03-2015

FINAL HYDRAULIC REPORT

HYDROLOGIC DATA

Date: July 2014

DRAINAGE AREA: 46.5 sq. mi.
CHARACTER OF TERRAIN: Hilly to mountainous, mixture of forested and open land cover.
STREAM CHARACTERISTICS: Incised, alluvial, sinuous to meandering. Some armored banks.
NATURE OF STREAMBED: Silt, sand, gravel and some stones

PEAK FLOW DATA

Q 2.33 =	1,500 cfs	Q 50 =	5,400 cfs
Q 10 =	3,200 cfs	Q 100 =	6,600 cfs
Q 25 =	4,400 cfs	Q 500 =	10,000 cfs

DATE OF FLOOD OF RECORD: Unknown
ESTIMATED DISCHARGE: Unknown
WATER SURFACE ELEV.: Unknown
NATURAL STREAM VELOCITY: @ Q25 = 7.0 fps
ICE CONDITIONS: Moderate
DEBRIS: Slight to moderate
DOES THE STREAM REACH MAXIMUM HIGHWATER ELEV. RAPIDLY? No
IS ORDINARY RISE RAPID? No
IS STAGE AFFECTED BY UPSTREAM OR DOWNSTREAM CONDITIONS? Yes
IF YES, DESCRIBE: Railroad bridge 100' downstream & confluence with Passumpsic River 700' downstream, affect hydraulics at the site.

WATERSHED STORAGE: < 1%
HEADWATERS:
UNIFORM: X
IMMEDIATELY ABOVE SITE:

EXISTING STRUCTURE INFORMATION

STRUCTURE TYPE: 3 span concrete T-beam bridge
YEAR BUILT: 1929
CLEAR SPAN(NORMAL TO STREAM): 33' + 48' + 33' = 114' total
VERTICAL CLEARANCE ABOVE STREAMBED: 21'
WATERWAY OF FULL OPENING: 1,130 sq. ft.
DISPOSITION OF STRUCTURE: Remove and replace with new bridge
TYPE OF MATERIAL UNDER SUBSTRUCTURE: See boring logs

WATER SURFACE ELEVATIONS AT:

Q2.33 =	542.8'	VELOCITY =	7.0 fps
Q10 =	550.9'	"	5.8 fps
Q25 =	552.2'	"	7.5 fps
Q50 =	553.8'	"	8.3 fps
Q100 =	555.0'	"	9.5 fps

LONG TERM STREAMBED CHANGES: The streambed through the bridge has lowered 2' to 3' since 1928, based on a comparison between record plans and the current conditions.

IS THE ROADWAY OVERTOPPED BELOW Q100: No
FREQUENCY: Above Q100
RELIEF ELEVATION: 554.4'
DISCHARGE OVER ROAD @Q100: None

UPSTREAM STRUCTURE

TOWN: St. Johnsbury — DISTANCE: 1,150'
HIGHWAY #: US 5 — STRUCTURE #: 127
CLEAR SPAN: 2 spans at 20' each = 40' total — CLEAR HEIGHT: 24'
YEAR BUILT: 1975 — FULL WATERWAY: 960 sq. ft.
STRUCTURE TYPE: Twin cell concrete box

DOWNSTREAM STRUCTURE

TOWN: St. Johnsbury — DISTANCE: 100'
HIGHWAY #: Washington County Railroad — STRUCTURE #:
CLEAR SPAN: 48' — CLEAR HEIGHT: 14'
YEAR BUILT: — FULL WATERWAY: 570 sq. ft.
STRUCTURE TYPE: Single span side girder bridge

PROPOSED STRUCTURE

STRUCTURE TYPE: Single span steel beam bridge

CLEAR SPAN(NORMAL TO STREAM): 105'
VERTICAL CLEARANCE ABOVE STREAMBED: 20'
WATERWAY OF FULL OPENING: 1570 sq. ft.

WATER SURFACE ELEVATIONS AT:

Q2.33 =	543.1'	VELOCITY=	7.1 fps
Q10 =	550.8'	"	5.3 fps
Q25 =	551.9'	"	6.6 fps
Q50 =	553.4'	"	7.2 fps
Q100 =	554.7'	"	7.9 fps

IS THE ROADWAY OVERTOPPED BELOW Q100: No
FREQUENCY: Above Q100
RELIEF ELEVATION: 554.4'
DISCHARGE OVER ROAD @Q100: None

AVERAGE LOW ELEVATION OF SUPERSTRUCTURE: 557.1'
VERTICAL CLEARANCE: @ Q25 = 5.2'

SCOUR: Total contraction scour and long term stream degradation = 4' at Q100'. Contraction scour is 1' and there is a potential for 3' of long term stream degradation.
REQUIRED CHANNEL PROTECTION: Stone Fill, Type III

PERMIT INFORMATION

AVERAGE DAILY FLOW:	95 cfs	
ORDINARY LOW WATER:	45 cfs	DEPTH OR ELEVATION:
ORDINARY HIGH WATER:	640 cfs	Elevation 537'
		Elevation 541'

TEMPORARY BRIDGE REQUIREMENTS

STRUCTURE TYPE: Single span bridge
CLEAR SPAN (NORMAL TO STREAM): 75' minimum
VERTICAL CLEARANCE ABOVE STREAMBED: Minimum elev. 552.0' on low end*
WATERWAY AREA OF FULL OPENING: 1,130 sq ft.

ADDITIONAL INFORMATION

* Temporary bridge minimum average bottom of beam elevation 554.0'.
**Hydraulics at this site is affected by water backing up from the Passumpsic River. This report is based on equal frequency floods on both the Sleepers River and that river. Velocities will be higher than reported when the the Passumpsic River is at lower levels.

TRAFFIC MAINTENANCE NOTES

1. MAINTAIN ONE-WAY TRAFFIC ON A TEMPORARY BRIDGE.
2. INSTALL AND MAINTAIN TRAFFIC SIGNALS.
3. INSTALL SIDEWALKS ON THE WEST SIDE OF THE BRIDGE.
4. THE APPROACHES FOR THE TEMPORARY BRIDGE SHALL BE PAVED.

DESIGN VALUES

1. DESIGN LIVE LOAD		HL-93
2. FUTURE PAVEMENT	d_p:	0.0 INCH
3. DESIGN SPAN	L:	111.00 FT
4. MIN. MID-SPAN POS. CAMBER @ RELEASE (PRESTRESSED UNITS)	Δ:	- - -
5. PRESTRESSING STRAND	f_y:	- - -
6. PRESTRESSED CONCRETE STRENGTH	f'_c:	- - -
7. PRESTRESSED CONCRETE RELEASE STRENGTH	f'_{ci}:	- - -
8. CONCRETE, HIGH PERFORMANCE CLASS AA	f'_c:	- - -
9. SP HIGH PERFORMANCE CONCRETE, CLASS PCD	f'_c:	4.0 KSI
10. SP HIGH PERFORMANCE CONCRETE, CLASS PCS	f'_c:	3.5 KSI
11. CONCRETE, CLASS C	f'_c:	- - -
12. REINFORCING STEEL	f_y:	60 KSI
13. STRUCTURAL STEEL AASHTO M270 (WEATHERING)	f_y:	50 & 70 KSI
14. NOMINAL BEARING RESISTANCE OF SOIL	q_n:	- - -
15. SOIL BEARING RESISTANCE FACTOR (REFER TO AASHTO LRFD)	ϕ:	- - -
16. NOMINAL BEARING RESISTANCE OF ROCK	q_n:	- - -
17. ROCK BEARING RESISTANCE FACTOR (REFER TO AASHTO LRFD)	ϕ:	- - -
18. PILE RESISTANCE FACTOR	ϕ:	0.65
19. LATERAL PILE DEFLECTION	Δ:	0.50 INCH
20. BASIC WIND SPEED	V_{3s}:	- - -
21. MINIMUM GROUND SNOW LOAD	p_g:	- - -
22. SEISMIC DATA — PGA: 0.65	S_s:	18 %g
	S_1:	5%g
23.		
24.		- - -
25.		18 %g
26.		5%g

LRFR LOAD RATING FACTORS

LOADING LEVELS	TRUCK H-20	HL-93	3S2	6 AXLE	3A. STR.	4A. STR.	5A. SEMI
TONNAGE	20	36	36	66	30	34.5	38
INVENTORY	1.52	1.11					
POSTING							
OPERATING	1.97	1.44	1.8	1.12	1.8	1.59	1.6
COMMENTS:							

AS BUILT "REBAR" DETAIL

LEVEL I	LEVEL II	LEVEL III
TYPE:	TYPE:	TYPE:
GRADE:	GRADE:	GRADE:

TRAFFIC DATA

YEAR	ADT	DHV	% D	% T	ADTT
2015	1200	160	54	5.5	160
2035	1200	160	54	6.9	200

20 year ESAL for flexible pavement from 2015 to 2035 : 0
40 year ESAL for flexible pavement from 2015 to 2055 : 0
Design Speed : 30 mph

TEMPORARY BRIDGE PROFILE ALONG TEMP CL

BOTTOM OF BEAMS ELEV. = 552.00 FT

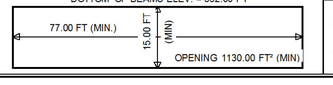

PILE DRIVING AND TESTING REQUIREMENTS

1. NOMINAL PILE DRIVING CAPACITY — Rndr: 692.00 KIP
2. PILE TEST RESISTANCE FACTOR — ϕ: 0.65
3. MAXIMUM PILE TIP ELEVATION — 518.70 FT
4. 0

PROJECT NAME: **ST. JOHNSBURY**
PROJECT NUMBER: **BRO 1447(30)**

FILE NAME: st johnsbury pi.xls
PROJECT LEADER: Mike Chenette
DESIGNED BY: G. Bogue
PRELIMINARY INFORMATION SHEET

PLOT DATE: 10/18/2016
DRAWN BY: L. Buxton
CHECKED BY: M. Chenette
SHEET 2 OF 76

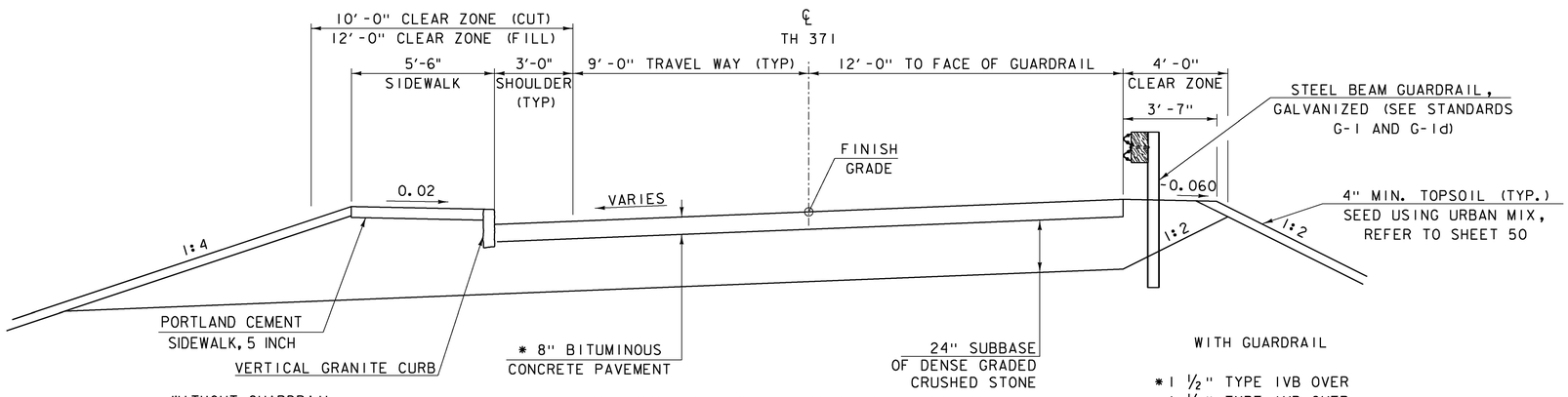

TH 371 ROADWAY TYPICAL SECTION

SCALE: ⅜" = 1'-0"

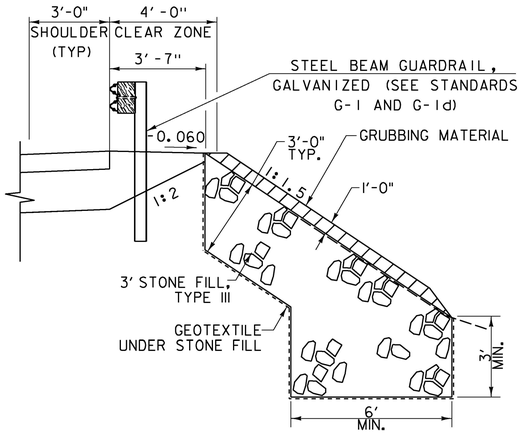

STEEP SLOPES TYPICAL

SCALE: ⅜" = 1'-0"

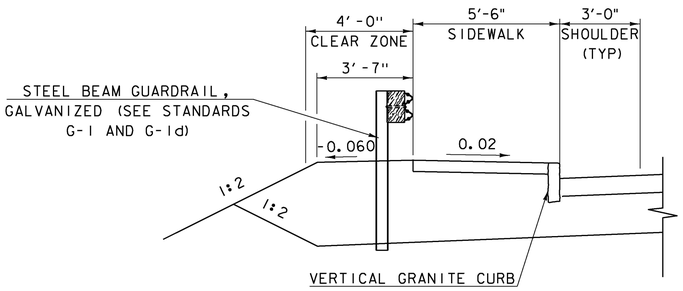

SIDEWALK WITH GUARDRAIL TYPICAL SECTION

NOTES:
1. BITUMINOUS CONCRETE PAVEMENT TYPE IIS WILL BE PAID UNDER ITEM 490.30, SUPERPAVE BITUMINOUS CONCRETE PAVEMENT. BITUMINOUS CONCRETE PAVEMENT TYPE IVB WILL BE PAID UNDER SPECIAL PROVISION (BITUMINOUS CONCRETE PAVEMENT, TYPE IVB).
2. EMULSIFIED ASPHALT SHALL BE APPLIED ON COLD PLANED SURFACES AT THE RATE OF 0.08 GAL/SY AND BETWEEN PAVED LAYERS AT THE RATE OF 0.04 GAL/SY.

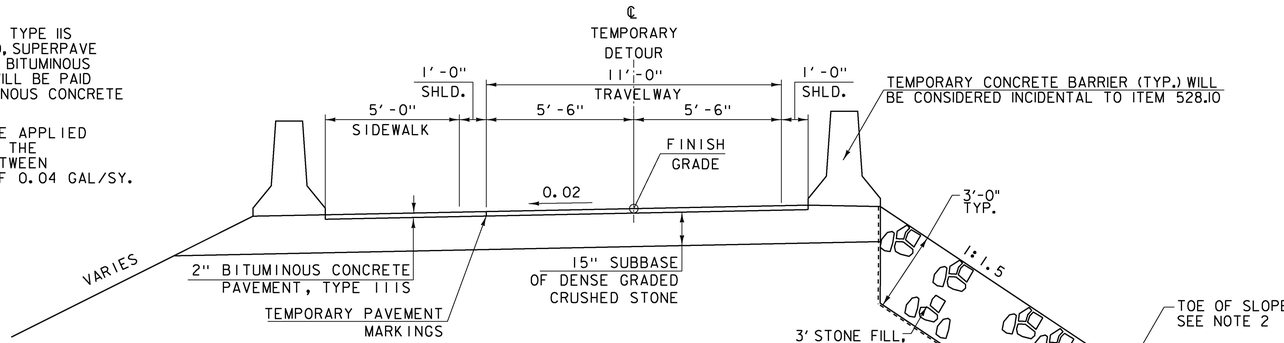

TEMPORARY DETOUR TYPICAL

SCALE: ⅜" = 1'-0"

NOTES
1.) SEE GENERAL TRAFFIC CONTROL NOTES ON SHEET 15. FOR PAYMENT INFORMATION RELATED TO THE TEMPORARY DETOUR CONSTRUCTION.

2.) THE CONTRACTOR SHALL NOTIFY THE RAILROAD (WASHINGTON COUNTY RAILROAD COMPANY) AND RECEIVE A PERMIT FROM THE RAILROAD AT LEAST TEN (10) DAYS IN ADVANCE OF STARTING WORK AND/OR LOCATING EQUIPMENT ON THE RAILROAD RIGHT-OF-WAY, IN ACCORDANCE WITH THE RAILROAD RIGHT-OF-WAY FINANCE AND MAINTENANCE AGREEMENT. THE CONTRACTOR SHALL CONTACT THE RAILROAD TO PROVIDE RAILROAD FLAGGERS, AS NEEDED DURING CONSTRUCTION. RAILROAD FLAGGER SERVICES WILL BE PAID FOR UNDER PAY ITEM 900.650, SPECIAL PROVISION (MAINTENANCE OF RAILROAD TRAFFIC)(N.A.B.I.)

3.) FOR ADDITIONAL INFORMATION ON TEMPORARY DETOUR SEE SHEET 15.

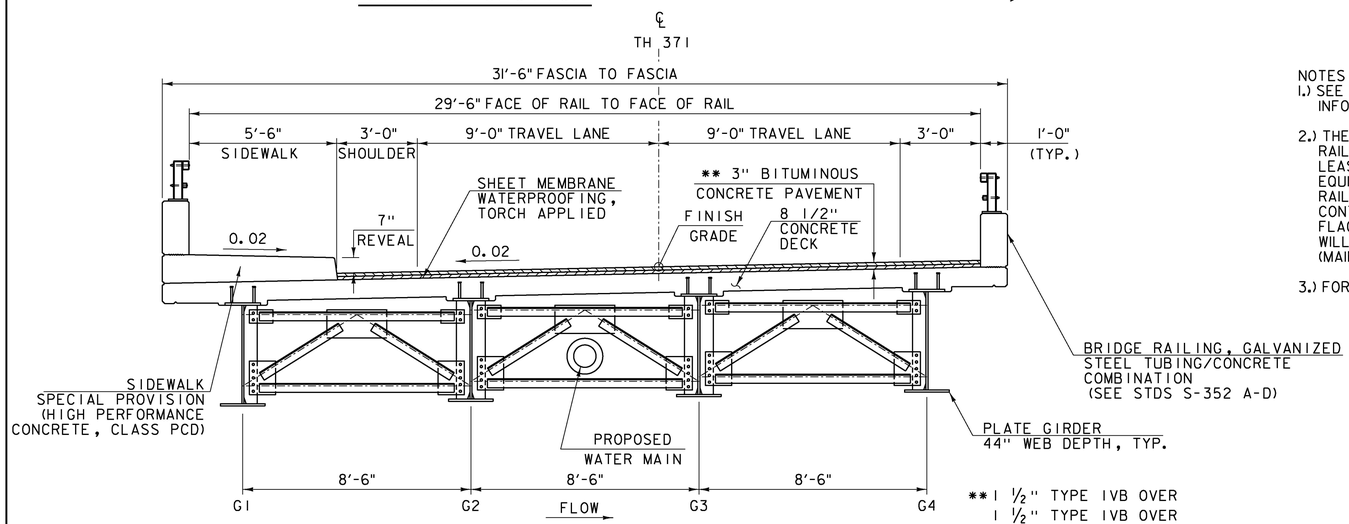

BRIDGE TYPICAL SECTION

SCALE: ⅜" = 1'-0"

MATERIAL TOLERANCES

SURFACE	
- PAVEMENT (TOTAL THICKNESS)	+/- ¼"
- AGGREGATE SURFACE COURSE	+/- ½"
SUBBASE	+/- 1"
GRANULAR BORROW	+/- 1"

Stantec

PROJECT NAME:	ST JOHNSBURY
PROJECT NUMBER:	BRO 1447(30)
FILE NAME: z12j1164typ.dgn	PLOT DATE: 10/14/2016
PROJECT LEADER: M. CHENETTE	DRAWN BY: L. BUXTON
DESIGNED BY: J. HUNGERFORD	CHECKED BY: M. CHENETTE
TYPICAL SECTIONS - TYP 1	SHEET 3 OF 76

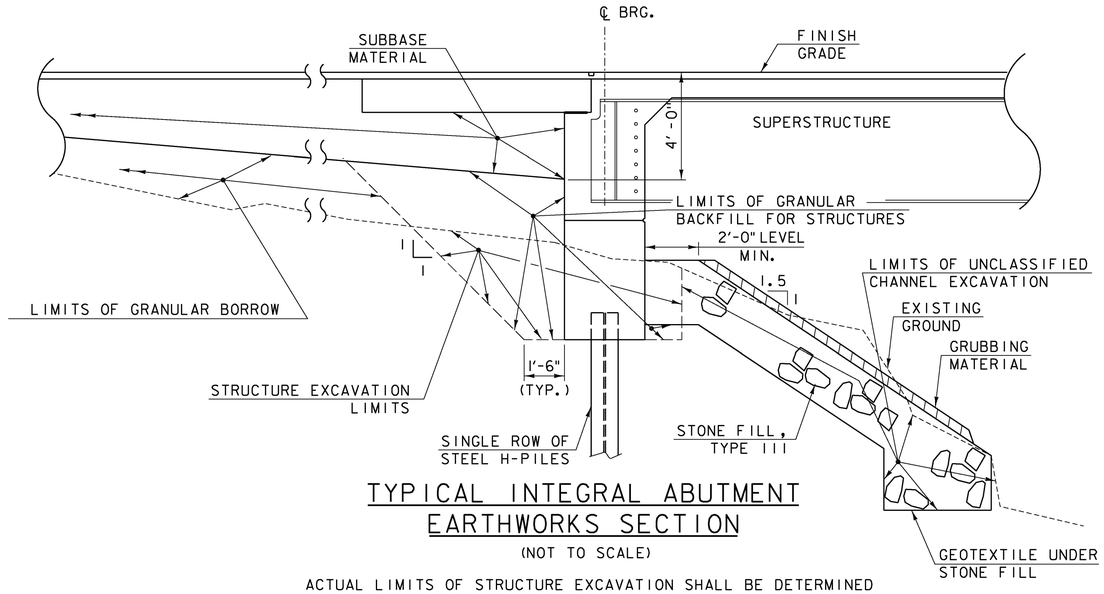

TYPICAL INTEGRAL ABUTMENT EARTHWORKS SECTION

(NOT TO SCALE)

ACTUAL LIMITS OF STRUCTURE EXCAVATION SHALL BE DETERMINED BY THE CONTRACTOR. HOWEVER, ONLY EXCAVATION BETWEEN THE LIMITS SHOWN WILL BE PAID FOR UNDER ITEM 204.25 (STRUCTURE EXCAVATION". EXCAVATION BY THE CONTRACTOR OUTSIDE OF THESE LIMITS WILL BE AT THE EXPENSE OF THE CONTRACTOR.)

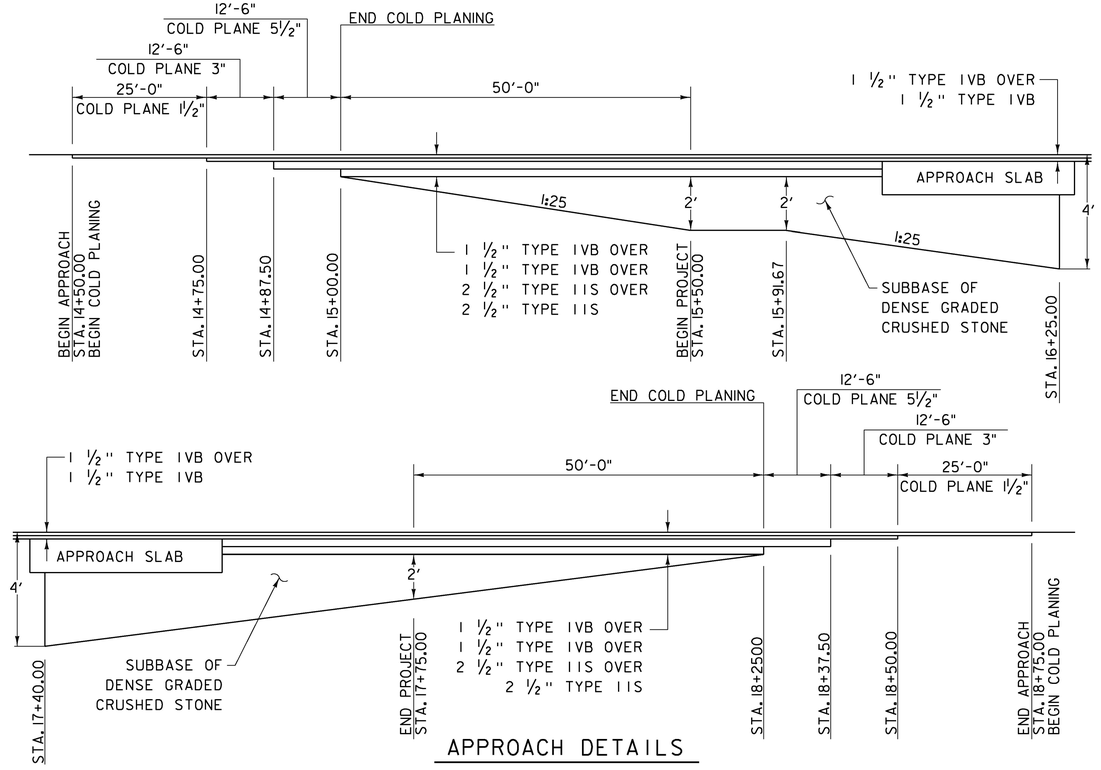

APPROACH DETAILS

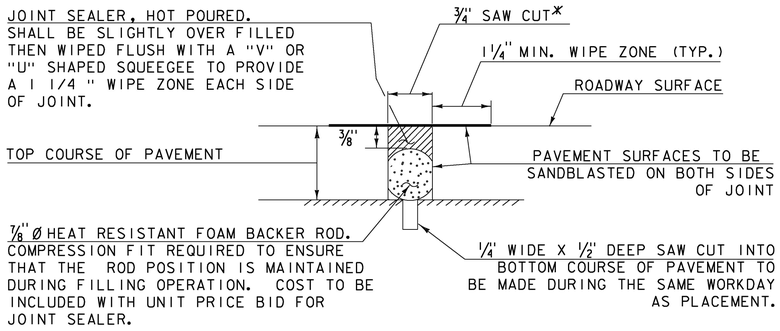

SAWED PAVEMENT JOINT DETAIL

NOT TO SCALE

*JOINT IS TO BE LOCATED ACCURATELY BY STRING LINING, OR OTHER MEANS, PRIOR TO PAVING, SO THAT THE SAW CUTS WILL BE MADE DIRECTLY OVER THE END OF CONCRETE DECK. JOINT SHALL BE CUT DRY IN A SINGLE PASS AND BE SEALED WITHIN 24 HOURS OR PRIOR TO EXPOSURE TO TRAFFIC. JOINT SHALL BE CLEANED PRIOR TO APPLYING THE JOINT SEALER.

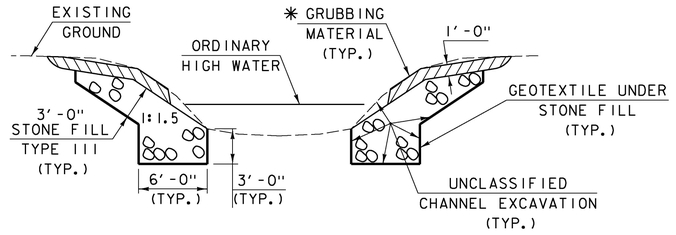

CHANNEL TYPICAL SECTION

NOT TO SCALE

* WHENEVER CHANNEL SLOPE INTERSECTS ROADWAY SUBBASE, GRUBBING MATERIAL SHALL BEGIN AT THE BOTTOM OF SUBBASE.

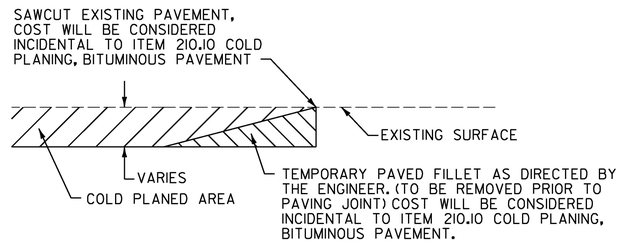

DETAIL AT VERTICAL COLD PLANE JOINTS

NOTE: THIS DETAIL SHALL BE USED AT THE LOCATIONS SHOWN ABOVE AS DIRECTED BY THE ENGINEER.

Stantec

PROJECT NAME:	ST JOHNSBURY
PROJECT NUMBER:	BRO 1447(30)
FILE NAME: z12j164typ.dgn	PLOT DATE: 9/30/2016
PROJECT LEADER: M. CHENETTE	DRAWN BY: L. BUXTON
DESIGNED BY: J. HUNGERFORD	CHECKED BY: M. CHENETTE
TYPICAL SECTIONS - TYP 2	SHEET 4 OF 76

GENERAL

1. ALL MATERIALS AND CONSTRUCTION SHALL CONFORM TO STATE OF VERMONT, AGENCY OF TRANSPORTATION, 2011 STANDARD SPECIFICATIONS AND ITS LATEST REVISIONS, AND THE AASHTO LRFD BRIDGE DESIGN SPECIFICATIONS, DATED 2012, AND ITS LATEST REVISIONS.
2. THE BRIDGE IS DESIGNED FOR HL93 LIVE LOAD.
3. ALL DIMENSIONS SHOWN IN THE PLANS ARE HORIZONTAL OR VERTICAL AND ARE GIVEN AT 68 DEGREES FAHRENHEIT, UNLESS NOTED OTHERWISE.

EARTHWORK & REMOVAL OF BRIDGE

4. ITEM 529.15 "REMOVAL OF STRUCTURE" IS FOR THE REMOVAL OF THE EXISTING STRUCTURE INCLUDING THE SUPERSTRUCTURE, ABANDONED COMMUNICATIONS UTILITIES AND APPURTENANCES, PIERS AND ABUTMENTS INCLUDING THE FOOTING AND ANY PORTION OF THE SUBSTRUCTURE OUTSIDE THE LIMITS OF STRUCTURE EXCAVATION OR UNCLASSIFIED CHANNEL EXCAVATION. VOIDS CREATED BY REMOVAL OF STRUCTURE THAT ARE OUTSIDE THE LIMITS OF STRUCTURE EXCAVATION OR UNCLASSIFIED EXCAVATION SHALL BE BACKFILLED WITH GRANULAR BACKFILL FOR STRUCTURES AND WILL BE PAID FOR UNDER ITEM 204.30, GRANULAR BACKFILL FOR STRUCTURES.
5. THE AREA DISTURBED BY THE TEMPORARY DETOUR OUTSIDE THE LIMITS OF THE PERMANENT CONSTRUCTION SHALL BE SEEDED AND MULCHED AFTER ALL THE FILL IS REMOVED TO THE ORIGINAL GROUND SURFACE. THE COST OF THE SEED, FERTILIZER, AND MULCH WILL BE PAID FOR UNDER THEIR RESPECTIVE ITEMS.
6. ITEM 613.12 STONE FILL, TYPE III SHALL BE PLACED IN FRONT OF THE ABUTMENTS BEFORE THE STRUCTURAL STEEL HAS BEEN SET.

CONCRETE

7. ALL EXPOSED EDGES OF CONCRETE SHALL BE CHAMFERED 1 INCH BY 1 INCH, UNLESS OTHERWISE NOTED.
8. JOINTS AND SCORE MARKS IN CONCRETE SHALL BE CONSTRUCTED AS INDICATED ON THE PLANS OR AS DIRECTED BY THE ENGINEER.
9. ITEM 900.608 SPECIAL PROVISION (HIGH PERFORMANCE CONCRETE, CLASS PCD) SHALL BE USED FOR THE DECK, BRIDGE RAIL CONCRETE, INTEGRAL ABUTMENT CURTAIN WALL AND WINGWALLS ABOVE THE PILE CAP CONSTRUCTION JOINT. ITEM 900.608 SPECIAL PROVISION (HIGH PERFORMANCE CONCRETE, CLASS PCS) SHALL BE USED BELOW THE PILE CAP CONSTRUCTION JOINT AND FOR THE APPROACH SLABS.
10. RECOMMENDED DECK POUR SEQUENCE: THE MAIN PORTION OF THE DECK BETWEEN THE CONSTRUCTION JOINTS SHALL BE PLACED PRIOR TO PLACING THE BRIDGE ENDS (ENDS OF DECK AND INTEGRAL CURTAIN WALLS). THERE SHALL BE A MINIMUM OF 96 HOURS BETWEEN COMPLETION OF THE MAIN PORTION OF THE DECK AND THE BRIDGE ENDS. THIS POUR SEQUENCE IS RECOMMENDED TO ALLOW ROTATION OF THE GIRDER ENDS WITHOUT IMPOSING ROTATION FORCES ON THE ABUTMENTS. ALTERNATE POUR SEQUENCES SHALL BE SUBMITTED TO THE ENGINEER FOR APPROVAL.
11. THE COST OF INSTALLING PVC WATERSTOPS, AS SHOWN IN THE PLANS, WILL BE CONSIDERED INCIDENTAL TO ITEM 900.608 SPECIAL PROVISION (HIGH PERFORMANCE CONCRETE, CLASS PCS). THE TYPE OF PVC WATERSTOP TO BE USED SHALL BE SUBMITTED BY THE CONTRACTOR TO THE ENGINEER FOR APPROVAL.
12. ITEM 514.10 "WATER REPELLENT, SILANE" SHALL BE APPLIED TO ALL EXPOSED CONRETE SURFACES EXCEPT THE UNDERSIDE OF THE DECK BETWEEN THE DRIP NOTCHES. PAYMENT FOR WATER REPELLENT, SILANE WILL BE MADE UNDER ITEM 514.10, WATER REPELLENT, SILANE.
13. CLEAR COVER ON REINFORCING STEEL SHALL BE PER THE FOLLOWING TABLE UNLESS NOTED OTHERWISE.

LOCATION	CLEAR COVER (INCHES)
UNDERSIDE OF BRIDGE DECK	1.5
EXPOSED TO EARTH OR WEATHER	2
TOP OF PAVED BRIDGE DECK	2.5
DIRECT EXPOSURE TO DEICING SALTS (CURBS, SIDEWALK AND RAILING)	3
CAST AGAINST EARTH	3

14. ALL REINFORCING STEEL SHALL BE DETAILED AND FABRICATED USING PROCEDURES AND TOLERANCES IN ACCORDANCE WITH APPLICABLE PUBLICATIONS OF THE "CONCRETE REINFORCING STEEL INSTITUTE".
15. ALL REINFORCING STEEL SHALL MEET THE REQUIREMENTS FOR LEVEL II CORROSION RESISTANCE REINFORCING STEEL IN ACCORDANCE WITH SECTION 507.
16. IN ACCORDANCE WITH SUBSECTION 506.23 (A) OF THE STANDARD SPECIFICATIONS AND AS DIRECTED BY THE ENGINEER, THE CONTRACTOR SHALL TAKE MEASURES NECESSARY TO PROTECT ALL SUBSTRUCTURE CONCRETE FROM STAINING DUE TO OXIDE FORMATION ON THE STRUCTURAL STEEL PRIOR TO PLACEMENT OF THE DECK. THESE MEASURES WILL NOT BE PAID FOR SEPARATELY BUT WILL BE CONSIDERED INCIDENTAL TO ITEM 900.608 SPECIAL PROVISION (HIGH PERFORMANCE CONCRETE, CLASS PCS). ANY SUCH STAINING THAT OCCURS PRIOR TO DECK PLACEMENT SHALL BE REMOVED AT NO ADDITIONAL COST TO THE STATE.

STRUCTURAL STEEL

17. ALL STRUCTURAL STEEL SHALL CONFORM TO AASHTO M 270M/M270, GRADE 50W.
18. ALL WELDING SHALL CONFORM TO THE PROVISIONS OF SUBSECTION 506.10.
19. BEAM WEBS SHALL BE PLUMB IN FINAL POSITION.
20. CHARPY V-NOTCH TEST: TEST STRUCTURAL STEEL MEMBERS DESIGNATED "CVN" IN THE PLANS IN ACCORDANCE WITH SUBSECTION 714.01.
21. BOLTS FOR ALL BOLTED FIELD CONNECTIONS SHALL BE 7/8 INCH DIAMETER HIGH STRENGTH BOLTS IN 15/16 INCH DIAMETER HOLES UNLESS OTHERWISE NOTED.
22. CONNECTIONS NOT SHOWN IN THE PLANS SHALL BE DETAILED BY THE FABRICATOR IN THE FABRICATION DRAWINGS AND SUBMITTED TO THE ENGINEER FOR APPROVAL.
23. AFTER THE SUPERSTRUCTURE STEEL HAS BEEN ERECTED, ELEVATIONS ALONG THE TOP OF GIRDERS SHALL BE TAKEN UNDER DIRECTION OF THE ENGINEER FOR USE IN DETERMINING THE FINAL GRADE AND HAUNCH DEPTHS.
24. HOLES IN WEB: FILL ANY BOLT HOLES IN THE WEBS OF THE BEAMS NOT OTHERWISE FILLED WITH BUTTON HEAD OR HEX HEAD BOLTS MEETING AASHTO M164 TYPE III. TIGHTEN THE BOLTS IN ACCORDANCE WITH SUBSECTION 506.19.

PILE NOTES

25. FOR ESTIMATING PURPOSES, THE PILE TIP ELEVATIONS WERE ASSUMED AND ARE SHOWN ON THE BORING LOGS. THE ACTUAL IN PLACE LENGTHS MAY VARY, BUT SHALL HAVE A MINIMUM EMBEDMENT DEPTH OF 30' BELOW THE BOTTOM OF THE PILE CAPS.
26. THE PILE SHALL BE HP14 x 89, GRADE 50.
27. PILE SHOES SHALL BE REQUIRED AND SHALL CONFORM TO SECTION 505.
28. THE REQUIRED NOMINAL AXIAL DRIVING RESISTANCE (RNDR) FOR THE PILES IS 692 KIPS PER PILE BASED ON AN APPLIED FACTORED AXIAL LOAD OF 450 KIPS PER PILE AND A DYNAMIC RESISTANCE FACTOR (ODYN) OF 0.65. TO ENSURE THAT THE NOMINAL RESISTANCE HAS BEEN ATTAINED AND TO PREVENT THE OVERSTRESSING OF THE PILES DURING DRIVING OPERATIONS, DYNAMIC TESTING SHALL BE PERFORMED IN ACCORDANCE WITH SUBSECTION 505.04, PAYMENT FOR PILE TESTING SHALL BE MADE UNDER ITEM 505.45 "DYNAMIC PILE LOADING TEST". A MINIMUM OF ONE DYNAMIC TEST SHALL BE CONDUCTED ON THE FIRST PILE DRIVEN FOR EACH ABUTMENT FOR A TOTAL OF TWO TESTS. MORE TESTS MAY BE REQUIRED BY THE ENGINEER.

TEMPORARY BRIDGE AND APPROACHES

29. TRAFFIC WILL BE MAINTAINED ON A ONE-WAY TEMPORARY BRIDGE. THE BRIDGE SHALL HAVE A SIDEWALK FOR PEDESTRIAN TRAFFIC.
30. THE DETOUR CURVES SHALL BE DESIGNED FOR A MINIMUM OF 25 MPH. ADVISORY SIGNS SHALL BE POSTED IN ACCORDANCE WITH THE MOST RECENT VERSION OF THE MANUAL OF UNIFORM TRAFFIC CONTROL DEVICES (MUTCD). THIS WORK WILL BE CONSIDERED INCIDENTAL TO ITEM 528.10 "ONE-WAY TEMPORARY BRIDGE".

WATER MAIN RELOCATION

31. WATER MAIN RELOCATION WORK SHALL CONSIST OF THE CONSTRUCTION AND RELOCATION OF THE EXISTING 10" DUCTILE IRON (DI) WATER MAIN WITH A NEW PERMANENT 10" DI WATER MAIN SUPPORTED UNDER THE NEW BRIDGE.

    THE RELOCATION WORK SHALL INCLUDE, BUT IS NOT LIMITED TO, INSTALLATION OF TWO (2) NEW PERMANENT TAPPING SLEEVES WITH TAPPING VALVES, NEW TEMPORARY UNDERGROUND 10" DI WATER MAIN, NEW TEMPORARY BLOW-OFF, AND NEW TEMPORARY 10" DI WATER MAIN SUSPENDED UNDER THE NEW TEMPORARY BRIDGE, FOLLOWED BY CONSTRUCTION OF NEW 10" DI UNDERGROUND WATER MAIN PIPING CONNECTED TO NEW 10" DI WATER MAIN SUPPORTED UNDER THE NEW BRIDGE.

    ANCILLARY WORK INCLUDES INSTALLATION OF TWO (2) NEW IN-LINE GATE VALVES, RELOCATION OF EXISTING FIRE HYDRANT, WATER SERVICE CONNECTION TO EXISTING PROPERTY, MAINTAINING AND TRANSFERRING THE EXISTING SYSTEM PIPING TO THE NEW WATER SYSTEM PIPING, AND REMOVAL OF ALL ASSOCIATED EXISTING AND TEMPORARY WATER MAIN PIPING.

    SEE WATER PROFILE, TEMPORARY UTILITY PLAN, UTILITY PLAN AND WATER DETAIL SHEETS FOR ADDITIONAL DETAILS.

    PAYMENT FOR NEW 10" DI TEMPORARY WATER MAIN AND ALL APPURTENANCES, INCLUDING REMOVAL OF EXISTING 10" DI WATER MAIN, ABANDONED 8" WATER MAIN, AND TEMPORARY 10" WATER MAIN, WILL BE INCLUDED UNDER ITEM 629.42, TRANSFER TO NEW SYSTEM, WATER SYSTEM.

Stantec

PROJECT NAME: ST JOHNSBURY
PROJECT NUMBER: BRO 1447(30)

FILE NAME: z12j164brg_nts.dgn
PROJECT LEADER: M. CHENETTE
DESIGNED BY: T. KNIGHT
PROJECT NOTES

PLOT DATE: 9/30/2016
DRAWN BY: L. BUXTON
CHECKED BY: M. CHENETTE

STATE OF VERMONT
AGENCY OF TRANSPORTATION

QUANTITY SHEET 1

SUMMARY OF ESTIMATED QUANTITIES									TOTALS		DESCRIPTIONS				DETAILED SUMMARY OF QUANTITIES		
				ROADWAY	EROSION CONTROL	UTILITIES	BRIDGE NO. 46	FULL C.E. ITEMS	TRAINING	GRAND TOTAL	FINAL	UNIT	ITEMS	ITEM NUMBER	ROUND	QUANTITIES	UNIT	ITEMS
				1						1		LS	CLEARING AND GRUBBING, INCLUDING INDIVIDUAL TREES AND STUMPS	201.10	-			
				750						750		CY	COMMON EXCAVATION	203.15	-			
							1400			1400		CY	UNCLASSIFIED CHANNEL EXCAVATION	203.27	-			
				40						40		CY	GRANULAR BORROW	203.32	-			
				1						1		CY	TRENCH EXCAVATION OF EARTH, EXPLORATORY (N.A.B.I.)	204.22	-			
							160			160		CY	STRUCTURE EXCAVATION	204.25	-			
							130			130		CY	GRANULAR BACKFILL FOR STRUCTURES	204.30	-			
				270						270		SY	COLD PLANING, BITUMINOUS PAVEMENT	210.10	-			
				675						675		CY	SUBBASE OF DENSE GRADED CRUSHED STONE	301.35	-			
				9						9		CWT	EMULSIFIED ASPHALT	404.65	-			
				1						1		LU	PRICE ADJUSTMENT, ASPHALT CEMENT (N.A.B.I.)	406.50	-			
				140						140		TON	SUPERPAVE BITUMINOUS CONCRETE PAVEMENT	490.30				
				1						1		LU	MAT DENSITY PAY ADJUSTMENT (N.A.B.I.)	490.32				
							1			1		LS	FURNISHING EQUIPMENT FOR DRIVING PILING	504.10	-			
							760			760		LF	STEEL PILING, HP 14 X 89	505.18	-			
							2			2		EACH	DYNAMIC PILE LOADING TEST	505.45				
							109000			109000		LB	STRUCTURAL STEEL, PLATE GIRDER	506.55	-			
							49608			49608		LB	REINFORCING STEEL, LEVEL II	507.12	-			
							1			1		LS	SHEAR CONNECTORS (896 - 7/8" X 7")	508.15				
							30			30		GAL	WATER REPELLENT, SILANE	514.10	-			
							50			50		LF	BRIDGE EXPANSION JOINT, ASPHALTIC PLUG	516.10	-			
							299			299		SY	SHEET MEMBRANE WATERPROOFING, TORCH APPLIED	519.20	-			
							50			50		LF	JOINT SEALER, HOT POURED	524.11	-			
							228			228		LF	BRIDGE RAILING, GALVANIZED STEEL TUBING/CONCRETE COMBINATION	525.45	-			
							1			1		LS	ONE-WAY TEMPORARY BRIDGE (1600 SF - EST.)	528.10	-			
							1			1		EACH	REMOVAL OF STRUCTURE (REMOVAL OF BRIDGE NO. 46)(3700 SF - EST.)	529.15				
							8			8		EACH	BEARING DEVICE ASSEMBLY, STEEL REINFORCED ELASTOMERIC PAD	531.17	-			
				20						20		LF	18" CPEP(SL)	601.2615	-			
				1						1		EACH	18" CPEPES	601.7015	-			
				1						1		EACH	PRECAST REINFORCED CONCRETE DROP INLET WITH CAST IRON GRATE	604.18	-			
						1				1		EACH	CHANGING ELEVATION OF SEWER MANHOLES	604.42	-			
				1270						1270		CY	STONE FILL, TYPE III	613.12	-			
				205						205		LF	VERTICAL GRANITE CURB	616.21	-			
				1						1		EACH	RELOCATE MAILBOX, SINGLE SUPPORT	617.10	-			
				110						110		SY	PORTLAND CEMENT CONCRETE SIDEWALK, 5 INCH	618.10	-			
				225						225		LF	STEEL BEAM GUARDRAIL, GALVANIZED	621.20	-			
				3						3		EACH	ANCHOR FOR STEEL BEAM RAIL	621.60	-			
							4			4		EACH	GUARDRAIL APPROACH SECTION, CONC COMB BRIDGE RAILING TL-3	621.748	-			
				25						25		LF	REMOVE AND RESET GUARDRAIL	621.75	-			
				150						150		LF	REMOVAL AND DISPOSAL OF GUARDRAIL	621.80	-			

Stantec

PROJECT NAME: ST JOHNSBURY
PROJECT NUMBER: BRO 1447(30)

FILE NAME: z12j164frm.dgn
PROJECT LEADER: M. CHENETTE
DESIGNED BY: D. YOULEN
QUANTITY SHEET 1

PLOT DATE: 10/17/2016
DRAWN BY: C. GENDRON
CHECKED BY: N. TIRK
SHEET 6 OF 76

STATE OF VERMONT
AGENCY OF TRANSPORTATION

QUANTITY SHEET 2

SUMMARY OF ESTIMATED QUANTITIES									TOTALS		DESCRIPTIONS				DETAILED SUMMARY OF QUANTITIES		
ROADWAY	EROSION CONTROL	UTILITIES	BRIDGE NO. 46	FULL C.E. ITEMS	TRAINING	GRAND TOTAL	FINAL	UNIT	ITEMS	ITEM NUMBER	ROUND	QUANTITIES	UNIT	ITEMS
		3				3		EACH	ADJUST ELEVATION OF VALVE BOX	629.20	-			
		1				1		EACH	RELOCATE HYDRANT	629.29	-			
		1				1		LS	TRANSFER TO NEW SYSTEM, WATER SYSTEM	629.42	-			
20						20		HR	UNIFORMED TRAFFIC OFFICERS	630.10	-			
200						200		HR	FLAGGERS	630.15	-			
				1		1		LS	FIELD OFFICE, ENGINEERS	631.10	-			
				1		1		LS	TESTING EQUIPMENT, CONCRETE	631.16	-			
				1		1		LS	TESTING EQUIPMENT, BITUMINOUS	631.17	-			
				3000		3000		DL	FIELD OFFICE TELEPHONE (N.A.B.I.)	631.26	-			
					520	520		HR	EMPLOYEE TRAINEESHIP	634.10				
1						1		LS	MOBILIZATION/DEMOBILIZATION	635.11	-			
4						4		EACH	PORTABLE CHANGEABLE MESSAGE SIGN	641.15	-			
850						850		LF	DURABLE 4 INCH YELLOW LINE	646.410	-			
1300						1300		SY	GEOTEXTILE UNDER STONE FILL	649.31	-			
	70					70		SY	GEOTEXTILE FOR SILT FENCE, WOVEN WIRE REINFORCED	649.515	-			
	200					200		SY	GEOTEXTILE FOR FILTER CURTAIN	649.61	-			
	35					35		LB	SEED	651.15	-			
	200					200		LB	FERTILIZER	651.18	-			
	1					1		TON	AGRICULTURAL LIMESTONE	651.20	-			
	1					1		TON	HAY MULCH	651.25	-			
	120					120		CY	TOPSOIL	651.35	-			
	1175					1175		SY	GRUBBING MATERIAL	651.40	-			
	1					1		LS	EPSC PLAN	652.10	-			
	100					100		HR	MONITORING EPSC PLAN	652.20	-			
	1					1		LU	MAINTENANCE OF EPSC PLAN (N.A.B.I.)	652.30	-			
	1500					1500		SY	TEMPORARY EROSION MATTING	653.20	-			
	40					40		CY	VEHICLE TRACKING PAD	653.35	-			
1						1		EACH	INLET PROTECTION DEVICE, TYPE II	653.41				
	510					510		LF	BARRIER FENCE	653.50				
15						15		SF	TRAFFIC SIGNS, TYPE A	675.20	-			
61						61		LF	SQUARE TUBE SIGN POST AND ANCHOR	675.341	-			
4						4		EACH	REMOVING SIGNS	675.50	-			
3						3		EACH	DELINEATOR WITH STEEL POST	676.10	-			
1						1		EACH	TEMPORARY TRAFFIC SIGNAL SYSTEM	678.40	-			
			210			210		CY	SPECIAL PROVISION (HIGH PERFORMANCE CONCRETE, CLASS PCD)	900.608				
			100			100		CY	SPECIAL PROVISION (HIGH PERFORMANCE CONCRETE, CLASS PCS)	900.608				
		1				1		EACH	SPECIAL PROVISION (CORPORATION STOP, ALL INCLUSIVE)(1")	900.620	-			
6						6		EACH	SPECIAL PROVISION (CPM SCHEDULE)	900.620				
		1				1		EACH	SPECIAL PROVISION (EXTENSION SERVICE BOX AND CURB STOP, ALL INCLUSIVE)(1")	900.620	-			
		2				2		EACH	SPECIAL PROVISION (GATE VALVE WITH VALVE BOX, ALL INCLUSIVE) (10")	900.620				

Stantec

PROJECT NAME: ST JOHNSBURY
PROJECT NUMBER: BRO 1447(30)

FILE NAME: z12j164frm.dgn
PROJECT LEADER: M. CHENETTE
DESIGNED BY: D. YOULEN
QUANTITY SHEET 2

PLOT DATE: 10/17/2016
DRAWN BY: C. GENDRON
CHECKED BY: N. TIRK
SHEET 7 OF 76

STATE OF VERMONT
AGENCY OF TRANSPORTATION

QUANTITY SHEET 3

SUMMARY OF ESTIMATED QUANTITIES												TOTALS		DESCRIPTIONS				DETAILED SUMMARY OF QUANTITIES		
					ROADWAY	EROSION CONTROL	UTILITIES	BRIDGE NO. 46	FULL C.E. ITEMS	TRAINING		GRAND TOTAL	FINAL	UNIT	ITEMS	ITEM NUMBER	ROUND	QUANTITIES	UNIT	ITEMS
							1					1		EACH	SPECIAL PROVISION (MANUAL AIR RELEASE, ALL INCLUSIVE)	900.620				
							2					2		EACH	SPECIAL PROVISION (TAPPING SLEEVE AND VALVE WITH VALVE BOX, ALL INCLUSIVE) (10" X 10")	900.620				
							80					80		LF	SPECIAL PROVISION (DUCTILE IRON PIPE, CEMENT LINED, ALL INCLUSIVE) (10")	900.640				
							15					15		LF	SPECIAL PROVISION (DUCTILE IRON PIPE, CEMENT LINED, ALL INCLUSIVE) (6")	900.640				
							35					35		LF	SPECIAL PROVISION (SEAMLESS COPPER WATER TUBE, ALL INCLUSIVE)(1")	900.640	-			
					1							1		LS	SPECIAL PROVISION (TRAFFIC CONTROL, ALL INCLUSIVE)	900.645	-			
							1					1		LS	SPECIAL PROVISION (WATER MAIN ON BRIDGE)(10")	900.645				
					1							1		LU	SPECIAL PROVISION (MAINTENANCE OF RAILROAD TRAFFIC)(N.A.B.I.)	900.650				
					1							1		LU	SPECIAL PROVISION (MAT DENSITY PAY ADJUSTMENT, TYPE IVB)(N.A.B.I.)	900.650				
					150							150		SY	SPECIAL PROVISION (HAND-PLACED BITUMINOUS CONCRETE MATERIAL, DRIVES)	900.675				
					180							180		TON	SPECIAL PROVISION (BITUMINOUS CONCRETE PAVEMENT, TYPE IVB)	900.680				

Stantec

PROJECT NAME:	ST JOHNSBURY
PROJECT NUMBER:	BRO 1447(30)
FILE NAME: z12j164frm.dgn	PLOT DATE: 10/17/2016
PROJECT LEADER: M. CHENETTE	DRAWN BY: C. GENDRON
DESIGNED BY: D. YOULEN	CHECKED BY: N. TIRK
QUANTITY SHEET 3	SHEET 8 OF 76

STATE OF VERMONT
AGENCY OF TRANSPORTATION

BRIDGE QUANTITY SHEET 1

SUMMARY OF BRIDGE QUANTITIES									TOTALS	DESCRIPTIONS			DETAILED SUMMARY OF QUANTITIES		
MISC	DECK	ABUTMENT 1	ABUTMENT 2	APPROACH SLAB 1	APPROACH SLAB 2	SUPER-STRUCTURE	BRIDGE TOTAL	UNIT	ITEMS	ITEM NUMBER	QUANTITIES	UNIT	ITEMS
1400							1400	CY	UNCLASSIFIED CHANNEL EXCAVATION	203.27			
		52	108				160	CY	STRUCTURE EXCAVATION	204.25			
		65	65				130	CY	GRANULAR BACKFILL FOR STRUCTURES	204.30			
		1					1	LS	FURNISHING EQUIPMENT FOR DRIVING PILING	504.10			
		392	368				760	LF	STEEL PILING, HP 14 X 89	505.18			
		1	1				2	EACH	DYNAMIC PILE LOADING TEST	505.45			
						109000	109000	LB	STRUCTURAL STEEL, PLATE GIRDER	506.55			
	29926	7252	7411	2604	2415		49608	LB	REINFORCING STEEL, LEVEL II	507.12			
						1	1	LS	SHEAR CONNECTORS (896 - 7/8" X 7")	508.15			
		4	4			22	30	GAL	WATER REPELLENT, SILANE	514.10			
				25	25		50	LF	BRIDGE EXPANSION JOINT, ASPHALTIC PLUG	516.10			
	299						299	SY	SHEET MEMBRANE WATERPROOFING, TORCH APPLIED	519.20			
				25	25		50	LF	JOINT SEALER, HOT POURED	524.11			
						228	228	LF	BRIDGE RAILING, GALVANIZED STEEL TUBING/CONCRETE COMBINATION	525.45			
1							1	LS	ONE-WAY TEMPORARY BRIDGE (1600 SF - EST.)	528.10			
1							1	EACH	REMOVAL OF STRUCTURE (REMOVAL OF BRIDGE NO. 46)(3700 SF - EST.)	529.15			
		4	4				8	EACH	BEARING DEVICE ASSEMBLY, STEEL REINFORCED ELASTOMERIC PAD	531.17			
				2	2		4	EACH	GUARDRAIL APPROACH SECTION, CONC COMB BRIDGE RAILING TL-3	621.748			
	150	30	30				210	CY	SPECIAL PROVISION (HIGH PERFORMANCE CONCRETE, CLASS PCD)	900.608			
		29	29	21	21		100	CY	SPECIAL PROVISION (HIGH PERFORMANCE CONCRETE, CLASS PCS)	900.608			

PROJECT NAME: ST JOHNSBURY
PROJECT NUMBER: BRO 1447(30)

FILE NAME: z12j164frm.dgn
PROJECT LEADER: M. CHENETTE
DESIGNED BY: D. YOULEN
BRIDGE QUANTITY SHEET 1

PLOT DATE: 9/30/2016
DRAWN BY: C. GENDRON
CHECKED BY: N. TIRK
SHEET 9 OF 76

GENERAL INFORMATION

SYMBOLOGY LEGEND NOTE

THE SYMBOLOGY ON THIS SHEET IS INTENDED TO COVER STANDARD CONVENTIONAL SYMBOLOGY. THE SYMBOLOGY IS USED FOR EXISTING & PROPOSED FEATURES WITH HEAVIER LINEWEIGHT, IN COMBINATION WITH PROJECT ANNOTATION, AS NOTED ON PROJECT PLAN SHEETS. THIS LEGEND SHEET COVERS THE BASICS. SYMBOLOGY ON PLANS MAY VARY, PLAN ANNOTATIONS AND NOTES SHOULD BE USED TO CLARIFY AS NEEDED.

R.O.W. ABBREVIATIONS (CODES) & SYMBOLS

POINT	CODE	DESCRIPTION
	CH	CHANNEL EASEMENT
	CONST	CONSTRUCTION EASEMENT
	CUL	CULVERT EASEMENT
	D&C	DISCONNECT & CONNECT
	DIT	DITCH EASEMENT
	DR	DRAINAGE EASEMENT
	DRIVE	DRIVEWAY EASEMENT
	EC	EROSION CONTROL
	HWY	HIGHWAY EASEMENT
	I&M	INSTALL & MAINTAIN EASEMENT
	LAND	LANDSCAPE EASEMENT
	R&RES	REMOVE & RESET
	R&REP	REMOVE & REPLACE
	SR	SLOPE RIGHT
	UE	UTILITY EASEMENT
	(P)	PERMANENT EASEMENT
	(T)	TEMPORARY EASEMENT
■	BNDNS	BOUND SET
⧈	BNDNS	BOUND TO BE SET
●	IPNS	IRON PIN SET
◎	IPNS	IRON PIN TO BE SET
⊠	CALC	EXISTING ROW POINT
○	PROW	PROPOSED ROW POINT
[LENGTH]		LENGTH CARRIED ON NEXT SHEET

COMMON TOPOGRAPHIC POINT SYMBOLS

POINT	CODE	DESCRIPTION
	APL	BOUND APPARENT LOCATION
	BM	BENCHMARK
	BND	BOUND
	CB	CATCH BASIN
	COMB	COMBINATION POLE
	DITHR	DROP INLET THROATED DNC
	EL	ELECTRIC POWER POLE
	FPOLE	FLAGPOLE
	GASFIL	GAS FILLER
	GP	GUIDE POST
	GSO	GAS SHUT OFF
	GUY	GUY POLE
	GUYW	GUY WIRE
	GV	GATE VALUE
	H	TREE HARDWOOD
	HCTRL	CONTROL HORIZONTAL
	HVCTRL	CONTROL HORIZ. & VERTICAL
	HYD	HYDRANT
	IP	IRON PIN
	IPIPE	IRON PIPE
	LI	LIGHT - STREET OR YARD
	MB	MAILBOX
	MH	MANHOLE (MH)
	MM	MILE MARKER
	PM	PARKING METER
	PMK	PROJECT MARKER
	POST	POST STONE/WOOD
	RRSIG	RAILROAD SIGNAL
	RRSL	RAILROAD SWITCH LEVER
	S	TREE SOFTWOOD
	SAT	SATELLITE DISH
	SHRUB	SHRUB
	SIGN	SIGN
	STUMP	STUMP
	TEL	TELEPHONE POLE
	TIE	TIE
	TSIGN	SIGN W/DOUBLE POST
	VCTRL	CONTROL VERTICAL
	WELL	WELL
	WSO	WATER SHUT OFF

THESE ARE COMMON VAOT SURVEY POINT SYMBOLS FOR EXISTING FEATURES, ALSO USED FOR PROPOSED FEATURES WITH HEAVIER LINEWEIGHT, IN COMBINATION WITH PROPOSED ANNOTATION.

PROPOSED GEOMETRY CODES

CODE	DESCRIPTION
PC	POINT OF CURVATURE
PI	POINT OF INTERSECTION
CC	CENTER OF CURVE
PT	POINT OF TANGENCY
PCC	POINT OF COMPOUND CURVE
PRC	POINT OF REVERSE CURVE
POB	POINT OF BEGINNING
POE	POINT OF ENDING
STA	STATION PREFIX
AH	AHEAD STATION SUFFIX
BK	BACK STATION SUFFIX
D	CURVE DEGREE OF (100FT)
R	CURVE RADUIS OF
T	CURVE TANGENT LENGTH
L	CURVE LENGTH OF
E	CURVE EXTERNAL DISTANCE

UTILITY SYMBOLOGY

UNDERGROUND UTILITIES

- UGU — UTILITY (GENERIC-UNKNOWN)
- UT — TELEPHONE
- UE — ELECTRIC
- UC — CABLE (TV)
- UEC — ELECTRIC+CABLE
- UET — ELECTRIC+TELEPHONE
- UCT — CABLE+TELEPHONE
- UECT — ELECTRIC+CABLE+TELEP.
- G — GAS LINE
- W — WATER LINE
- S — SANITARY SEWER (SEPTIC)

ABOVE GROUND UTILITIES (AERIAL)

- AGU — UTILITY (GENERIC-UNKNOWN)
- T — TELEPHONE
- E — ELECTRIC
- C — CABLE (TV)
- EC — ELECTRIC+CABLE
- ET — ELECTRIC+TELEPHONE
- AER E&T — ELECTRIC+TELEPHONE
- CT — CABLE+TELEPHONE
- ECT — ELECTRIC+CABLE+TELEP.
- UTILITY POLE GUY WIRE

PROJECT CONSTRUCTION SYMBOLOGY

PROJECT DESIGN & LAYOUT SYMBOLOGY

- CZ — CLEAR ZONE
- PLAN LAYOUT MATCHLINE

PROJECT CONSTRUCTION FEATURES

- TOP OF CUT SLOPE
- TOE OF FILL SLOPE
- STONE FILL
- BOTTOM OF DITCH ℄
- CULVERT PROPOSED
- STRUCTURE SUBSURFACE
- PROJECT DEMARCATION FENCE
- BARRIER FENCE
- TREE PROTECTION ZONE (TPZ)
- STRIPING LINE REMOVAL
- SHEET PILES

CONVENTIONAL BOUNDARY SYMBOLOGY

BOUNDARY LINES

- TOWN BOUNDARY LINE
- COUNTY BOUNDARY LINE
- STATE BOUNDARY LINE
- PROPOSED STATE R.O.W. (LIMITED ACCESS)
- PROPOSED STATE R.O.W.
- STATE ROW (LIMITED ACCESS)
- STATE ROW
- TOWN ROW
- PERMANENT EASEMENT LINE (P)
- TEMPORARY EASEMENT LINE (T)
- SURVEY LINE
- PROPERTY LINE (P/L)
- SLOPE RIGHTS
- 6F PROPERTY BOUNDARY
- 4F PROPERTY BOUNDARY
- HAZARDOUS WASTE

EPSC LAYOUT PLAN SYMBOLOGY

EPSC MEASURES

- FILTER CURTAIN
- SILT FENCE
- SILT FENCE WOVEN WIRE
- CHECK DAM
- DISTURBED AREAS REQUIRING RE-VEGETATION
- EROSION MATTING

SEE EPSC DETAIL SHEETS FOR ADDITIONAL SYMBOLOGY

ENVIRONMENTAL RESOURCES

- WETLAND BOUNDARY
- RIPARIAN BUFFER ZONE
- WETLAND BUFFER ZONE
- SOIL TYPE BOUNDARY
- T&E — THREATENED & ENDANGERED SPECIES
- HAZ — HAZARDOUS WASTE AREA
- AG — AGRICULTURAL LAND
- HABITAT — FISH & WILDLIFE HABITAT
- FLOOD PLAIN — FLOOD PLAIN
- OHW — ORDINARY HIGH WATER (OHW)
- STORM WATER
- USDA FOREST SERVICE LANDS
- WILDLIFE HABITAT SUIT/CONN

ARCHEOLOGICAL & HISTORIC

- ARCH — ARCHEOLOGICAL BOUNDARY
- HISTORIC DIST — HISTORIC DISTRICT BOUNDARY
- HISTORIC — HISTORIC AREA
- Ⓗ HISTORIC STRUCTURE

CONVENTIONAL TOPOGRAPHIC SYMBOLOGY

EXISTING FEATURES

- ROAD EDGE PAVEMENT
- ROAD EDGE GRAVEL
- DRIVEWAY EDGE
- DITCH
- FOUNDATION
- FENCE (EXISTING)
- FENCE WOOD POST
- FENCE STEEL POST
- GARDEN
- ROAD GUARDRAIL
- RAILROAD TRACKS
- CULVERT (EXISTING)
- STONE WALL
- WALL
- WOOD LINE
- BRUSH LINE
- HEDGE
- BODY OF WATER EDGE
- LEDGE EXPOSED

Stantec

PROJECT NAME:	ST JOHNSBURY
PROJECT NUMBER:	BRO 1447(30)
FILE NAME: z12J164legend.dgn	PLOT DATE: 9/30/2016
PROJECT LEADER: M. CHENETTE	DRAWN BY: M. LONGSTREET
DESIGNED BY: M. LONGSTREET	CHECKED BY: M. LONGSTREET
CONVENTIONAL SYMBOLOGY LEGEND	SHEET 10 OF 76

GPS CONTROL POINTS

HVCTRL #1

BAY ST

NORTH = 698954.890
EAST = 1767290.970
ELEV. = 573.601

17.9 M WSW OF AND ABOUT 0.4 M HIGHER THAN THE CL OF BAY STREET, 1.3 M E OF THE E EDGE OF THE GRAVEL DRIVE, 14.3 M SW OF POLE NO 3/3B, 31.6 M SE OF THE SE CORNER OF THE ADDITION OF THE WASHINGTON COUNTY RAILROAD BUILDING, 9.1 M NW OF THE NW CORNER OF A CHAIN LINK FENCE, 31.2 M E OF THE E RAIL OF THE MOST EASTERLY SET OF TRACKS, 36.8 M SSW OF AN UPRIGHT STEEL I-BEAM AT THE SE CORNER OF A SINGLE STORY, DOUBLE BAY, BRICK BUILDING AT THE CVPS BAY STREET SUBSTATION, AND 0.3 M W OF A WITNESS POST.

HVCTRL #2

R 54

NORTH = 696739.040
EAST = 1766088.430
ELEV. = 580.69

GENERAL LOCATION, ST. JOHNSBURY, VT. TO REACH FROM THE INTERSECTION OF U.S. ROUTE 5 AND U.S. ROUTE 2 EAST IN DOWNTOWN ST. JOHNSBURY GO SOUTH ALONG U.S. ROUTE 5 FOR 0.6 MI (1.0 KM) TO THE INTERSECTION OF SOUTH STREET LEFT AND ALT 5 RIGHT AND THE MARK ON THE RIGHT IN THE SOUTHWEST QUADDRANT OF THE INTERSECTION. THE MARK IS A STANDARD DISK SET INSIDE A 4 INCH PVC PIPE. IT IS 1.6 M (5.2 FT) NORTHWEST OF THE NORTHWEST EDGE OF PAVEMENT OF U.S. ROUTE 5, 5.9 M (19.4 FT) SOUTH OF A WATER SHUT OFF RISER, 10.6 M (34.8 FT) SOUTHWEST OF A 1.2 M (3.9 FT) X 1.2 M (3.9 FT) CONCRETE DRAINAGE INLET, 0.8 M (2.6 FT) NORTHWEST OF A STEEL LIGHT POLE, AND 0.3 M (1.0 FT) SOUTHEAST OF A METAL WITNESS POST. STATION RECOVERY (2001) RECOVERY NOTE BY VERMONT GEODETIC SURVEY 2001 (CHR) TO REACH FROM THE INTERSECTION OF U.S. ROUTE 5 AND U.S. ROUTE 2 EAST IN DOWNTOWN ST JOHNSBURY GO SOUTH ALONG U.S. ROUTE 5 FOR 0.6 MI TO THE INTERSECTION OF MAIN STREET LEFT AND RIGHT AND THE SITE OF THE MARK ON THE RIGHT IN THE SOUTHWEST QUADRANT OF THE INTERSECTION. NOTE, MAIN STREE RIGHT IS ALSO ALTERNATE U.S. ROUTE 5.

TRAVERSE TIES

HVCTRL #20

NORTH = 696707.910
EAST = 1766320.490
ELEV. = 581.680

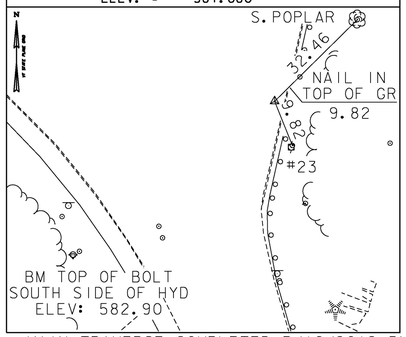

#30

NORTH = 696470.533
EAST = 1766371.005
ELEV. = 573.706

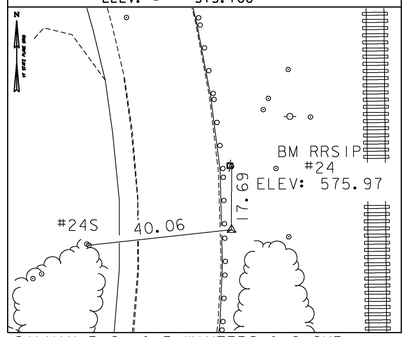

HVCTRL #31

NORTH = 695901.656
EAST = 1766089.299
ELEV. = 557.076

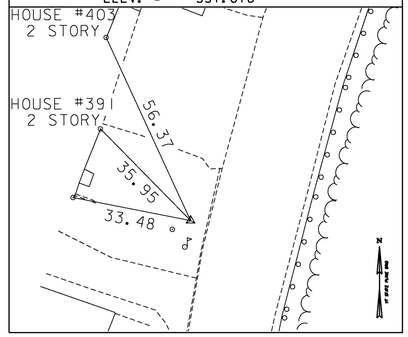

NORTH =
EAST =
ELEV. =

NORTH =
EAST =
ELEV. =

* MAIN TRAVERSE COMPLETED 5/16/2012 BY R.GILMAN P.C. & P.WINTERS & C.CYR

ALIGNMENT TIES

NORTH =
EAST =
ELEV. =

NORTH =
EAST =
ELEV. =

NORTH =
EAST =
ELEV. =

NORTH =
EAST =
ELEV. =

NORTH =
EAST =
ELEV. =

DATUM

VERTICAL NAVD 88
HORIZONTAL NAD 83 (96)
ADJUSTMENT COMPASS

PROJECT NAME: ST JOHNSBURY
PROJECT NUMBER: BRO 1447(30)

FILE NAME: z12j164ti.dgn
PROJECT LEADER: M. CHENETTE
DESIGNED BY: VTRANS
TIE SHEET

PLOT DATE: 9/30/2016
DRAWN BY: VTRANS
CHECKED BY: VTRANS
SHEET 11 OF 76

BRIDGE RAILING, GALVANIZED STEEL TUBING/CONCRETE COMBINATION
STA. 16+21 TO 17+34, LT
STA. 16+30 TO 17+42, RT

VERTICAL GRANITE CURB
STA. 15+26 TO 16+27, LT
STA. 17+38 TO 18+25, LT

PORTLAND CEMENT CONCRETE SIDEWALK, 5 INCH
STA. 15+26 TO 16+27, LT
STA. 17+38 TO 18+25, LT

STEEL BEAM GUARDRAIL, GALVANIZED
STA. 15+65.5 TO 16+03.0, LT
STA. 15+80.3 TO 16+12.0, RT
STA. 17+52.0 TO 17+89.5, LT
STA. 17+60.0 TO 18+75.0, RT

REMOVE AND RESET GUARDRAIL
STA. 18+75.0 TO 19+00.0
(TRANSITION TO HEIGHT OF NEW GUARDRAIL)

ANCHOR FOR STEEL BEAM RAIL
STA. 15+65.5, LT
STA. 15+80.3, RT
STA. 17+89.5, LT

REMOVAL AND DISPOSAL OF GUARDRAIL
STA. 15+71 TO 16+01, LT
STA. 17+32 TO 17+62, LT
STA. 17+40 TO 18+25, RT

*CONSTRUCT DRIVE
STA. 14+98, RT (34' PAVED) (COMMERCIAL)
STA. 15+08, LT (34.5' PAVED) (RESIDENTIAL)
STA. 15+66, RT (39.5' PAVED) (COMMERCIAL)

*DRIVE CONSTRUCTION PAID AS ITEMS:
203.15 COMMON EXCAVATION
301.35 SUBBASE OF DENSE GRADED CRUSHED STONE
900.675 SPECIAL PROVISION (HAND-PLACED BITUMINOUS CONCRETE MATERIAL, DRIVES)

GUARDRAIL APPROACH SECTION, CONC COMB BRIDGE RAILING TL-3
STA. 16+03 TO 16+21, LT
STA. 16+12 TO 16+30, RT
STA. 17+34 TO 17+52, LT
STA. 17+42 TO 17+60, RT

RELOCATE MAILBOX, SINGLE SUPPORT
STA. 15+75, LT

PRECAST REINFORCED CONCRETE DROP INLET WITH CAST IRON GRATE
STA. 17+61, LT
15+35, LT

18" CPEP (SL)
STA. 17+50, LT TO 17+61, LT (20')
STA. 15+35, LT TO 16+15, LT

18" CPEPES
STA. 17+50

CURVE 1 DATA
PC = STA 11+51.42
Δ = 20°55'01"
D = 5°59'58"
R = 955.00'
T = 176.28'
L = 348.64'
E = 16.13'

CURVE 2 DATA
Δ = 45°57'00"
D = 24°22'52"
R = 235.00'
T = 99.63'
L = 188.47'
E = 20.25'

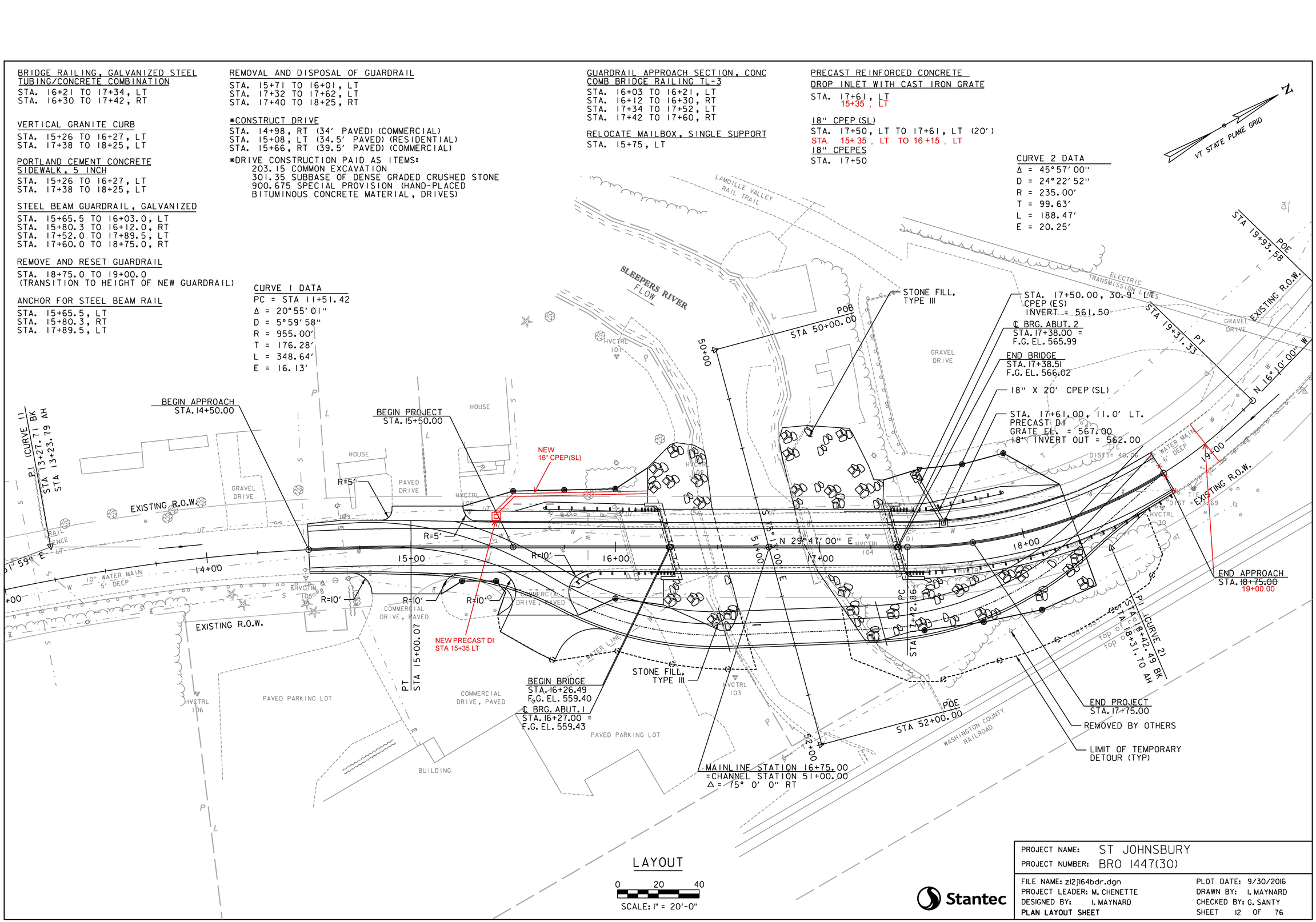

LAYOUT
0 20 40
SCALE: 1" = 20'-0"

Stantec

PROJECT NAME:	ST JOHNSBURY
PROJECT NUMBER:	BRO 1447(30)
FILE NAME: z12j164bdr.dgn	PLOT DATE: 9/30/2016
PROJECT LEADER: M. CHENETTE	DRAWN BY: I. MAYNARD
DESIGNED BY: I. MAYNARD	CHECKED BY: G. SANTY
PLAN LAYOUT SHEET	SHEET 12 OF 76

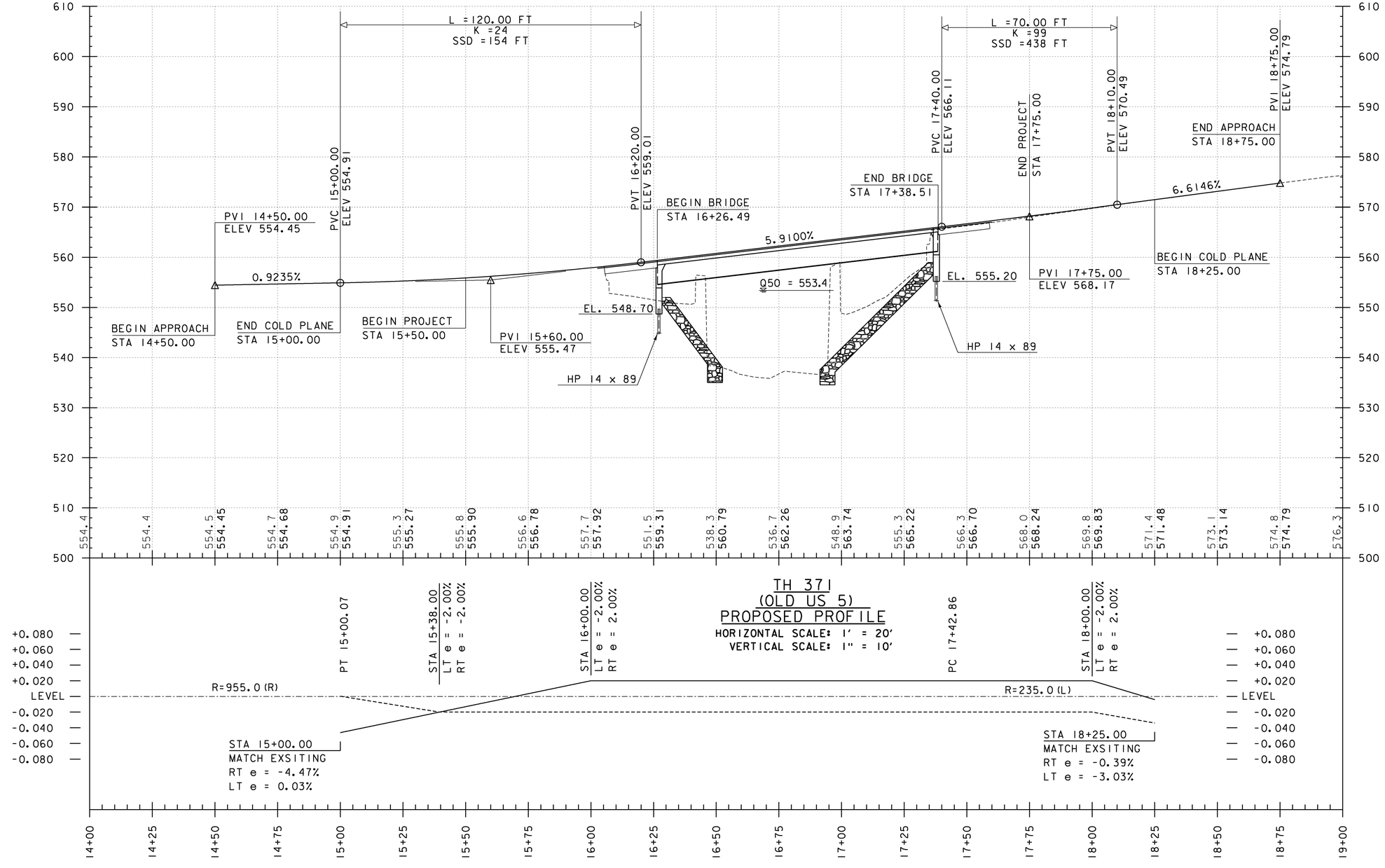

BANKING DIAGRAM

HORIZONTAL SCALE: 1' = 20'

NOTE:

GRADES SHOWN TO THE NEAREST TENTH ARE EXISTING GROUND ALONG ℄

GRADES SHOWN TO THE NEAREST HUNDREDTH ARE FINISH GRADE ALONG ℄

Stantec

PROJECT NAME: ST JOHNSBURY	
PROJECT NUMBER: BRO 1447(30)	
FILE NAME: z12j164profile.dgn	PLOT DATE: 9/30/2016
PROJECT LEADER: M. CHENETTE	DRAWN BY: I. MAYNARD
DESIGNED BY: I. MAYNARD	CHECKED BY: M. CHENETTE
PROFILE SHEET AND BANKING DIAGRAM	SHEET 13 OF 76

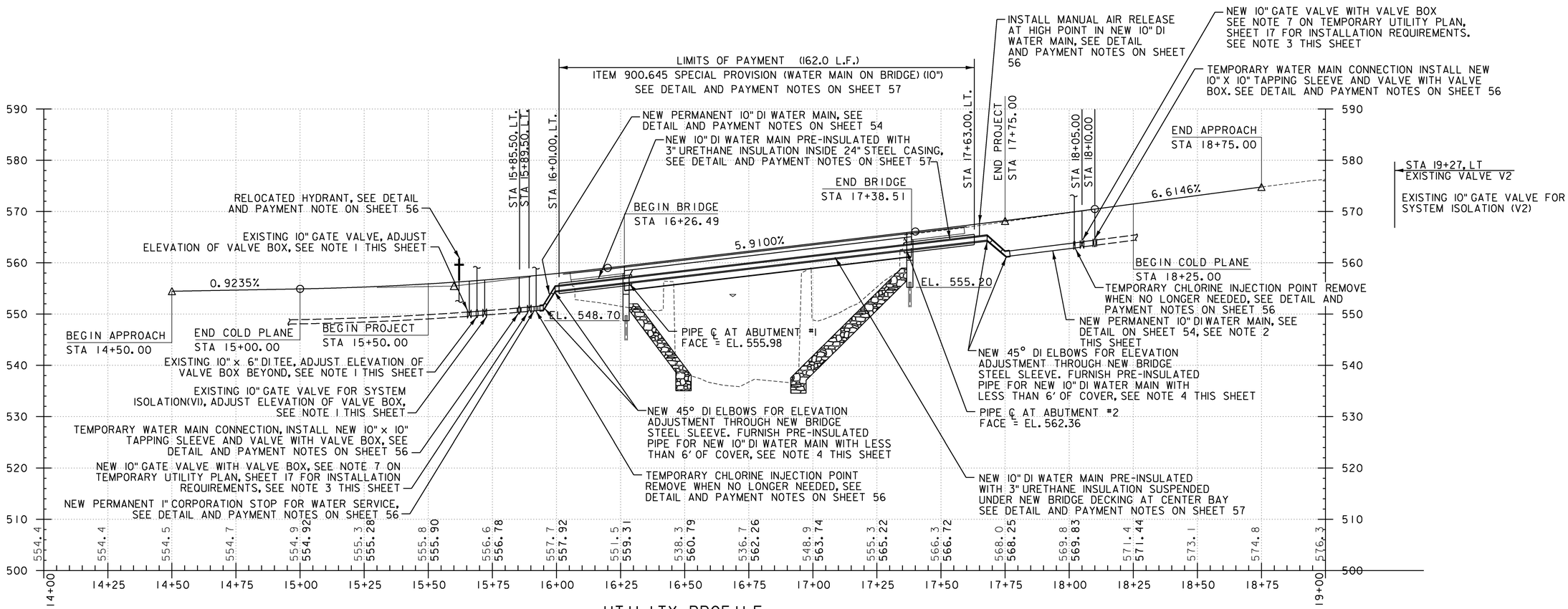

UTILITY PROFILE

HORIZONTAL SCALE: 1' = 20'
VERTICAL SCALE: 1" = 10'

NOTES:

1. PAYMENT FOR ADJUSTING ELEVATIONS OF VALVE BOXES WILL BE MADE UNDER ITEM 629.20.
2. PAYMENT WILL BE MADE UNDER ITEM 900.640, SPECIAL PROVISION (DUCTILE IRON PIPE, CEMENT LINED, ALL INCLUSIVE) (10").
3. PAYMENT WILL BE MADE UNDER ITEM 900.620, SPECIAL PROVISION (GATE VALVE WITH VALVE BOX, ALL INCLUSIVE) (10").
4. PAYMENT FOR ELBOWS AND PRE-INSULATED PIPE WILL BE MADE UNDER ITEM 900.640 SPECIAL PROVISION, (DUCTILE IRON PIPE, CEMENT LINED, ALL INCLUSIVE) (10").

APPROACH SLAB LOCATIONS:

BEGIN APPROACH SLAB, STATION: 16+06.48
END APPROACH SLAB, STATION: 16+26.48
BEGIN APPROACH SLAB, STATION: 17+38.52
END APPROACH SLAB, STATION: 17+58.52

NOTE:

GRADES SHOWN TO THE NEAREST TENTH ARE EXISTING GROUND ALONG ℄

GRADES SHOWN TO THE NEAREST HUNDREDTH ARE FINISH GRADE ALONG ℄

Stantec

PROJECT NAME:	ST JOHNSBURY
PROJECT NUMBER:	BRO 1447(30)
FILE NAME: z12j164profile-u.dgn	PLOT DATE: 10/14/2016
PROJECT LEADER: M. CHENETTE	DRAWN BY: D. HARRINGTON
DESIGNED BY: D. CAMPBELL	CHECKED BY: G. SANTY
UTILITY PROFILE	SHEET 14 OF 76

GENERAL TRAFFIC CONTROL NOTES

1. THE TRAFFIC CONTROL PLAN IS SCHEMATIC ONLY AND SHOULD BE USED AS A REFERENCE. THE CONTRACTOR SHALL DEVELOP AND IMPLEMENT SITE SPECIFIC TRAFFIC CONTROL PLAN FOR TEMPORARY BRIDGE PER THE LATEST VERSION OF THE MANUAL FOR UNIFORM TRAFFIC CONTROL DEVICES. THE CONTRACTOR SHALL SUBMIT TO THE PROJECT MANAGER AND ALLOW THE 14 CALENDAR DAYS TO REVIEW AND ACCEPT THE PROPOSED PLANS BEFORE THEY ARE TO BE IMPLEMENTED. NO WORK SHALL COMMENCE UNTIL THE TRAFFIC CONTROL AND PROTECTION PLAN HAS BEEN APPROVED.

2. ALL ITEMS REQUIRED TO PREPARE, SUBMIT AND IMPLEMENT THE CONTRACTOR'S PLAN, INCLUDING ANY NECESSARY REVISION TO THE PLAN WILL BE INLCUDED IN THE BID UNIT PRICE FOR ITEM 900.645 SPECIAL PROVISION (TRAFFIC CONTROL, ALL-INCLUSIVE). THE PAY ITEM INCLUDES, BUT IS NOT LIMITED TO, THE FOLLOWING:
   - TRAFFIC CONTROL PLAN
   - TEMPORARY TRAFFIC BARRIERS
   - ENERGY ABSORPTION ATTENUATORS
   - BARRICADES
   - DRUMS/CONES
   - ON PROJECT CONSTRUCTION SIGNING
   - TEMPORARY PAVEMENT MARKINGS
   - SAW CUTS
   - TEMPORARY DETOUR CONSTRUCTION INCLUDING: SUPERPAVE BITUMINOUS CONCRETE PAVEMENT TYPE IIIS, SUBBASE OF DENSE GRADED CRUSHED STONE, EARTHWORK, STONE FILL TYPE III, GEOTEXTILE UNDER STONE FILL, GRUBBING MATERIAL, AND ANY EROSION PREVENTION AND SLOPE STABILIZATION OF THE SLOPES OF THE DETOUR.

TRAFFIC CONTROL ITEMS NOT PAID FOR IN THE UNIT PRICE BID FOR ITEM 900.645 SPECIAL PROVISION (TRAFFIC CONTROL, ALL-INCLUSIVE), AND PAID FOR SEPARATELY ARE THE FOLLOWING:
   - ITEM 630.10 UNIFORMED TRAFFIC OFFICERS
   - ITEM 630.15 FLAGGERS
   - ITEM 641.15 PORTABLE CHANGEABLE MESSAGE SIGN
   - ITEM 678.40 TEMPORARY TRAFFIC SIGNAL SYSTEM

3. ACCESS TO ALL EXISTING SIDE ROADS, DRIVES AND PARKING AREAS SHALL BE MAINTAINED AT ALL TIMES DURING CONSTRUCTION.

4. DESIGN OF THE SIGNAL SUPPORTS AND ANY REQUIRED GUYING IS THE RESPONSIBILITY OF THE CONTRACTOR AND WILL BE PAID UNDER ITEM 678.40 TEMPORARY TRAFFIC SIGNAL SYSTEM.

5. SIGNAL TIMING / TIMING ADJUSTMENTS REQUESTED BY THE ENGINEER SHALL BE ACCOMPLISHED WITHIN A 48 HOUR PERIOD AND PAYMENT WILL BE INCIDENTAL TO ITEM 678.40, TEMPORARY TRAFFIC SIGNAL SYSTEM. THE ENGINEER SHALL MAKE SEVERAL TRIAL RUNS TO DETERMINE THE PROPER ALL-RED CLEARANCE INTERVAL.

6. SIGNAL FACES SHALL BE LED AND CONSIST OF 12" LENSES. (RED, YELLOW, AND GREEN).

7. THE BOTTOM OF THE HOUSING OF A SIGNAL FACE SUSPENDED OVER A ROADWAY SHALL NOT BE LESS THAN 16.5 FEET NOR MORE THAN 19 FEET ABOVE THE PAVEMENT GRADE AT THE CENTER OF THE ROADWAY. THE BOTTOM OF A SIGNAL FACE NOT MOUNTED OVER A ROADWAY SHALL NOT BE LESS THAN 8 FEET NOR MORE THAN 15 FEET ABOVE THE GROUND. CAUTION SHOULD BE USED TO INSURE COMPLIANCE WITH THE HEIGHT REQUIREMENTS IN THE EVENT THE NEW APPROACH GRADES DIFFER SIGNIFICANTLY FROM THE OLD ROAD GRADE.

8. SIGNAL FACES FOR ANY ONE APPROACH SHALL NOT BE LESS THAN 8 FEET APART MEASURED HORIZONTALLY BETWEEN CENTER FACES.

9. SIGNAL HEADS MAY BE HUNG ON A SPAN WIRE OR ON A CANTILEVER MAST ARM. AT LEAST ONE SIGNAL HEAD SHALL BE UNMISTAKABLY IN LINE WITH THE CENTER OF APPROACHING TRAFFIC AT ALL TIMES. THE SECOND SIGNAL HEAD MAY BE POST MOUNTED, LOCATED AT A DISTANCE OF NO GREATER THAN 14.5 FEET FROM THE CENTER OF THE APPROACH LANE WHEN THE STOP BAR IS 40 FEET FROM THE SIGNAL HEAD. CONSULT THE CURRENT EDITION OF THE M.U.T.C.D. FOR ADDITIONAL INFORMATION CONCERNING SIGNAL PLACEMENT.

10. THE SIGNAL SYSTEM SHALL CONSIST OF POLES, SIGNS AND POSTS, WARNING SIGNS, LUMINARIES, FLASHING BEACONS, ASSOCIATED PAVEMENT MARKINGS, AND SIGNAL EQUIPMENT TO PROVIDE FOR AN ADEQUATE DESIGN. IT ALSO INCLUDES PERMITS AND COSTS ASSOCIATED WITH PROVIDING ELECTRICAL POWER. ALL WORK WILL BE PAID UNDER ITEM 678.40 "TEMPORARY TRAFFIC SIGNAL SYSTEM."

11. INSTALL WIRING BETWEEN SIGNAL POLES TO PROVIDE FOR A SAFE INSTALLATION. ATTACHMENT TO UTILITY POLES TO BE COORDINATED BY THE CONTRACTOR WITH THE UTILITY COMPANY. PAYMENT WILL BE CONSIDERED INCIDENTAL TO ITEM 678.40, TEMPORARY TRAFFIC SIGNAL SYSTEM.

12. PLACE TEMPORARY POLES BEHIND GUARDRAIL WHERE POSSIBLE, OR OUTSIDE CLEAR ZONE.

13. POLES SUPPORTING SPAN WIRES AND/OR MAST ARMS SHALL BE ADEQUATELY BRACED OR GUYED AND SHALL BE PLACED SO AS NOT TO CREATE A HAZARD TO THE TRAVELING PUBLIC.

14. ALL TEMPORARY SIGNAL EQUIPMENT, SIGNS, ETC., SHALL BELONG TO THE CONTRACTOR AT THE END OF THE PROJECT AND THE CONTRACTOR SHALL BE RESPONSIBLE FOR THEIR REMOVAL INCLUDING ANY TEMPORARY PAVEMENT MARKINGS, UTILITY POLES, WIRES, ETC. PAYMENT WILL BE CONSIDERED INCIDENTAL TO ITEM 678.40, TEMPORARY TRAFFIC SIGNAL SYSTEM.

15. LUMINAIRES SHALL BE INSTALLED AT EACH OF THE APPROACHES TO ADEQUATELY LIGHT THE STOP BAR AREAS. HIGH PRESSURE SODIUM OR L.E.D. LUMINAIRES ARE ACCEPTABLE FORMS OF LAMPS. THE MOUNTING HEIGHT FOR LUMINAIRES SHALL BE DETERMINED BY THE CONTRACTOR. ILLUMINANCE SHALL BE MEASURED AT NIGHTTIME AFTER INSTALLATION AND AT EACH STOP BAR SHALL BE NO LESS THAN 1.0 FOOT-CANDLES AND NOT TO EXCEED 2.0 FOOT-CANDLES. PAYMENT WILL BE CONSIDERED INCIDENTAL TO ITEM 678.40, TEMPORARY TRAFFIC SIGNAL SYSTEM.

16. STOP BARS SHALL BE LOCATED A MINIMUM OF 40' AND A MAXIMUM OF 120' FROM THE NEAREST SIGNAL HEAD.

17. ALL ELECTRIC WORK SHALL MEET THE REQUIREMENTS OF THE NATIONAL ELECTRICAL CODE AND STATE INSPECTOR.

18. ALL STOP SIGNS AND ANY TRAFFIC SIGNS MADE IRRELEVANT DUE TO THE TEMPORARY SIGNAL SHALL BE COVERED DURING OPERATION OF THE TEMPORARY SIGNAL, OR AT THE DISCRETION OF THE ENGINEER. THE COSTS OF COVERING AND UNCOVERING THESE SIGNS WILL BE CONSIDERED INCIDENTAL TO ITEM 900.645 SPECIAL PROVISION (TRAFFIC CONTROL, ALL-INCLUSIVE).

19. THE CONTRACTOR SHALL BE RESPONSIBLE FOR DETERMINING SIGNAL PHASING. THE CONTRACTOR SHALL SUBMIT PHASING DIAGRAM TO THE ENGINEER FOR APPROVAL. THE CONTRACTOR SHALL MAKE SIGNALS OPERATIONAL ONLY AFTER RECEIVING APPROVAL OF THE PHASING DIAGRAM BY THE ENGINEER. DEVELOPMENT OF THE PHASING DIAGRAM WILL BE CONSIDERED INCIDENTAL TO ITEM 678.40, TEMPORARY TRAFFIC SIGNAL SYSTEM.

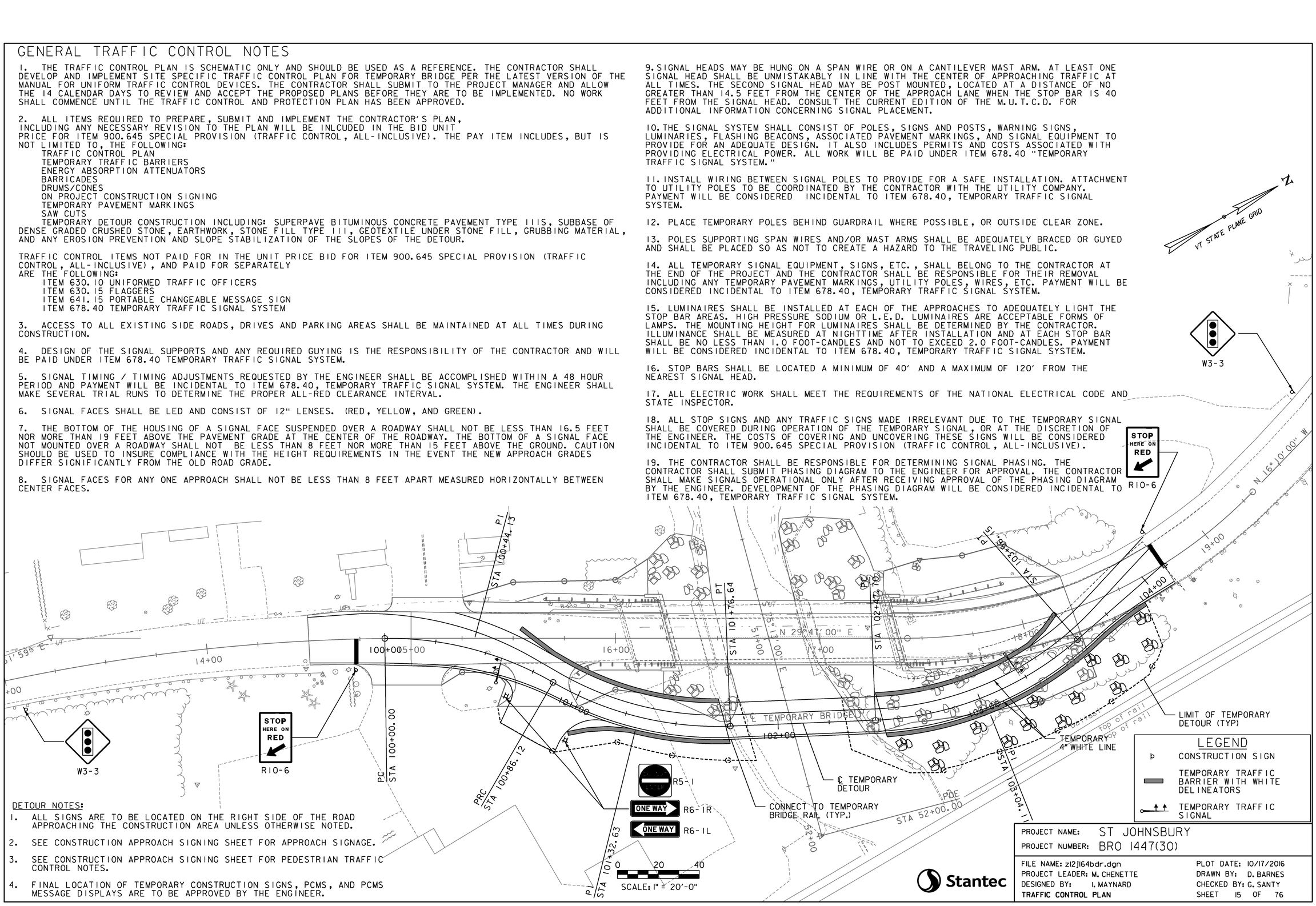

LEGEND

- CONSTRUCTION SIGN
- TEMPORARY TRAFFIC BARRIER WITH WHITE DELINEATORS
- TEMPORARY TRAFFIC SIGNAL

DETOUR NOTES:

1. ALL SIGNS ARE TO BE LOCATED ON THE RIGHT SIDE OF THE ROAD APPROACHING THE CONSTRUCTION AREA UNLESS OTHERWISE NOTED.
2. SEE CONSTRUCTION APPROACH SIGNING SHEET FOR APPROACH SIGNAGE.
3. SEE CONSTRUCTION APPROACH SIGNING SHEET FOR PEDESTRIAN TRAFFIC CONTROL NOTES.
4. FINAL LOCATION OF TEMPORARY CONSTRUCTION SIGNS, PCMS, AND PCMS MESSAGE DISPLAYS ARE TO BE APPROVED BY THE ENGINEER.

Stantec

PROJECT NAME: ST JOHNSBURY
PROJECT NUMBER: BRO 1447(30)

FILE NAME: z12j164bdr.dgn
PROJECT LEADER: M. CHENETTE
DESIGNED BY: I. MAYNARD
TRAFFIC CONTROL PLAN

PLOT DATE: 10/17/2016
DRAWN BY: D. BARNES
CHECKED BY: G. SANTY
SHEET 15 OF 76

PEDESTRIAN TEMPORARY TRAFFIC CONTROL NOTES:

1. THE CONTRACTOR SHALL MAINTAIN PEDESTRIAN THROUGH MOVEMENTS FROM ONE END OF THE CONSTRUCTION AREA TO THE OTHER, ON AT LEAST ONE SIDE OF THE STREET DURING CONSTRUCTION. ANY SIDEWALK CLOSURES SHALL MEET THE REQUIREMENTS OF THE MUTCD, PART 6.

2. PEDESTRIAN ACCESS SHALL BE PROVIDED TO ALL ADJACENT PROPERTIES, BUILDINGS, RESIDENCES AND COMMERCIAL PROPERTIES AT ALL TIMES. THIS MAY INCLUDE TEMPORARY WALKWAYS SPANNING THE CONSTRUCTION AREA.

3. IF SIDEWALKS ARE CLOSED, A TEMPORARY PEDESTRIAN ACCESS ROUTE (TPAR) SHALL BE PROVIDED ON THE SAME SIDE OF THE ROAD AS THE CLOSED SIDEWALK, IF POSSIBLE. SIGNS AND BARRICADES SHALL BE USED TO PROVIDE ADVANCE NOTICE OF THE CLOSURE AND THE ROUTE OF ANY PEDESTRIAN DETOURS. THE TPAR SHALL HAVE A MINIMUM UNOBSTRUCTED WIDTH OF 4 FEET. IF THE TPAR IS LESS THAN 5 FEET IN WIDTH, A 5 FOOT BY 5 FOOT PASSING SPACE SHOULD BE PROVIDED AT LEAST EVERY 200 FEET. THE SURFACE OF THE TPAR SHALL BE SMOOTH AND CONTINUOUS FOR THE LENGTH OF THE TPAR. THE TPAR SHALL MAINTAIN THE SAME LEVEL OF ACCESSIBILITY AND DETECTABILITY AS THE FACILITY THAT IS BEING CLOSED. THE TPAR SHALL NOT LEAD PEDESTRIANS INTO CONFLICTS WITH VEHICLES, EQUIPMENT, OR CONSTRUCTION OPERATIONS.

4. IF THE TPAR IS ADJACENT TO MOVING TRAFFIC, CONSTRUCTION OPERATIONS/EQUIPMENT, OR DROP-OFFS, THEN CRASH WORTHY CHANNELIZING DEVICES THAT MEET THE REQUIREMENTS OF THE MUTCD SHALL BE USED.

5. THE CONTRACTOR SHALL NOT STORE OR PLACE ANY CONSTRUCTION MATERIALS, EQUIPMENT OR SIGNS IN THE PEDESTRIAN PATH OF TRAVEL.

6. THE CONTRACTOR'S OPERATIONS SHALL NOT OCCUPY SIDEWALKS EXCEPT WHERE PROPER PROTECTION AND TPAR HAVE BEEN PROVIDED.

7. THE CONTRACTOR SHALL PROVIDE A TEMPORARY PEDESTRIAN TRAFFIC CONTROL PLAN FOR REVIEW AND WRITTEN APPROVAL A MINIMUM OF THREE WEEKS BEFORE SUCH PLAN IS IMPLEMENTED. THIS PLAN SHALL DETAIL THE CONSTRUCTION PHASING AND SCHEDULE AND THE SPECIFIC METHODS OF MAINTAINING SAFE PEDESTRIAN ACCESS THROUGHOUT THE CONSTRUCTION AREA. THIS PLAN SHALL PROVIDE THE LOCATION AND DETAILS OF TEMPORARY CONSTRUCTION SIGNING, MARKINGS, PCMS'S, BARRICADES, CHANNELIZING DEVICES, TPAR'S AND METHODS TO MAINTAIN ACCESS TO ADJACENT PROPERTIES, BUSINESSES, RESIDENCES, ETC. PAYMENT FOR DEVELOPING, IMPLEMENTING, AND MAINTAINING THE TEMPORARY PEDESTRIAN TRAFFIC CONTROL PLAN WILL BE INCLUDED IN THE UNIT PRICE BID FOR CONTRACT ITEM 900.645 SPECIAL PROVISION(TRAFFIC CONTROL, ALL-INCLUSIVE)

STARTING 1 WEEK PRIOR TO CLOSURE

MESSAGE 1	MESSAGE 2	
MAIN ST	MMMM DD	(DATE)*
BRIDGE	TO	
WORK	MMMM DD	(DATE)*

* - DATE SHALL BE SPELLED OUT (I.E. JUNE 10 NOT 6/10)

MESSAGES FOR PORTABLE CHANGEABLE MESSAGE SIGN

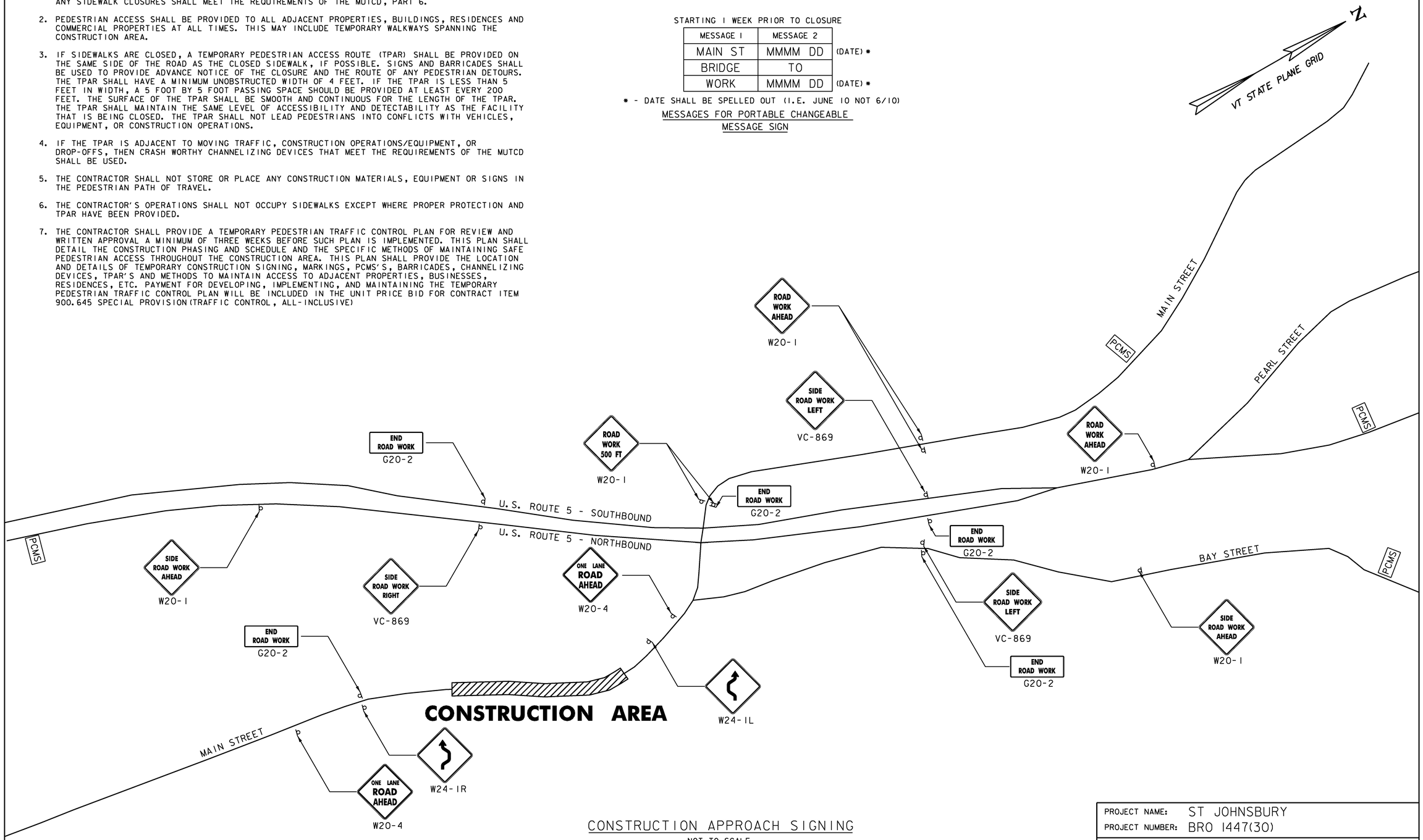

CONSTRUCTION APPROACH SIGNING

NOT TO SCALE

SEE VTrans STANDARD T-1, T-10, T-30 FOR SIGN PLACEMENT.

Stantec

PROJECT NAME:	ST JOHNSBURY
PROJECT NUMBER:	BRO 1447(30)
FILE NAME: z12j164cas.dgn	PLOT DATE: 9/30/2016
PROJECT LEADER: M. CHENETTE	DRAWN BY: I. MAYNARD
DESIGNED BY: I. MAYNARD	CHECKED BY: G. SANTY
CONSTRUCTION APPROACH SIGNING	SHEET 16 OF 76

TEMPORARY WATER MAIN RELOCATION NOTES:

1. THE PROPOSED TEMPORARY WATER MAIN PLAN CONFIGURATION DOES NOT, AND IS NOT INTENDED TO, COVER ALL REQUIREMENTS FOR THE TEMPORARY WATER MAIN RELOCATION AND IS PROVIDED TO ASSIST THE CONTRACTOR IN DEVELOPING HIS COMPREHENSIVE WATER MAIN RELOCATION PLAN. THE FOLLOWING IS INTENDED TO BE A SUGGESTED CONSTRUCTION SEQUENCE FOR THE WATER MAIN RELOCATION:

   - CONSTRUCT TEMPORARY BRIDGE LOCATED ON THE DOWNSTREAM SIDE OF THE EXISTING STRUCTURE.
   - CONSTRUCT AN APPROXIMATELY 290' LONG, TEMPORARY 10" DI WATER MAIN SUPPORTED UNDERNEATH THE TEMPORARY BRIDGE.
   - CONNECT THE TEMPORARY 10" DI WATER MAIN INTO THE EXISTING 10" DI WATER MAIN VIA TWO LIVE PRESSURE TAPS WITH 10" TAPPING SLEEVES AND TAPPING VALVES (ONE TAPPING SLEEVE AND TAPPING VALVE EACH SIDE OF CROSSING).
   - PRESSURE TEST, FLUSH, AND DISINFECT THE TEMPORARY 10" DI WATER MAIN.
   - ISOLATE THE EXISTING WATER MAIN AND INSTALL ONE, NEW 10" IN-LINE GATE VALVE WITH PLUG ON EACH SIDE OF THE EXISTING BRIDGE. EXISTING WATER MAIN CROSSING TO BE DE-PRESSURIZED DURING INSTALLATION OF THESE TWO, NEW 10" IN-LINE GATE VALVES. INSTALLATION TIME PERIOD TO BE MINIMIZED (FOUR HOUR MAX. ALLOWABLE). COORDINATE WATER MAIN SHUTDOWN WITH ST. JOHNSBURY DEPARMENT OF PUBLIC WORKS.
   - REMOVE EXISTING BRIDGE AND ASSOCIATED EXISTING 10" WATER MAIN.
   - CONSTRUCT NEW BRIDGE WITH NEW 10" DI WATER MAIN SUPPORTED ON THE UNDERSIDE OF THE STRUCTURE.
   - PRESSURE TEST, FLUSH, AND DISINFECT THE NEW 10" DI WATER MAIN.
   - PRESSURIZE THE NEW 10" DI WATER MAIN AND DISCONNECT THE TEMPORARY WATER MAIN.
   - REMOVE TEMPORARY BRIDGE INCLUDING TEMPORARY WATER MAIN.

2. ALL TEMPORARY DUCTILE IRON WATER MAIN PIPE SHALL BE CLASS 52.

3. TEMPORARY DUCTILE IRON WATER MAIN PIPE FOR BRIDGE CROSSING SHALL BE RESTRAINED JOINT PIPE.

4. ALL TEMPORARY DUCTILE IRON PIPE INSTALLED UNDER THE TEMPORARY BRIDGE AND INSTALLED WITH LESS THAN 6' OF COVER SHALL BE PRE-INSULATED WITH 3" OF URETHANE INSULATION.

5. SUBMIT FABRICATION DRAWINGS, INCLUDING PLAN, DETAILS, AND A SEQUENCE OF CONSTRUCTION, IN ACCORDANCE WITH SECTION 105 FOR ALL TEMPORARY WATER MAIN AND APPURTENANCES. PIPE SUPPORTS FOR SUPPORTING THE TEMPORARY WATER MAIN UNDER THE TEMPORARY BRIDGE SHALL INCLUDE DESIGN CALCULATIONS AND SHALL BE STAMPED BY A PROFESSIONAL STRUCTURAL OR CIVIL ENGINEER, REGISTERED IN THE STATE OF VERMONT.

6. PAYMENT FOR NEW 10" DI TEMPORARY WATER MAIN AND ALL APPURTENANCES, INCLUDING REMOVAL OF EXISTING 10" DI WATER MAIN, ABANDONED 8" WATER MAIN, AND TEMPORARY 10" WATER MAIN, WILL BE INCLUDED UNDER ITEM 629.42, TRANSFER TO NEW SYSTEM, WATER SYSTEM.

7. UPON COMPLETE INSTALLATION OF THE NEW 10" DI TEMPORARY WATER MAIN INCLUDING FLUSHING, PRESSURE TESTING, AND DISINFECTION, CONTRACTOR SHALL CUT THE EXISTING 10" DI WATER MAIN AND INSTALL A NEW PERMANENT 10" GATE VALVE WITH VALVE BOX, END CAP, AND THRUST RESTRAINT AT EACH CUT END. COORDINATE SYSTEM SHUT DOWN AND ISOLATION BETWEEN EXISTING VALVE #1 AND VALVE #2 WITH THE TOWN OF ST. JOHNSBURY DEPARTMENT OF PUBLIC WORKS AND THE ENGINEER PRIOR TO INSTALLATION. A MAXIMUM SHUT DOWN PERIOD OF 4 HOURS WILL BE ALLOWED TO PERFORM INSTALLATION OF BOTH NEW GATE VALVES AND END CAPS.

8. ALL TEMPORARY RELATED WATER MAIN PIPING AND APPURTENANCES SHALL BE REMOVED AFTER THE NEW PERMANENT WATER MAIN IS PLACED INTO SERVICE.

ITEM 900.620 SPECIAL PROVISION
(TAPPING SLEEVE AND VALVE WITH VALVE BOX, ALL INCLUSIVE) (10"X10")

STA 15+85, LT.
STA 18+10, LT.

ITEM 900.620 SPECIAL PROVISION
(GATE VALVE WITH VALVE BOX, ALL INCLUSIVE) (10")

STA 15+90, LT.
STA 18+05, LT.

WATER SERVICE:

ITEM 900.620 SPECIAL PROVISION
(EXTENSION SERVICE BOX AND CURB STOP, ALL INCLUSIVE) (1")

STA 16+08, RT.

ITEM 900.620 SPECIAL PROVISION
(CORPORATION STOP, ALL INCLUSIVE) (1")

STA 15+92, LT.

ITEM 900.640 SPECIAL PROVISION
(SEAMLESS COPPER WATER TUBE, ALL INCLUSIVE) (1")

STA 15+92, LT. - STA 16+08, RT.

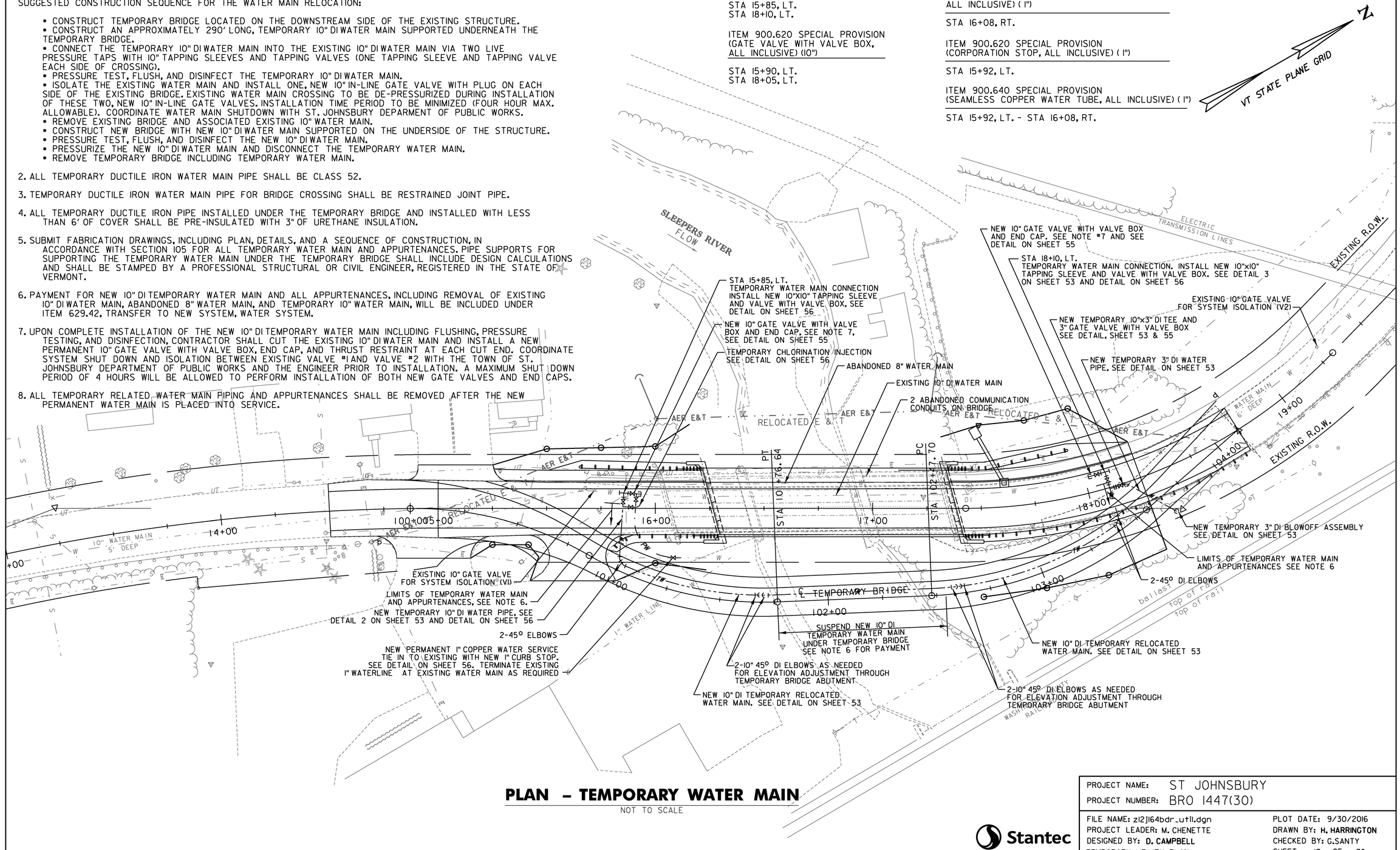

PLAN – TEMPORARY WATER MAIN

NOT TO SCALE

Stantec

PROJECT NAME:	ST JOHNSBURY
PROJECT NUMBER:	BRO 1447(30)
FILE NAME: z12j164bdr_util.dgn	PLOT DATE: 9/30/2016
PROJECT LEADER: M. CHENETTE	DRAWN BY: H. HARRINGTON
DESIGNED BY: D. CAMPBELL	CHECKED BY: G.SANTY
TEMPORARY UTILITY PLAN	SHEET 17 OF 76

SANITARY SEWER
ITEM 604.42 CHANGING ELEVATION OF SEWER MANHOLES

STA 15+38, RT.

WATER
ITEM 629.20 ADJUST ELEVATION OF VALVE BOX

STA 15+66, LT.
STA 15+68, LT.
STA 15+72, LT

ITEM 629.29. RELOCATE HYDRANT

STA 15+62, LT.

ITEM 900.620, SPECIAL PROVISION
(MANUAL AIR RELEASE, ALL INCLUSIVE)

STA 17+65, LT.

ITEM 900.620, SPECIAL PROVISION
(GATE VALVE WITH VALVE BOX, ALL INCLUSIVE) (10")

STA 15+90, LT.
STA 18+05, LT.

ITEM 900.620, SPECIAL PROVISION
(TAPPING SLEEVE AND VALVE WITH VALVE BOX, ALL INCLUSIVE) (10" X 10")

STA 15+85, LT.
STA 18+10, LT.

ITEM 900.640, SPECIAL PROVISION
(DUCTILE IRON PIPE, CEMENT LINED, ALL INCLUSIVE) (6")

STA 15+68, 10' LT. - STA 15+69, 21' LT.

ITEM 900.640, SPECIAL PROVISION
(DUCTILE IRON PIPE, CEMENT LINED, ALL INCLUSIVE) (10")

STA 15+90, LT. - STA 16+01, LT.
STA 17+63, LT. - STA 18+05, LT.

ITEM 900.645, SPECIAL PROVISION
(WATER MAIN ON BRIDGE) (10")

STA 16+01, LT. - STA 17+63, LT.

PERMANENT WATER MAIN RELOCATION NOTES:

1. ALL PERMANENT DUCTILE IRON WATER MAIN PIPE SHALL BE CLASS 52.

2. PERMANENT DUCTILE IRON WATER MAIN PIPE FOR BRIDGE CROSSING SHALL BE RESTRAINED JOINT PIPE.

3. ALL PERMANENT DUCTILE IRON PIPE INSTALLED UNDER THE PERMANENT BRIDGE, WITHIN STEEL SLEEVES LOCATED BENEATH THE BRIDGE APPROACH SLABS, INCLUDING VERTICAL TRANSITIONS INTO AND OUT OF THE SLEEVES, SHALL BE PRE-INSULATED WITH 3" OF URETHANE INSULATION.

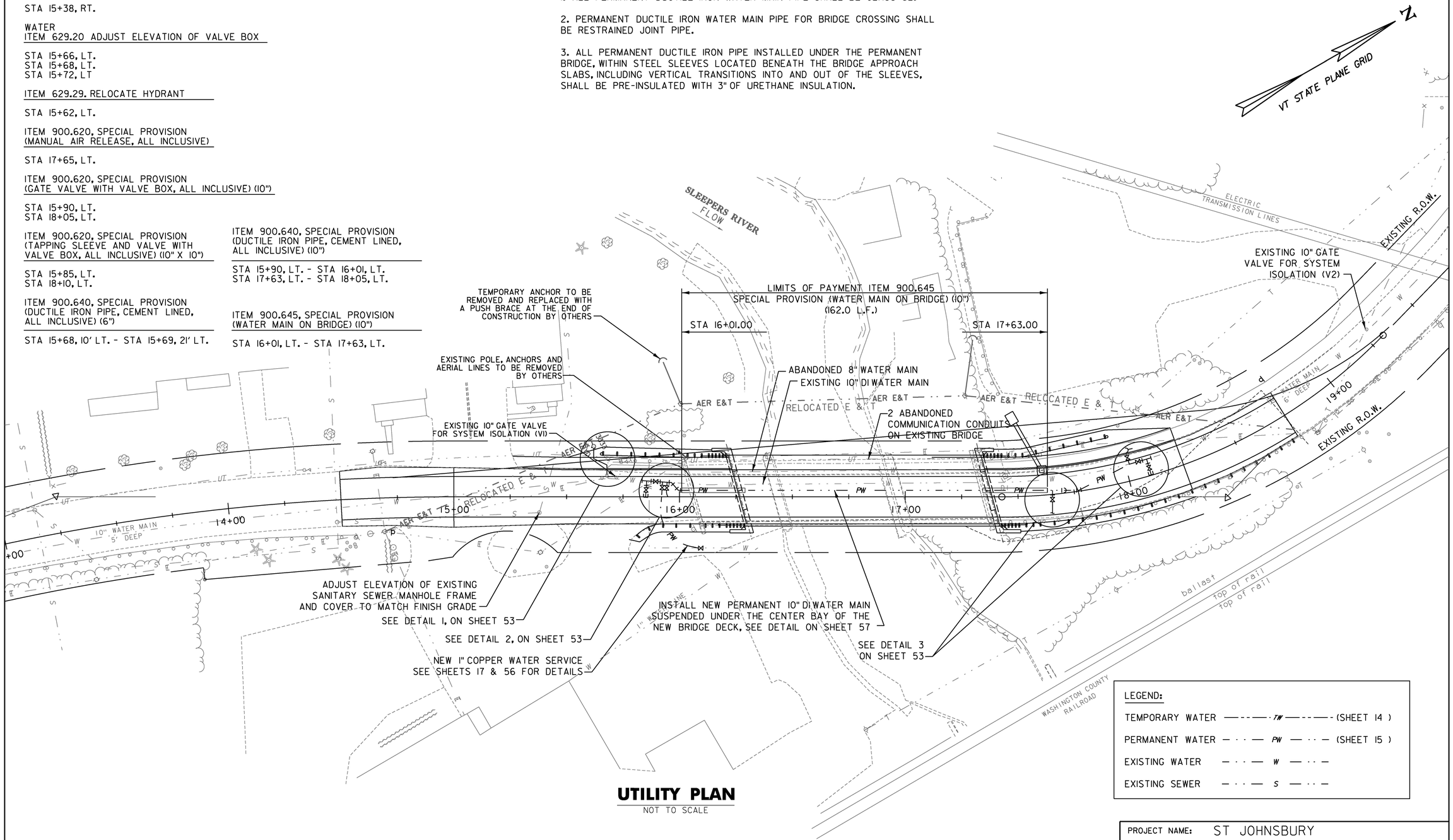

UTILITY PLAN

NOT TO SCALE

LEGEND:

TEMPORARY WATER	TW (SHEET 14)
PERMANENT WATER	PW (SHEET 15)
EXISTING WATER	W
EXISTING SEWER	S

Stantec

PROJECT NAME:	ST JOHNSBURY
PROJECT NUMBER:	BRO 1447(30)
FILE NAME: z12j164bdr_util.dgn	PLOT DATE: 9/30/2016
PROJECT LEADER: M. CHENETTE	DRAWN BY: H. HARRINGTON
DESIGNED BY: D. CAMPBELL	CHECKED BY: G. SANTY
UTILITY PLAN	SHEET 18 OF 76

ITEM 646.410 - DURABLE 4 INCH YELLOW LINE
STA. 14+50.0 - 18+75, LT. & RT. (DOUBLE CENTERLINE)

ITEM 675.50 - REMOVING SIGNS
AS SHOWN - 4

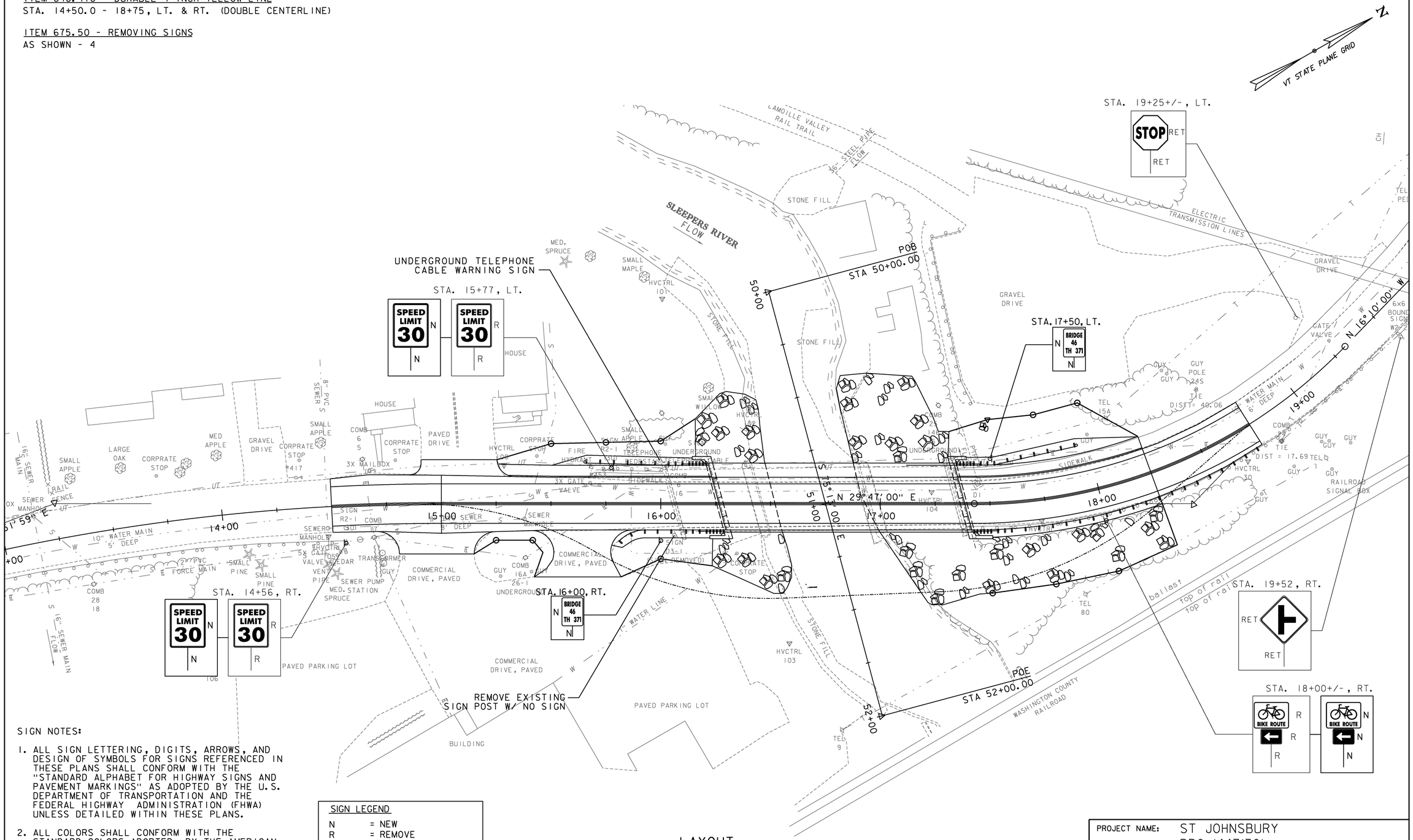

SIGN NOTES:

1. ALL SIGN LETTERING, DIGITS, ARROWS, AND DESIGN OF SYMBOLS FOR SIGNS REFERENCED IN THESE PLANS SHALL CONFORM WITH THE "STANDARD ALPHABET FOR HIGHWAY SIGNS AND PAVEMENT MARKINGS" AS ADOPTED BY THE U.S. DEPARTMENT OF TRANSPORTATION AND THE FEDERAL HIGHWAY ADMINISTRATION (FHWA) UNLESS DETAILED WITHIN THESE PLANS.
2. ALL COLORS SHALL CONFORM WITH THE STANDARD COLORS ADOPTED BY THE AMERICAN ASSOCIATION OF STATE HIGHWAY AND TRANSPORTATION OFFICIALS (AASHTO) AND APPROVED BY FHWA UNLESS OTHERWISE NOTED.
3. ALL SHEETING SHALL BE TYPE III MINIMUM.

SIGN LEGEND	
N	= NEW
R	= REMOVE
R&S	= REMOVE & SALVAGE
S	= SALVAGE SIGN
RET	= RETAIN
B-B	= BACK TO BACK

LAYOUT

0 20 40

SCALE: 1" = 20'-0"

Stantec

PROJECT NAME:	ST JOHNSBURY
PROJECT NUMBER:	BRO 1447(30)
FILE NAME: z12J164bdr.dgn	PLOT DATE: 9/30/2016
PROJECT LEADER: M. CHENETTE	DRAWN BY: D. BARNES
DESIGNED BY: I. MAYNARD	CHECKED BY: G. SANTY
SIGNING & PAVEMENT MARKINGS PLAN	SHEET 19 OF 76

STATE OF VERMONT
AGENCY OF TRANSPORTATION

TRAFFIC SIGN SUMMARY SHEET

MILEMARKER, STATION, OR SIGN NUMBER	SIGN LEGEND	SIGN DIMENSIONS EA	WIDTH (in)	HEIGHT (in)	NEW & SALVAGED SIGNS "A"	"B"	SALV SIGN	SALV TIS	EXIST POST RETAIN	EXIST POST SALVAGE	NEW SIGN POSTS NO. OF POSTS	FLANGED CHANNEL lb/ft 1.12	2.0	3.0	SQUARE STEEL (in) 1.75 lb/ft 1.88	2.0 lb/ft 2.42	2.5 lb/ft 3.35	ANCHOR	SLEEVE	TUBULAR ALUMINUM Ø (in) 3.0 lb/ft 1.3	4.0 lb/ft 1.7	4.0 MOD lb/ft 1.7	TUBULAR STEEL Ø (in) FOUND-ATION	3.0 lb/ft 7.6	3.5 lb/ft 9.0	4.0 lb/ft 10.8	5.0 lb/ft 14.6	W-SHAPE STEEL FTG. SIZE 24"	30"	WEIGHT	POST SIZE	SIGN FRAME REQUIRED	REMARKS	SIGN DETAIL DETAIL IN SHSM BOOK	DETAIL ON SHEET NUMBER	STD. SHEET NUMBER
T.H. 371																																				
14+56, RT	SPEED LIMIT 30	1	24	30	5.00						1					X		X																R2-1	X		
15+77, LT	SPEED LIMIT 30	1	24	30	5.00						1					X		X																R2-1	X		
16+00, RT	BRIDGE 46 TH 371	1	6	10	0.42						1				X			X																VR-701			T-42
17+50, LT	BRIDGE 46 TH 371	1	6	10	0.42						1				X			X																VR-701			T-42
18+00, +/- RT	BIKE ROUTE	1 1	24 12	18 9	3.00 0.75						1					X		X																D11-1 M6-1 (GREEN ON WHITE)	X X		
TOTALS		SF 14.59			SF	EA.	SF					FT	FT	FT	FT 16.0	FT 45.0	FT 61	EA	LB	LB	LB	LB	EA.	LB	LB	LB	LB	EA.	EA.	LB						

"SHSM"-STANDARD HIGHWAY SIGNS AND MARKINGS

FINAL POST LENGTHS ARE TO BE DETERMINED IN THE FIELD. POST SIZES ARE COMPUTED BASED ON INFORMATION FURNISHED ON THE STANDARD SHEETS AND THE VTRANS "SIGN POST DESIGN GUIDELINE."

Stantec

PROJECT NAME: ST JOHNSBURY
PROJECT NUMBER: BRO 1447(30)

FILE NAME: z12J164tss.dgn
PROJECT LEADER: M. CHENETTE
DESIGNED BY: I. MAYNARD
TRAFFIC SIGN SUMMARY SHEET

PLOT DATE: 9/30/2016
DRAWN BY: D. BARNES
CHECKED BY: G. SANTY
SHEET 20 OF 76

SOIL CLASSIFICATION

AASHTO	
A1	Gravel and Sand
A3	Fine Sand
A2	Silty or Clayey Gravel and Sand
A4	Silty Soil - Low Compressibility
A5	Silty Soil - Highly Compressible
A6	Clayey Soil - Low Compressibility
A7	Clayey Soil - Highly Compressible

ROCK QUALITY DESIGNATION

R.Q.D. (%)	ROCK DESCRIPTION
<25	Very Poor
25 to 50	Poor
51 to 75	Fair
76 to 90	Good
>90	Excellent

SHEAR STRENGTH

UNDRAINED SHEAR STRENGTH IN P.S.F.	CONSISTENCY
<250	Very Soft
250-500	Soft
500-1000	Med. Stiff
1000-2000	Stiff
2000-4000	Very Stiff
>4000	Hard

CORRELATION GUIDE OF "N" TO DENSITY/CONSISTENCY

DENSITY (GRANULAR SOILS)		CONSISTENCY (COHESIVE SOILS)	
N	DESCRIPTIVE TERM	N	DESCRIPTIVE TERM
<5	Very Loose	<2	Very Soft
5-10	Loose	2-4	Soft
11-24	Med. Dense	5-8	Med. Stiff
25-50	Dense	9-15	Stiff
>50	Very Dense	16-30	Very Stiff
		31-60	Hard
		>60	Very Hard

COMMONLY USED SYMBOLS

▼	Water Elevation
⊗	Standard Penetration Boring
⊕	Auger Boring
⊙	Rod Sounding
S	Sample
N	Standard Penetration Test Blow Count Per Foot For: 2" O.D. Sampler 1 3/8" I.D. Sampler Hammer Weight Of 140 Lbs. Hammer Fall Of 30"
VS	Field Vane Shear Test
US	Undisturbed Soil Sample
B	Blast
DC	Diamond Core
MD	Mud Drill
WA	Wash Ahead
HSA	Hollow Stem Auger
AX	Core Size 1 1/8"
BX	Core Size 1 5/8"
NX	Core Size 2 1/8"
M	Double Tube Core Barrel Used
LL	Liquid Limit
PL	Plastic Limit
PI	Plasticity Index
NP	Non Plastic
w	Moisture Content (Dry Wgt. Basis)
D	Dry
M	Moist
MTW	Moist To Wet
W	Wet
Sat	Saturated
Bo	Boulder
Gr	Gravel
Sa	Sand
Si	Silt
Cl	Clay
HP	Hardpan
Le	Ledge
NLTD	No Ledge To Depth
CNPF	Can Not Penetrate Further
TLOB	To Ledge Or Boulder
NR	No Recovery
Rec.	Recovery
%Rec.	Percent Recovery
RQD	Rock Quality Designation
CBR	California Bearing Ratio
<	Less Than
>	Greater Than
R	Refusal (N > 100)

COLOR

blk	Black	pnk	Pink
bl	Blue	pu	Purple
brn	Brown	rd	Red
dk	Dark	tn	Tan
gry	Gray	wh	White
gn	Green	yel	Yellow
lt	Light	mltc	Multicolored
or	Orange		

DEFINITIONS (AASHTO)

BEDROCK (LEDGE) - Rock in its native location of indefinite thickness.

BOULDER - A rock fragment with an average dimension > 12 inches.

COBBLE - Rock fragments with an average dimension between 3 and 12 inches.

GRAVEL - Rounded particles of rock < 3" and > 0.0787" (#10 sieve).

SAND - Particles of rock < 0.0787" (#10 sieve) and > 0.0029" (#200 sieve).

SILT - Soil < 0.0029" (#200 sieve), non or slightly plastic and exhibits no strength when air-dried.

CLAY - Fine grained soil, exhibits plasticity when moist and considerable strength when air-dried.

VARVED - Alternate layers of silt and clay.

HARDPAN - Extremely dense soil, cemented layer, not softened when wet.

MUCK - Soft organic soil (containing > 10% organic material.

MOISTURE CONTENT - Weight of water divided by dry weight of soil.

FLOWING SAND - Granular soil so saturated (loose) that it flows into drill casing during extraction of wash rod.

STRIKE - Angle from magnetic north to line of intersection of bed with a horizontal plane.

DIP - Inclination of bed with a horizontal plane.

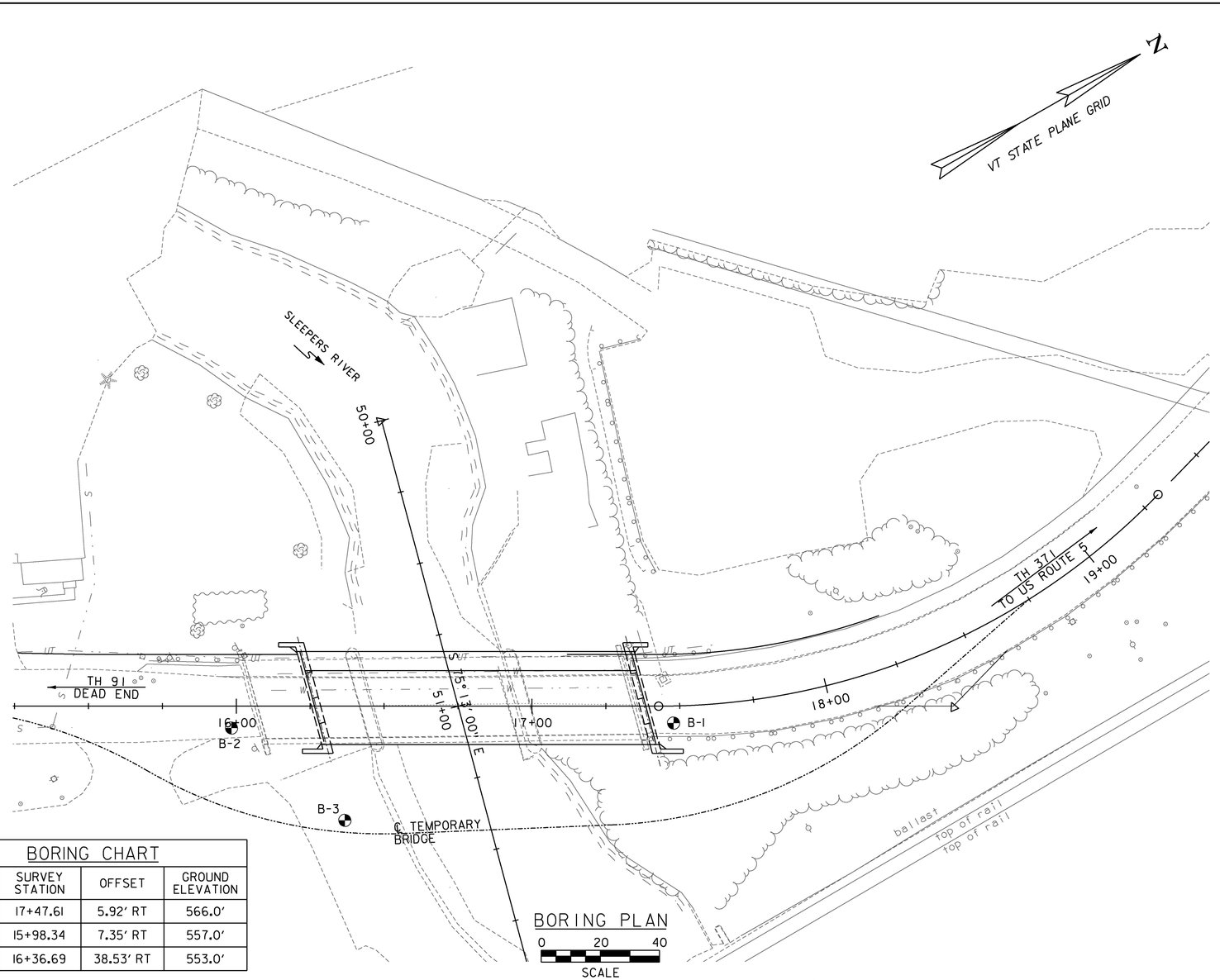

BORING PLAN

0 20 40

SCALE

BORING CHART			
BORING NUMBER	SURVEY STATION	OFFSET	GROUND ELEVATION
B-1	17+47.61	5.92' RT	566.0'
B-2	15+98.34	7.35' RT	557.0'
B-3	16+36.69	38.53' RT	553.0'

GENERAL NOTES

1. The subsurface explorations shown herein were made in July 1986, and Nov-Dec 2004 by VTRANS.
2. Soil and rock classifications, properties and descriptions are based on engineering interpretation from available subsurface information and may not necessarily reflect actual variations in subsurface conditions that may be encountered between individual boring or sample locations.
3. Observed water levels and/or conditions indicated are as recorded at the time of exploration and may vary according to the prevailing rainfall, methods of exploration and other factors.
4. Engineering judgement was exercised in preparing the subsurface information presented herein. Analysis and interpretation of subsurface data was performed and interpreted for Agency design and estimating purposes. Presentation of the information in the Contract is intended to provide the Contractor access to the same data available to the Agency. The subsurface information is presented in good faith and is not intended as a substitute for personal investigation, independent interpretation, independent analysis or judgement by the Contractor.
5. Pictorial structure details shown on the boring plan layout or soils profile are for illustrative purposes only and may not accurately portray final contract details.
6. Terminology used on boring logs to describe the hardness, degree of weathering, and spacing of fractures, joints and other discontinuities in the bedrock is defined in the AASHTO Manual on Subsurface Investigations, 1988.
7. Northing and Easting coordinates are shown in Vermont State Plane Grid North American Datum 1983 in meters and survey feet.

Stantec

LEGEND:

BRIDGE BORING

PROJECT NAME: ST JOHNSBURY
PROJECT NUMBER: BRO 1447(30)

FILE NAME: z12j164bdr_bor_pl.dgn
PROJECT LEADER: M. CHENETTE
DESIGNED BY: J. HUNGERFORD
BORING PLAN

PLOT DATE: 9/30/2016
DRAWN BY: L. BUXTON
CHECKED BY: M. CHENETTE
SHEET 21 OF 76

STATE OF VERMONT
AGENCY OF TRANSPORTATION
MATERIALS & RESEARCH SECTION
SUBSURFACE INFORMATION

BORING LOG

St. Johnsbury
BRO 1447(30)
TH 371, Bridge #46 Over Sleepers River

Boring No.: **B-1**
Page No.: 1 of 3
Pin No.: 12J164
Checked By: TAD

Boring Crew: NH Boring, Derry, NH, Burke (Stantec)
Date Started: 12/02/13 Date Finished: 12/04/13
VTSPG NAD83: N 696354.25 ft E 1766333.22 ft
Station: 17+47.61 Offset: 5.92 RT
Ground Elevation: 566.0 ft

	Casing	Sampler
Type:	WASH BORE	SS
I.D.:	4 in	1.38 in
Hammer Wt:	300 lb.	140 lb.
Hammer Fall:	24 in	30 in.
Hammer/Rod Type:	Safety/N	
Rig: N.H. BORING - Truck	C_e = 1	

Groundwater Observations		
Date	Depth (ft)	Notes
12/04/13	25.0	

Depth (ft)	Strata (1)	CLASSIFICATION OF MATERIALS (Description)	Run (Dip deg.)	Core Rec. % (RQD %)	Drill Rate minutes/ft	Blows/6" (N Value)	Moisture Content %	Gravel %	Sand %	Fines %
		Asphalt, 0.0 ft - 0.5 ft								
		Gravel base course, 0.5 ft - 2.0 ft								
		12 inches of Concrete, 2.0 ft - 3.0 ft								
		Visual Classification, Sa, brn, Moist, Rec. = 1.0 ft				3-3-2-4 (5)				
5		A-3, Sa, brn, Moist, Rec. = 1.0 ft				4-5-7-8 (12)	5.2	17.0	77.0	6.0
BOTTOM OF PILE CAP APPROX. EL. 555.2										
10		Visual Classification, GrSa, brn, Moist, Rec. = 0.3 ft				5-5-4-4 (9)				
15		Visual Classification, GrSa, brn, Moist, Rec. = 0.7 ft				7-6-5-5 (11)				
20		A-1-b, GrSa, brn, Moist, Rec. = 0.3 ft				2-3-3-4 (6)	17.2	21.0	69.0	10.0
25		A-2-4, SiSa, brn, Wet, Rec. = 1.5 ft				1-1-1-1 (2)	34.2		75.0	25.0
30		Visual Classification, Sa, brn, Wet, Rec. = 0.8 ft				10-11-12-12 (23)				
35		Visual Classification, Sa, brn, Wet, Rec. = 0.8 ft				6-7-10-10 (17)				

Notes:
1. Stratification lines represent approximate boundary between material types. Transition may be gradual.
2. N Values have not been corrected for hammer energy. C_e is the hammer energy correction factor.
3. Water level readings have been made at times and under conditions stated. Fluctuations of groundwater may occur due to other factors than those present at the time measurements were made.

2010 COPY VTRANS_BRIDGE #6_ST JOHNSBURY_VT.GPJ VERMONT AOT.GDT 3/5/14

STATE OF VERMONT
AGENCY OF TRANSPORTATION
MATERIALS & RESEARCH SECTION
SUBSURFACE INFORMATION

BORING LOG

St. Johnsbury
BRO 1447(30)
TH 371, Bridge #46 Over Sleepers River

Boring No.: **B-1**
Page No.: 2 of 3
Pin No.: 12J164
Checked By: TAD

Boring Crew: NH Boring, Derry, NH, Burke (Stantec)
Date Started: 12/02/13 Date Finished: 12/04/13
VTSPG NAD83: N 696354.25 ft E 1766333.22 ft
Station: 17+47.61 Offset: 5.92 RT
Ground Elevation: 566.0 ft

	Casing	Sampler
Type:	WASH BORE	SS
I.D.:	4 in	1.38 in
Hammer Wt:	300 lb.	140 lb.
Hammer Fall:	24 in	30 in.
Hammer/Rod Type:	Safety/N	
Rig: N.H. BORING - Truck	C_e = 1	

Groundwater Observations		
Date	Depth (ft)	Notes
12/04/13	25.0	

Depth (ft)	Strata (1)	CLASSIFICATION OF MATERIALS (Description)	Run (Dip deg.)	Core Rec. % (RQD %)	Drill Rate minutes/ft	Blows/6" (N Value)	Moisture Content %	Gravel %	Sand %	Fines %
		A-1-b, Sa, brn, Wet, Rec. = 1.2 ft				10-17-18-12 (35)	16.6	20.0	74.0	6.0
45		Visual Classification, SiSa, brn, Wet, Rec. = 0.7 ft				16-25-80-99 (105)				
50		A-2-4, SiSa, Lt/brn, Wet, Rec. = 1.0 ft				26-25-29-30 (54)	21.8		76.0	24.0
55		Visual Classification, SiSa, gry, Wet, Rec. = 1.0 ft				24-24-33-36 (62)				
60		Visual Classification, SiSa, gry, Wet, Rec. = 1.3 ft				17-20-24-24 (44)				
65		A-2-4, SiSa, gry, Wet, Rec. = 0.8 ft				17-27-29-29 (56)	23.0		74.0	26.0
70		Visual Classification, Sa, gry, Wet, Rec. = 1.2 ft				15-17-18-19 (35)				
75		A-3, Sa, gry, Wet, Rec. = 1.5 ft				24-24-25-28 (49)	19.2		94.0	6.0

Notes:
1. Stratification lines represent approximate boundary between material types. Transition may be gradual.
2. N Values have not been corrected for hammer energy. C_e is the hammer energy correction factor.
3. Water level readings have been made at times and under conditions stated. Fluctuations of groundwater may occur due to other factors than those present at the time measurements were made.

2010 COPY VTRANS_BRIDGE #6_ST JOHNSBURY_VT.GPJ VERMONT AOT.GDT 3/5/14

Stantec

PROJECT NAME: ST JOHNSBURY
PROJECT NUMBER: BRO 1447(30)

FILE NAME: z12j164bor_log.dgn
PROJECT LEADER: M. CHENETTE
DESIGNED BY: T. DYKSTRA
BORING LOG 1

PLOT DATE: 9/30/2016
DRAWN BY: L. BUXTON
CHECKED BY: J. HUNGERFORD
SHEET 22 OF 76

STATE OF VERMONT
AGENCY OF TRANSPORTATION
MATERIALS & RESEARCH SECTION
SUBSURFACE INFORMATION

BORING LOG

St. Johnsbury
BRO 1447(30)
TH 371, Bridge #46 Over Sleepers River

Boring No.: **B-1**
Page No.: 3 of 3
Pin No.: 12J164
Checked By: TAD

Boring Crew: NH Boring, Derry, NH, Burke (Stantec)
Date Started: 12/02/13 Date Finished: 12/04/13
VTSPG NAD83: N 696354.25 ft E 1766333.22 ft
Station: 17+47.61 Offset: 5.92 RT
Ground Elevation: 566.0 ft

	Casing	Sampler
Type:	WASH BORE	SS
I.D.:	4 in	1.38 in
Hammer Wt:	300 lb.	140 lb.
Hammer Fall:	24 in	30 in.
Hammer/Rod Type:	Safety/N	
Rig: N.H. BORING - Truck	C_e = 1	

Groundwater Observations

Date	Depth (ft)	Notes
12/04/13	25.0	

Depth (ft)	Strata (1)	CLASSIFICATION OF MATERIALS (Description)	Run (Dip deg.)	Core Rec.: % (RQD %)	Drill Rate minutes/ft	Blows/6" (N Value)	Moisture Content %	Gravel %	Sand %	Fines %
85		Visual Classification, Sa, gry, Wet, Rec. = 1.2 ft				26-28-21-21 (49)				
90										
95		A-3, Sa, gry, Wet, Rec. = 1.3 ft				25-45-47-59 (92)	18.8		96.0	4.0
100										
105		Visual Classification, Sa, gry, Wet, Rec. = 1.2 ft				17-27-100/5" (R)				
BOTTOM OF PILE TIP APPROX. EL. 459.5		106.5 ft - 111.5 ft, Gry, Phyllite, Hard, Fresh, Good rock, NXDC, Joints are moderatley dipping, moderately spaced, smooth to rough, and tight. RMR = 61	1 (35-55)	98 (98)	4 5 6 12 21	Top of Bedrock @ 106.5 ft				
110		111.5 ft - 116.5 ft, Gry, Phyllite, Hard, Fresh, Good rock, NXDC, Joints are moderatley dipping, moderately spaced, smooth to rough, and tight. RMR = 64	2 (35-55)	97 (92)	12 10 11 15 11					
115		Hole stopped @ 116.5 ft								

Notes:
1. Stratification lines represent approximate boundary between material types. Transition may be gradual.
2. N Values have not been corrected for hammer energy. C_e is the hammer energy correction factor.
3. Water level readings have been made at times and under conditions stated. Fluctuations of groundwater may occur due to other factors than those present at the time measurements were made.

2010 COPY VTRANS_BRIDGE 46_ST JOHNSBURY_VT.GPJ VERMONT_DOT.GDT 3/5/14

Stantec

PROJECT NAME: ST JOHNSBURY	
PROJECT NUMBER: BRO 1447(30)	
FILE NAME: z12j164bor_log.dgn	PLOT DATE: 9/30/2016
PROJECT LEADER: M. CHENETTE	DRAWN BY: L. BUXTON
DESIGNED BY: T. DYKSTRA	CHECKED BY: J. HUNGERFORD
BORING LOG 2	SHEET 23 OF 76

STATE OF VERMONT
AGENCY OF TRANSPORTATION
MATERIALS & RESEARCH SECTION
SUBSURFACE INFORMATION

BORING LOG

St. Johnsbury
BRO 1447(30)
TH 371, Bridge #46 Over Sleepers River

Boring No.: **B-2**
Page No.: 1 of 3
Pin No.: 12J164
Checked By: TAD

Boring Crew: NH Boring, Derry, NH, Burke (Stantec)
Date Started: 12/04/13 Date Finished: 2/06/13
VTSPG NAD83: N 696223.63 ft E 1766260.41 ft
Station: 15+98.34 Offset: 7.35 RT
Ground Elevation: 557.0 ft

	Casing	Sampler
Type:	WASH BORE	SS
I.D.:	4 in	1.38 in
Hammer Wt:	300 lb.	140 lb.
Hammer Fall:	24 in	30 in.
Hammer/Rod Type:	Safety/N	
Rig: N.H. BORING - Truck	C_e = 1	

Groundwater Observations

Date	Depth (ft)	Notes
12/06/13	15.0	

Depth (ft)	Strata (1)	CLASSIFICATION OF MATERIALS (Description)	Run (Dip deg.)	Core Rec. % (RQD %)	Drill Rate minutes/ft	Blows/6" (N Value)	Moisture Content %	Gravel %	Sand %	Fines %
		Asphalt, 0.0 ft - 0.25 ft								
		Sand, 0.25 ft - 0.42 ft								
		Concrete with rebar., 0.42 ft - 1.92 ft								
		Visual Classification, GrSa, brn, Moist, Rec. = 0.7 ft				2-3-5-3 (8)				
5		A-1-b, GrSa, brn, Moist, Rec. = 0.8 ft				3-4-5-4 (9)	8.6	33.0	60.0	7.0
		Visual Classification, GrSa, blk-brn, Wet, Rec. = 0.3 ft				4-3-8-5 (11)				
BOTTOM OF PILE CAP APPROX. EL. 548.7		Visual Classification, Wood, Rec. = 0.3 ft				7-24-10-7 (34)				
10		Visual Classification, GrSa, brn, Wet, Rec. = 0.7 ft				6-100/5" (R)				
		A-2-4, Sa, gry, Moist, Rec. = 1.0 ft				7-5-3-2 (8)	27.3		83.0	17.0
15		Visual Classification, SiSa, gry, Wet, Rec. = 1.5 ft				1-5-5-4 (10)				
		Visual Classification, SiSa, gry, Wet, Rec. = 1.3 ft				4-5-7-8 (12)				
20		Visual Classification, Sa, brn-gry, Moist, Rec. = 0.3 ft				5-7-12-10 (19)				
		Visual Classification, GrSa, brn-gry, Moist, Rec. = 0.8 ft				12-10-33-41 (43)				
		A-1-b, SaGr, gry, Wet, Rec. = 1.0 ft				35-22-25-29 (47)	11.6	47.0	44.0	9.0
25		Visual Classification, GrSa, gry, Wet, Rec. = 1.2 ft, organic material in sample				41-38-31-39 (69)				
30		Visual Classification, Sa, brn-gry, Wet, Rec. = 1.2 ft				66-44-21-17 (65)				
35		A-1-b, GrSa, brn, Wet, Rec. = 0.8 ft				38-21-26-29 (47)	15.9	23.0	69.0	8.0

Notes:
1. Stratification lines represent approximate boundary between material types. Transition may be gradual.
2. N Values have not been corrected for hammer energy. C_e is the hammer energy correction factor.
3. Water level readings have been made at times and under conditions stated. Fluctuations of groundwater may occur due to other factors than those present at the time measurements were made.

2010 COPY VTRANS_BRIDGE 46_ST JOHNSBURY_VT.GPJ VERMONT AOT.GDT 3/5/14

STATE OF VERMONT
AGENCY OF TRANSPORTATION
MATERIALS & RESEARCH SECTION
SUBSURFACE INFORMATION

BORING LOG

St. Johnsbury
BRO 1447(30)
TH 371, Bridge #46 Over Sleepers River

Boring No.: **B-2**
Page No.: 2 of 3
Pin No.: 12J164
Checked By: TAD

Boring Crew: NH Boring, Derry, NH, Burke (Stantec)
Date Started: 12/04/13 Date Finished: 2/06/13
VTSPG NAD83: N 696223.63 ft E 1766260.41 ft
Station: 15+98.34 Offset: 7.35 RT
Ground Elevation: 557.0 ft

	Casing	Sampler
Type:	WASH BORE	SS
I.D.:	4 in	1.38 in
Hammer Wt:	300 lb.	140 lb.
Hammer Fall:	24 in	30 in.
Hammer/Rod Type:	Safety/N	
Rig: N.H. BORING - Truck	C_e = 1	

Groundwater Observations

Date	Depth (ft)	Notes
12/06/13	15.0	

Depth (ft)	Strata (1)	CLASSIFICATION OF MATERIALS (Description)	Run (Dip deg.)	Core Rec. % (RQD %)	Drill Rate minutes/ft	Blows/6" (N Value)	Moisture Content %	Gravel %	Sand %	Fines %
		Visual Classification, Sa, brn, Wet, Rec. = 1.0 ft				19-24-22-30 (66)				
45		A-4, SiSa, brn, Wet, Rec. = 1.5 ft				9-11-18-21 (29)	22.9		57.0	43.0
50		Visual Classification, Sa, brn, Wet, Rec. = 1.3 ft				15-24-18-30 (42)				
55		A-3, Sa, brn, Wet, Rec. = 1.2 ft				17-17-20-24 (37)	26.8		93.0	7.0
60		Visual Classification, SiSa, brn, Wet, Rec. = 1.3 ft				18-18-20-19 (38)				
65		Visual Classification, Sa, gry, Wet, Rec. = 1.2 ft				15-21-36-27 (57)				
70		A-3, Sa, gry, Wet, Rec. = 1.3 ft				26-44-51-40 (95)	25.3		94.0	6.0
75		Visual Classification, Sa, gry, Wet, Rec. = 1.5 ft				14-29-41-36 (70)				

Notes:
1. Stratification lines represent approximate boundary between material types. Transition may be gradual.
2. N Values have not been corrected for hammer energy. C_e is the hammer energy correction factor.
3. Water level readings have been made at times and under conditions stated. Fluctuations of groundwater may occur due to other factors than those present at the time measurements were made.

2010 COPY VTRANS_BRIDGE 46_ST JOHNSBURY_VT.GPJ VERMONT AOT.GDT 3/5/14

Stantec

PROJECT NAME: ST JOHNSBURY
PROJECT NUMBER: BRO 1447(30)

FILE NAME: z12j164bor_log.dgn
PROJECT LEADER: M. CHENETTE
DESIGNED BY: T. DYKSTRA
BORING LOG 3

PLOT DATE: 9/30/2016
DRAWN BY: L. BUXTON
CHECKED BY: J. HUNGERFORD
SHEET 24 OF 76

STATE OF VERMONT
AGENCY OF TRANSPORTATION
MATERIALS & RESEARCH SECTION
SUBSURFACE INFORMATION

BORING LOG

St. Johnsbury
BRO 1447(30)
TH 371, Bridge #46 Over Sleepers River

Boring No.: **B-2**
Page No.: 3 of 3
Pin No.: 12J164
Checked By: TAD

Boring Crew: NH Boring, Derry, NH, Burke (Stantec)
Date Started: 12/04/13 Date Finished: 2/06/13
VTSPG NAD83: N 696223.63 ft E 1766260.41 ft
Station: 15+98.34 Offset: 7.35 RT
Ground Elevation: 557.0 ft

	Casing	Sampler
Type:	WASH BORE	SS
I.D.:	4 in	1.38 in
Hammer Wt:	300 lb.	140 lb.
Hammer Fall:	24 in	30 in.
Hammer/Rod Type:	Safety/N	
Rig: N.H. BORING - Truck	C_e = 1	

Groundwater Observations

Date	Depth (ft)	Notes
12/06/13	15.0	

Depth (ft)	Strata (1)	CLASSIFICATION OF MATERIALS (Description)	Run (Dip deg.)	Core Rec.: % (RQD %)	Drill Rate minutes/ft	Blows/6" (N Value)	Moisture Content %	Gravel %	Sand %	Fines %
		Visual Classification, Sa, gry, Wet, Rec. = 1.2 ft				17-26-27-27 (53)				
85		A-3, Sa, gry, Wet, Rec. = 0.8 ft				18-24-25-24 (49)	20.2		91.0	9.0
90		Visual Classification, Sa, gry, Wet, Rec. = 1.2 ft				21-23-32-32 (55)				
95		93.5 ft - 98.5 ft, Gry, Phyllite, Hard, Fresh, Poor rock, NXDC, Joints are low angle to moderatley dipping, closely spaced, smooth to rough, and tight to open. RMR = 39	1 (5-55)	53 (28)	10 4 2 3 3	Top of Bedrock @ 93.5 ft				
BOTTOM OF PILE TIP APPROX. EL. 459.5										
100		99.0 ft - 104.0 ft, Gry, Phyllite, Hard, Fresh, Fair rock, NXDC, Joints are low angle, moderately close, smooth to rough, and tight. RMR = 58	2 (5-55)	93 (80)	6 5 6 7 8					
105		Hole stopped @ 104.0 ft								
110		Remarks: Cleaned out hole to 99 feet bgs with roller bit after core run no. 1.								
115										

Notes:
1. Stratification lines represent approximate boundary between material types. Transition may be gradual.
2. N Values have not been corrected for hammer energy. C is the hammer energy correction factor.
3. Water level readings have been made at times and under conditions stated. Fluctuations of groundwater may occur due to other factors than those present at the time measurements were made.

2010 COPY VTRANS_BRIDGE 46_ST JOHNSBURY_VT.GPJ VERMONT AOT.GDT 3/5/14

Stantec

PROJECT NAME: ST JOHNSBURY
PROJECT NUMBER: BRO 1447(30)

FILE NAME: z12j164bor_log.dgn
PROJECT LEADER: M. CHENETTE
DESIGNED BY: T. DYKSTRA
BORING LOG 4

PLOT DATE: 9/30/2016
DRAWN BY: L. BUXTON
CHECKED BY: J. HUNGERFORD
SHEET 25 OF 76

STATE OF VERMONT
AGENCY OF TRANSPORTATION
MATERIALS & RESEARCH SECTION
SUBSURFACE INFORMATION

BORING LOG

St. Johnsbury
BRO 1447(30)
TH 371, Bridge #46 Over Sleepers River

Boring No.: **B-3**
Page No.: 1 of 2
Pin No.: 12J164
Checked By: TAD

Boring Crew: NH Boring, Derry, NH, Burke (Stantec)
Date Started: 12/06/13 Date Finished: 12/06/13
VTSPG NAD83: N 696241.43 ft E 1766306.51 ft
Station: 16+36.69 Offset: 38.53 RT
Ground Elevation: 553.0 ft

	Casing	Sampler
Type:	WASH BORE	SS
I.D.:	4 in	1.38 in
Hammer Wt:	300 lb.	140 lb.
Hammer Fall:	24 in	30 in.
Hammer/Rod Type:	Safety/N	
Rig: N.H. BORING - Truck	C$_e$ = 1	

Groundwater Observations

Date	Depth (ft)	Notes
12/06/13	9.0	

Depth (ft)	Strata (1)	CLASSIFICATION OF MATERIALS (Description)	Blows/6" (N Value)	Moisture Content %	Gravel %	Sand %	Fines %
		Not Sampled, 12 inches of crushed stone for parking area, Dry					
		Visual Classification, Sa, tan, Moist, Rec. = 1.2 ft, PID = 0 ppm	12-13-13-15 (26)				
BOTTOM OF PILE CAP APPROX. EL. 548.7		Visual Classification, Sa, brn, Moist, Rec. = 0.8 ft, PID = 0.1 ppm (3-4 ft) and 5.2 ppm (3-4 ft)	52-39-27-21 (66)				
5		Visual Classification, Sa, red-brn, Moist, Rec. = 1.2 ft, PID = 6.2 ppm (4-5 ft) and 5.2 ppm (5-6 ft)	18-22-20-35 (42)				
		A-3, Sa, red-brn, Moist, Rec. = 0.8 ft, PID = 14.8 ppm (6-7 ft) and 15.2 ppm (7-8 ft)	18-16-12-7 (28)	9.9	2.0	89.0	9.0
10		Visual Classification, SiSa, brn, Wet, Rec. = 1.0 ft, PID = 15.9 ppm (8-9 ft) and 16.5 ppm (9-10 ft)	17-23-25-25 (48)				
15		Visual Classification, SiSa, Dk/gry, Wet, Rec. = 1.5 ft, Strong petroleum odor, PID = 65.2 ppm (14-15 ft) and 62.2 ppm (15-16 ft)	3-2-1-2 (3)				
20		Visual Classification, Sa, Dk/gry, Wet, Rec. = 1.3 ft, Petroleum odor, PID = 3.2 ppm (19-20 ft) and 0.8 ppm (20-21 ft), Organic Content = 6.4%	5-5-7-8 (12)	78.3			
25		Visual Classification, SaSi, brn-gry, Wet, Rec. = 1.5 ft	6-8-11-11 (19)				
30		A-2-4, Sa, Lt/brn, Wet, Rec. = 1.2 ft	11-13-17-11 (30)	24.7		82.0	18.0
35		Visual Classification, Sa, brn, Wet, Rec. = 1.7 ft	5-10-11-12 (21)				
		Visual Classification, SaSi, Lt/brn, Wet, Rec. = 1.2 ft	19-24-				

Notes:
1. Stratification lines represent approximate boundary between material types. Transition may be gradual.
2. N Values have not been corrected for hammer energy. C$_e$ is the hammer energy correction factor.
3. Water level readings have been made at times and under conditions stated. Fluctuations of groundwater may occur due to other factors than those present at the time measurements were made.

BOTTOM OF PILE TIP
APPROX. EL. 459.5

2010 COPY VTRANS_BRIDGE 46_ST JOHNSBURY_VT.GPJ VERMONT AOT.GDT 3/5/14

STATE OF VERMONT
AGENCY OF TRANSPORTATION
MATERIALS & RESEARCH SECTION
SUBSURFACE INFORMATION

BORING LOG

St. Johnsbury
BRO 1447(30)
TH 371, Bridge #46 Over Sleepers River

Boring No.: **B-3**
Page No.: 2 of 2
Pin No.: 12J164
Checked By: TAD

Boring Crew: NH Boring, Derry, NH, Burke (Stantec)
Date Started: 12/06/13 Date Finished: 12/06/13
VTSPG NAD83: N 696241.43 ft E 1766306.51 ft
Station: 16+36.69 Offset: 38.53 RT
Ground Elevation: 553.0 ft

	Casing	Sampler
Type:	WASH BORE	SS
I.D.:	4 in	1.38 in
Hammer Wt:	300 lb.	140 lb.
Hammer Fall:	24 in	30 in.
Hammer/Rod Type:	Safety/N	
Rig: N.H. BORING - Truck	C$_e$ = 1	

Groundwater Observations

Date	Depth (ft)	Notes
12/06/13	9.0	

Depth (ft)	Strata (1)	CLASSIFICATION OF MATERIALS (Description)	Blows/6" (N Value)	Moisture Content %	Gravel %	Sand %	Fines %
			34-15 (58)				
45		Visual Classification, Sa, brn, Wet, Rec. = 1.5 ft	18-26-22-29 (48)				
50		Visual Classification, Sa, brn, Wet, Rec. = 1.5 ft	14-18-29-32 (47)				
		Hole stopped @ 51.0 ft					
		Remarks: No refusal.					
55							
60							
65							
70							
75							

Notes:
1. Stratification lines represent approximate boundary between material types. Transition may be gradual.
2. N Values have not been corrected for hammer energy. C$_e$ is the hammer energy correction factor.
3. Water level readings have been made at times and under conditions stated. Fluctuations of groundwater may occur due to other factors than those present at the time measurements were made.

2010 COPY VTRANS_BRIDGE 46_ST JOHNSBURY_VT.GPJ VERMONT AOT.GDT 3/5/14

Stantec

PROJECT NAME: ST JOHNSBURY
PROJECT NUMBER: BRO 1447(30)

FILE NAME: z12j164bor_log.dgn
PROJECT LEADER: M. CHENETTE
DESIGNED BY: T. DYKSTRA
BORING LOG 5

PLOT DATE: 9/30/2016
DRAWN BY: L. BUXTON
CHECKED BY: J. HUNGERFORD
SHEET 26 OF 76

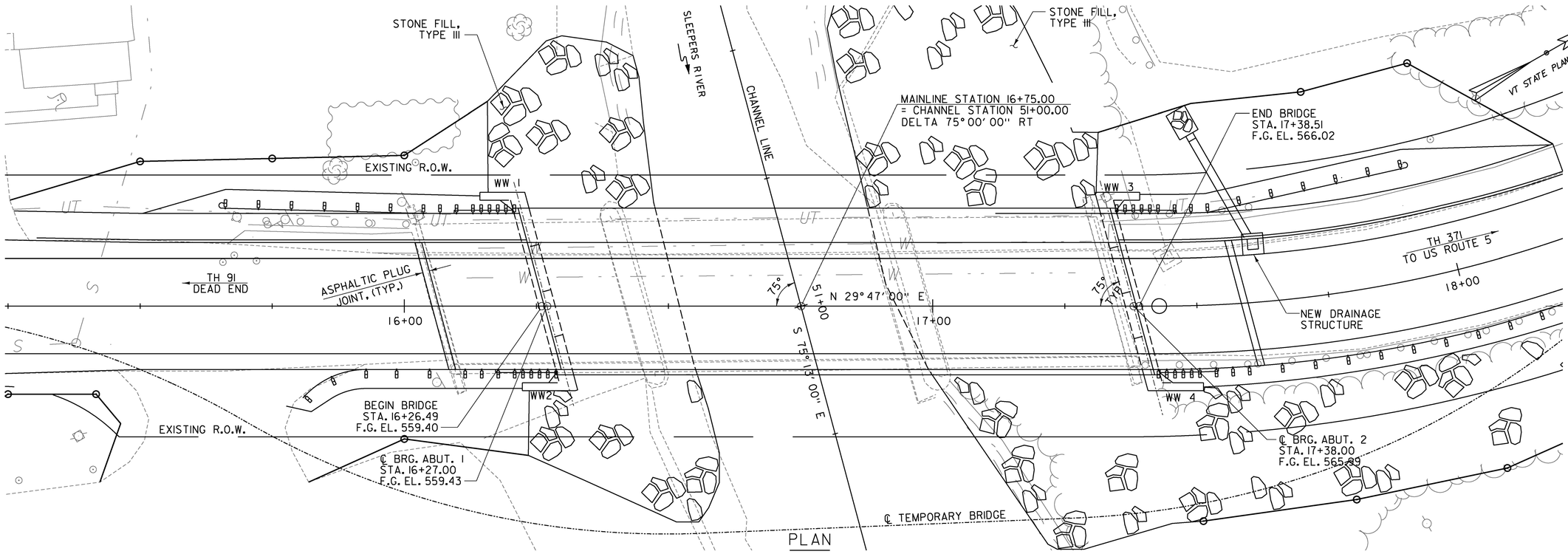

PLAN

SCALE: 1" = 10'-0"

0 10 20

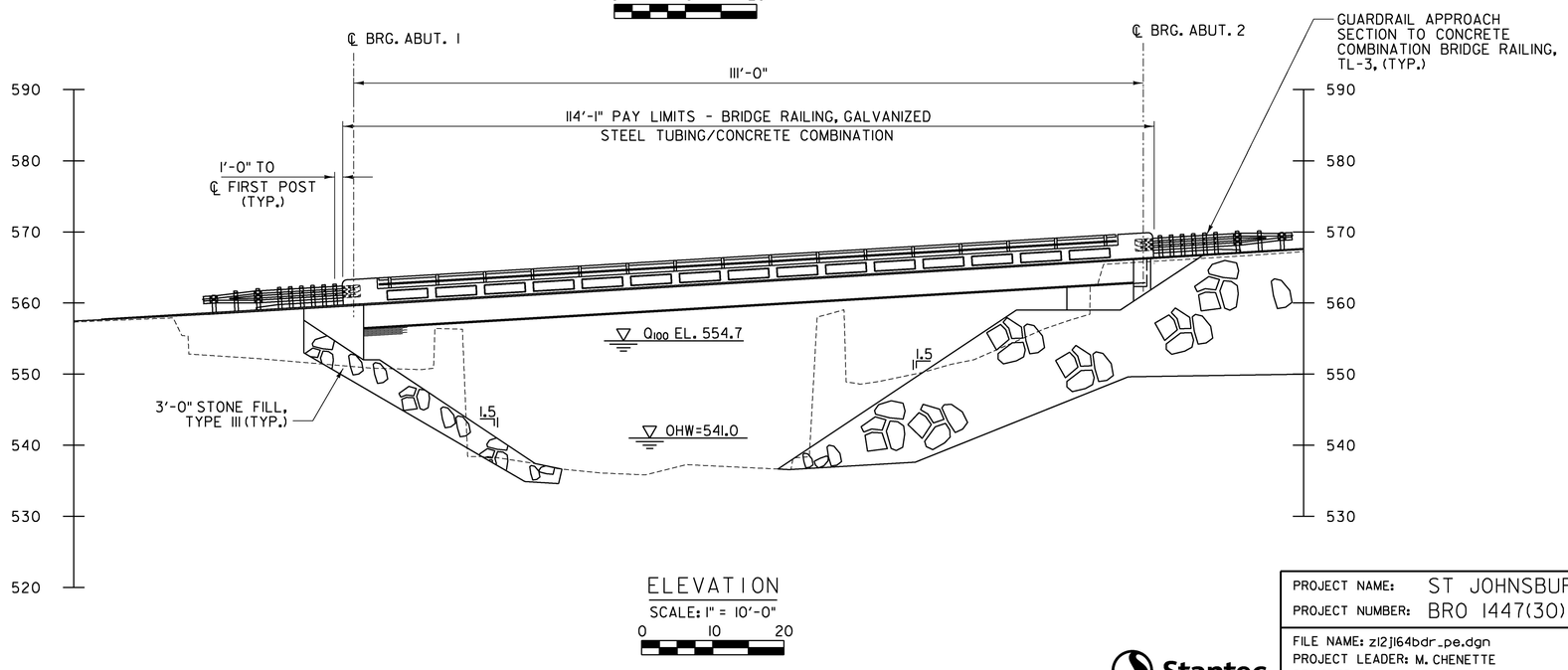

ELEVATION

SCALE: 1" = 10'-0"

0 10 20

Stantec

PROJECT NAME:	ST JOHNSBURY
PROJECT NUMBER:	BRO 1447(30)
FILE NAME: z12j164bdr_pe.dgn	PLOT DATE: 9/30/2016
PROJECT LEADER: M. CHENETTE	DRAWN BY: L. BUXTON
DESIGNED BY: J. HUNGERFORD	CHECKED BY: M. CHENETTE
PLAN AND ELEVATION	SHEET 27 OF 76

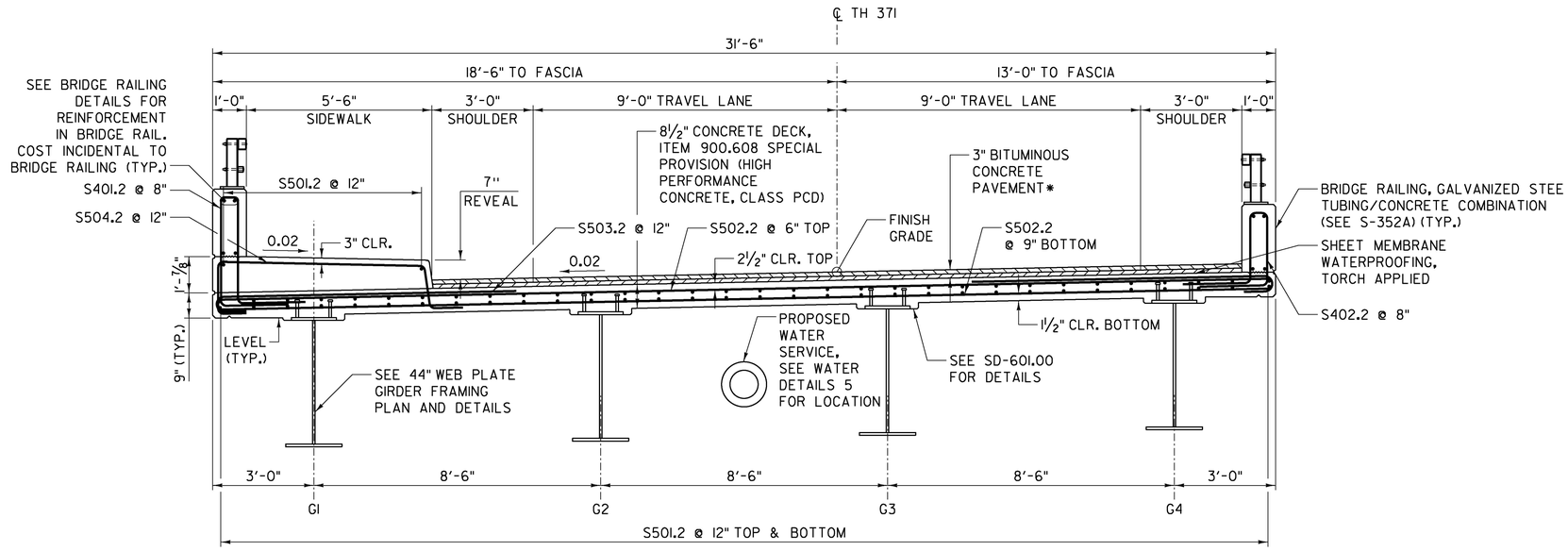

DECK TYPICAL
SCALE: ½" = 1'-0"

*1½" TYPE IVB OVER
1½" TYPE IVB

Stantec

PROJECT NAME: ST JOHNSBURY	
PROJECT NUMBER: BRO 1447(30)	
FILE NAME: z12j164fra_dets.dgn	PLOT DATE: 9/30/2016
PROJECT LEADER: M. CHENETTE	DRAWN BY: J. SOTER
DESIGNED BY: D. TAYLOR	CHECKED BY: T. KNIGHT
DECK REINFORCING SECTION	SHEET 28 OF 76

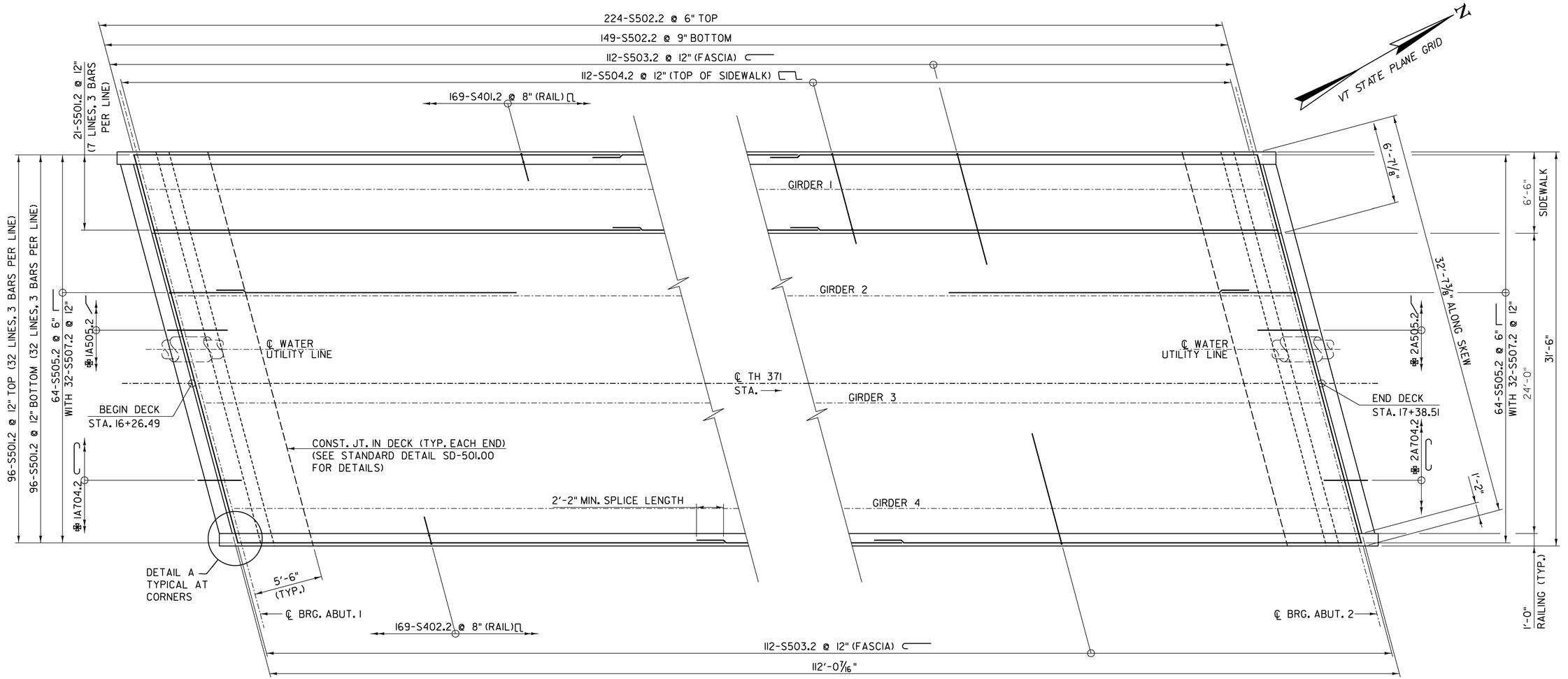

BRIDGE DECK REINFORCING PLAN

SCALE: 1/4" = 1'-0"

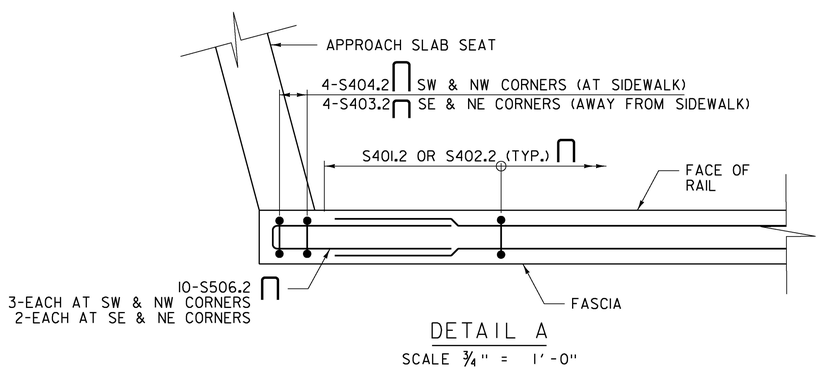

DETAIL A

SCALE 3/4" = 1'-0"

NOTES:

1. 2'-2" MINIMUM BAR LAP UNLESS OTHERWISE SPECIFIED ON PLANS.
2. # - INDICATES ABUTMENT BAR. REFER TO ABUTMENT DRAWINGS FOR DETAILS.

Stantec

PROJECT NAME: ST JOHNSBURY	
PROJECT NUMBER: BRO 1447(30)	
FILE NAME: z12j164deck.dgn	PLOT DATE: 9/30/2016
PROJECT LEADER: M. CHENETTE	DRAWN BY: J. SOTER
DESIGNED BY: D. TAYLOR	CHECKED BY: TEK/DDT
DECK REINFORCING PLAN	SHEET 29 OF 76

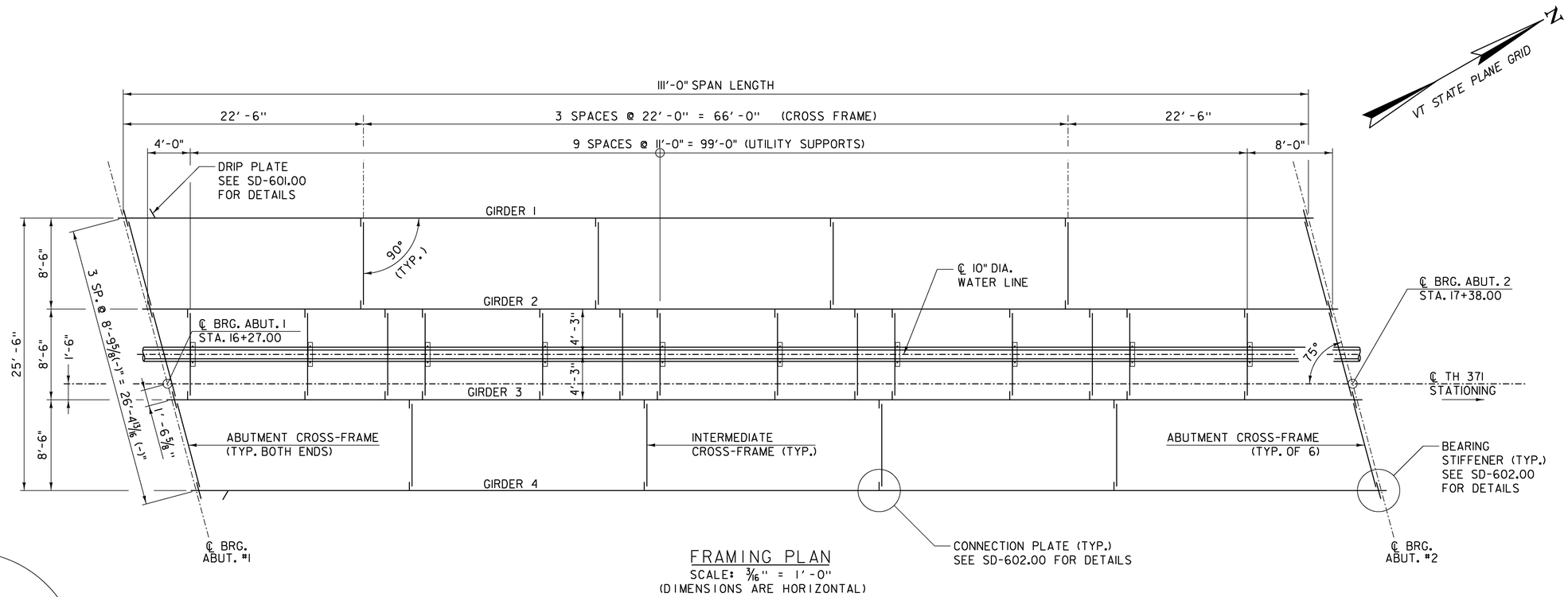

FRAMING PLAN

SCALE: 3/16" = 1'-0"
(DIMENSIONS ARE HORIZONTAL)

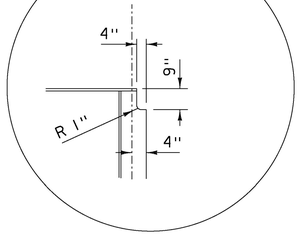

DETAIL B

NOT TO SCALE

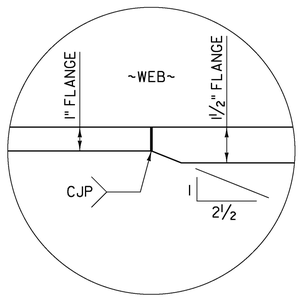

DETAIL A

NOT TO SCALE

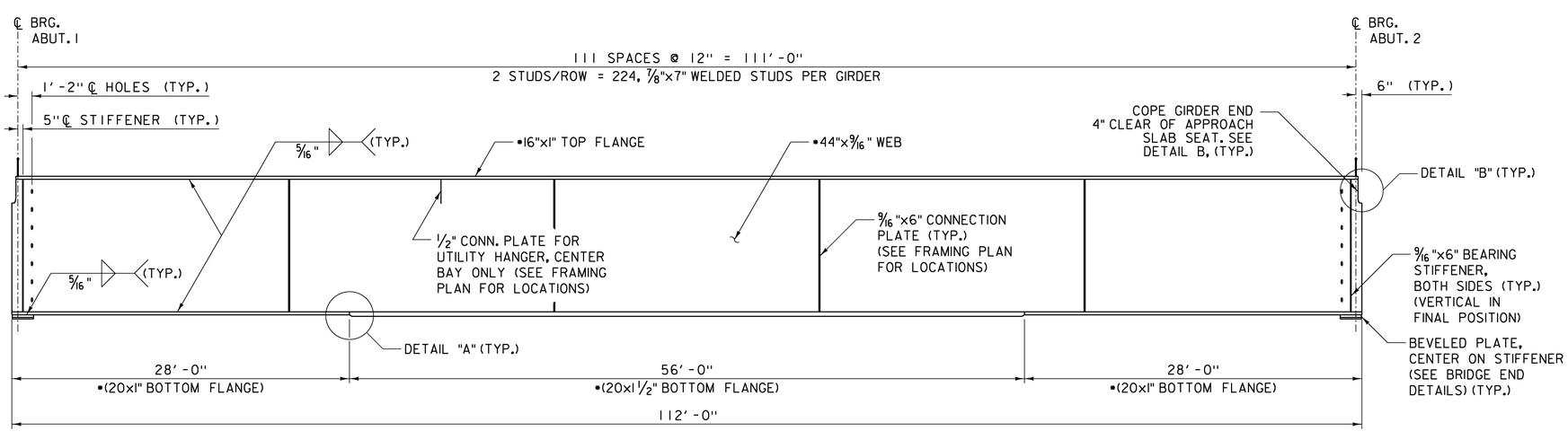

GIRDER ELEVATION

NOT TO SCALE

• DENOTES CHARPY V-NOTCH TEST REQUIRED

Stantec

PROJECT NAME:	ST JOHNSBURY
PROJECT NUMBER:	BRO 1447(30)
FILE NAME: z12j164fra.dgn	PLOT DATE: 9/30/2016
PROJECT LEADER: M. CHENETTE	DRAWN BY: J. SOTER
DESIGNED BY: D. TAYLOR	CHECKED BY: TEK/DDT
FRAMING PLAN	SHEET 30 OF 76

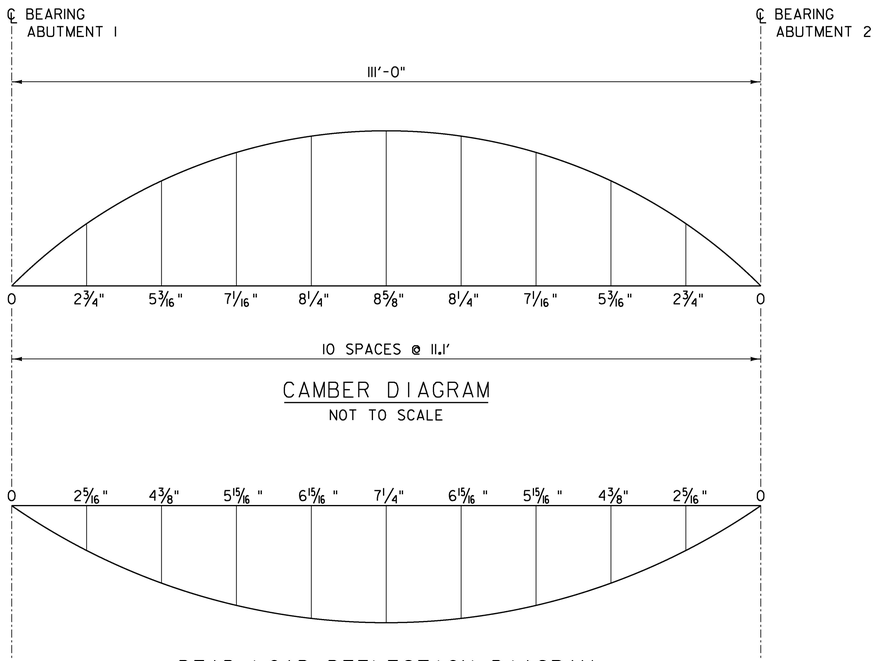

CAMBER DIAGRAM

NOT TO SCALE

DEAD LOAD DEFLECTION DIAGRAM

NOT TO SCALE

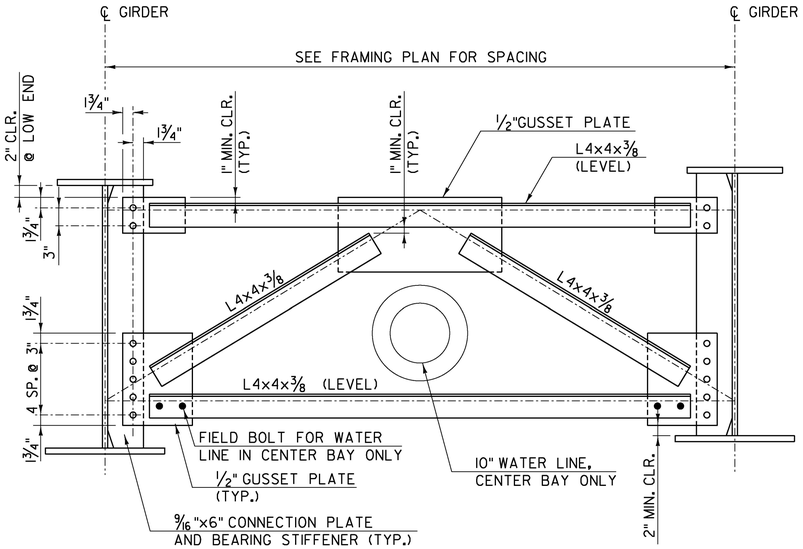

INTERMEDIATE CROSS FRAME SHOWN,
ABUTMENT CROSS FRAME SIMILAR

INTERMEDIATE AND ABUTMENT CROSS-FRAME DETAIL

SCALE: 1" = 1'-0"

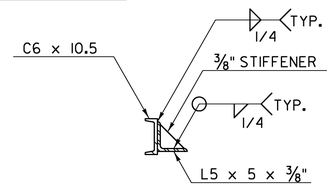

DETAIL B

SCALE: 1" = 1'-0"

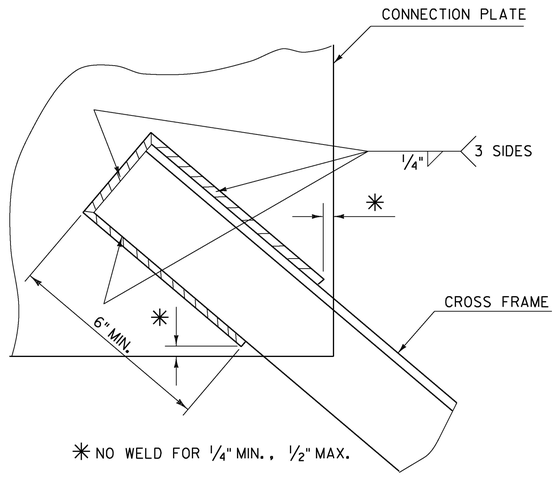

WELD LOCATION DETAIL AT CROSS FRAMES AND LATERAL BRACING

NOT TO SCALE

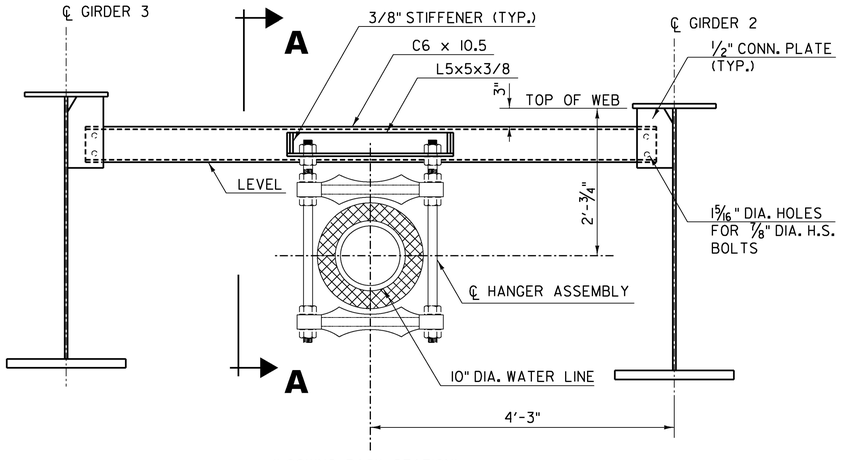

(LOOKING BACK STATION)

UTILITY SUPPORT DETAIL

SCALE: 1" = 1'-0"

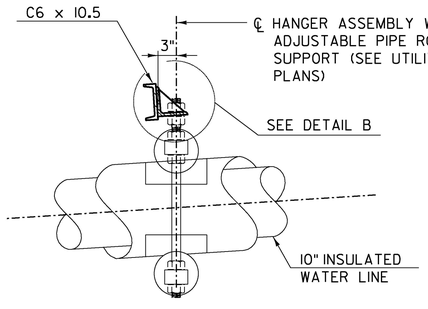

SECTION A-A

SCALE: 1" = 1'-0"

Stantec

PROJECT NAME:	ST JOHNSBURY
PROJECT NUMBER:	BRO 1447(30)
FILE NAME: z12j164fra_dets.dgn	PLOT DATE: 9/30/2016
PROJECT LEADER: M. CHENETTE	DRAWN BY: J. SOTER
DESIGNED BY: D. TAYLOR	CHECKED BY: TEK/DDT
STEEL DETAILS	SHEET 31 OF 76

BEARING NOTES:

1. BEARINGS SHALL CONFORM TO THE APPLICABLE SUBSECTIONS OF STANDARD SPECIFICATIONS SECTIONS 531 AND 731.

2. ALL REINFORCEMENT BETWEEN LAYERS OF ELASTOMER SHALL BE STEEL MEETING THE REQUIREMENTS OF SUBSECTION 714.02. ALL INTERNAL STEEL PLATES SHALL BE SAND BLASTED AND FREE OF COATING, RUST AND MILL SCALE. THE PLATES SHALL BE FREE OF SHARP EDGES AND BURRS.

3. THE BEARINGS ARE DESIGNED SO THAT THE SUPERSTRUCTURE MAY BE ERECTED WHEN THE BEAM TEMPERATURE IS WITHIN THE RANGE OF 20 DEGREES F AND 70 DEGREES F WITHOUT ADJUSTING THE BEARINGS FOR TEMPERATURE. IF THE BEAM TEMPERATURE IS OUTSIDE THIS RANGE, THE BEARINGS SHALL BE RESET AS DIRECTED BY THE RESIDENT.

4. STEEL REINFORCED ELASTOMERIC BEARINGS WERE DESIGNED PER METHOD = A.

5. THE ELASTOMER WAS DESIGNED WITH A SHEAR MODULUS OF 152 PSI +/- 15%.

6. ABUTMENT 1 AND 2 BEARINGS
   - A. DESIGN DEAD LOAD REACTION = 70.0 KIPS/BEARING
   - B. DESIGN LIVE LOAD REACTION = N/A
   - C. ROTATION CAPACITY = 0.015 RADIANS
   - D. LONGITUDINAL DESIGN TRANSLATION = 0.25"

7. THE CONCRETE SURFACE UNDER THE BEARING SHALL BE LEVEL.

8. THE ELASTOMER SHALL MEET THE REQUIREMENTS OF SUBSECTION 731.03.

9. ALTERNATE CONFIGURATIONS FOR BEARINGS MAY BE SUBMITTED FOR APPROVAL. ANY ALTERNATE SUBMITTED SHALL BE DESIGNED AND CERTIFIED TO MEET THE DESIGN LOADS AND CRITERIA SHOWN ON THE PLANS.

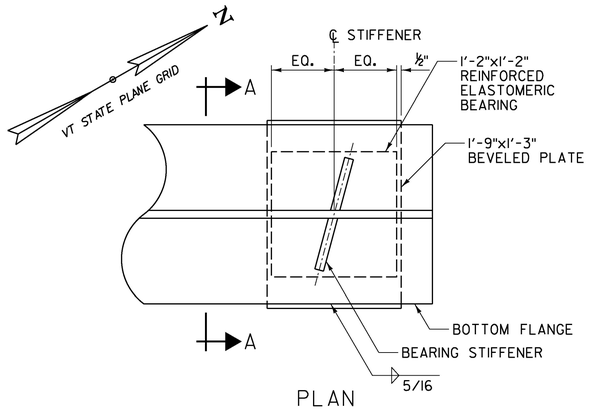

PLAN

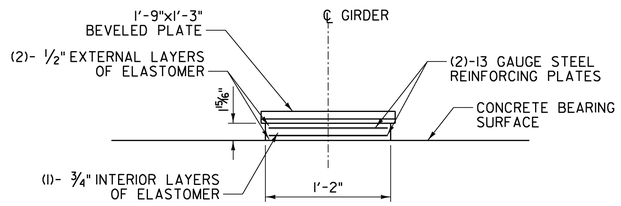

SECTION A-A
(GIRDER NOT SHOWN FOR CLARITY)

ELASTOMERIC BEARING ASSEMBLY
SCALE 1½" = 1'-0"

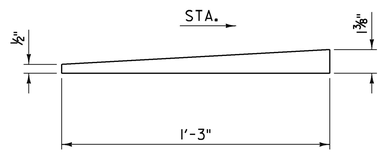

BEVELED PLATE DETAIL
NOT TO SCALE

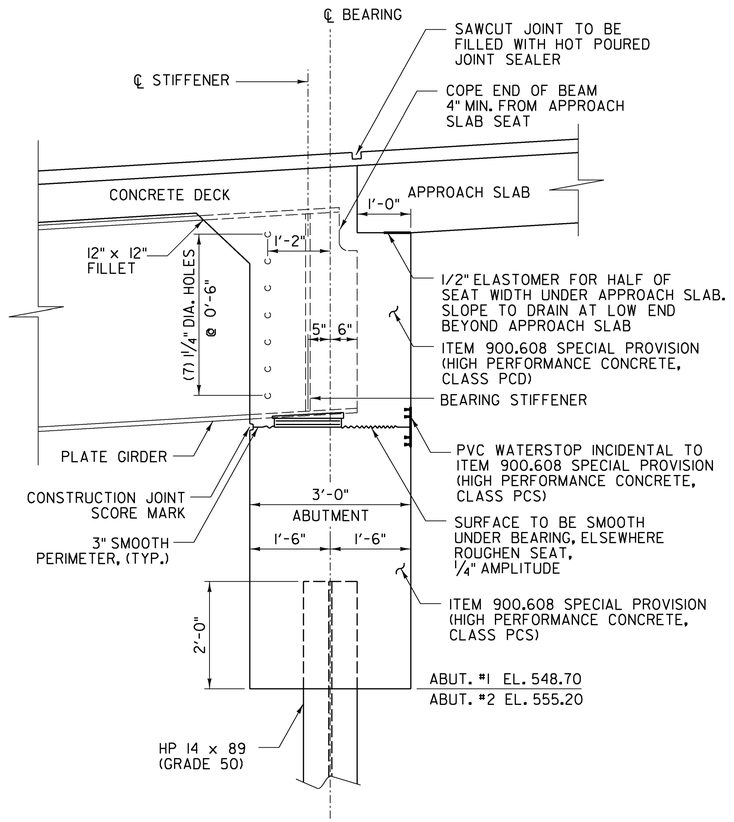

BRIDGE END DETAIL
SCALE ¾" = 1'-0"

PROJECT NAME:	ST JOHNSBURY
PROJECT NUMBER:	BRO 1447(30)
FILE NAME: z12j164end det.dgn	PLOT DATE: 9/30/2016
PROJECT LEADER: M. CHENETTE	DRAWN BY: L. BUXTON
DESIGNED BY: N. TIRK	CHECKED BY: T. KNIGHT/N. TIRK
BRIDGE END DETAILS	SHEET 32 OF 76

Stantec

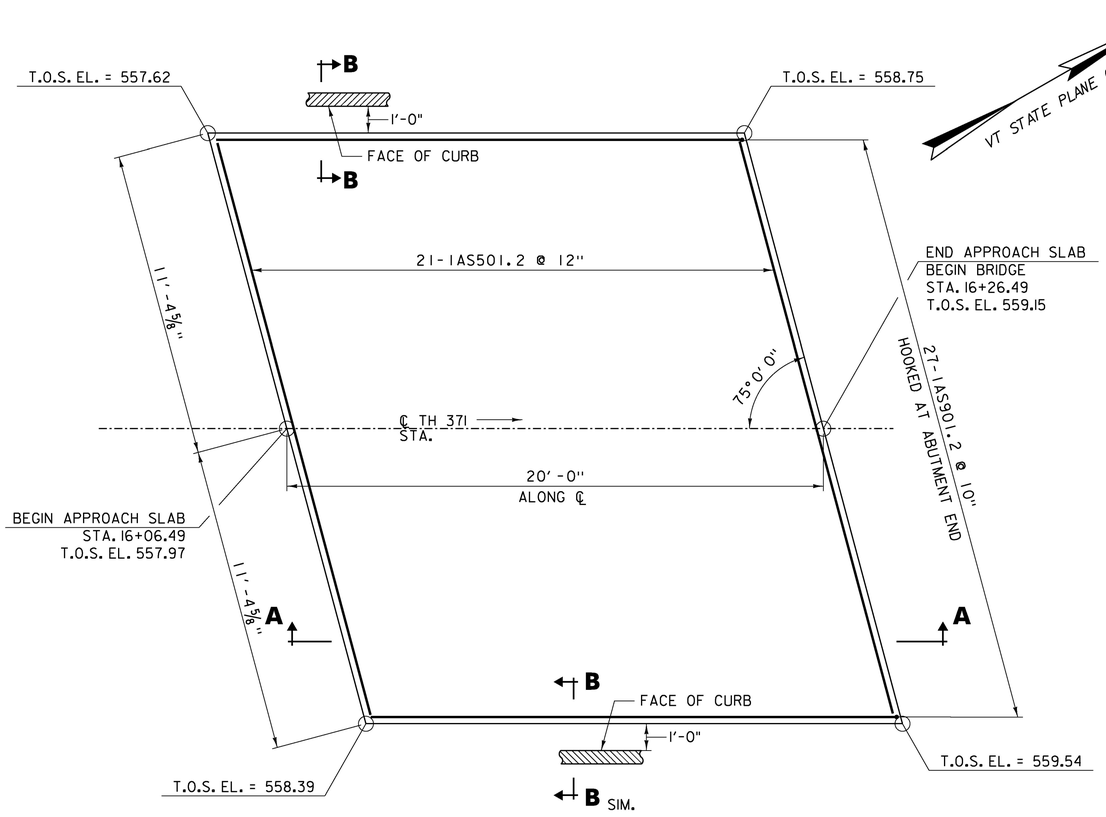

APPROACH SLAB #1 PLAN

SCALE ⅜" = 1'-0"

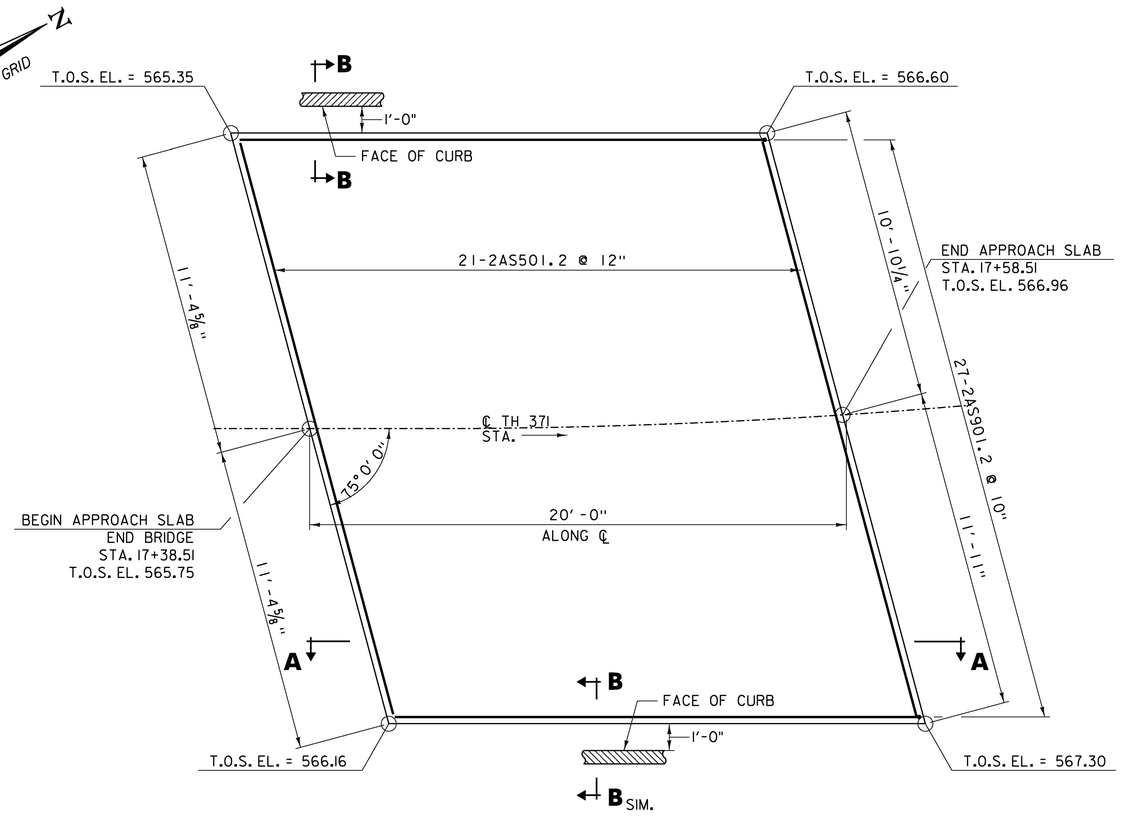

APPROACH SLAB #2 PLAN

SCALE ⅜" = 1'-0"

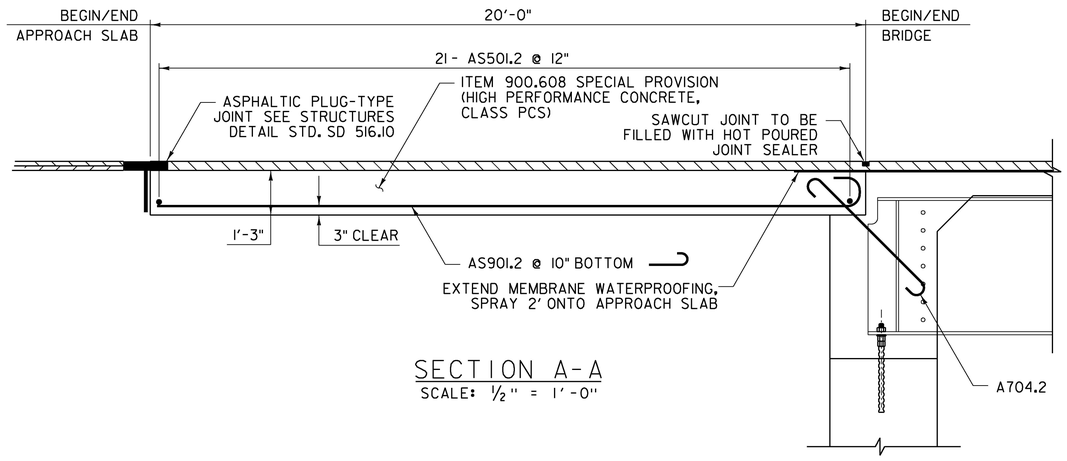

SECTION A-A

SCALE: ½" = 1'-0"

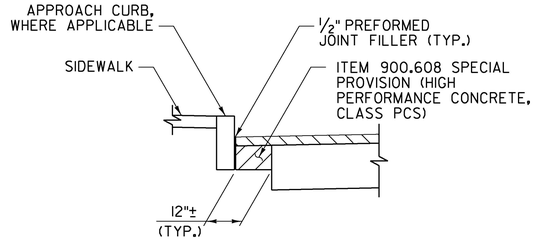

SECTION B-B

SCALE: ½" = 1'-0"

NOTES:

NF = NEAR FACE
FF = FAR FACE
EF = EACH FACE
▲ = CUT TO FIT IN FIELD

ALL LAPS ARE 2'-0" UNLESS OTHERWISE SPECIFIED ON THE PLANS.

Stantec

PROJECT NAME: ST JOHNSBURY	
PROJECT NUMBER: BRO 1447(30)	
FILE NAME: z12j164app slabs.dgn	PLOT DATE: 9/30/2016
PROJECT LEADER: M. CHENETTE	DRAWN BY: L. BUXTON
DESIGNED BY: N. TIRK	CHECKED BY: N. TIRK
APPROACH SLAB DETAILS	SHEET 33 OF 76

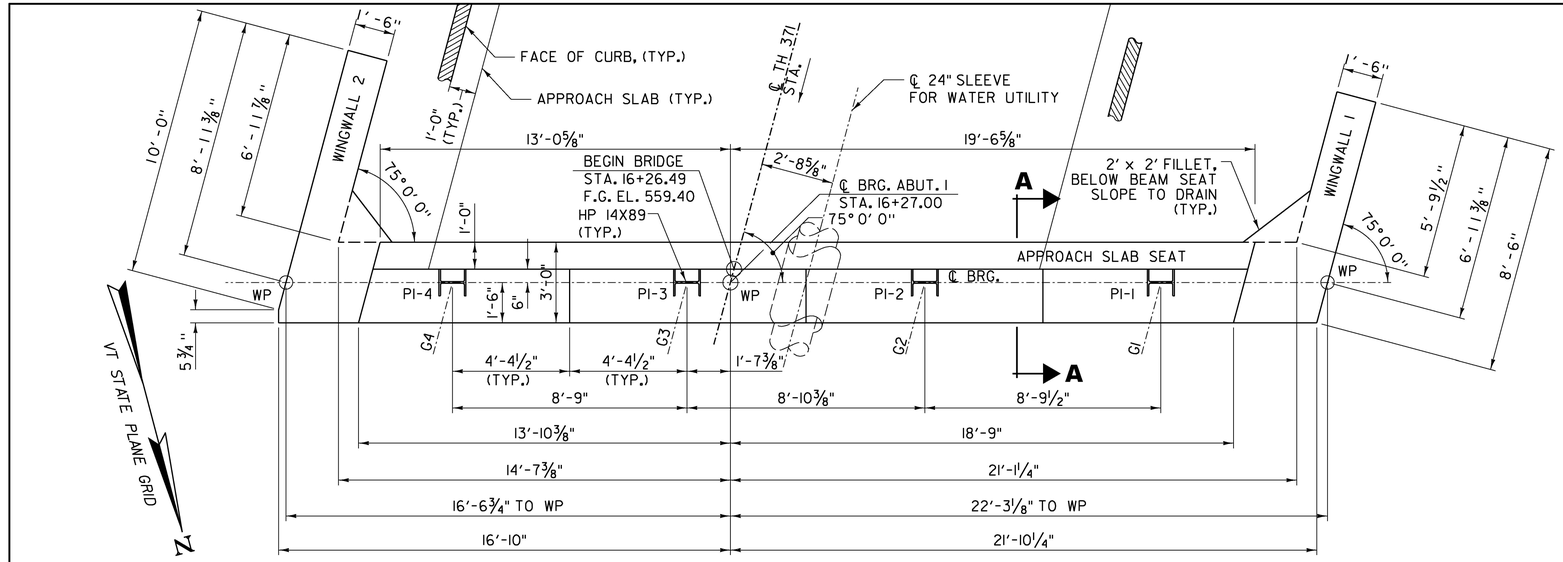

ABUTMENT 1 PLAN

SCALE 3/8" = 1'-0"

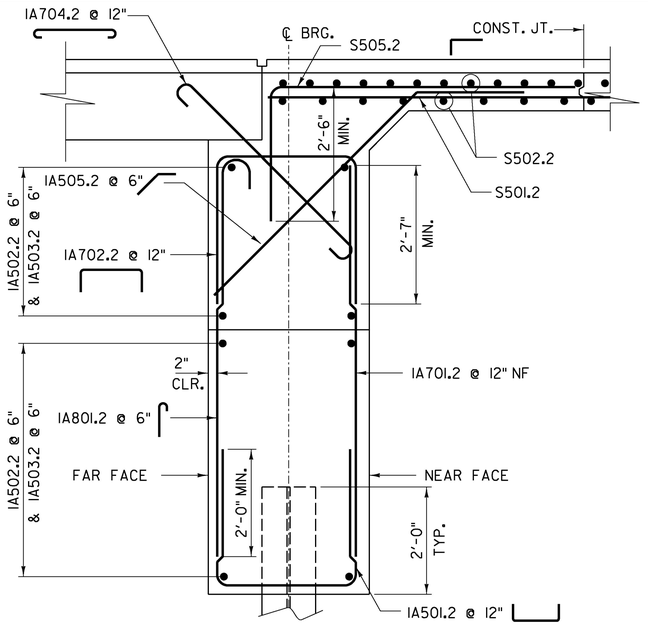

SECTION A-A

SCALE 3/4" = 1'-0"

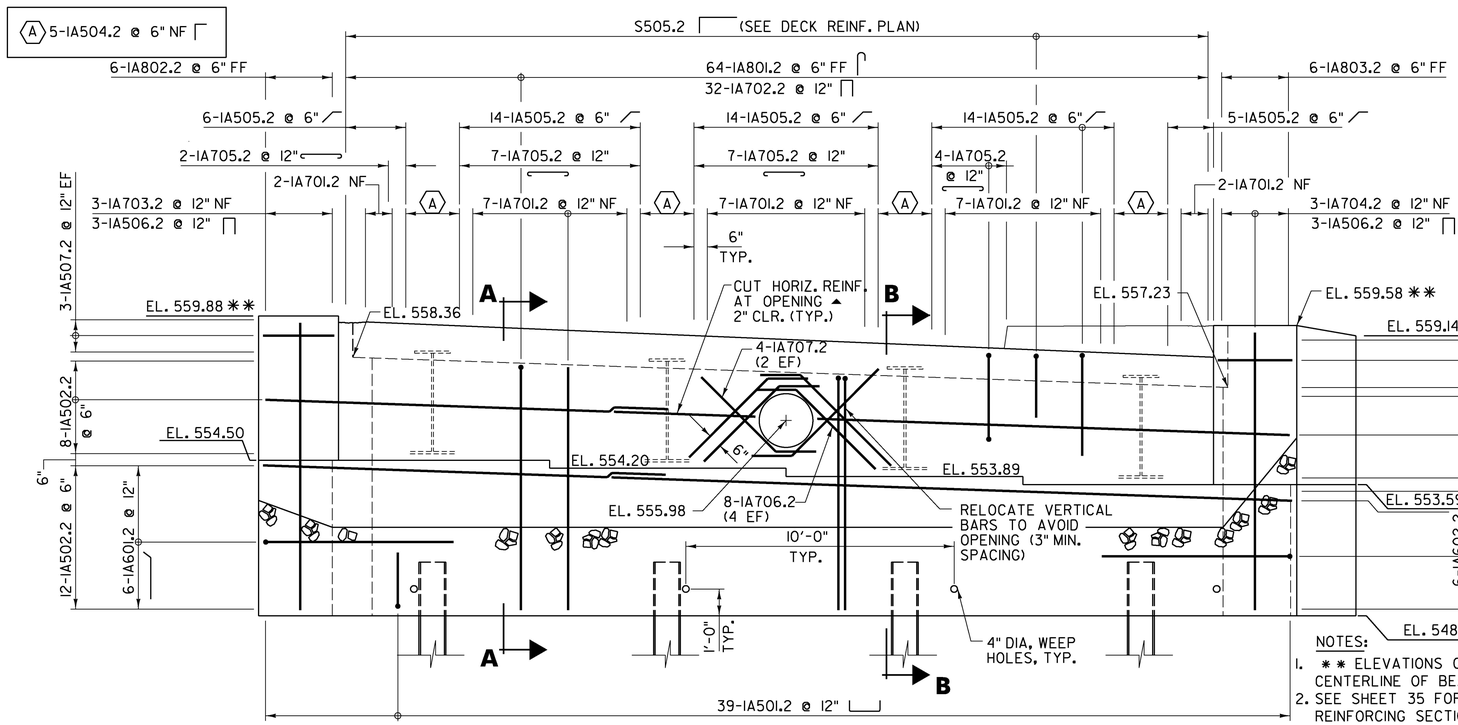

ABUTMENT 1 ELEVATION

SCALE 3/8" = 1'-0"

LEGEND:

NF = NEAR FACE
FF = FAR FACE
EF = EACH FACE
▲ = CUT TO FIT IN FIELD

NOTES:

1. ** ELEVATIONS GIVEN AT CENTERLINE OF BEARING.
2. SEE SHEET 35 FOR CORNER REINFORCING SECTIONS FOR BARS NOT SHOWN.
3. SEE SHEET 29 FOR DECK REINFORCING BARS NOT SHOWN.
4. SEE SHEET 36 FOR WINGWALL REINFORCING BARS NOT SHOWN.
5. 3" CLEAR UNLESS OTHERWISE SPECIFIED ON THE PLANS.

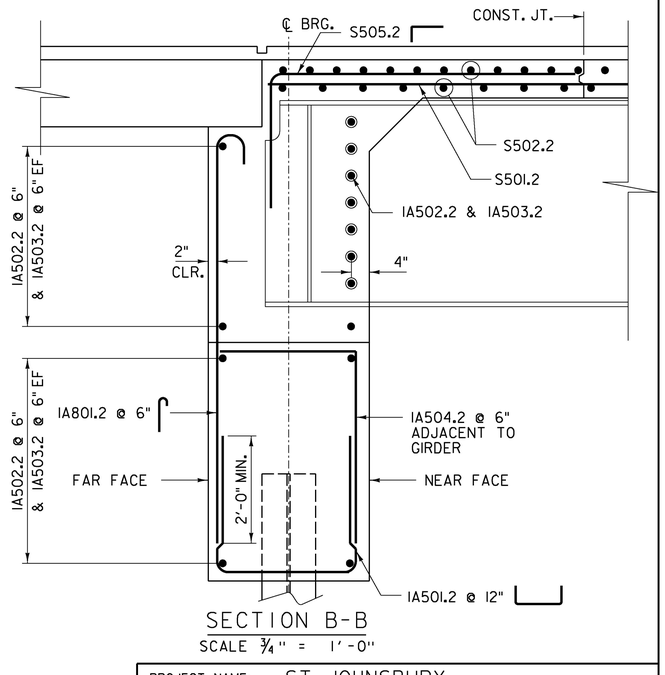

SECTION B-B

SCALE 3/4" = 1'-0"

Stantec

PROJECT NAME:	ST JOHNSBURY
PROJECT NUMBER:	BRO 1447(30)
FILE NAME: z12j164abuts.dgn	PLOT DATE: 9/30/2016
PROJECT LEADER: M. CHENETTE	DRAWN BY: L. BUXTON
DESIGNED BY: N. TIRK	CHECKED BY: T. KNIGHT/N. TIRK
ABUTMENT 1 PLAN & ELEVATION	SHEET 34 OF 76

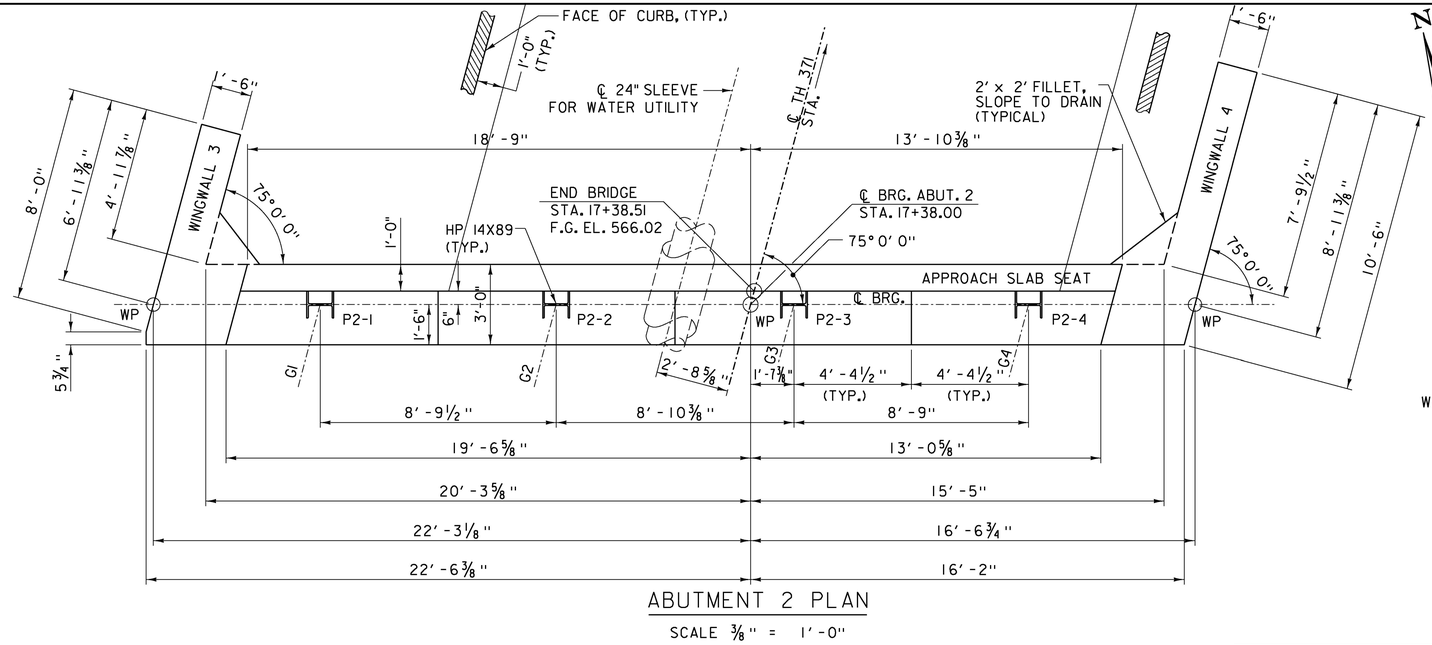

ABUTMENT 2 PLAN

SCALE ⅜" = 1'-0"

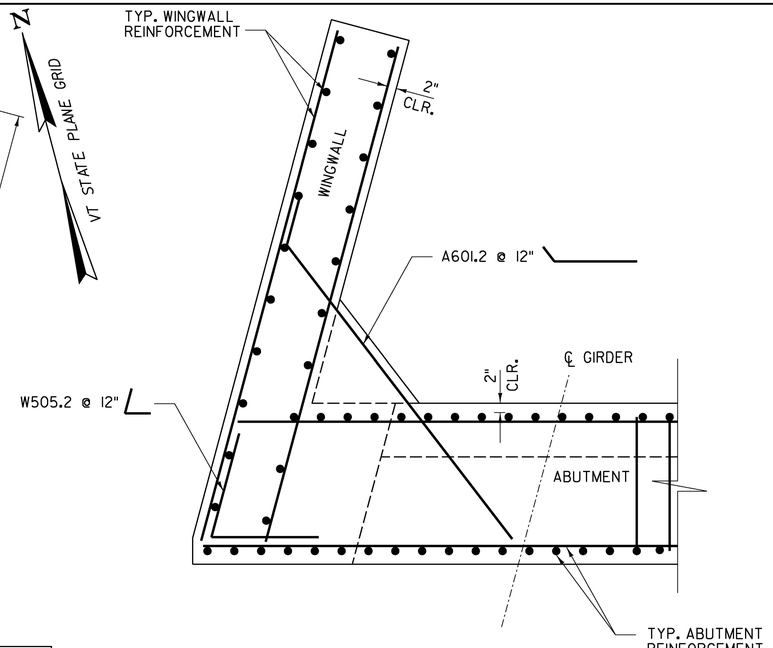

TYPICAL CORNER DETAIL
WINGWALLS 2 & 3 - BELOW BEAM SEAT

SCALE ¾" = 1'-0"

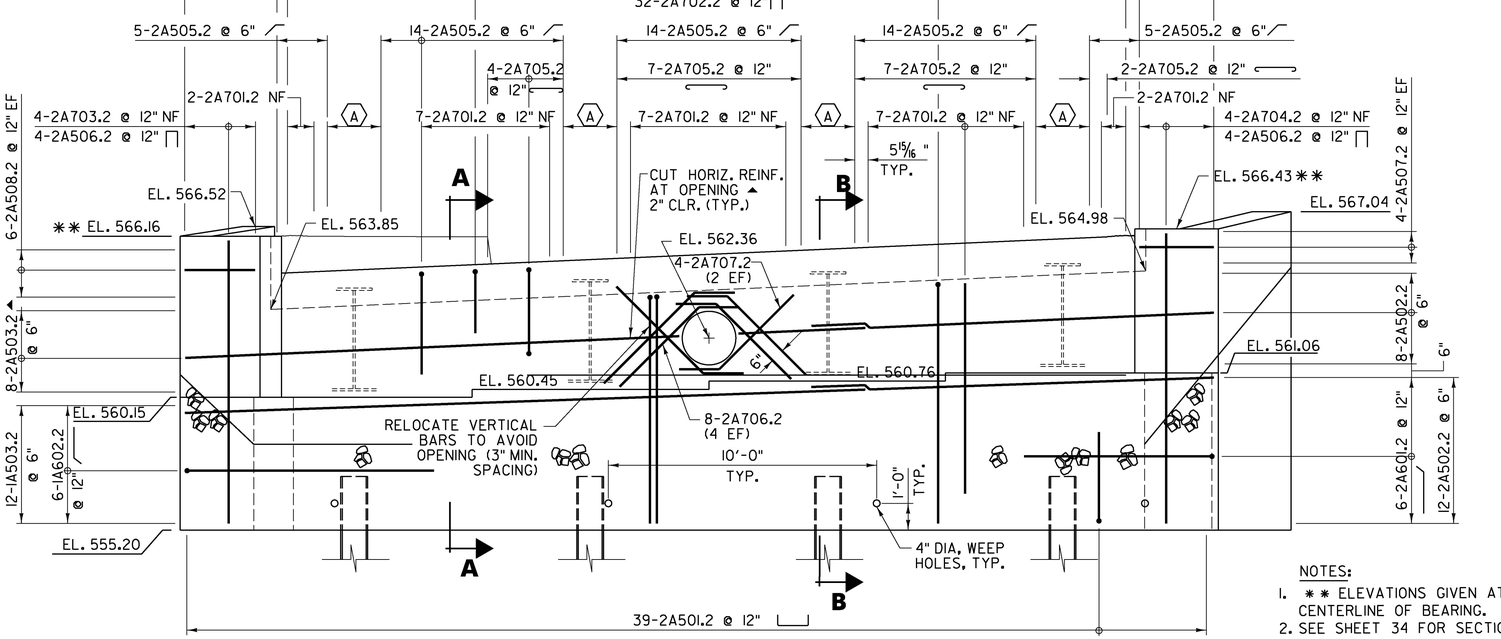

ABUTMENT 2 ELEVATION

SCALE ⅜" = 1'-0"

LEGEND

(A) 5-2A504.2 @ 6" NF

LEGEND:

NF = NEAR FACE
FF = FAR FACE
EF = EACH FACE
▲ = CUT TO FIT IN FIELD

NOTES:

1. ** ELEVATIONS GIVEN AT CENTERLINE OF BEARING.
2. SEE SHEET 34 FOR SECTIONS A-A & B-B.
3. SEE SHEET 29 FOR DECK REINFORCING BARS NOT SHOWN.
4. SEE SHEET 36 FOR WINGWALL REINFORCING BARS NOT SHOWN.
5. 3" CLEAR UNLESS OTHERWISE SPECIFIED ON THE PLANS.

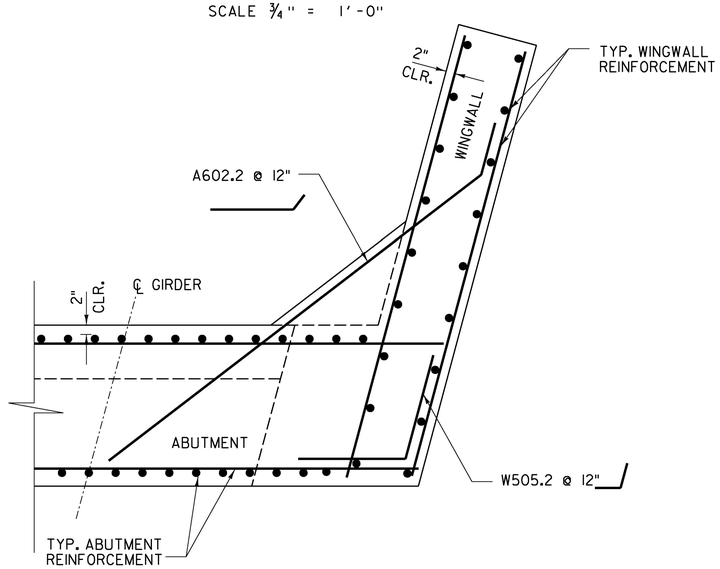

TYPICAL CORNER DETAIL
WINGWALLS 1 & 4 - BELOW BEAM SEAT

SCALE ¾" = 1'-0"

Stantec

PROJECT NAME:	ST JOHNSBURY
PROJECT NUMBER:	BRO 1447(30)
FILE NAME: z12j164abuts.dgn	PLOT DATE: 9/30/2016
PROJECT LEADER: M. CHENETTE	DRAWN BY: L. BUXTON
DESIGNED BY: N. TIRK	CHECKED BY: T. KNIGHT/N. TIRK
ABUTMENT 2 PLAN & ELEVATION	SHEET 35 OF 76

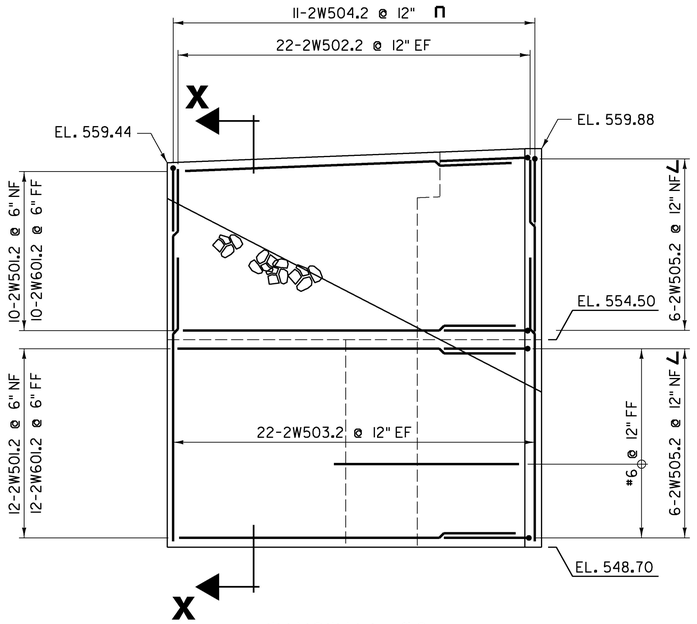

WINGWALL #2
SCALE: ½" = 1'-0"

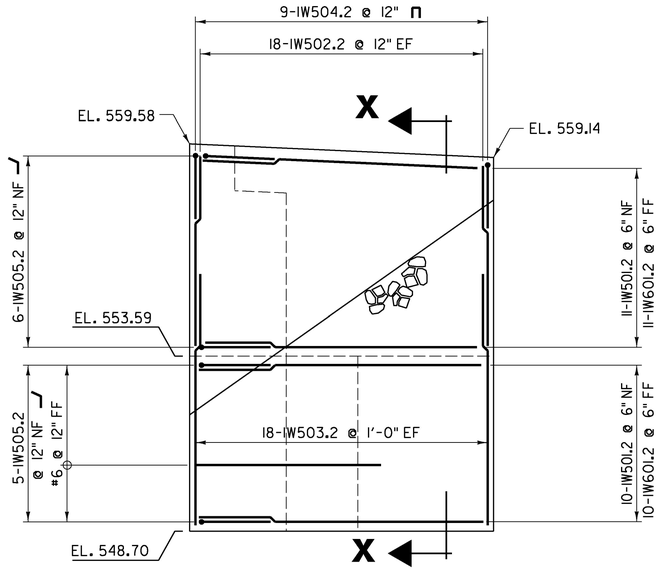

WINGWALL #1
SCALE: ½" = 1'-0"

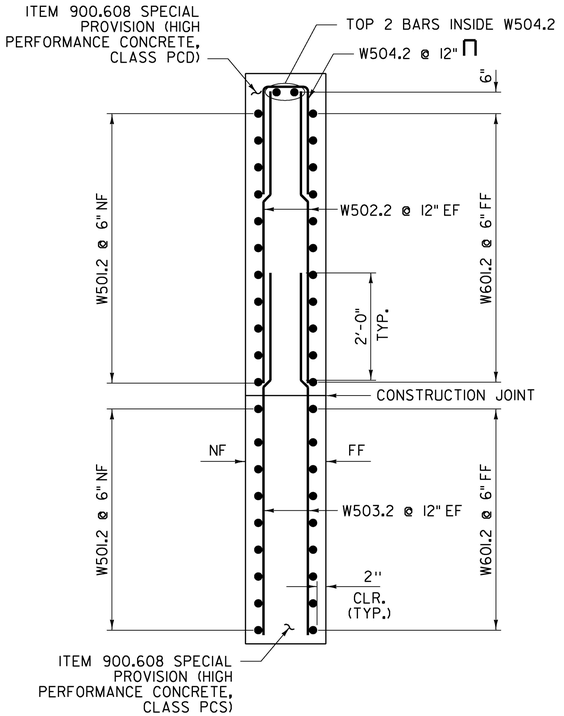

SECTION X-X
SCALE ¾" = 1'-0"

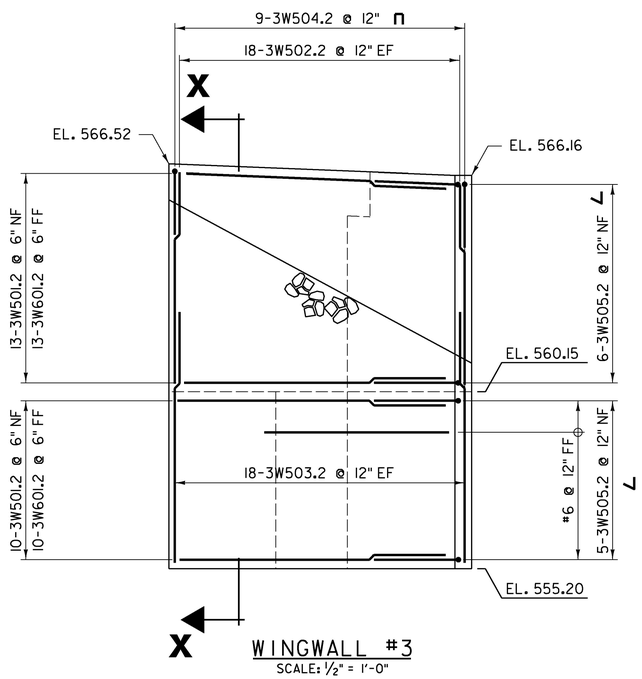

WINGWALL #3
SCALE: ½" = 1'-0"

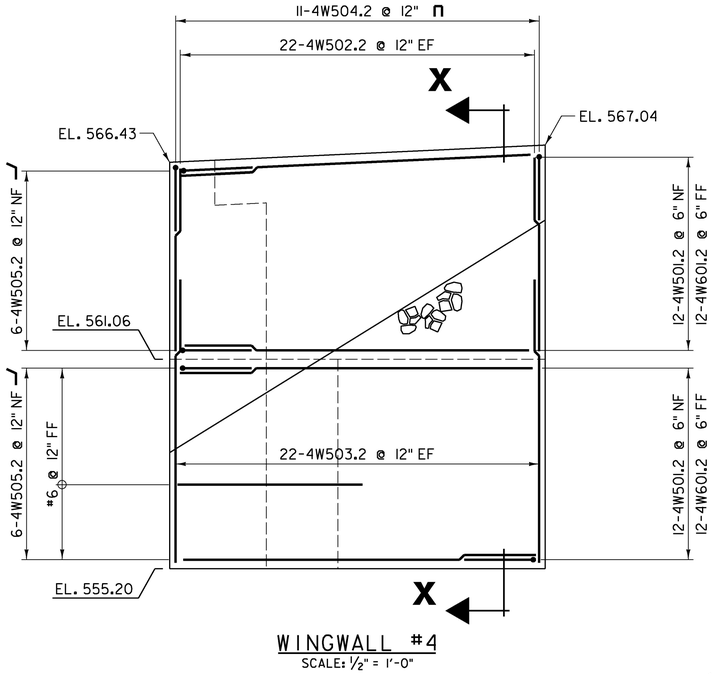

WINGWALL #4
SCALE: ½" = 1'-0"

NOTES:

NF = NEAR FACE
FF = FAR FACE
EF = EACH FACE
▲ = CUT TO FIT IN FIELD

ALL LAPS ARE 2'-0" (MIN.) UNLESS OTHERWISE SPECIFIED ON THE PLANS.

3" CLEAR UNLESS OTHERWISE SPECIFIED ON THE PLANS.

Stantec

PROJECT NAME:	ST JOHNSBURY
PROJECT NUMBER:	BRO 1447(30)
FILE NAME: z12j164abuts.dgn	PLOT DATE: 9/30/2016
PROJECT LEADER: M. CHENETTE	DRAWN BY: L. BUXTON
DESIGNED BY: N. TIRK	CHECKED BY: N. TIRK
WINGWALLS	SHEET 36 OF 76

STATE OF VERMONT
AGENCY OF TRANSPORTATION

REINFORCING STEEL SCHEDULE

ITEM	EACH	SIZE	LENGTH	MARK	TYPE	A	B	C	D	E	F	G	H	J	K	R	O
	DECK																
✳	170	4	12'- 0"	S401.2	S5	2'- 2"	3'- 7"	6"	3'- 7"			2'- 2"					
	169	4	10'- 0"	S402.2	S5	2'- 2"	2'- 7"	6"	2'- 7"			2'- 2"					
✳	5	4	8'- 0"	S403.2	S4	---	3'- 9"	6"	3'- 9"			---					
	4	4	10'- 0"	S404.2	S4	---	4'- 9"	6"	4'- 9"			---					
	213	5	38'- 9"	S501.2	STR												
	373	5	32'- 3"	S502.2	STR												
✳	225	5	9'- 4"	S503.2	18	7"	8'- 9"	---						5"			
	112	5	10'- 7"	S504.2	S5	10"	1'- 5"	6'- 4"	1'- 2"			10"					
✳	129	5	8'- 4"	S505.2	17		2'- 6"	5'- 10"	---								
	10	5	7'- 2"	S506.2	S4	---	3'- 4"	6"	3'- 4"			---					
	64	5	24'- 0"	S507.2	STR												
	APPROACH SLAB NO. 1																
△	23	5	22'- 3"	1AS501.2	STR												
△	29	9	21'- 0"	1AS901.2	1	1'- 6"	19'- 6"					---		9"			
	APPROACH SLAB NO. 2																
	21	5	22'- 3"	2AS501.2	STR												
	27	9	21'- 0"	2AS901.2	1	1'- 6"	19'- 6"					---		9"			
	ABUTMENT NO. 1																
	39	5	8'- 5"	1A501.2	17		2'- 11"	2'- 7"	2'- 11"								
	20	5	15'- 0"	1A502.2	STR												
▲	20	5	25'- 4"	1A503.2	STR												
	20	5	7'- 1"	1A504.2	17		2'- 7"	4'- 6"	---								
△	55	5	7'- 6"	1A505.2	19		2'- 0"	5'- 6"	---				3'- 10"		3'- 10"		---
	6	5	7'- 3"	1A506.2	17		2'- 4"	2'- 7"	2'- 4"								
	6	5	2'- 9"	1A507.2	STR												
	6	5	2'- 8"	1A508.2	STR												
△	8	6	7'- 10"	1A601.2	19		10"	7'- 0"	---				8"		6"		---
	6	6	9'- 11"	1A602.2	19		10"	9'- 1"	---				6"		8"		---
	25	7	8'- 1"	1A701.2	STR												
	32	7	9'- 9"	1A702.2	17		3'- 7"	2'- 7"	3'- 7"								
✳	4	7	10'- 8"	1A703.2	STR												
✳	4	7	10'- 4"	1A704.2	STR												
	20	7	5'- 5"	1A705.2	1	10"	4'- 7"					---		7"			
	8	7	6'- 3"	1A706.2	19		1'- 6"	4'- 9"	---				1'- 1"		1'- 1"		---
	4	7	5'- 5"	1A707.2	19		1'- 6"	3'- 11"	---				1'- 1"		1'- 1"		---
	64	8	9'- 1"	1A801.2	1	11"	8'- 2"					---		8"			
✳	7	8	10'- 8"	1A802.2	STR												
✳	7	8	10'- 4"	1A803.2	STR												
	ABUTMENT NO. 2																
	39	5	8'- 5"	2A501.2	17		2'- 11"	2'- 7"	2'- 11"								
	20	5	15'- 0"	2A502.2	STR												
▲	20	5	25'- 4"	2A503.2	STR												
	20	5	7'- 1"	2A504.2	17		2'- 7"	4'- 6"	---								
△	54	5	7'- 6"	2A505.2	19		2'- 0"	5'- 6"	---				3'- 10"		3'- 10"		
	8	5	7'- 3"	2A506.2	17		2'- 4"	2'- 7"	2'- 4"								
	4	5	2'- 9"	2A507.2	STR												
	6	5	2'- 8"	2A508.2	STR												
△	8	6	7'- 10"	2A601.2	19		10"	7'- 0"	---				8"		6"		
	6	6	9'- 11"	2A602.2	19		10"	9'- 1"	---				6"		8"		
	25	7	8'- 2"	2A701.2	STR												
	32	7	8'- 9"	2A702.2	17		3'- 1"	2'- 7"	3'- 1"								
✳	5	7	10'- 5"	2A703.2	STR												
✳	5	7	10'- 8"	2A704.2	STR												
	20	7	5'- 5"	2A705.2	1	10"	4'- 7"					---		7"			
	8	7	6'- 3"	2A706.2	19		1'- 6"	4'- 9"	---				1'- 1"		1'- 1"		---
	4	7	5'- 5"	2A707.2	19		1'- 6"	3'- 11"	---				1'- 1"		1'- 1"		---
	64	8	9'- 1"	2A801.2	1		11"	8'- 2"				---		8"			
✳	9	8	10'- 5"	2A802.2	STR												
✳	7	8	10'- 8"	2A803.2	STR												
	WINGWALL NO. 1																
	21	5	8'- 0"	1W501.2	STR												
	18	5	5'- 2"	1W502.2	STR												
	18	5	6'- 9"	1W503.2	STR												
	9	5	5'- 10"	1W504.2	S10		2'- 5"	1'- 0"	2'- 5"								
	11	5	4'- 0"	1W505.2	19		2'- 0"	2'- 0"	---				6"		1'- 11"		---
	21	6	8'- 0"	1W601.2	STR												

ITEM	EACH	SIZE	LENGTH	MARK	TYPE	A	B	C	D	E	F	G	H	J	K	R	O
	WINGWALL NO. 2																
	22	5	9'- 6"	2W501.2	STR												
	22	5	4'- 8"	2W502.2	STR												
	22	5	7'- 8"	2W503.2	STR												
	11	5	5'- 10"	2W504.2	S10	2'- 5"	1'- 0"	2'- 5"									
	12	5	4'- 8"	2W505.2	27	2'- 4"	2'- 4"	---						7"		2'- 3"	
	22	6	9'- 6"	2W601.2	STR												
	WINGWALL NO. 3																
	23	5	7'- 6"	3W501.2	STR												
	18	5	5'- 9"	3W502.2	STR												
	18	5	6'- 10"	3W503.2	STR												
	9	5	5'- 10"	3W504.2	S10	2'- 5"	1'- 0"	2'- 5"									
	11	5	4'- 8"	3W505.2	27	2'- 4"	2'- 4"	---						7"		2'- 3"	
	23	6	7'- 6"	3W601.2	STR												
	WINGWALL NO. 4																
	24	5	10'- 0"	4W501.2	STR												
	22	5	5'- 1"	4W502.2	STR												
	22	5	7'- 9"	4W503.2	STR												
	11	5	6'- 2"	4W504.2	S10	2'- 7"	1'- 0"	2'- 7"									
	12	5	4'- 0"	4W505.2	19	2'- 0"	2'- 0"	---						6"		1'- 11"	---
	24	6	10'- 0"	4W601.2	STR												

~ NOTES ~

1. UNLESS OTHERWISE DESIGNATED, ALL BAR REINFORCEMENT FOR CONCRETE IN SIZES UP TO AND INCLUDING NO. 18 SHALL CONFORM TO THE REQUIREMENTS OF THE "SPECIFICATIONS FOR DEFORMED BILLET-STEEL BARS FOR CONCRETE REINFORCEMENT", AASHTO M 31 (ASTM A 615-SI). ALL BARS SHALL BE GRADE 60, UNLESS OTHERWISE DESIGNATED.
2. FOR TYPICAL BENDING DETAILS, RECOMMENDED PIN DIAMETER "D" OF BENDS AND HOOKS, AND OTHER STANDARD PRACTICE, SEE CURRENT CONCRETE REINFORCING STEEL INSTITUTE "MANUAL OF STANDARD PRACTICE".
3. BARS WHICH REQUIRE MORE ACCURATE BENDING THAN STANDARD PRACTICES SHOULD HAVE LIMITS INDICATED.
4. ALL DIMENSIONS ARE OUT TO OUT OF BAR EXCEPT "A" AND "G" ON STANDARD 180 DEGREE AND 135 DEGREE HOOKS.
5. "J" DIMENSION ON 180 DEGREE HOOKS TO BE SHOWN ONLY WHERE NECESSARY TO RESTRICT HOOK SIZE. OTHERWISE, STANDARD HOOKS ARE TO BE USED.
6. "H" DIMENSION ON STIRRUPS TO BE SHOWN ONLY WHEN NECESSARY TO MAINTAIN CLEARANCES.
7. WHERE SLOPE DIFFERS FROM 45 DEGREES, DIMENSIONS "H" AND "K" MUST BE SHOWN.
8. ▲ DENOTES BARS TO BE CUT IN FIELD.
9. ✳ DENOTES ONE EXTRA BAR ADDED FOR TESTING PURPOSES.
10. △ DENOTES TWO EXTRA BARS ADDED FOR TESTING PURPOSES.
11. E IN BAR MARK PREFIX DENOTES EPOXY COATED REINFORCING STEEL.

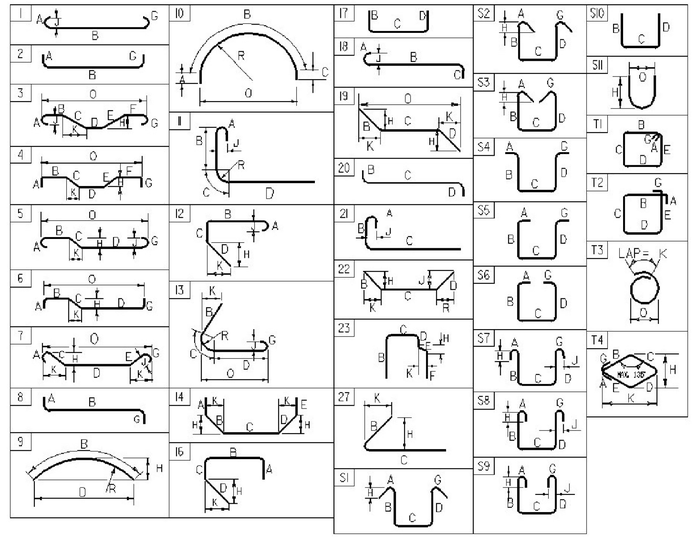

ASTM STANDARD REINFORCING BARS

BAR SIZE DESIGNATION	WEIGHT POUNDS PER FOOT	NOMINAL DIMENSIONS ROUND SECTION		
		DIAMETER INCHES	AREA INCHES ^{2}	PERIMETER INCHES
#3	0.376	0.375	0.11	1.178
#4	0.668	0.500	0.20	1.571
#5	1.043	0.625	0.31	1.963
#6	1.502	0.750	0.44	2.356
#7	2.044	0.875	0.60	2.749
#8	2.670	1.000	0.79	3.142
#9	3.400	1.128	1.00	3.544
#10	4.303	1.270	1.27	3.990
#11	5.313	1.410	1.56	4.430
#14	7.65	1.693	2.25	5.32
#18	13.60	2.257	4.00	7.09

PROJECT NAME: **ST. JOHNSBURY**
PROJECT NUMBER: **BRO 1447(30)**

FILE NAME:
PROJECT MANAGER: **M. CHENETTE**
DESIGNED BY: **T. KNIGHT**
REINFORCING STEEL SCHEDULE SHEET #1

PLOT DATE: **2/18/2016**
DRAWN BY: **J. SOTER**
CHECKED BY: **M. CHENETTE**
SHEET **37** OF **76**

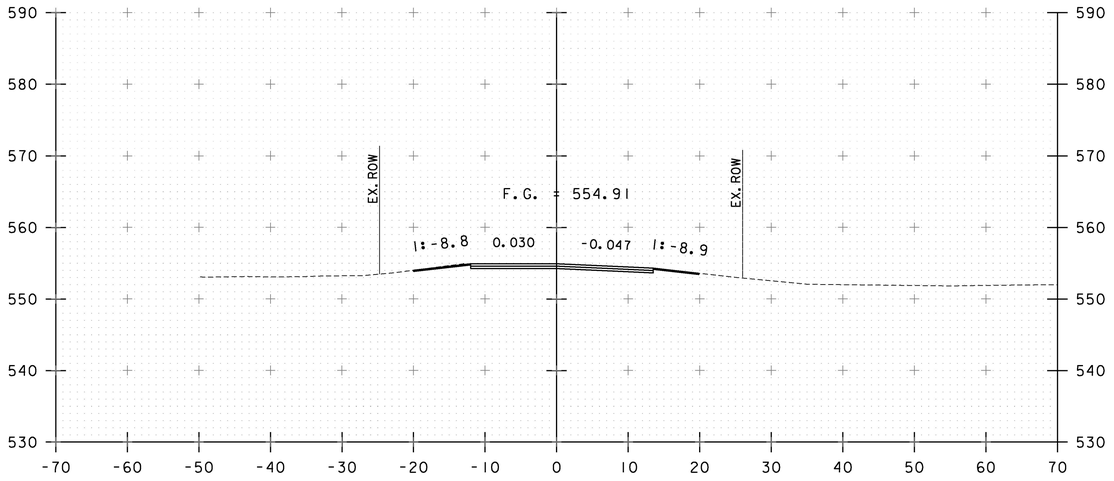

15+00

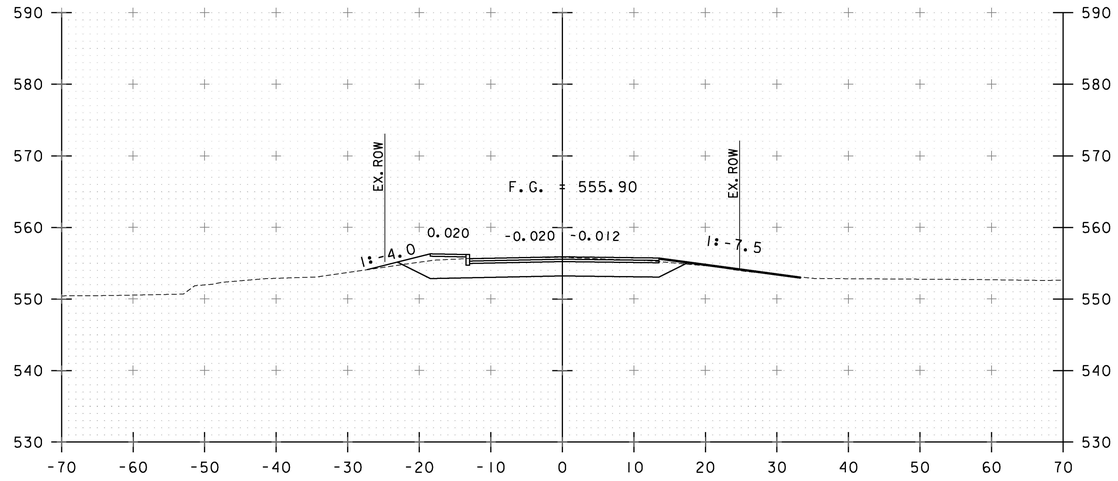

15+50
BEGIN PROJECT

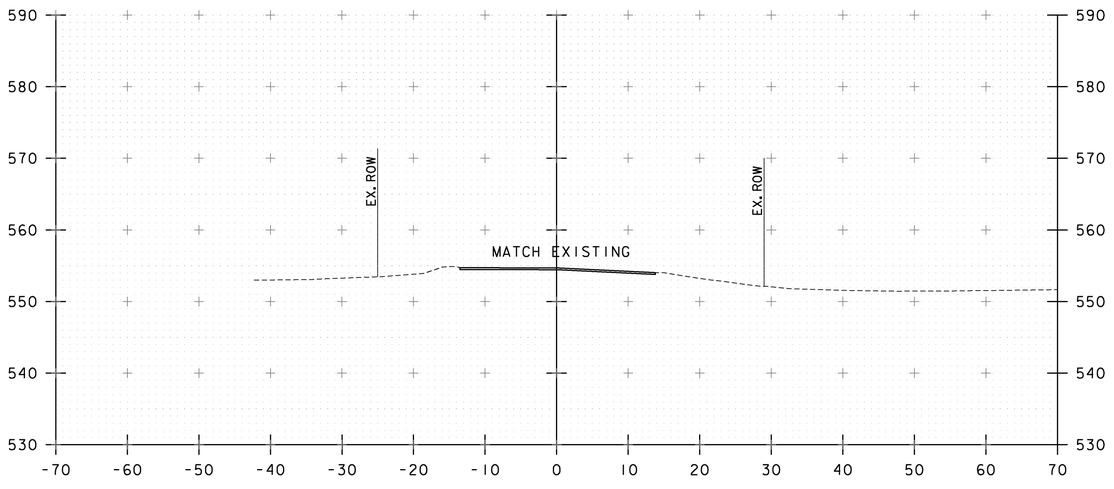

14+75
14+50
BEGIN APPROACH

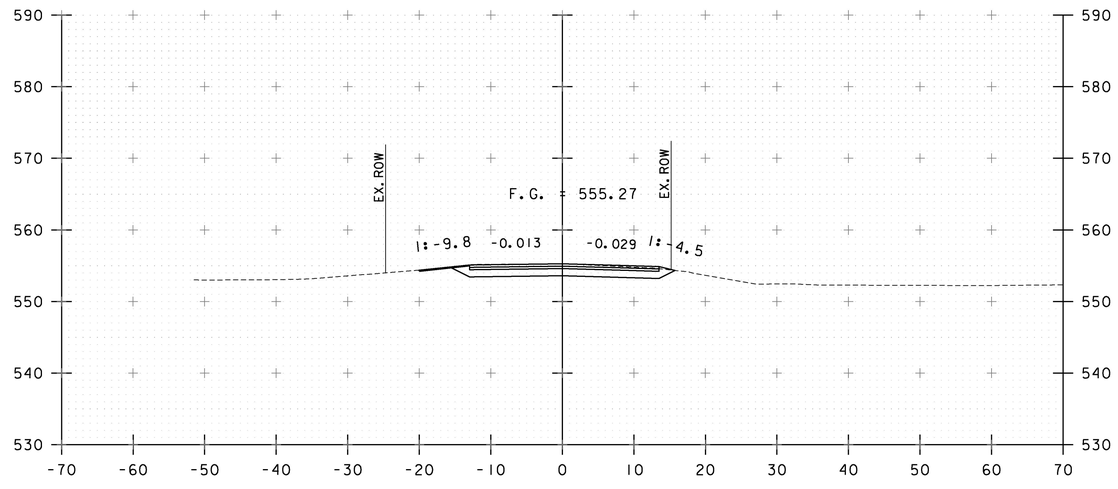

15+25

STA. 14+75 TO STA. 15+50

PROJECT NAME: ST JOHNSBURY
PROJECT NUMBER: BRO 1447(30)

FILE NAME: z12j164xs.dgn
PROJECT LEADER: M. CHENETTE
DESIGNED BY: I. MAYNARD
ROADWAY CROSS SECTIONS - RXS 1

PLOT DATE: 9/30/2016
DRAWN BY: I. MAYNARD
CHECKED BY: G. SANTY
SHEET 38 OF 76

0 10 20
SCALE: 1" = 10'

Stantec

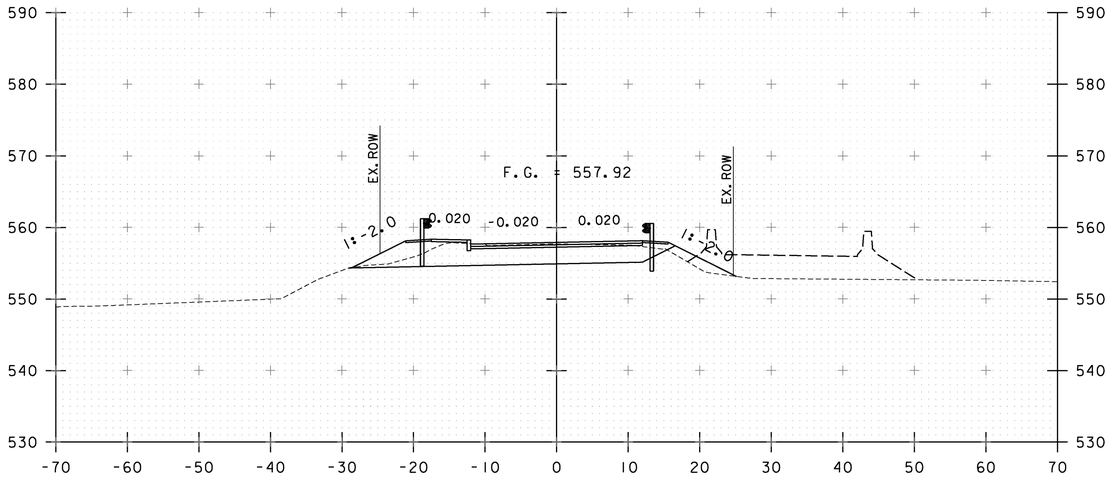

16+00

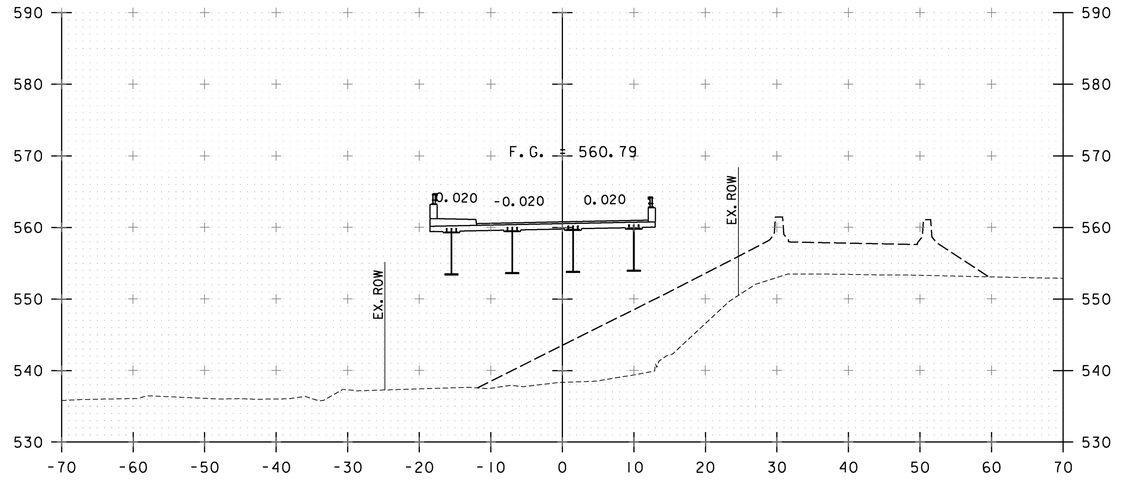

16+50
16+26.49
BEGIN BRIDGE

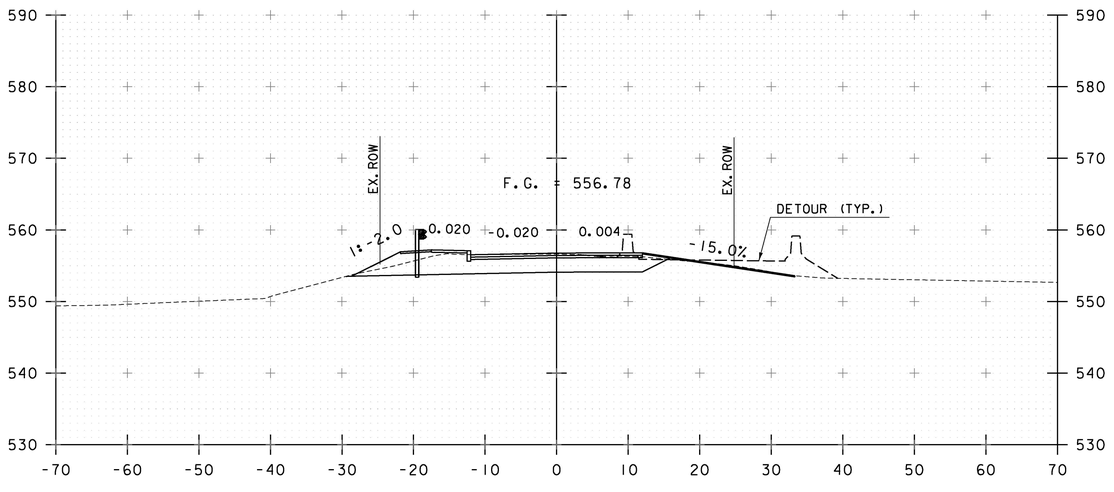

15+75

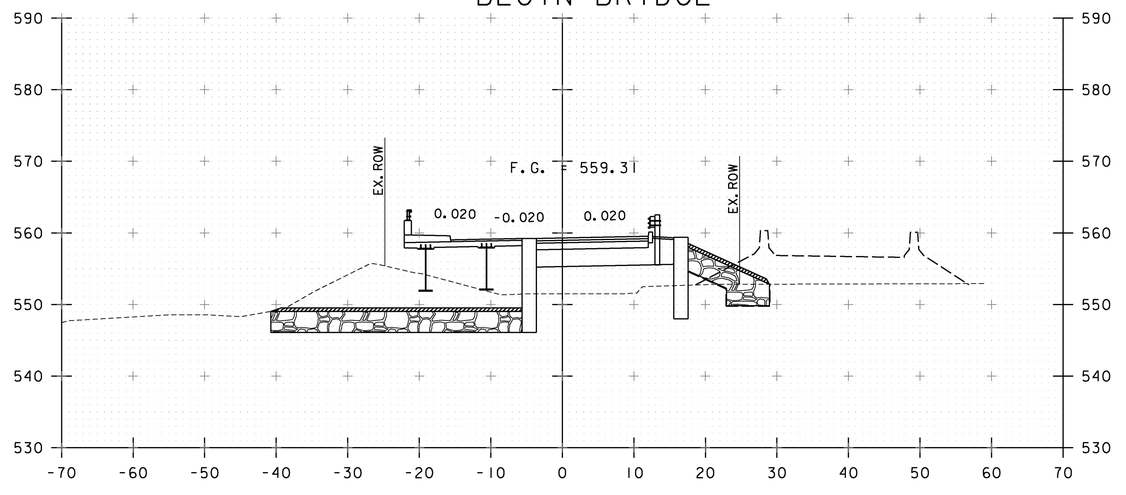

16+25

STA. 15+75 TO STA. 16+50

0 10 20
SCALE: 1" = 10'

Stantec

PROJECT NAME: ST JOHNSBURY
PROJECT NUMBER: BRO 1447(30)

FILE NAME: z12j164xs.dgn
PROJECT LEADER: M. CHENETTE
DESIGNED BY: I. MAYNARD
ROADWAY CROSS SECTIONS - RXS 2

PLOT DATE: 9/30/2016
DRAWN BY: I. MAYNARD
CHECKED BY: G. SANTY
SHEET 39 OF 76

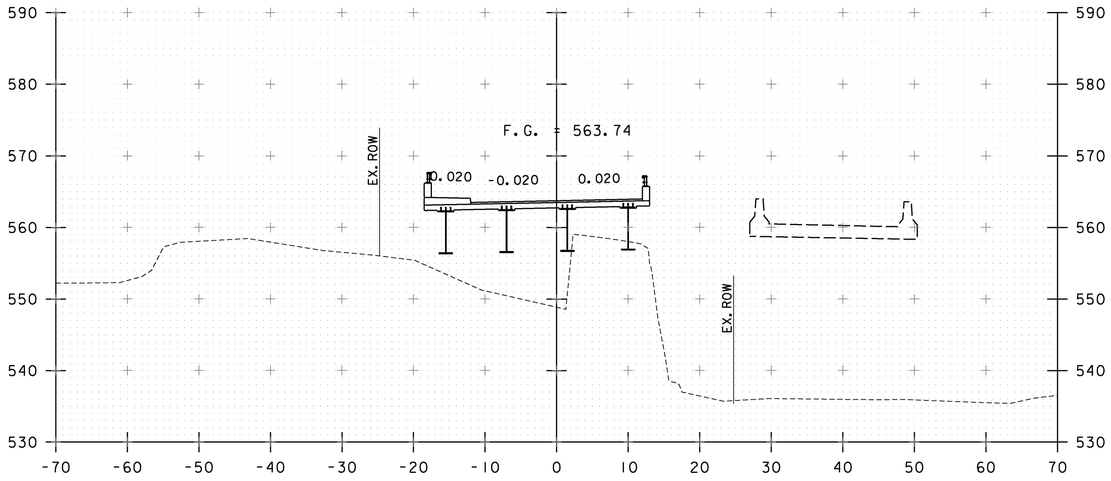

17+00

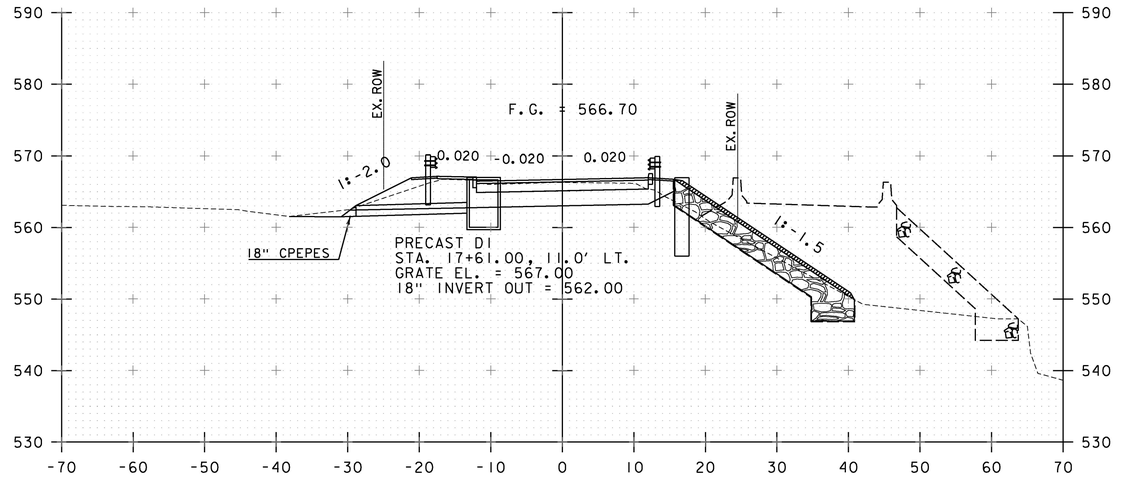

17+50

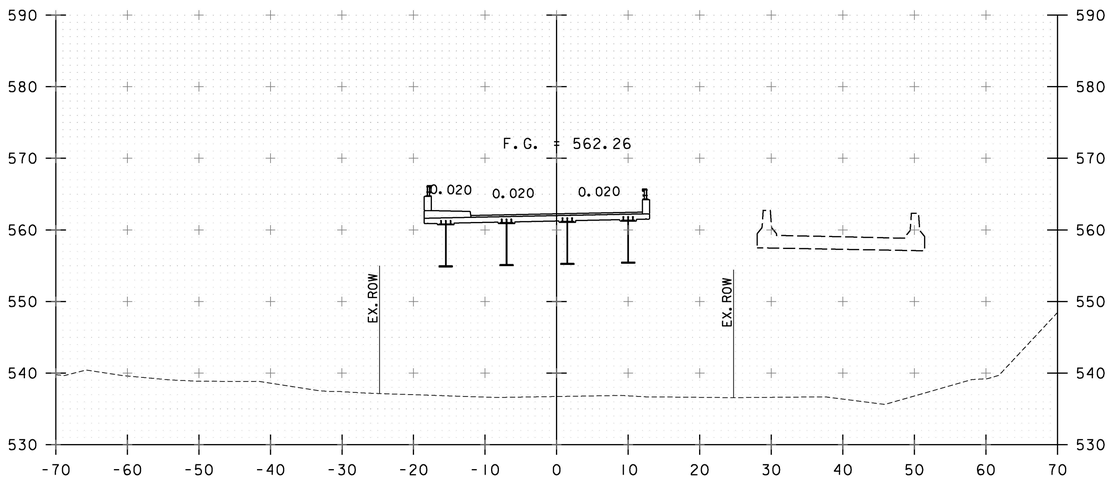

16+75

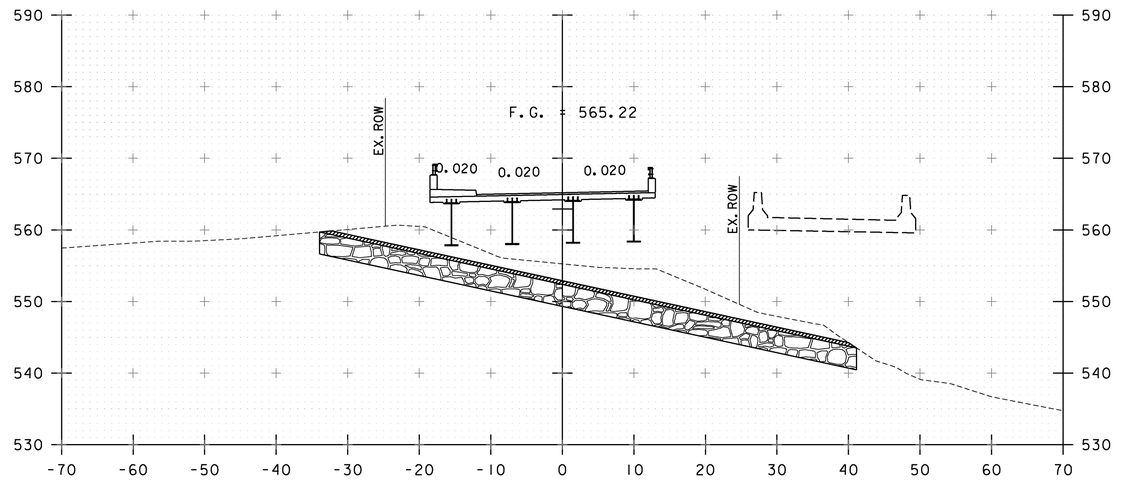

17+25
17+38.51
END BRIDGE

STA. 16+75 TO STA. 17+50

PROJECT NAME: ST JOHNSBURY
PROJECT NUMBER: BRO 1447(30)

FILE NAME: z12j164xs.dgn
PROJECT LEADER: M. CHENETTE
DESIGNED BY: I. MAYNARD
ROADWAY CROSS SECTIONS - RXS 3

PLOT DATE: 9/30/2016
DRAWN BY: I. MAYNARD
CHECKED BY: G. SANTY
SHEET 40 OF 76

0 10 20
SCALE: 1" = 10'

Stantec

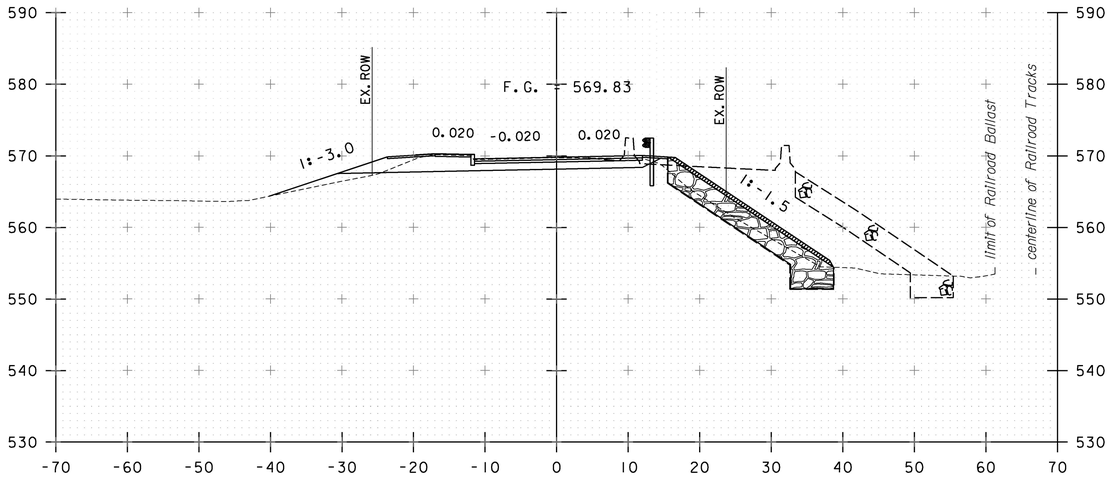

18+00

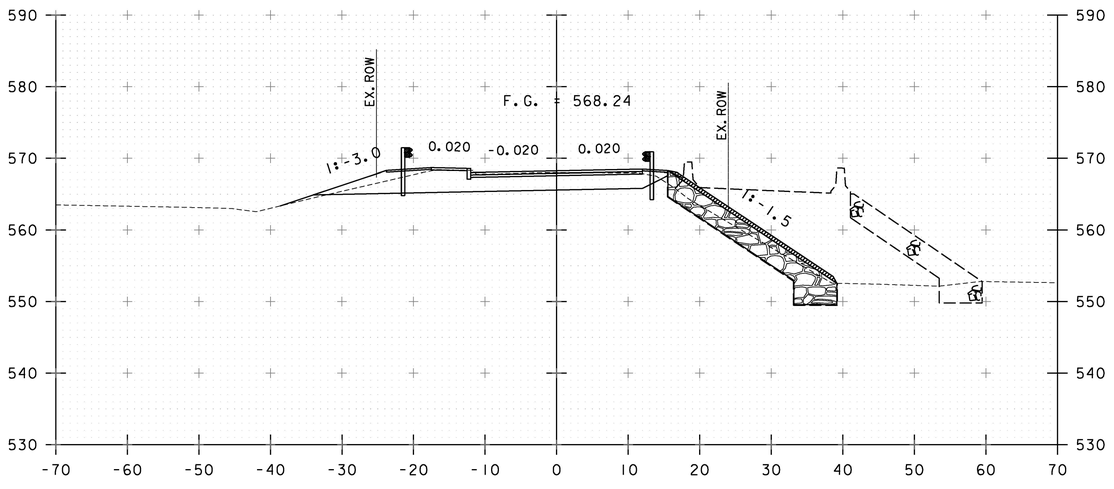

17+75
END PROJECT

18+75
END APPROACH

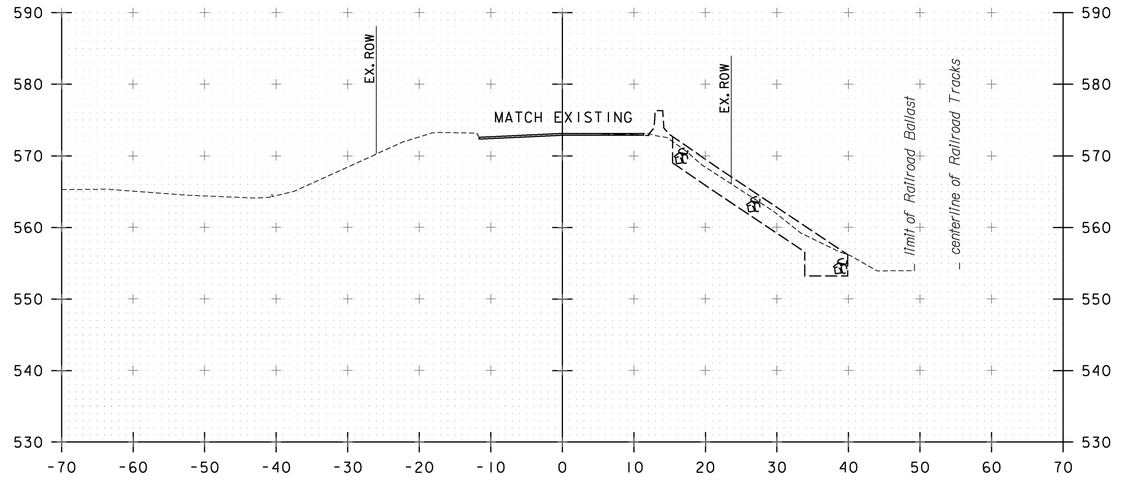

18+50

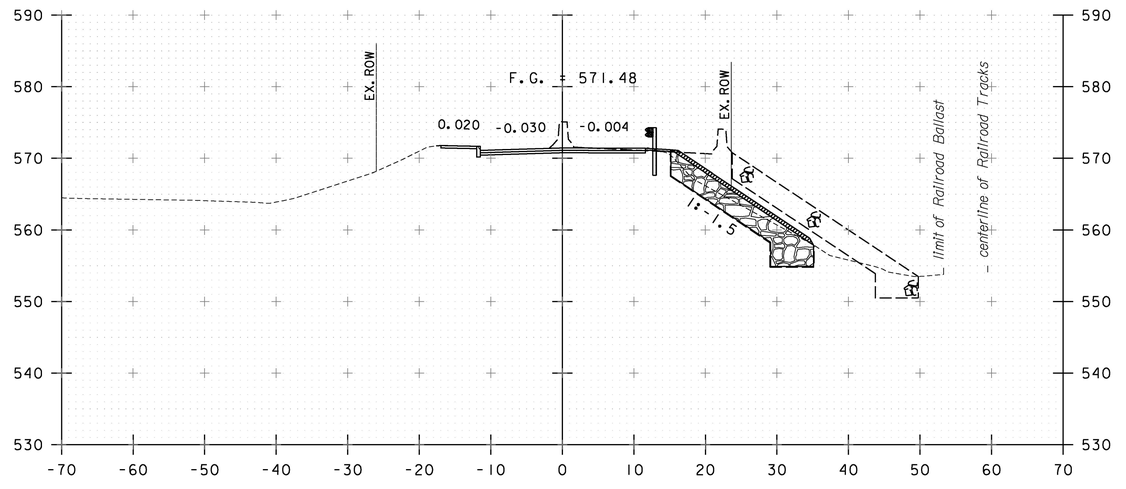

18+25

STA. 17+75 TO STA. 18+50

PROJECT NAME: ST JOHNSBURY
PROJECT NUMBER: BRO 1447(30)

FILE NAME: z12j164xs.dgn
PROJECT LEADER: M. CHENETTE
DESIGNED BY: I. MAYNARD
ROADWAY CROSS SECTIONS - RXS 4

PLOT DATE: 9/30/2016
DRAWN BY: I. MAYNARD
CHECKED BY: G. SANTY
SHEET 41 OF 76

0 10 20
SCALE: 1" = 10'

Stantec

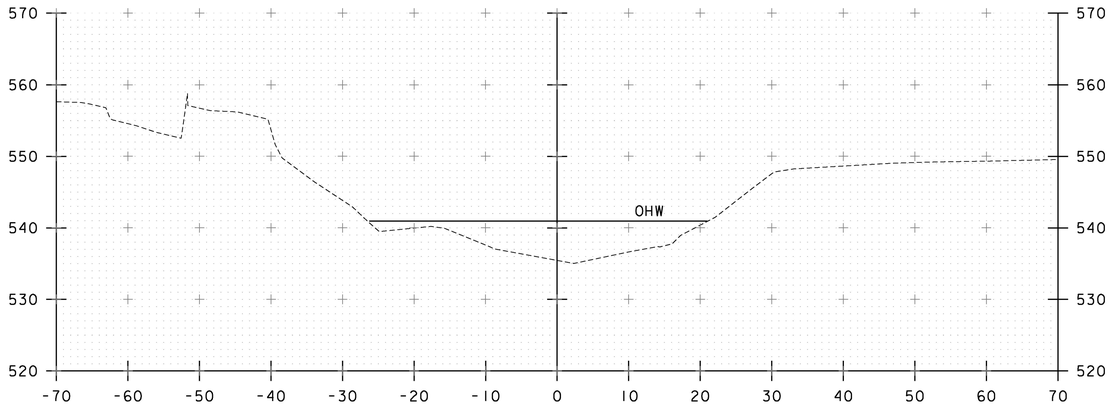

50+25

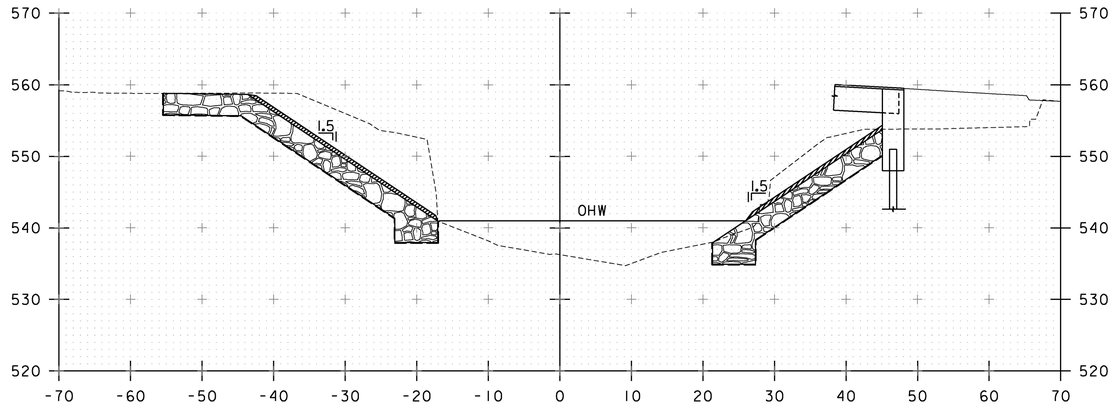

50+70

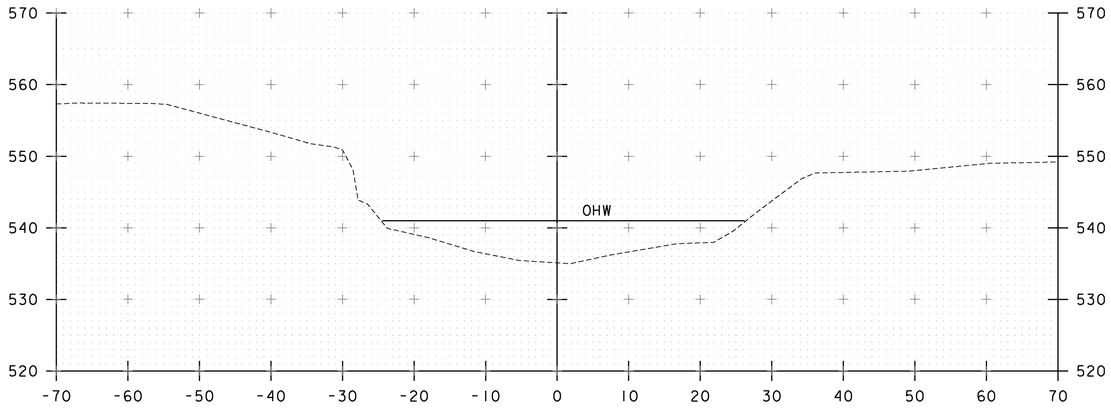

50+00

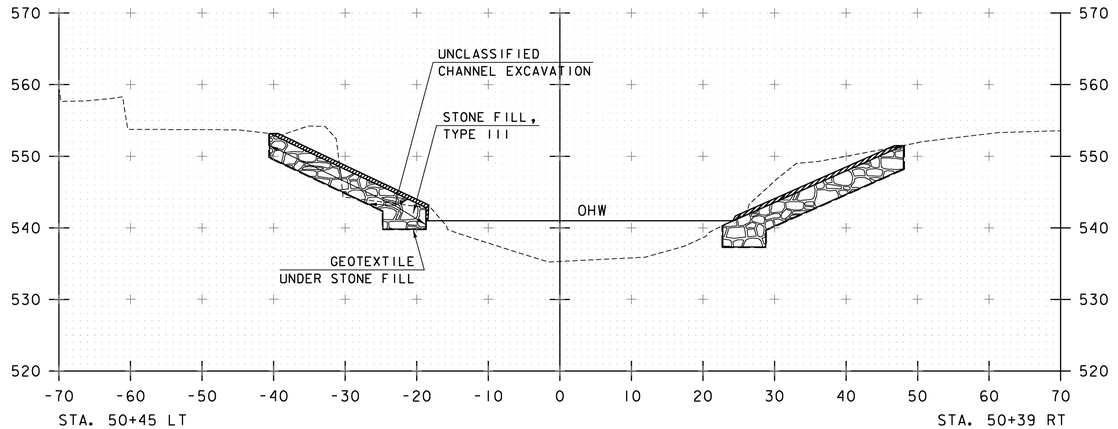

STA. 50+45 LT
BEGIN UNCLASSIFIED CHANNEL EXCAVATION
BEGIN STONE FILL, TYPE III
BEGIN GEOTEXTILE UNDER STONE FILL
BEGIN GRUBBING MATERIAL

50+50

STA. 50+39 RT
BEGIN UNCLASSIFIED CHANNEL EXCAVATION
BEGIN STONE FILL, TYPE III
BEGIN GEOTEXTILE UNDER STONE FILL
BEGIN GRUBBING MATERIAL

STA. 50+00 TO STA. 50+70

0 10 20
SCALE: 1" = 10'

Stantec

PROJECT NAME: ST JOHNSBURY
PROJECT NUMBER: BRO 1447(30)

FILE NAME: z12j164xs.dgn
PROJECT LEADER: M. CHENETTE
DESIGNED BY: I. MAYNARD
CHANNEL CROSS SECTIONS - CXS 1

PLOT DATE: 9/30/2016
DRAWN BY: J. HUNGERFORD
CHECKED BY: M. CHENETTE
SHEET 42 OF 76

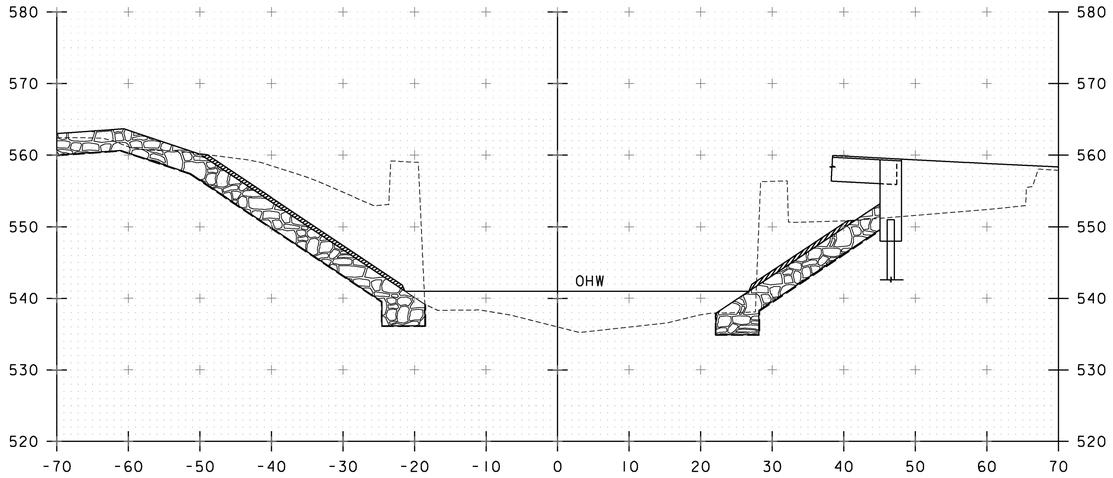

50+90

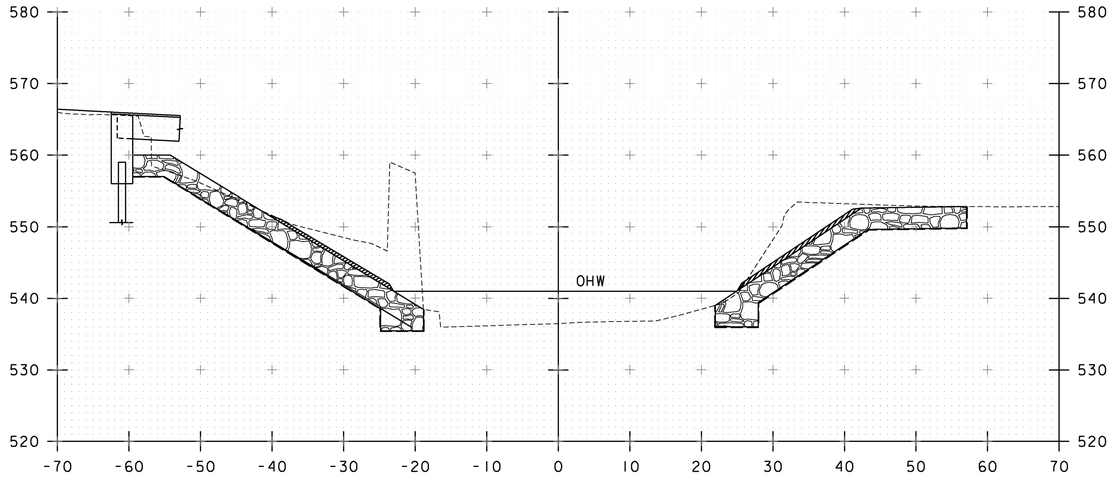

51+14

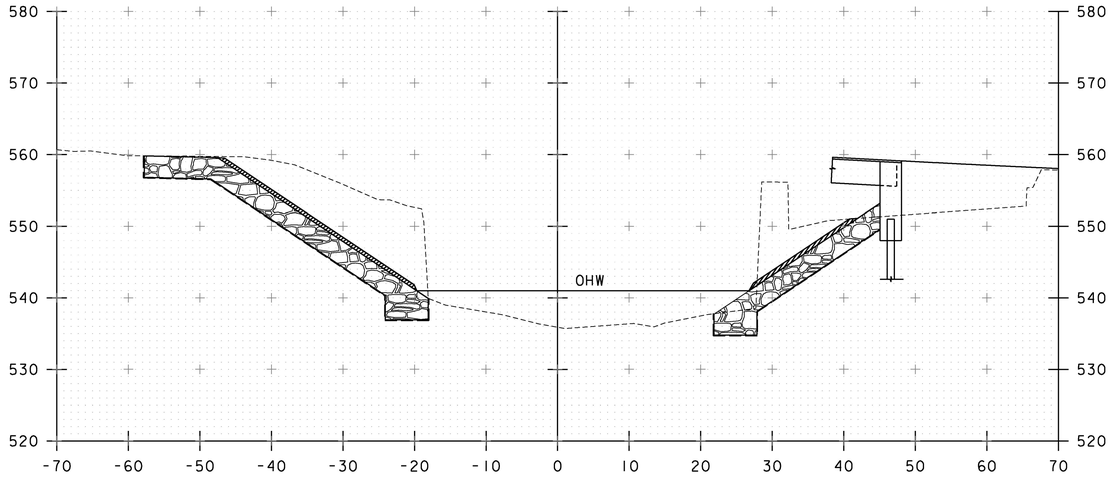

50+81

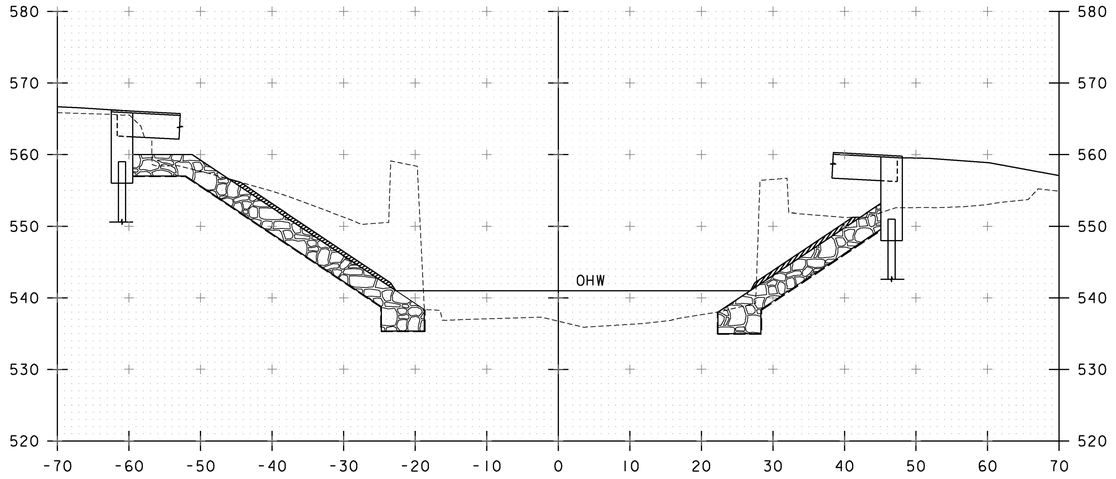

51+00

STA. 50+81 TO STA. 51+14

PROJECT NAME: ST JOHNSBURY
PROJECT NUMBER: BRO 1447(30)

FILE NAME: z12j164xs.dgn
PROJECT LEADER: M. CHENETTE
DESIGNED BY: I. MAYNARD
CHANNEL CROSS SECTIONS - CXS 2

PLOT DATE: 9/30/2016
DRAWN BY: J. HUNGERFORD
CHECKED BY: M. CHENETTE
SHEET 43 OF 76

0 10 20
SCALE: 1" = 10'

Stantec

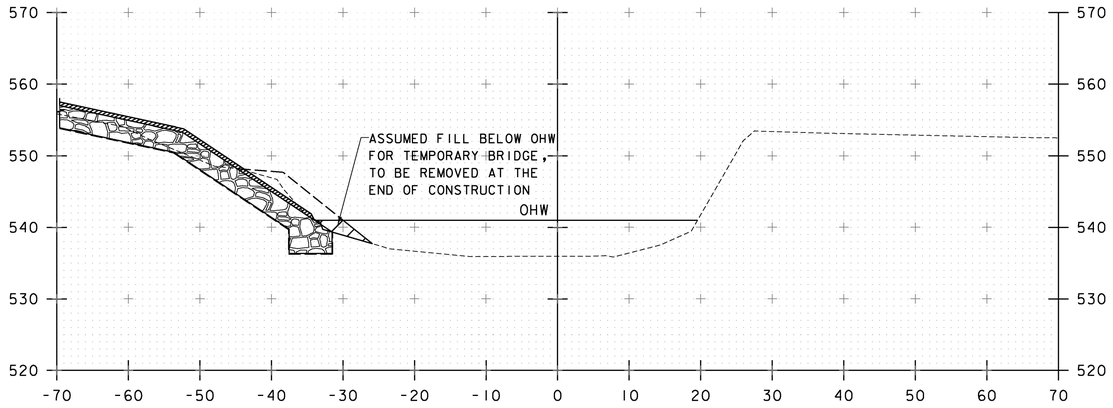

51+50

STA. 51+35 RT
END UNCLASSIFIED CHANNEL EXCAVATION
END STONE FILL, TYPE III
END GEOTEXTILE UNDER STONE FILL
END GRUBBING MATERIAL

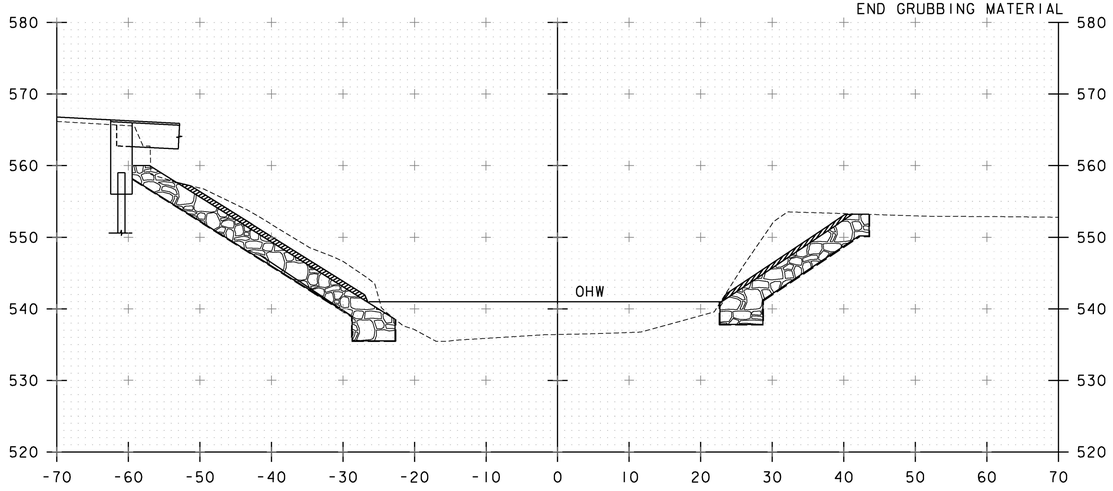

51+25

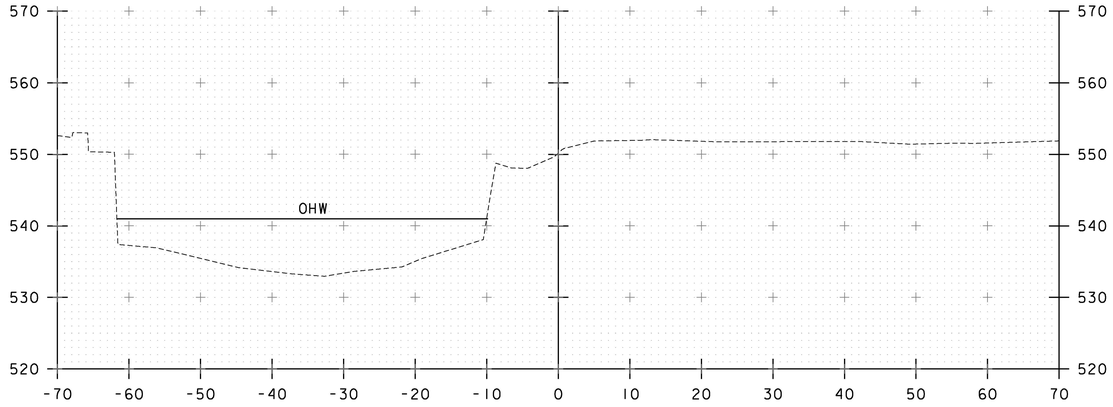

52+00

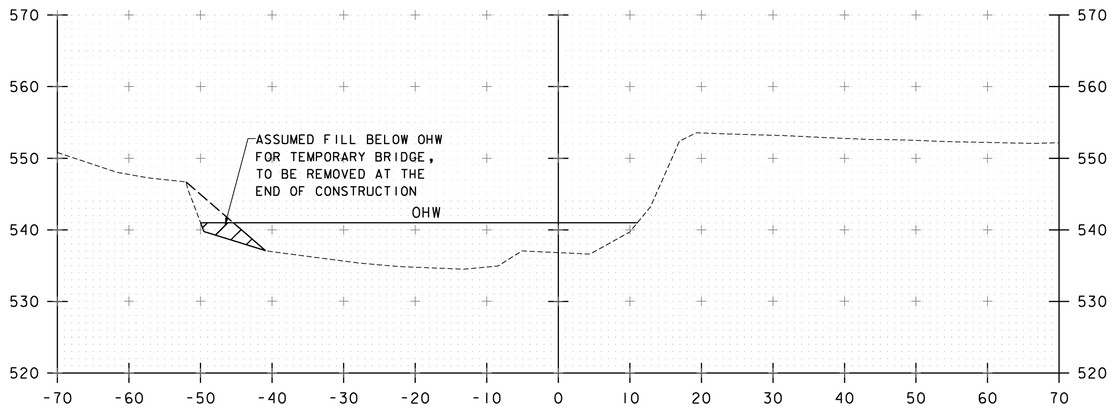

STA. 51+58 LT
END UNCLASSIFIED CHANNEL EXCAVATION
END STONE FILL, TYPE III
END GEOTEXTILE UNDER STONE FILL
END GRUBBING MATERIAL

51+75

STA. 51+25 TO STA. 52+00

PROJECT NAME: ST JOHNSBURY
PROJECT NUMBER: BRO 1447(30)

0 10 20
SCALE: 1" = 10'

Stantec

FILE NAME: z12j164xs.dgn
PROJECT LEADER: M. CHENETTE
DESIGNED BY: I. MAYNARD
CHANNEL CROSS SECTIONS - CXS 3

PLOT DATE: 9/30/2016
DRAWN BY: J. HUNGERFORD
CHECKED BY: M. CHENETTE
SHEET 44 OF 76

EPSC PLAN NARRATIVE

1.1 PROJECT DESCRIPTION

THIS PROJECT INVOLVES THE REPLACEMENT OF BRIDGE #46, RELATED CHANNEL WORK AND INCIDENTALS. BRIDGE #46 WILL BE REPLACED WITH A STEEL GIRDER BRIDGE OVER SLEEPERS RIVER, ON NEW INTEGRAL ABUTMENTS. BRIDGE #46 IS LOCATED IN THE TOWN OF ST. JOHNSBURY, T.H. 371, 0.1 MILES SOUTH OF THE JUNCTION WITH U.S. ROUTE 5. THE LENGTH OF THE BRIDGE WILL BE DECREASED TO 113.07 FEET.

NOTE: AREA OF DISTURBANCE INCLUDES LIMITS OF EARTH DISTURBANCE WITHIN THE PROJECT AREA, AS WELL AS WASTE, BORROW AND STAGING AREAS, AND OTHER EARTH DISTURBING ACTIVITIES WITHIN OR DIRECTLY ADJACENT TO THE PROJECT LIMITS AS SHOWN ON THE ATTACHED EPSC PLAN.

TOTAL AREA OF DISTURBANCE IS APPROXIMATELY 0.65 ACRES.

IT IS ANTICIPATED THAT THIS PROJECT WILL LAST ONE CONSTRUCTION SEASON.

1.2 SITE INVENTORY

1.2.1 TOPOGRAPHY

THE TOPOGRAPHY OF THE IMMEDIATE PROJECT AREA IS HILLY TO MOUNTAINOUS AND FEATURES A MIXTURE OF FORESTED AND OPEN LAND COVER. TOWN HIGHWAY 371 IS WITHIN THE PROJECT SITE. THERE IS ONE HOUSE AND A COMMERCIAL BUILDING ADJACENT TO THE SITE.

1.2.2 DRAINAGE, WATERWAYS, BODIES OF WATER, AND PROXIMITY TO NATURAL OR MAN-MADE WATER FEATURES

THE SLEEPERS RIVER IS THE ONLY WATER SOURCE ON THE PROJECT SITE. THE SLEEPER RIVER IS CLASSIFIED AS SINUOUS TO MEANDERING, WITH SOME ARMORED BANKS. THE STREAM BED CONSISTS OF SILT, SAND, GRAVEL AND SOME STONES. DUE TO THE NATURE OF THE SURROUNDING TERRAIN THE PROJECT SITE COULD RECEIVE RUNOFF WATER FROM NEARBY SLOPES.

1.2.3 VEGETATION

THE VEGETATION IN THE PROJECT AREA CONSISTS OF OPEN GRASSED AREAS, HARDWOOD TREES AND UNDERGROWTH. THERE WILL BE MINOR CLEARING ASSOCIATED WITH THE TEMPORARY DETOUR. THE CHANNEL WILL NOT BE AFFECTED BY CONSTRUCTION. DISTURBED VEGETATION WILL BE REESTABLISHED WITH STANDARD SEED AND MULCH PRACTICES.

1.2.4 SOILS

ALL SOIL DATA CAME FROM THE U.S. DEPARTMENT OF AGRICULTURE SOIL CONSERVATION SERVICE FOR THE COUNTY OF FRANKLIN, VERMONT. SOILS ON THE PROJECT SITE ARE URBAN LAND-ADAMS-NICHOLVILLE COMPLES, 0 TO 8% SLOPES. URBAN LAND SOILS SINCE NON NATIVE AND PLACED DURING PAST CONSTRUCTION ARE NOT ASSIGNED A K-VALUE. THE NEAREST NATIVE SOIL TO THE SITE IS ONDAWA-SUNDAY COMPLEX AND CARRIES A 0.24 K-VALUE.

NOTE: K-VALUES GENERALLY INDICATE THE FOLLOWING:
0.0-0.23 = LOW EROSION POTENTIAL
0.24-0.36 = MODERATE EROSION POTENTIAL
0.37 AND HIGHER = HIGH EROSION POTENTIAL

1.2.5 SENSITIVE RESOURCE AREAS

CRITICAL HABITATS: YES, NLEB (NORTHERN LONG-EARED BAT)
HISTORICAL OR ARCHEOLOGICAL AREAS: ST JOHNSBURY HISTORIC DISTRICT
PRIME AGRICULTURAL LAND: NO
THREATENED AND ENDANGERED SPECIES: YES, NLEB (NORTHERN LONG-EARED BAT)
WATER RESOURCE: SLEEPERS RIVER
WETLANDS: NO

1.3 RISK EVALUATION

THIS PROJECT DOES NOT FALL UNDER THE JURISDICTION OF GENERAL PERMIT 3-9020 FOR STORMWATER RUNOFF FROM CONSTRUCTION SITES. SHOULD CHANGES PRIOR TO OR DURING CONSTRUCTION RESULT IN ONE OR MORE ACRES OF EARTH DISTURBANCE OR SHOULD THE PROJECT BECOME PART OF A LARGER PLAN OF DEVELOPMENT, THE CONTRACTOR WILL BE RESPONSIBLE FOR ANY ADDITIONAL PERMITTING.

1.4 EROSION PREVENTION AND SEDIMENT CONTROL

THE EROSION CONTROL PLANS ARE MEANT AS A GUIDELINE FOR PREVENTING EROSION AND CONTROLLING SEDIMENT TRANSPORT. THE PRINCIPLES OUTLINED IN THIS NARRATIVE CONSIST OF APPLYING MEASURES THROUGHOUT CONSTRUCTION OF THE PROJECT IN ORDER TO MINIMIZE SEDIMENT TRANSPORT TO THE RECEIVING WATERS. THE MEASURES INCLUDE STABILIZATION AND STRUCTURAL PRACTICES, STORM WATER CONTROLS AND OTHER POLLUTION PREVENTION PRACTICES. THEY HAVE BEEN PROPOSED BY THE DESIGNER AS A BASIS FOR PROTECTING RESOURCES AND WILL NEED TO BE BUILT UPON BASED ON THE SPECIFIC MEANS AND METHODS OF THE CONTRACTOR. REFER TO THE LOW RISK SITE HANDBOOK AND APPROPRIATE DETAIL SHEETS FOR SPECIFIC GUIDANCE AND CONSTRUCTION DETAILING.

ALL MEASURES SHALL BE REGULARLY MAINTAINED AND SHALL BE CHECKED FOR SEDIMENT BUILD-UP. SEDIMENT SHALL BE DISPOSED OF AT AN APPPROVED SITE WHERE IT WILL NOT BE SUBJECT TO EROSION.

1.4.1 MARK SITE BOUNDARIES

SITE BOUNDARIES AND AREAS CONSTRUCTION EQUIPMENT CAN ACCESS SHALL BE DELINEATED.

BARRIER FENCE SHALL BE USED TO PHYSICALLY MARK SITE BOUNDARIES.

1.4.2 LIMIT DISTURBANCE AREA

PREVENTING INITIAL SOIL EROSION BY MINIMIZING THE EXPOSED AREA IS MUCH MORE EFFECTIVE THAN TREATING ERODED SEDIMENT. EARTH DISTURBANCE CAN BE MINIMIZED THROUGH CONSTRUCTION PHASING BY ONLY OPENING UP EARTH AS NECESSARY. THIS CAN LIMIT THE AREA THAT WILL BE DISTURBED AND EXPOSED TO EROSION. EMPLOY TEMPORARY CONSTRUCTION STABILIZATION PRACTICES IN INCREMENTAL STAGES AS PHASES CHANGE. FOR PROJECTS WHICH FALL UNDER THE CONSTRUCTION GENERAL PERMIT, ONLY THE ACREAGE LISTED ON THE PERMIT AUTHORIZATION MAY BE EXPOSED AT ANY GIVEN TIME.

MAINTAINING VEGETATED BUFFERS ALONG STREAM BANKS, WETLANDS OR OTHER SENSITIVE AREAS IS A CRUCIAL EROSION AND SEDIMENT CONTROL MEASURE THAT SHOULD BE ESTABLISHED WHEREVER POSSIBLE.

1.4.3 SITE ENTRANCE/EXIT STABILIZATION

TRACKING OF SEDIMENT ONTO PUBLIC HIGHWAYS SHALL BE MINIMIZED TO REDUCE THE POTENTIAL FOR RUNOFF ENTERING RECEIVING WATERS. INSTALLATION SHALL COINCIDE WITH THE CONTRACTOR'S PROGRESS SCHEDULE.

STABILIZED CONSTRUCTION ENTRANCES SHALL BE INSTALLED AS PROPOSED ON THE EPSC PLAN AND ANYWHERE EQUIPMENT WILL BE GOING FROM AREAS OF EXPOSED SOILS TO PAVED SURFACES.

1.4.4 INSTALL SEDIMENT BARRIERS

SEDIMENT BARRIERS SHALL BE UTILIZED TO INTERCEPT RUNOFF AND ALLOW SUSPENDED SEDIMENT TO SETTLE OUT. THEY SHALL BE INSTALLED PRIOR TO ANY UP SLOPE WORK.

SILT FENCE, FILTER CURTAIN AND INLET PROTECTION DEVICES SHALL BE USED IN THE LOCATIONS SHOWN ON THE EPSC PLAN.

1.4.5 DIVERT UPLAND RUNOFF

DIVERSIONARY MEASURES SHALL BE USED TO INTERCEPT RUNOFF FROM ABOVE THE CONSTRUCTION AND DIRECT IT AROUND THE DISTURBED AREA SO THAT CLEAN WATER DOES NOT BECOME MUDDIED WHILE TRAVELING OVER EXPOSED SOILS ON THE CONSTRUCTION SITE.

THE PROJECT AREA IS RELATIVELY FLAT WITH MINIMAL OFF-SITE RUNOFF FLOWING THROUGH THE SITE. THERFORE DIVERSION MEASURES WILL NOT BE NECESSARY.

1.4.6 SLOW DOWN CHANNELIZED RUNOFF

THERE IS NO DITCHING ASSOCIATED WITH THIS PROJECT. IT IS NOT ANTICIPIPATED THAT DEVICES FOR REDUCING VELOCITIES OF CHANNELIZED RUNOFF WILL BE REQUIRED.

1.4.7 CONSTRUCT PERMANENT CONTROLS

THERE ARE NO PERMANENT STORMWATER TREATMENT DEVICES TO BE INSTALLED WITH THIS PROJECT.

1.4.8 STABILIZE EXPOSED SOILS DURING CONSTRUCTION

ALL AREAS OF DISTURBANCE MUST HAVE TEMPORARY STABILIZATION IN PLACE WITHIN 48 HOURS OF DISTURBANCE OR IN ACCORDANCE WITH THE CONSTRUCTION GENERAL PERMIT 3-9020 AUTHORIZATION.

SURFACE ROUGHENING OF ALL EXPOSED SLOPES, COMBINED WITH TEMPORARY MULCHING, SHALL BE UTILIZED ON A REGULAR BASIS. BIODEGRADABLE EROSION CONTROL MATTING OR AN EQUIVALENT SHALL BE USED TO STABILIZE ALL SLOPES STEEPER THAN 1:3.

THE FORECAST OF RAINFALL EVENTS SHALL TRIGGER IMMEDIATE PROTECTION OF EXPOSED SOILS.

1.4.9 WINTER STABILIZATION

VARIOUS MEASURES SPECIFIC TO WINTER MAY BE NECESSARY SHOULD THE PROJECT EXTEND INTO WINTER (OCTOBER 15 THROUGH APRIL 15). REFER TO THE LOW RISK SITE HANDBOOK FOR GUIDANCE.

1.4.10 STABILIZE SOIL AT FINAL GRADE

EXPOSED SOIL MUST BE STABILIZED WITHIN 48 HOURS OF REACHING FINAL GRADE.

SEED, MULCH, FERTILIZER AND LIME SHALL BE USED TO ESTABLISH PERMANENT VEGETATION. FOR SLOPES STEEPER THAN 1:3, BIODEGRADABLE EROSION CONTROL MATTING OR AN EQUIVALENT SHALL BE USED INSTEAD OF MULCH.

1.4.11 DE-WATERING ACTIVITIES

IT IS NOT ANTICIPATED THAT DEWATERING ACTIVITIES WILL BE REQUIRED.

1.4.12 INSPECT YOUR SITE

INSPECT THE PROJECT SITE BASED ON SPECIAL PROVISION REQUIREMENTS.

1.5 SEQUENCE AND STAGING

THIS SECTION WILL BE DEVELOPED BY THE CONTRACTOR USING THE GUIDANCE OUTLINED IN THE VTRANS EPSC PLAN CONTRACTOR CHECKLIST.

1.5.1 OFF-SITE ACTIVITIES

IN ADDITION TO THE CONTRACTOR CHECKLIST ANY ACTIVITIES OUTSIDE THE CONSTRUCTION LIMITS SHALL FOLLOW SUBSECTIONS 105.25- 105.29 .

Stantec

PROJECT NAME: ST JOHNSBURY
PROJECT NUMBER: BRO 1447(30)

FILE NAME: z12j164frm.dgn
PROJECT LEADER: M. CHENETTE
DESIGNED BY: I. MAYNARD
EPSC NARRATIVE

PLOT DATE: 9/30/2016
DRAWN BY: D. BARNES
CHECKED BY: G. SANTY
SHEET 45 OF 76

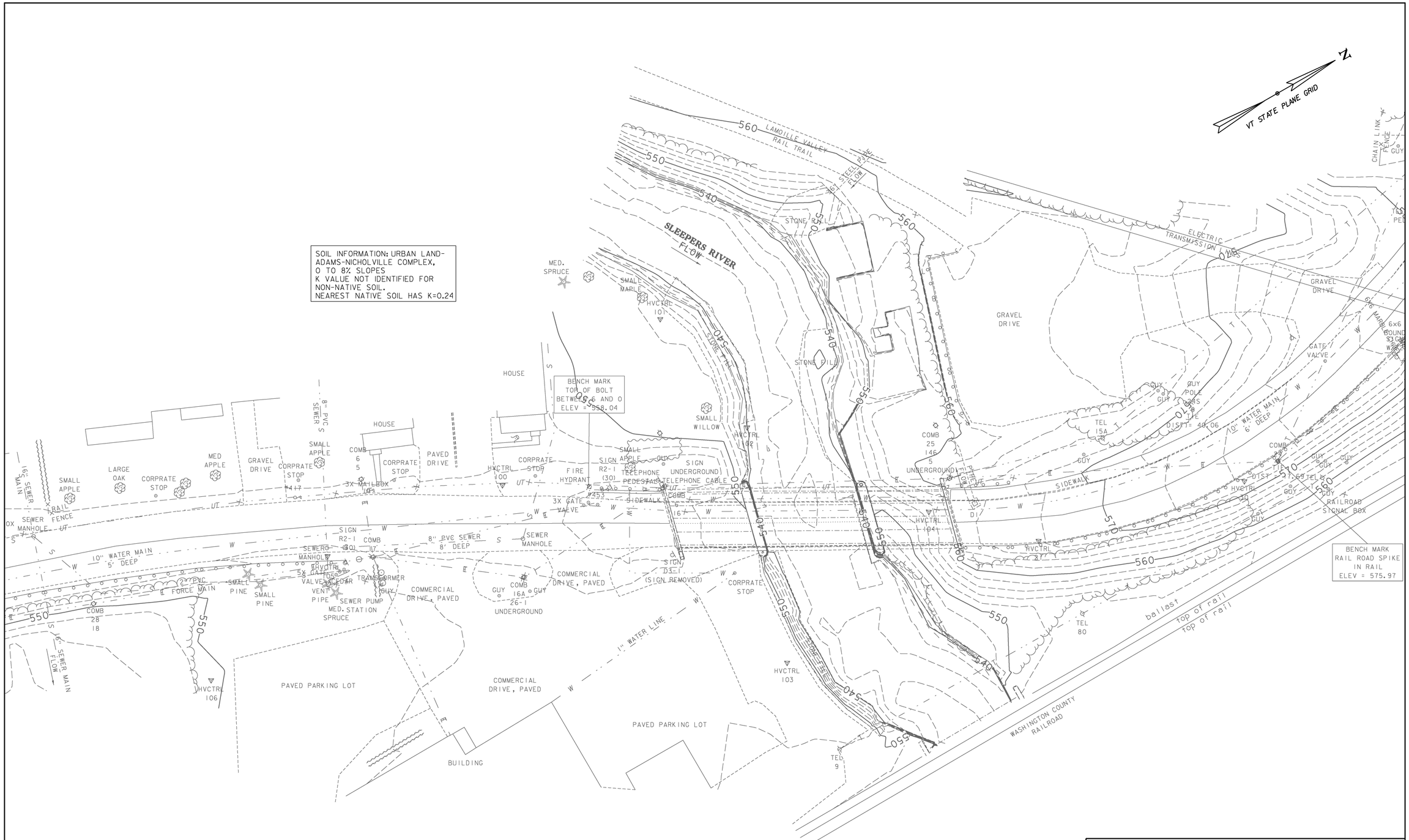

Stantec

PROJECT NAME: ST JOHNSBURY	
PROJECT NUMBER: BRO 1447(30)	
FILE NAME: z12j164bdr_ero.dgn	PLOT DATE: 9/30/2016
PROJECT LEADER: M. CHENETTE	DRAWN BY: D. BARNES
DESIGNED BY: I. MAYNARD	CHECKED BY: G. SANTY
EPSC EXISTING CONDITIONS SITE PLAN	SHEET 46 OF 76

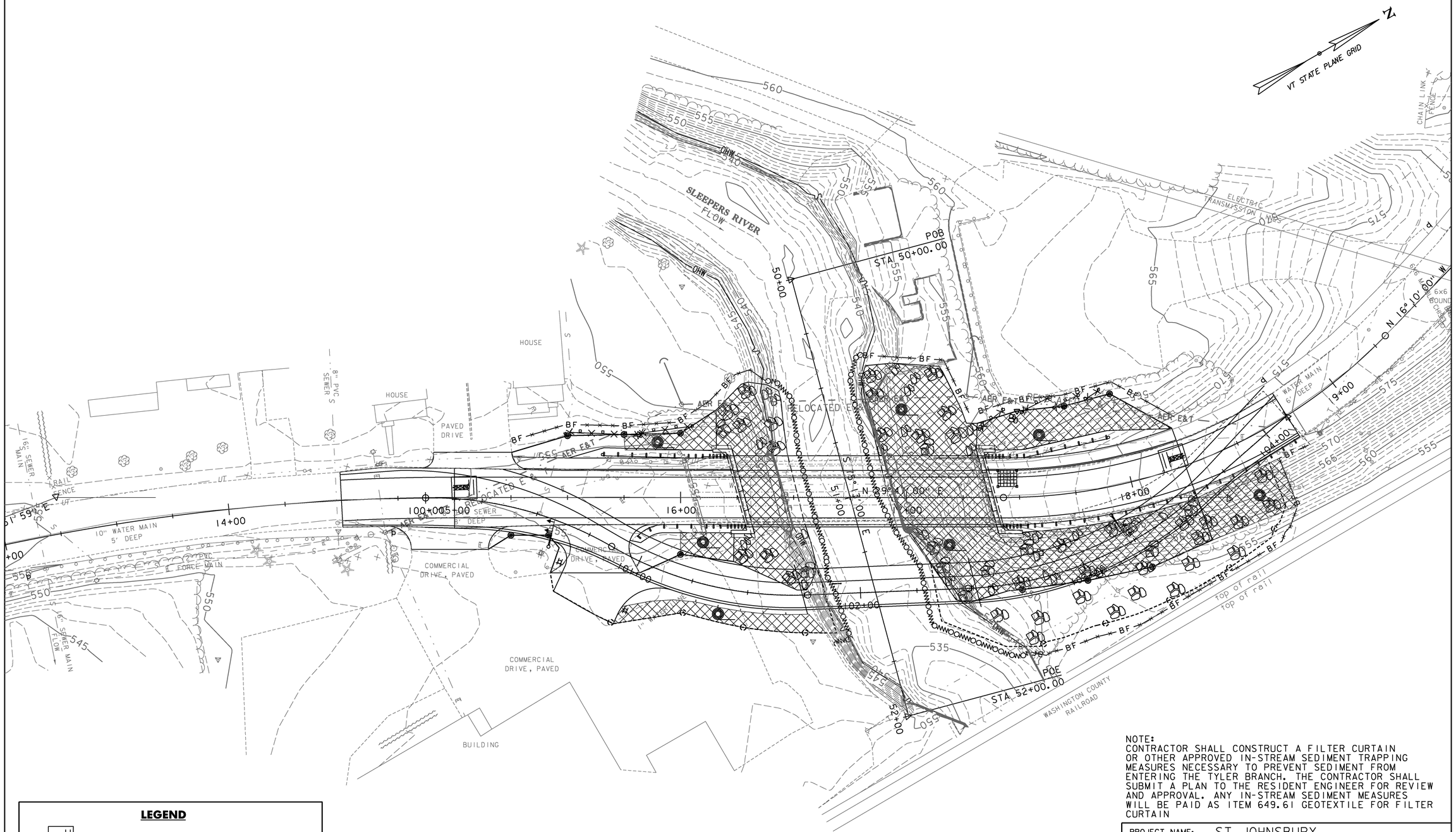

LEGEND

- VEHICLE TRACKING PAD
- INLET PROTECTION DEVICE, FILTER FIBER

NOTE:
CONTRACTOR SHALL CONSTRUCT A FILTER CURTAIN OR OTHER APPROVED IN-STREAM SEDIMENT TRAPPING MEASURES NECESSARY TO PREVENT SEDIMENT FROM ENTERING THE TYLER BRANCH. THE CONTRACTOR SHALL SUBMIT A PLAN TO THE RESIDENT ENGINEER FOR REVIEW AND APPROVAL. ANY IN-STREAM SEDIMENT MEASURES WILL BE PAID AS ITEM 649.61 GEOTEXTILE FOR FILTER CURTAIN

Stantec

PROJECT NAME:	ST JOHNSBURY
PROJECT NUMBER:	BRO 1447(30)
FILE NAME: z12j164bdr_ero.dgn	PLOT DATE: 9/30/2016
PROJECT LEADER: M. CHENETTE	DRAWN BY: D. BARNES
DESIGNED BY: I. MAYNARD	CHECKED BY: G. SANTY
EPSC CONSTRUCTION SITE PLAN	SHEET 47 OF 76

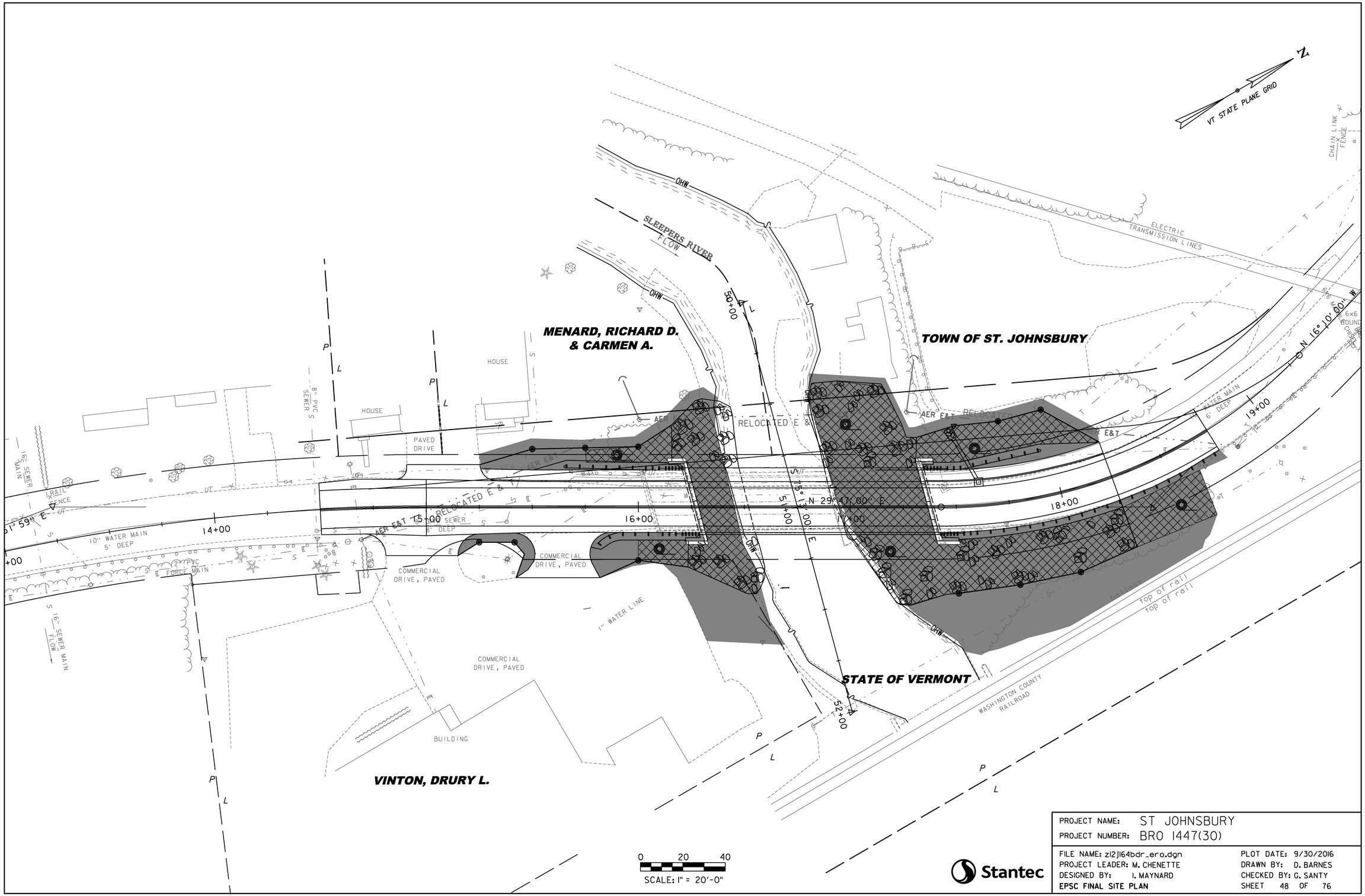

Stantec

PROJECT NAME: ST JOHNSBURY	
PROJECT NUMBER: BRO 1447(30)	
FILE NAME: z12j164bdr_ero.dgn	PLOT DATE: 9/30/2016
PROJECT LEADER: M. CHENETTE	DRAWN BY: D. BARNES
DESIGNED BY: I. MAYNARD	CHECKED BY: G. SANTY
EPSC FINAL SITE PLAN	SHEET 48 OF 76

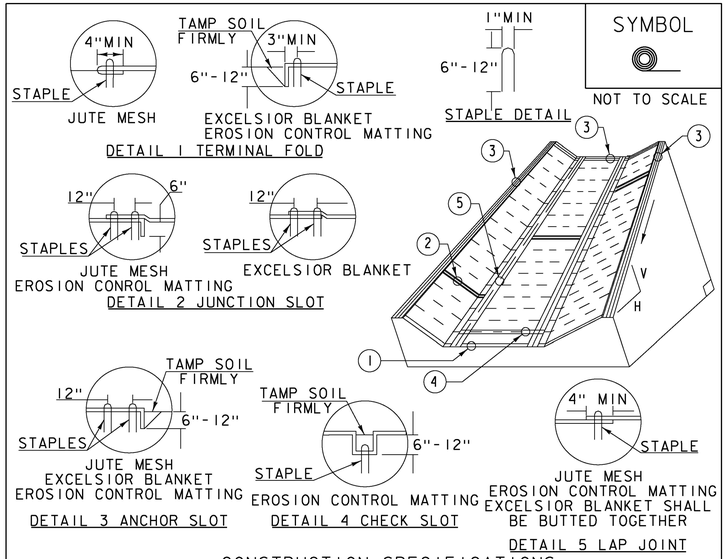

SYMBOL

NOT TO SCALE

CONSTRUCTION SPECIFICATIONS

1. EROSION MATTING, CHECK SLOTS, SHALL BE SPACED IN DITCH CHANNEL SO THAT ONE OCCURS WITHIN EACH 50' ON SLOPES OF MORE THAN 4% AND LESS THAN 6%. ON SLOPES OF 6% OR MORE, THEY SHALL BE SPACED SO THAT ONE OCCURS WITHIN EACH 25'.
2. APPLY FERTILIZER, LIME SEED PRIOR TO PLACING MATTING.
3. STAPLES ARE TO BE PLACED ALTERNATELY, IN COLUMNS APPROXIMATELY 2' APART AND IN ROWS APPROXIMATELY 3' APART. APPROXIMATELY 175 STAPLES ARE REQUIRED PER 4'X225' ROLL OF MATERIAL AND 125 STAPLES ARE REQUIRED PER 4'X150' ROLL OF MATERIAL.
4. DISTURBED AREAS SHALL BE SMOOTHLY GRADED. EROSION CONTROL MATERIAL SHALL BE PLACED LOOSELY OVER GROUND SURFACE. DO NOT STRETCH.
5. ALL TERMINAL ENDS AND TRANSVERSE LAPS SHALL BE STAPLED AT APPROXIMATELY 12" INTERVALS.

ADAPTED FROM DETAILS PROVIDED BY: NEW YORK STATE DEC ORIGINALLY DEVELOPED BY USDA-NRCS VERMONT DEPARTMENT OF ENVIRONMENTAL CONSERVATION

ROLLED EROSION CONTROL PRODUCT (RECP) DITCH

NOTES:
REFER TO "THE VERMONT STANDARDS & SPECIFICATIONS FOR EROSION PREVENTION & SEDIMENT CONTROL -2006- "FROM THE VT AGENCY OF NATURAL RESOURCES FOR ADDITIONAL GUIDANCE.
THIS WORK SHALL BE PERFORMED IN ACCORDANCE WITH SECTION 653 AND AS SHOWN IN THE PLANS FOR TEMPORARY EROSION MATTING (PAY ITEM 653.20) ~~OR PERMANENT EROSION MATTING (PAY ITEM 653.21).~~

REVISIONS	
MARCH 8, 2007	JMF
APRIL 16, 2007	WHF
JANUARY 13, 2009	WHF

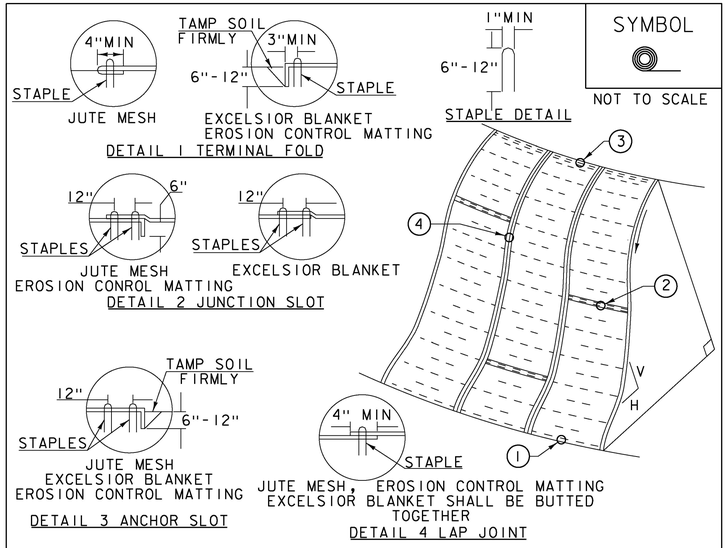

SYMBOL

NOT TO SCALE

CONSTRUCTION SPECIFICATIONS

1. APPLY TO SLOPES GREATER THAN 3H:1V OR WHERE NECESSARY TO AID IN ESTABLISHING VEGETATION.
2. APPLY FERTILIZER, LIME SEED PRIOR TO PLACING MATTING.
3. STAPLES ARE TO BE PLACED ALTERNATELY, IN COLUMNS APPROXIMATELY 2' APART AND IN ROWS APPROXIMATELY 3' APART. APPROXIMATELY 175 STAPLES ARE REQUIRED PER 4'X225' ROLL OF MATERIAL AND 125 STAPLES ARE REQUIRED PER 4'X150' ROLL OF MATERIAL.
4. DISTURBED AREAS SHALL BE SMOOTHLY GRADED. EROSION CONTROL MATERIAL SHALL BE PLACED LOOSELY OVER GROUND SURFACE. DO NOT STRETCH.
5. ALL TERMINAL ENDS AND TRANSVERSE LAPS SHALL BE STAPLED AT APPROXIMATELY 12" INTERVALS.

ADAPTED FROM DETAILS PROVIDED BY: NEW YORK STATE DEC ORIGINALLY DEVELOPED BY USDA-NRCS VERMONT DEPARTMENT OF ENVIRONMENTAL CONSERVATION

ROLLED EROSION CONTROL PRODUCT (RECP) SIDE SLOPE

NOTES:
REFER TO "THE VERMONT STANDARDS & SPECIFICATIONS FOR EROSION PREVENTION & SEDIMENT CONTROL -2006- "FROM THE VT AGENCY OF NATURAL RESOURCES FOR ADDITIONAL GUIDANCE.
THIS WORK SHALL BE PERFORMED IN ACCORDANCE WITH SECTION 653 AND AS SHOWN IN THE PLANS FOR TEMPORARY EROSION MATTING (PAY ITEM 653.20) ~~OR PERMANENT EROSION MATTING (PAY ITEM 653.21).~~

REVISIONS	
APRIL 16, 2007	JMF
JANUARY 13, 2009	WHF

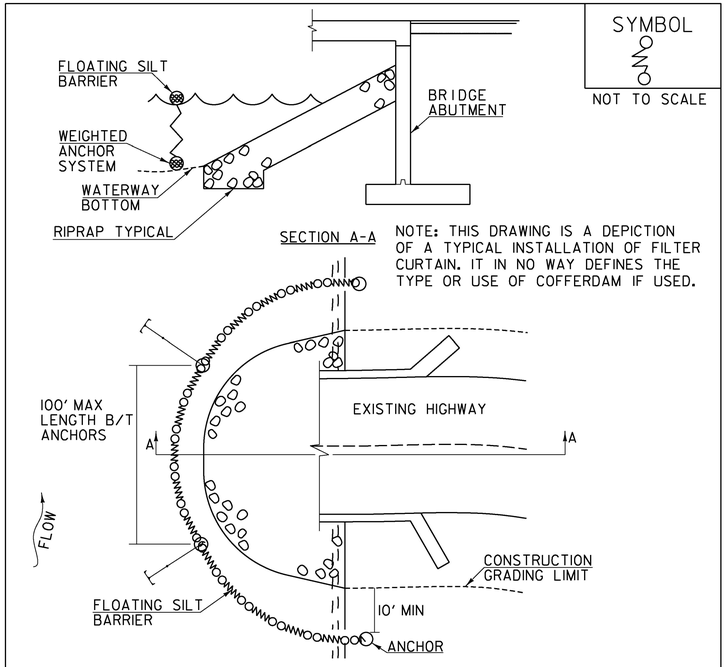

SYMBOL

NOT TO SCALE

CONSTRUCTION SPECIFICATIONS

1. FILTER CURTAIN SHALL NOT BE PLACED ACROSS A FLOWING WATERWAY, OR IN A WATERWAY WITH STREAM VELOCITIES GREATER THAN 1.5 FEET/SECOND.
2. MAXIMUM 100' LENGTH BETWEEN ANCHORS.
3. LAST SECTION SHALL TERMINATE A MINIMUM OF 10' BEYOND LIMIT OF DISTURBANCE.
4. THE WEIGHTED ANCHOR SYSTEM SHALL BE A TYPE WHICH ALLOWS THE CURTAIN TO CONFORM TO THE BOTTOM OF THE WATERWAY.
5. THE CURTAIN SHALL BE REMOVED BY SLOWLY PULLING TOWARD THE SHORE MINIMIZING THE ESCAPE OF SEDIMENTS INTO WATERWAY.

FILTER CURTAIN

THIS WORK SHALL BE PERFORMED IN ACCORDANCE WITH SECTION 649 FOR GEOTEXTILE FOR FILTER CURTAIN (PAY ITEM 649.61).

REVISIONS	
APRIL 1, 2008	WHF
JANUARY 13, 2009	WHF
SEPTEMBER 4, 2009	WHF

PROJECT NAME: ST JOHNSBURY
PROJECT NUMBER: BRO 1447(30)

FILE NAME: z12j164ero_dets.dgn
PROJECT LEADER: M. CHENETTE
DESIGNED BY: VAOT
EPSC DETAILS 1

PLOT DATE: 9/30/2016
DRAWN BY: VAOT
CHECKED BY: VAOT
SHEET 49 OF 76

VAOT URBAN LAWN MIX						
	LBS/AC					
WEIGHT	BROADCAST	HYDROSEED	NAME	LATIN NAME	GERM	PURITY
42.5%	34	68	CREEPING RED FESCUE	FESTUCA RUBRA X RUBRA	85%	98%
20.0%	16	32	PERENNIAL RYE GRASS	LOLIUM PERENNE	90%	95%
32.5%	26	52	KENTUCKY BLUE GRASS	POA PRATENSIS	85%	85%
5.0%	4	8	ANNUAL RYE GRASS	LOLIUM MULTIFLORUM	85%	95%
100%	80	160				

GENERAL AMENDMENT GUIDANCE		
FERTILIZER	LIME	
10/20/10	AG LIME	PELLITIZED
500 LBS/AC	2 TONS/AC	1 TONS/AC

CONSTRUCTION GUIDANCE

1. SEED MIX: THE URBAN AREA MIX SHALL NOT BE USED IN WETLANDS OR ANY WATERS OF THE STATE OF VERMONT.
2. SEED MIX: USE ONLY AS INDICATED IN THE PLANS.
3. SEED MIX: SHALL NOT HAVE A WEED CONTENT EXCEEDING 0.40% BY WEIGHT AND SHALL BE FREE OF ALL NOXIOUS SEED.
4. FERTILIZER AND LIMESTONE: SHALL FOLLOW RATES SHOWN ON PLAN OR AS DIRECTED BY THE ENGINEER
5. HAY MULCH: TO BE PLACED ON EARTH SLOPES AT THE RATE OF 2 TONS/ACRE, ACHIEVE 90% GROUND COVER OR AS DIRECTED BY THE ENGINEER.
6. HYDROSEEDING: ALTHOUGH GUIDANCE IS GIVEN ABOVE THE SITE CONDITIONS AND THE TYPE OF HYDROSEED WILL ULTIMATELY DICTATE THE AMOUNTS AND TYPES OF SOIL AMENDMENTS TO BE APPLIED
7. TURF ESTABLISHMENT: PLACING SEED, FERTILIZER, LIME AND MULCH PRIOR TO SEPTEMBER 15 AND AFTER APRIL 15 CAN BETTER ENSURE A VIGOROUS GROWTH OF GRASS.

ADAPTED FROM VTRANS TECHNICAL LANDSCAPE MANUAL FOR ROADWAYS AND TRANSPORTATION FACILITIES	TURF ESTABLISHMENT
THIS WORK SHALL BE PERFORMED IN ACCORDANCE WITH SECTION 651 FOR SEED (PAY ITEM 651.15)	

REVISIONS		
JANUARY 22, 2015	WHF	

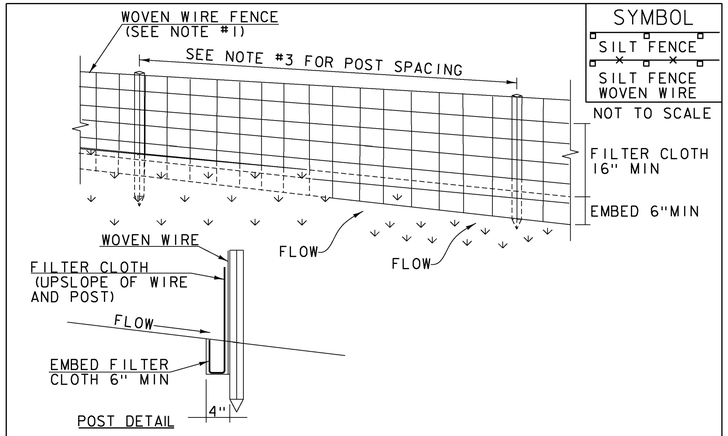

CONSTRUCTION SPECIFICATIONS

1. WOVEN WIRE REINFORCED FENCE IS REQUIRED WITHIN 100' UPSLOPE OF RECEIVING WATERS WHEN THE PROJECT FALLS UNDER A CONSTRUCTION STORMWATER PERMIT. WOVEN WIRE SHALL BE A MIN. 14 GAUGE WITH A 6" MAX. MESH OPENING.
2. FILTER CLOTH SHALL BE EITHER FILTER X, MIRAFI100X, STABILINKA T140N OR APPROVED EQUIVALENT.
3. POST SPACING FOR WIRE-BACKED FENCE SHALL BE 10' MAXIMUM. FOR FILTER-CLOTH FENCE, WHEN ELONGATION IS >50%, POST SPACING SHALL NOT EXCEED 4' AND WHEN ELONGATION IS <50%, POST SPACING SHALL NOT EXCEED 6'.
4. WOVEN WIRE FENCE IS TO BE FASTENED SECURELY TO FENCE POSTS WITH WIRE TIES. FILTER CLOTH IS TO BE FASTENED SECURELY TO WOVEN WIRE FENCE WITH TIES SPACED EVERY 24" AT TOP AND MID SECTION.
5. WHEN TWO SECTIONS OF FILTER CLOTH ADJOIN EACH OTHER THEY SHALL BE OVER-LAPPED BY 6" AND FOLDED.
6. MAINTENANCE SHALL BE PERFORMED AS NEEDED AND MATERIAL REMOVED WHEN SEDIMENT REACHES HALF OF FABRIC HEIGHT.

ADAPTED FROM DETAILS PROVIDED BY: NEW YORK STATE DEC ORIGINALLY DEVELOPED BY USDA-NRCS VERMONT DEPARTMENT OF ENVIRONMENTAL CONSERVATION	SILT FENCE
NOTES: REFER TO "THE VERMONT STANDARDS & SPECIFICATIONS FOR EROSION PREVENTION & SEDIMENT CONTROL -2006- " FROM THE VT AGENCY OF NATURAL RESOURCES FOR ADDITIONAL GUIDANCE. THIS WORK SHALL BE PERFORMED IN ACCORDANCE WITH SECTION 649 AND AS SHOWN IN THE PLANS FOR ~~GEOTEXTILE FOR SILT FENCE (PAY ITEM 649.51) OR GEOTEXTILE FOR~~ SILT FENCE, WOVEN WIRE REINFORCED (PAY ITEM 649.515).	

REVISIONS		
MARCH 21, 2008	WHF	
DECEMBER 11, 2008	WHF	
JANUARY 13, 2009	WHF	

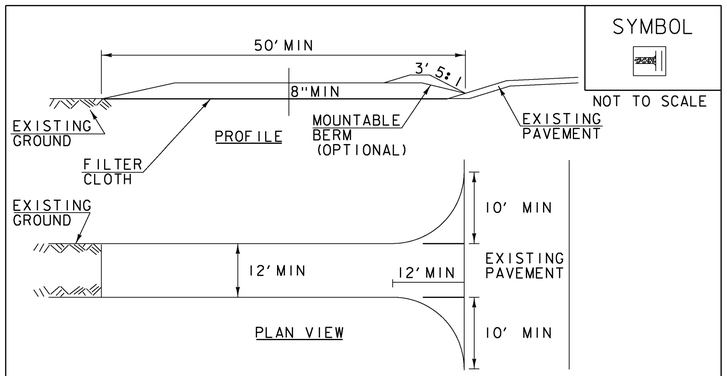

CONSTRUCTION SPECIFICATIONS

1. STONE SIZE- USE 1-4" STONE, RECLAIMED OR RECYCLED CONCRETE EQUIVALENT.
2. LENGTH- NOT LESS THAN 50' (EXCEPT ON A SINGLE RESIDENCE LOT WHERE A 30' MINIMUM LENGTH APPLIES).
3. THICKNESS- NOT LESS THAN 8".
4. WIDTH- 12' MINIMUM, BUT NOT LESS THAN THE FULL WIDTH AT POINTS WHERE INGRESS OR EGRESS OCCURS. 24' IF SINGLE ENTRANCE TO SITE.
5. GEOTEXTILE MUST BE PLACED OVER THE ENTIRE AREA PRIOR TO PLACING STONE.
6. SURFACE WATER- ALL SURFACE WATER FLOWING OR DIVERTED TOWARD CONSTRUCTION ENTRANCES SHALL BE PIPED BENEATH THE ENTRANCE. IF PIPING IS IMPRACTICAL, A MOUNTABLE BERM WITH 5:1 SLOPES WILL BE PERMITTED.
7. MAINTENANCE- THE ENTRANCE SHALL BE MAINTAINED IN A CONDITION WHICH WILL PREVENT TRACKING OR FLOWING OF SEDIMENT ONTO PUBLIC RIGHTS-OF-WAY, ALL SEDIMENT SPILLED, DROPPED, WASHED OR TRACKED ONTO PUBLIC RIGHTS-OF-WAY MUST BE REMOVED IMMEDIATELY.
8. WHEN WASHING IS REQUIRED, IT SHALL BE DONE ON AN AREA STABILIZED WITH STONE AND WHICH DRAINS INTO AN APPROVED SEDIMENT TRAPPING DEVICE.
9. PERIODIC INSPECTION AND NEEDED MAINTENANCE SHALL BE PROVIDED ACCORDING TO PERMIT REQUIREMENTS.

ADAPTED FROM DETAILS PROVIDED BY: NEW YORK STATE DEC ORIGINALLY DEVELOPED BY USDA-NRCS VERMONT DEPARTMENT OF ENVIRONMENTAL CONSERVATION	STABILIZED CONSTRUCTION ENTRANCE
NOTES: REFER TO "THE VERMONT STANDARDS & SPECIFICATIONS FOR EROSION PREVENTION & SEDIMENT CONTROL -2006- " FROM THE VT AGENCY OF NATURAL RESOURCES FOR ADDITIONAL GUIDANCE. THIS WORK SHALL BE PERFORMED IN ACCORDANCE WITH SECTION 653 FOR VEHICLE TRACKING PAD (PAY ITEM 653.35) OR AS SPECIFIED IN THE CONTRACT.	

REVISIONS		
MARCH 24, 2008	WHF	
JANUARY 13, 2009	WHF	

PROJECT NAME: ST JOHNSBURY
PROJECT NUMBER: BRO 1447(30)

FILE NAME: z12j164ero_dets.dgn
PROJECT LEADER: M. CHENETTE
DESIGNED BY: VAOT
EPSC DETAILS 2

PLOT DATE: 9/30/2016
DRAWN BY: VAOT
CHECKED BY: VAOT
SHEET 50 OF 76

SYMBOL

NOT TO SCALE

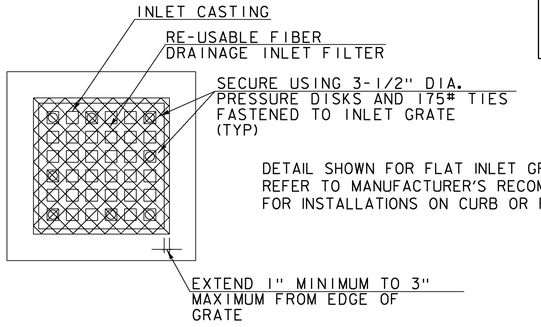

DETAIL SHOWN FOR FLAT INLET GRATES ONLY. REFER TO MANUFACTURER'S RECOMMENDATIONS FOR INSTALLATIONS ON CURB OR ROUND INLETS.

CONSTRUCTION SPECIFICATIONS

1. FILTERS SHALL RETAIN ALL CONSTRUCTION DEBRIS AND SHALL RETAIN OR OTHERWISE CONTROL MOST OF THE SEDIMENT PRODUCED BY CONSTRUCTION OPERATIONS.
2. IF CLOGGING OCCURS, INLETS SHALL BE ABLE TO BE EASILY UNCLOGGED BY BROOMING THE SIDES AND TOP OF THE FILTER.
3. INSTALLED FILTERS SHALL BE RESISTANT TO TRAFFIC DAMAGE, INCLUDING TRAFFIC BY STREET CLEANING MACHINES.
4. FILTER UNITS SHALL BE BIODEGRADABLE AND MAY OFTEN BE RE-USED.
5. INSTALL FILTER UNIT IN ACCORDANCE WITH MANUFACTURER'S RECOMMENDATIONS.
6. MINIMUM NUMBER OF ANCHORS PER FILTER UNIT: 7 FOR CURB INLETS, 8 FOR FLAT GRATES.
7. INSPECT ALL INSTALLED FILTER UNITS AFTER EVERY RAIN.
8. INSPECT ALL INSTALLED FILTER UNITS PRIOR TO INITIATING CONSTRUCTION ACTIVITIES FOR THE DAY IF RAIN PERSISTS OVERNIGHT.
9. IF, UPON VISUAL INSPECTION, 50% OR MORE OF FILTER FABRIC SURFACE AREA IS INUNDATED WITH SEDIMENT OR FILTER FABRIC IS CLOGGED, CONTRACTOR SHALL BROOM COLLECTED MATERIAL OFF FILTER UNIT SURFACES AND AWAY FROM EDGES.
10. REMOVE SEDIMENT AND DEBRIS COLLECTED AROUND FILTER UNITS. DISPOSE OF COLLECTED SEDIMENT AND DEBRIS AT AN APPROVED SITE WHERE IT WILL NOT BE SUBJECT TO EROSION.

INLET PROTECTION DEVICE, FILTER FIBER

NOTES:
THIS WORK SHALL BE PERFORMED IN ACCORDANCE WITH SECTION 653 FOR PAY ITEM 653.41 INLET PROTECTION DEVICE, TYPE II.

SYMBOL

NOT TO SCALE

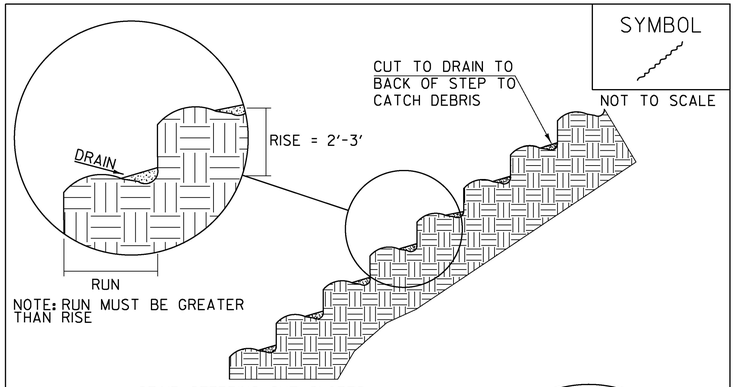

NOTE: RUN MUST BE GREATER THAN RISE

STAIR STEPPING CUT SLOPES

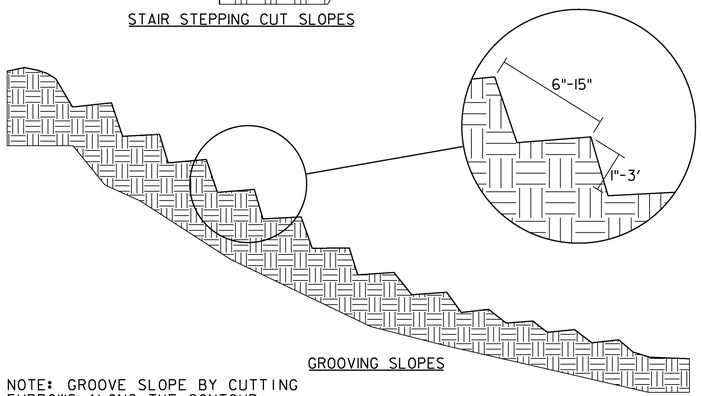

GROOVING SLOPES

NOTE: GROOVE SLOPE BY CUTTING FURROWS ALONG THE CONTOUR. IRREGULARITIES IN THE SOIL SURFACE CATCH RAINWATER AND RETAIN LIME, FERTILIZER AND SEED.

ADAPTED FROM DETAILS PROVIDED BY: NEW YORK STATE DEC
ORIGINALLY DEVELOPED BY USDA-NRCS
VERMONT DEPARTMENT OF ENVIRONMENTAL CONSERVATION

SURFACE ROUGHENING

NOTES:
REFER TO "THE VERMONT STANDARDS & SPECIFICATIONS FOR EROSION PREVENTION & SEDIMENT CONTROL -2006- " FROM THE VT AGENCY OF NATURAL RESOURCES FOR ADDITIONAL GUIDANCE.

THIS WORK WILL BE CONSIDERED INCIDENTAL TO THE CONTRACT

REVISIONS	
APRIL 1, 2008	WHF
JANUARY 13, 2009	WHF

PROJECT NAME: ST JOHNSBURY
PROJECT NUMBER: BRO 1447(30)

FILE NAME: z12j164ero_dets.dgn
PROJECT LEADER: M. CHENETTE
DESIGNED BY: VAOT
EPSC DETAILS 3

PLOT DATE: 9/30/2016
DRAWN BY: VAOT
CHECKED BY: VAOT
SHEET 51 OF 76

IMPACTS BELOW ORDINARY HIGH WATER

TEMPORARY IMPACTS BELOW OHW:	370 SF
PERMANENT IMPACTS BELOW OHW:	581 SF
TOTAL IMPACTS:	951 SF

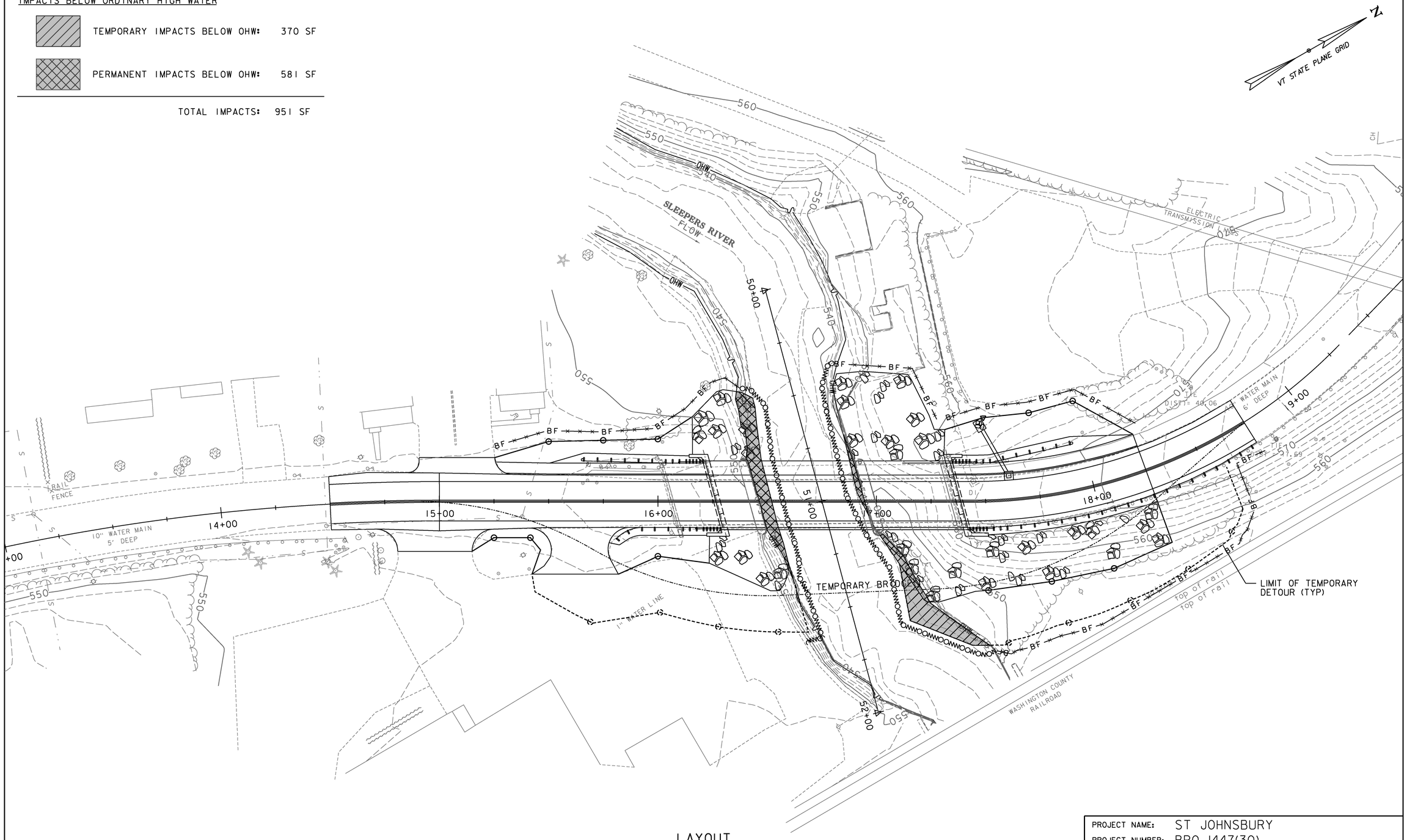

= STONE FILL, TYPE III

LAYOUT

0 20 40

SCALE: 1" = 20'-0"

Stantec

PROJECT NAME:	ST JOHNSBURY
PROJECT NUMBER:	BRO 1447(30)
FILE NAME: z12j164bdr.dgn	PLOT DATE: 9/30/2016
PROJECT LEADER: M. CHENETTE	DRAWN BY: I. MAYNARD
DESIGNED BY: I. MAYNARD	CHECKED BY: M. CHENETTE
IMPACTS PLAN	SHEET 52 OF 76

NOTE: PAYMENT FOR TEMPORARY BLOWOFF ASSEMBLY WILL BE CONSIDERED INCIDENTAL TO ITEM 629.42, TRANSFER TO NEW SYSTEM, WATER SYSTEM

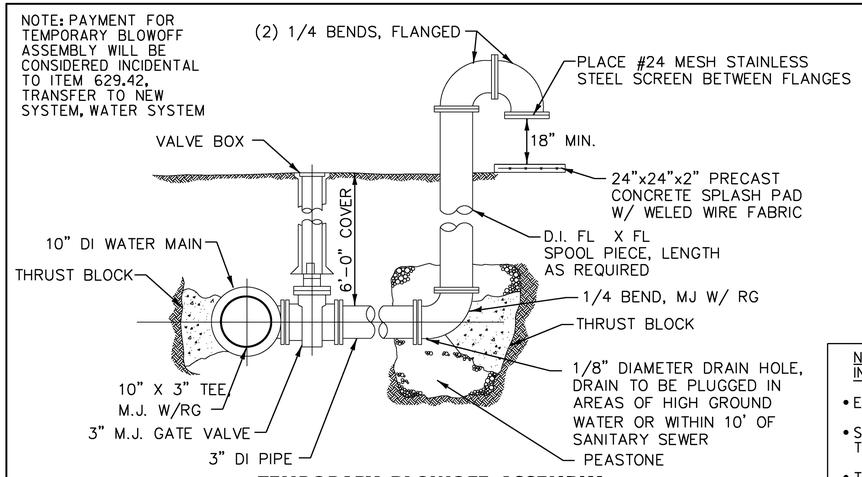

TEMPORARY BLOWOFF ASSEMBLY

NOT TO SCALE

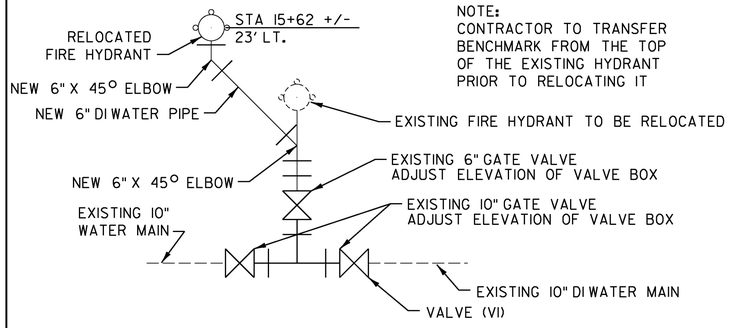

NOTE:
CONTRACTOR TO TRANSFER BENCHMARK FROM THE TOP OF THE EXISTING HYDRANT PRIOR TO RELOCATING IT

DETAIL 1

NOT TO SCALE
SEE UTILITY PLAN FOR LOCATION

NOTE: PAY ITEM 629.42, TRANSFER TO NEW SYSTEM, WATER SYSTEM, INCLUDES, BUT IS NOT LIMITED TO, THE FOLLOWING:

- EXCAVATION FOR INSTALLATION OF TEMPORARY WATER MAIN.
- SAWCUTTING OF PAVEMENT AS REQUIRED FOR INSTALLATION OF TEMPORARY WATER MAIN.
- TEMPORARY BURIED DUCTILE IRON PIPE AND FITTINGS.
- TEMPORARY DUCTILE IRON PIPE AND FITTINGS INSTALLED UNDER TEMPORARY BRIDGE (INCLUDING PIPE SUPPORTS)
- TEMPORARY DUCTILE IRON PIPE AND FITTINGS REQUIRING PREINSULATED URETHANE INSULATION.
- TEMPORARY VALVES.
- TEMPORARY BLOW-OFF ASSEMBLY.
- TEMPORARY CHLORINATION INJECTION POINT.
- POLYSTYRENE INSULATION FOR TEMPORARY WATER MAIN.
- CONCRETE THRUST RESTRAINT FOR TEMPORARY WATER MAIN AND APPURTENANCES.
- ALL BACKFILL FOR TEMPORARY WATER MAIN INCLUDING CRUSHED GRAVEL PIPE BEDDING AND BLANKET, AND COMMON FILL (EXCLUDES SUBBASE OF DENSE GRADED CRUSHED STONE, AND BITUMINOUS CONCRETE PAVEMENT).
- FLUSHING, TESTIING AND DISINFECTION OF TEMPORARY WATER MAIN.
- REMOVAL OF EXISTING 10" DI WATER MAIN AND APPURTENANCES.
- REMOVAL OF ABANDONED 8" WATER MAIN AND APPURTENANCES.
- REMOVAL OF TEMPORARY 10" WATER MAIN AND APPURTENANCES.

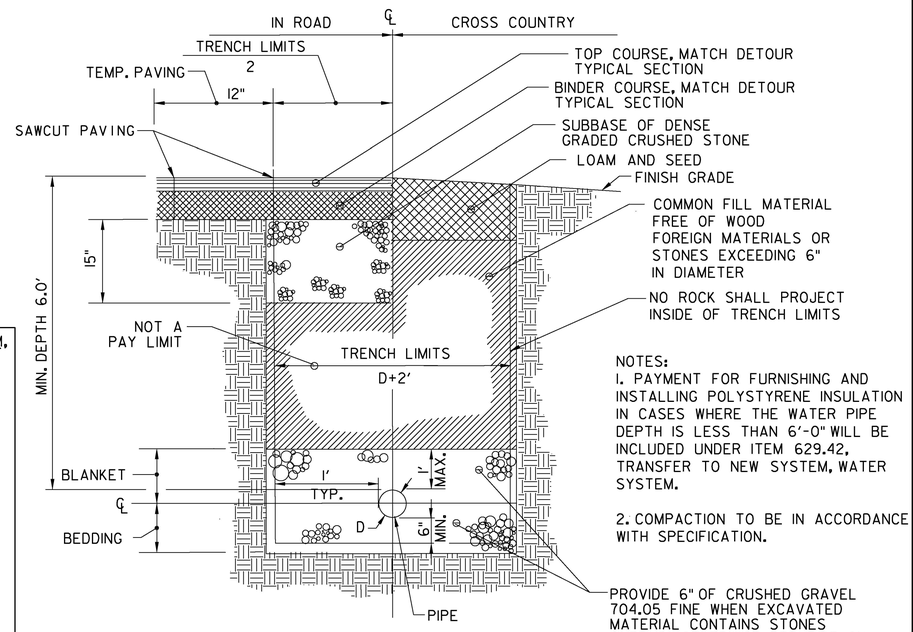

NOTES:
1. PAYMENT FOR FURNISHING AND INSTALLING POLYSTYRENE INSULATION IN CASES WHERE THE WATER PIPE DEPTH IS LESS THAN 6'-0" WILL BE INCLUDED UNDER ITEM 629.42, TRANSFER TO NEW SYSTEM, WATER SYSTEM.

2. COMPACTION TO BE IN ACCORDANCE WITH SPECIFICATION.

TYPICAL TEMPORARY DI TRENCH DETAIL

NOT TO SCALE

NOTE:
PAYMENT FOR TEMPORARY DUCTILE IRON WATER PIPE WILL BE INCLUDED UNDER ITEM 629.42, TRANSFER TO NEW SYSTEM, WATER SYSTEM.

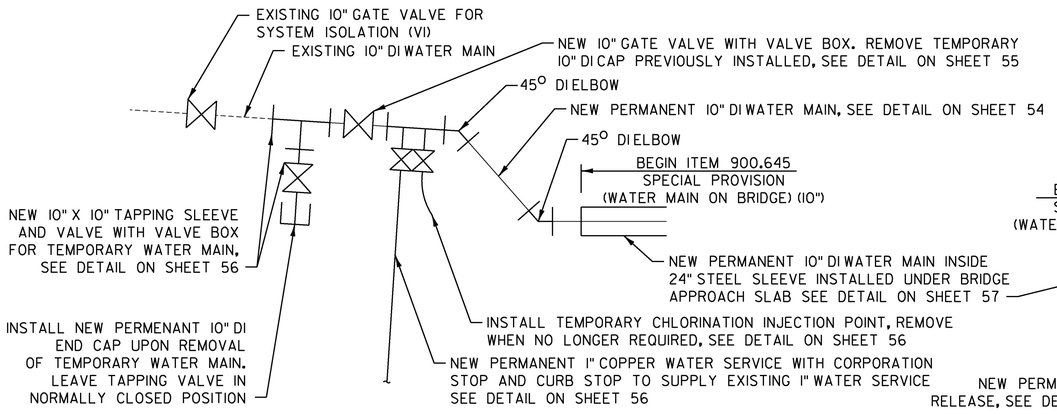

DETAIL 2

NOT TO SCALE
SEE UTILITY PLAN FOR LOCATION

NOTE: EXTEND 3" PRE-INSULATION ALONG 10" DI WATER MAIN BEYOND THE STEEL SLEEVE AT EACH END AND UNTIL THE PIPE REACHES THE POINT WHERE THERE IS 6'-0" MINIMUM COVER OVER THE PIPE. PAYMENT FOR 3" PRE-INSULATION WILL BE CONSIDERED INCIDENTAL TO ITEM 900.645, SPECIAL PROVISION, (WATER MAIN ON BRIDGE) (10").

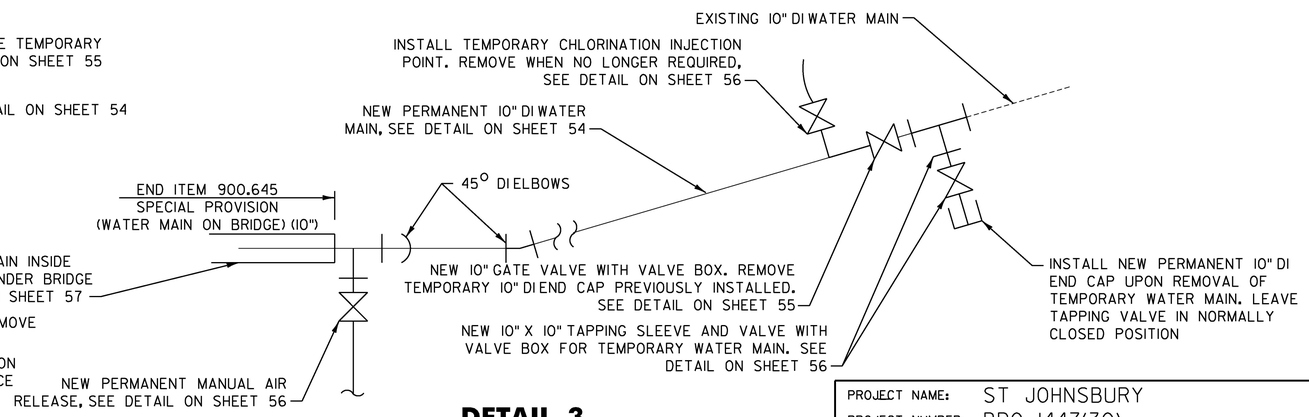

DETAIL 3

NOT TO SCALE
SEE UTILITY PLAN FOR LOCATION

Stantec

PROJECT NAME:	ST JOHNSBURY
PROJECT NUMBER:	BRO 1447(30)
FILE NAME: z12J164wtr_dets2d.dgn	PLOT DATE: 9/30/2016
PROJECT LEADER: M. CHENETTE	DRAWN BY: D. HARRINGTON
DESIGNED BY: D. CAMPBELL	CHECKED BY: G. SANTY
WATER DETAILS I	SHEET 53 OF 76

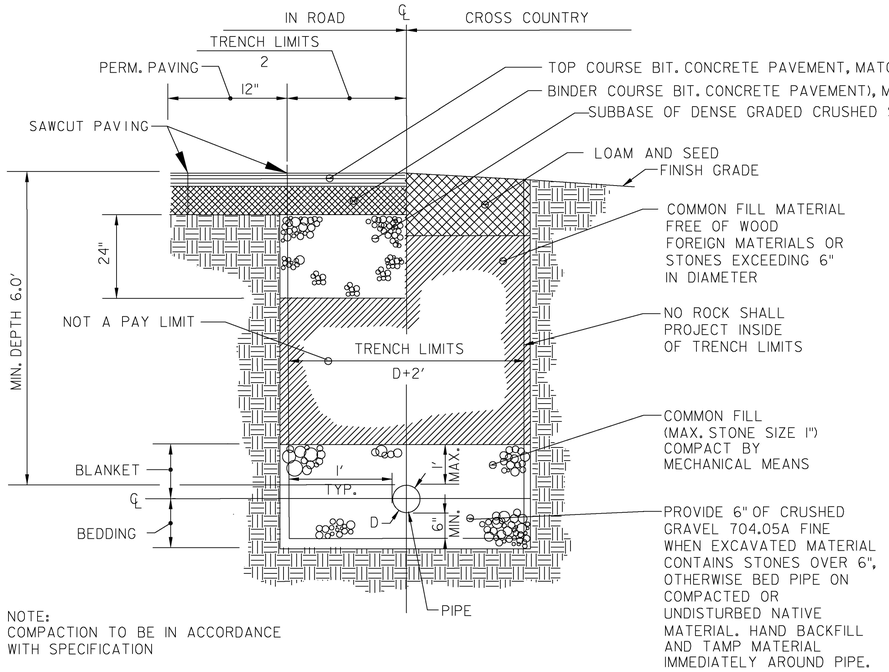

NOTE:
COMPACTION TO BE IN ACCORDANCE WITH SPECIFICATION

NOTES:

1. PAYMENT FOR SAWCUTTING OF PAVEMENT WILL BE CONSIDERED INCIDENTAL TO ITEM 900.640 SPECIAL PROVISION (DUCTILE IRON PIPE, CEMENT-LINED, ALL INCLUSIVE).
2. PAYMENT FOR FURNISHING AND INSTALLING POLYSTYRENE INSULATION IN CASES WHERE THE WATER PIPE DEPTH IS LESS THAN 6'-0" IN DEPTH WILL BE CONSIDERED INCIDENTAL TO ITEM 900.640 SPECIAL PROVISION (DUCTILE IRON PIPE, CEMENT-LINED, ALL INCLUSIVE).
3. PAYMENT FOR PERMANENT DUCTILE IRON WATER PIPE WILL BE MADE UNDER ITEM 900.640. SPECIAL PROVISION (DUCTILE IRON PIPE, CEMENT LINED, ALL INCLUSIVE).

TYPICAL PERMANENT DUCTILE IRON TRENCH DETAIL

NOT TO SCALE

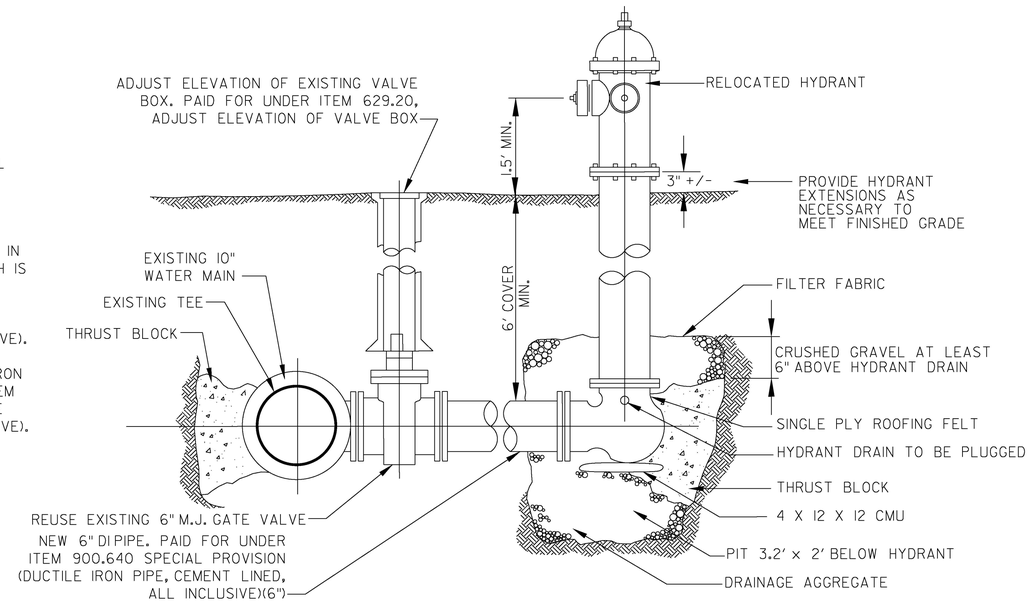

RELOCATED HYDRANT ASSEMBLY DETAIL

NOT TO SCALE

PAYMENT FOR RELOCATING THE EXISTING FIRE HYDRANT WILL BE MADE UNDER ITEM 629.29, RELOCATE HYDRANT.

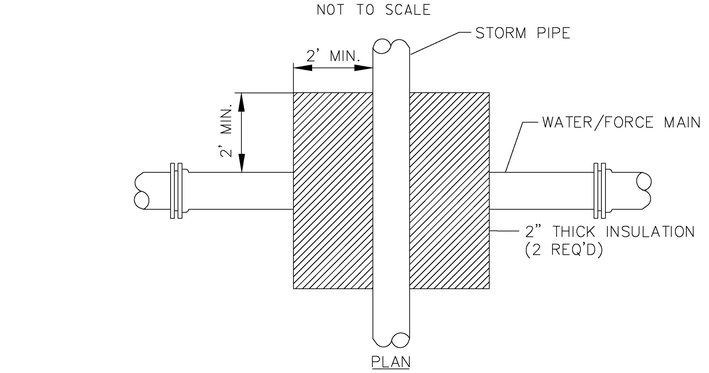

SECTION

STORM SEWER CROSSING INSULATION DETAIL

NOT TO SCALE

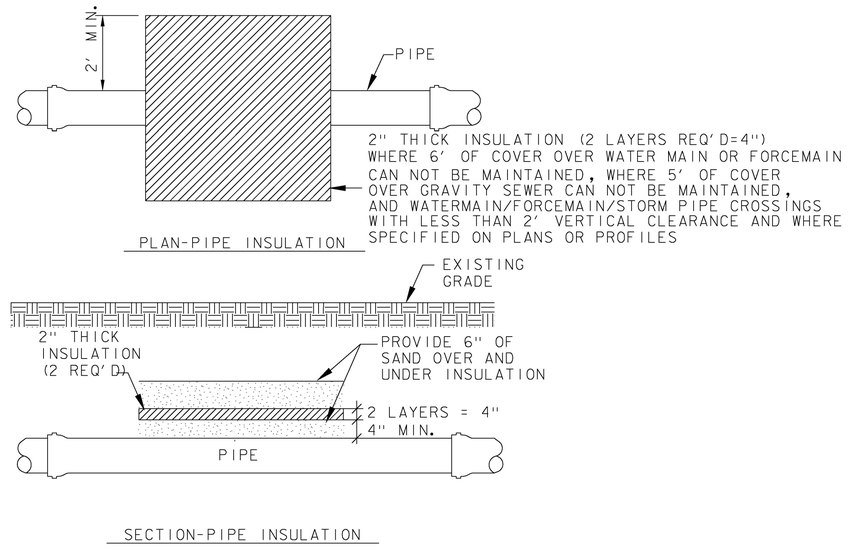

SECTION-PIPE INSULATION

RIGID BOARD INSULATION

NOT TO SCALE

PAYMENT FOR POLYSTYRENE RIGID BOARD INSULATION AND SAND BEDDING WILL BE CONSIDERED INCIDENTAL TO ITEM 900.640, SPECIAL PROVISION (DUCTILE IRON PIPE, CEMENT LINED, ALL INCLUSIVE)

Stantec

PROJECT NAME:	ST JOHNSBURY
PROJECT NUMBER:	BRO 1447(30)
FILE NAME: z12j164wtr_dets2d.dgn	PLOT DATE: 9/30/2016
PROJECT LEADER: M. CHENETTE	DRAWN BY: D. HARRINGTON
DESIGNED BY: D. CAMPBELL	CHECKED BY: G. SANTY
WATER DETAILS 2	SHEET 54 OF 76

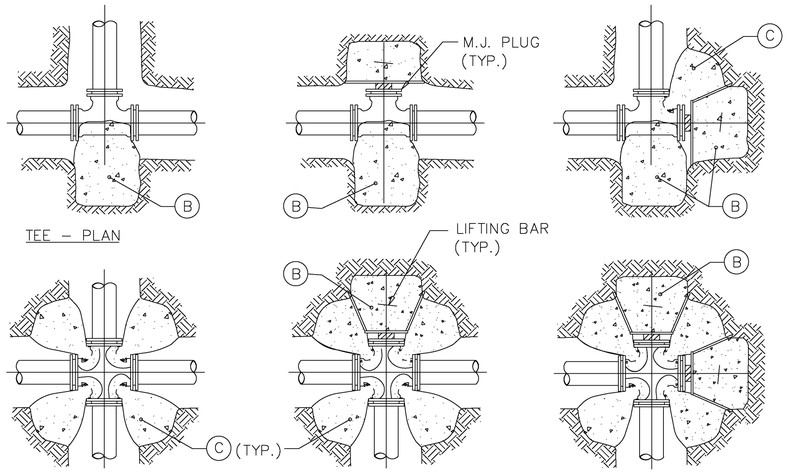

THRUST BLOCK DETAILS

NOT TO SCALE

THRUST BLOCK SCHEDULE SQUARE FEET OF CONCRETE THRUST BLOCKING BEARING ON UNDISTURBED MATERIAL			
REACTION TYPE		PIPE SIZE	
		6"	12"
TEST PRESSURE = 100 PSIG	Ⓐ	2.19	8.62
	Ⓑ	1.55	6.09
	Ⓒ	1.19	4.66
	Ⓓ	0.60	2.37
	Ⓔ	0.30	1.19
OTHER TEST PRESSURES FOR THE ABOVE REACTIONS	SQUARE FEET OF CONCRETE THRUST BLOCKING FOR OTHER TEST PRESSURES IS DIRECTLY PROPORTIONAL TO THE ABOVE TABLE. FOR INSTANCE, AT 200 PSI TEST PRESSURE FOR ABOVE NUMBERS DOUBLE.		

NOTES:

1. THRUST BLOCKS SHALL BE CONSTRUCTED WITH CLASS B CONCRETE. POUR THRUST BLOCKS AGAINST UNDISTURBED MATERIAL. WHERE TRENCH WALL HAS BEEN DISTURBED, EXCAVATE LOOSE MATERIAL AND EXTEND THRUST BLOCK TO UNDISTURBED MATERIAL. NO JOINTS SHALL BE COVERED WITH CONCRETE.

2. ON BENDS AND TEES, EXTEND THRUST BLOCKS FULL LENGTH OF FITTING.

3. PLACE CONCRETE PATIO BLOCKS IN FRONT OF ALL PLUGS BEFORE POURING THRUST BLOCK.

4. REQUIREMENTS OF THE ABOVE TABLE PRESUME MINIMUM SOIL BEARING OF 1 TON PER SQUARE FOOT, AND MAY BE VARIED BY THE ENGINEER TO MEET OTHER CONDITIONS ENCOUNTERED.

5. RETAINER GLANDS ARE REQUIRED FOR ALL MECHANICAL JOINTS. THESE GLANDS DO NOT REDUCE THE REQUIREMENTS FOR THRUST RESTRAINT.

6. ALL FITTINGS SHALL BE WRAPPED IN POLYETHYLENE OR BUILDING PAPER PRIOR TO INSTALLATION OF CONCRETE RESTRAINT.

7. THREADED ROD SHALL BE ANSI A242 FY50 PIPE RESTRAINT NUTS TO MATCH AWWA C111. THREADED RODS AND NUTS TO BE FIELD COATED WITH BITUMINOUS PAINT.

8. THRUST RESTRAINT IS REQUIRED FOR ALL TEES, BENDS, REDUCERS, CAPS, PLUGS, OR CROSSES.

9. INSTALL LIFT HOOKS INTO THRUST BLOCKS AT END CAPS AND PLUGS.

10. PAYMENT FOR ALL THRUST RESTRAINT FOR PIPE OR VALVES, AS APPROPRIATE, WILL BE CONSIDERED INCIDENTAL TO THE RESPECTIVE CONTRACT BID ITEM.

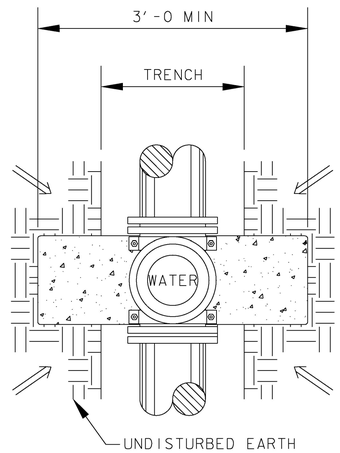

AREA OF BEARING ON UNDISTURBED EARTH (ARROWS) SHALL BE THE SAME AS FOR 1/4 BEND THRUST BLOCK. SEE THRUST BLOCK SIZING DETAIL, THIS DRAWING.

PLAN

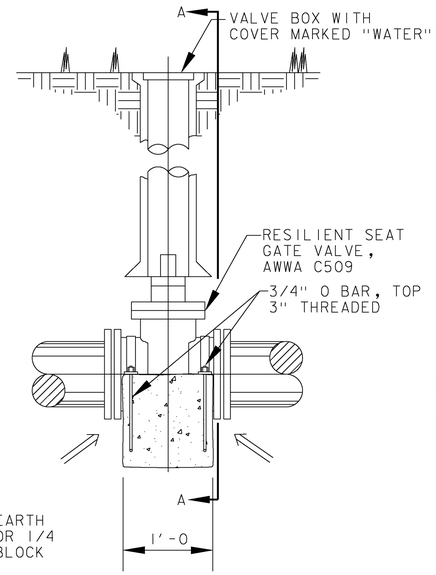

ELEVATION

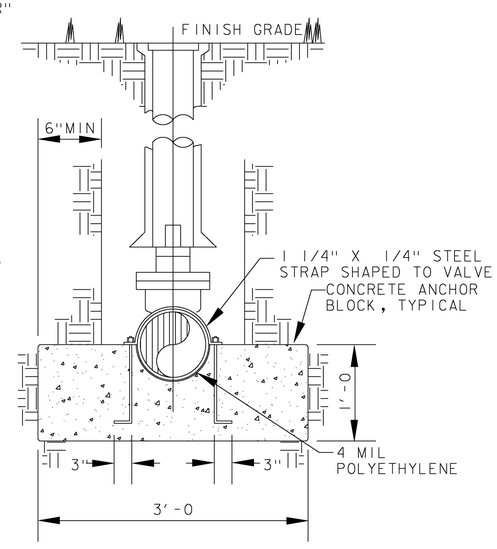

SECTION A–A

PAYMENT FOR VALVE ANCHORS WILL BE CONSIDERED INCIDENTAL TO ITEM 900.620, SPECIAL PROVISION (GATE VALVE WITH VALVE BOX, ALL INCLUSIVE) (10")

VALVE ANCHOR DETAILS

NOT TO SCALE

Stantec

PROJECT NAME: ST JOHNSBURY
PROJECT NUMBER: BRO 1447(30)

FILE NAME: z12j164wtr_dets2d.dgn
PROJECT LEADER: M. CHENETTE
DESIGNED BY: D. CAMPBELL
WATER DETAILS 3

PLOT DATE: 9/30/2016
DRAWN BY: D. HARRINGTON
CHECKED BY: G. SANTY
SHEET 55 OF 76

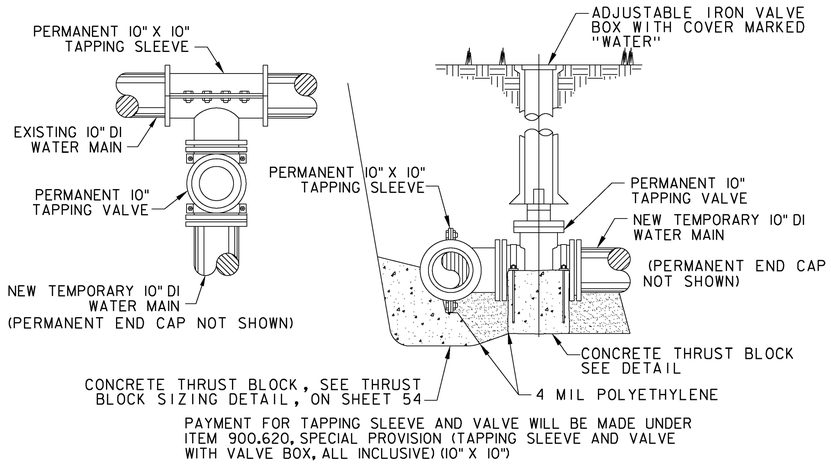

PAYMENT FOR TAPPING SLEEVE AND VALVE WILL BE MADE UNDER ITEM 900.620, SPECIAL PROVISION (TAPPING SLEEVE AND VALVE WITH VALVE BOX, ALL INCLUSIVE) (10" X 10")

TAPPING SLEEVE AND VALVE

NOT TO SCALE

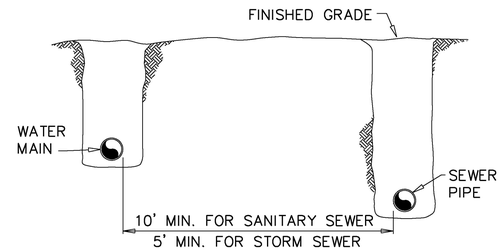

SEWER-WATER PARALLEL INSTALLATION

NOT TO SCALE

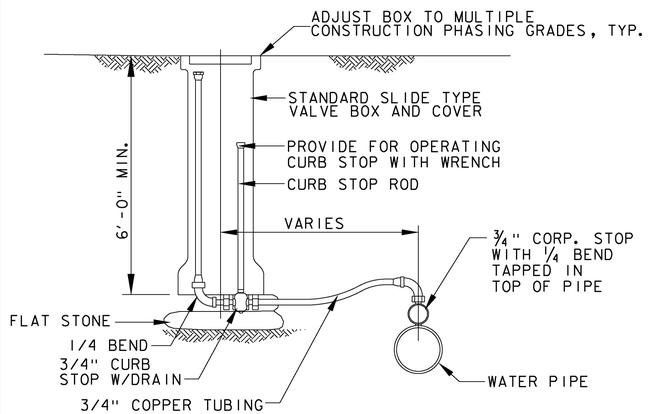

NOTES:
1. PAYMENT FOR PERMANENT MANUAL AIR RELEASE WILL BE MADE UNDER ITEM 900.620, SPECIAL PROVISION (MANUAL AIR RELEASE, ALL INCLUSIVE)

2. PAYMENT FOR TEMPORARY CHLORINATION INJECTION WILL BE CONSIDERED INCIDENTAL TO ITEM 629.42, TRANSFER TO NEW SYSTEM, WATER SYSTEM

TYPICAL INSTALLATION FOR PERMANENT MANUAL AIR RELEASE AND TEMPORARY CHLORINATION INJECTION

NOT TO SCALE

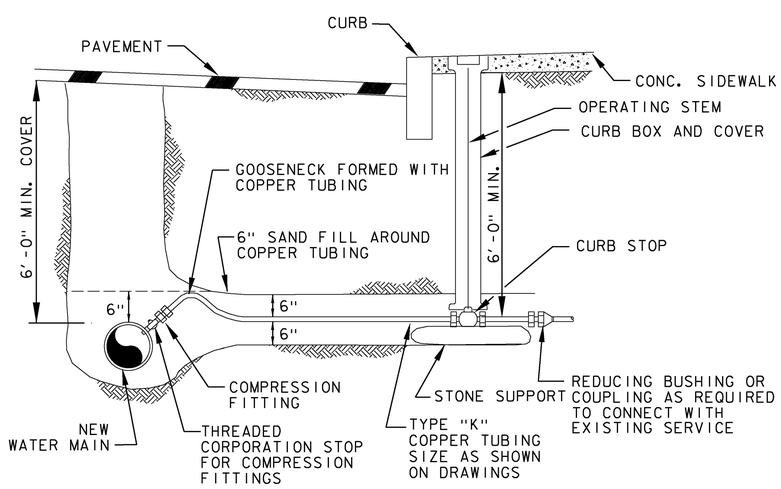

NOTES:
1. PAYMENT FOR EXTENSION SERVICE BOX AND CURB STOP WILL BE MADE UNDER ITEM 900.620 SPECIAL PROVISION (EXTENSION SERVICE BOX AND CURB STOP, ALL INCLUSIVE) (1")

2. PAYMENT FOR CORPORATION STOP WILL BE MADE UNDER ITEM 900.620 SPECIAL PROVISION (CORPORATION STOP, ALL INCLUSIVE) (1")

3. PAYMENT FOR SEAMLESS COPPER TUBING WILL BE MADE UNDER ITEM 900.640 SPECIAL PROVISION (SEAMLESS COPPER WATER TUBE, ALL INCLUSIVE) (1")

TYPICAL WATER SERVICE CONNECTION

NOT TO SCALE

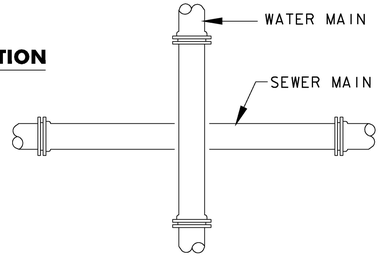

PLAN VIEW

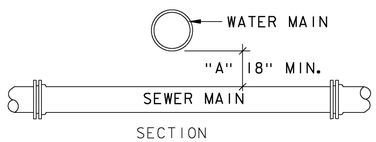

SECTION

CONSTRUCTION RESTRICTIONS

1. IN ALL NEW CONSTRUCTION, DIMENSION "A" SHALL NEVER BE LESS THAN 18 INCHES FOR WATERLINE AND SANITARY SEWER CROSSING, AND NEVER LESS THAN 18 INCHES FOR WATERLINE AND STORM DRAIN CROSSING.

2. WITH ALL NEW CONSTRUCTION, THE CROSSING SHALL BE ARRANGED AS SHOWN IN THE DIAGRAM, SO THAT THE SEWER OR STORM JOINTS WILL BE EQUIDISTANT AND AS FAR AS POSSIBLE FROM THE WATER MAIN JOINTS.

3. IF THE WATER MAIN MUST PASS BENEATH THE SEWER OR STORM DRAIN IN NEW CONSTRUCTION, THEN ADEQUATE STRUCTURAL SUPPORT SHALL BE PROVIDED FOR THE SEWER OR STORM. THE FIRST SEWER PIPE JOINT ON EACH SIDE OF THE WATER MAIN SHALL BE CONCRETE ENCASED.

WATER AND SEWER CROSSING

NOT TO SCALE

Stantec

PROJECT NAME:	ST JOHNSBURY
PROJECT NUMBER:	BRO 1447(30)
FILE NAME: z12j164wtr_detS2d.dgn	PLOT DATE: 9/30/2016
PROJECT LEADER: M. CHENETTE	DRAWN BY: D. HARRINGTON
DESIGNED BY: D. CAMPBELL	CHECKED BY: G. SANTY
WATER DETAILS 4	SHEET 56 OF 76

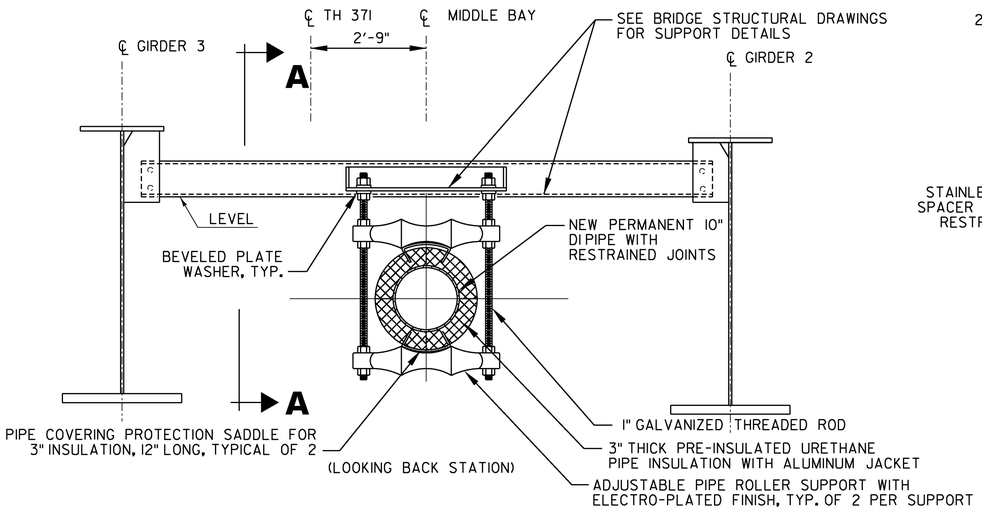

NOTES:
1. ALL STRUCTURAL STEEL FOR UTILITY SUPPORTS SHALL CONFORM TO AASHTO M270M/M270 GRADE 50W. ALL STRUCTURAL STEEL AND FASTENERS SHALL BE HOT-DIP GALVANIZED IN ACCORDANCE WITH AASHTO M 111 AND M 232.

2. ALL PIPE FITTINGS, RESTRAINED JOINTS, AND EXPANSION JOINTS WILL BE INSTALLED WITH 3" THICK PRE-INSULATED URETHANE PIPE INSULATION WITH ALUMINUM JACKET.

3. PAYMENT FOR NEW BRIDGE PIPE SUPPORTS INCLUDING PIPE AND INSULATION WILL BE MADE UNDER ITEM 900.645, SPECIAL PROVISION (WATER MAIN ON BRIDGE) (10")

BRIDGE PIPE SUPPORT DETAIL

NOT TO SCALE

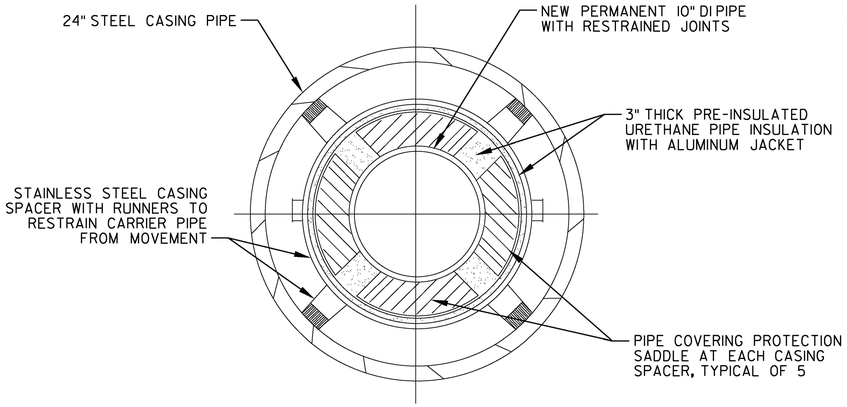

NOTES:

1. INFORMATION ON THIS SHEET SHOULD ONLY BE CONSTRUED TO REPRESENT WATER MAIN AND APPURTENANCES. OTHER INFORMATION SHOWING STRUCTURAL ITEMS, IS SHOWN ONLY FOR RELATIVE RELATIONSHIPS ONLY. THIS INFORMATION SHOULD BE OBTAINED FROM OTHER DRAWINGS.

2. DUCTILE IRON PIPE FOR BRIDGE CROSSING SHALL BE ANSI/AWWA C151/A21.51, CLASS 52, CEMENT LINED WITH SEAL COATING INSIDE AND OUTSIDE. PIPE SHALL BE RESTRAINED JOINT PIPE. JOINTS SHALL BE LAYED OUT TO AVOID HANGER LOCATIONS WITH PIPE LENGTHS MODIFIED, IF NECESSARY.

NOTES:

1. INSTALL 3 STAINLESS STEEL SPACERS INSIDE STEEL CASING PIPE PER LENGTH OF DUCTILE IRON PIPE AT BOTH ENDS OF BRIDGE.

2. PAYMENT FOR STEEL CASING PIPE INCLUDING DI WATER PIPE AND INSULATION WILL BE MADE UNDER ITEM 900.645, SPECIAL PROVISION (WATER MAIN ON BRIDGE) (10")

SECTION B–B: STEEL SLEEVE THROUGH BRIDGE ABUTMENT AND UNDER APPROACH SLAB

NOT TO SCALE

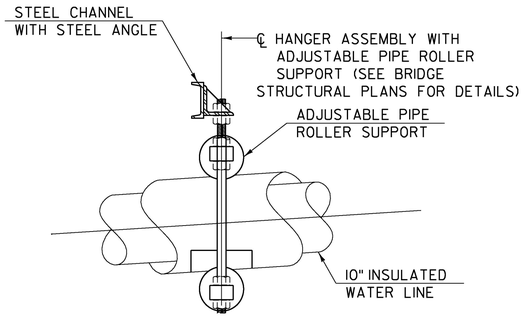

SECTION A–A

NOT TO SCALE

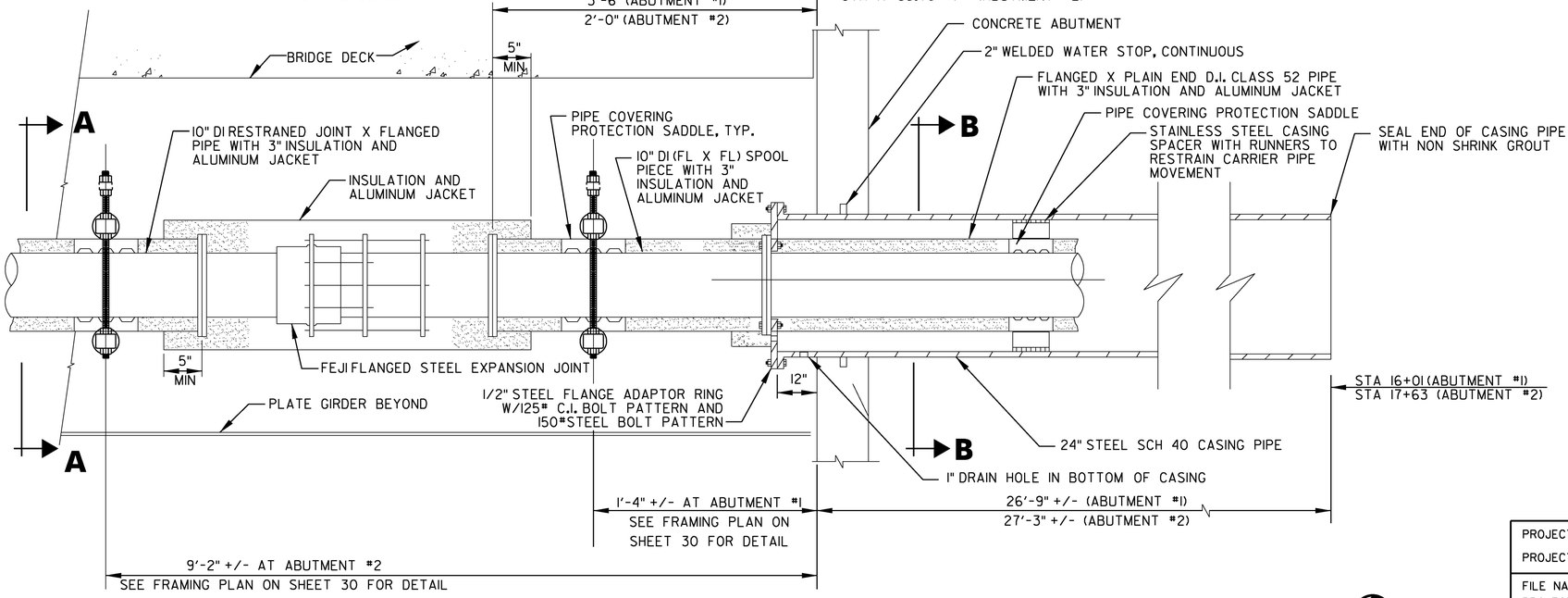

EXPANSION JOINT AND SUPPORT DETAIL

NOT TO SCALE TYPICAL BOTH ENDS OF BRIDGE

Stantec

PROJECT NAME:	ST JOHNSBURY
PROJECT NUMBER:	BRO 1447(30)
FILE NAME: z12j164wtr_dets2d.dgn	PLOT DATE: 9/30/2016
PROJECT LEADER: M. CHENETTE	DRAWN BY: D. HARRINGTON
DESIGNED BY: D. CAMPBELL	CHECKED BY: G. SANTY
WATER DETAILS 5	SHEET 57 OF 76

STATE OF VERMONT
AGENCY OF TRANSPORTATION

RIGHT - OF - WAY DETAIL SHEET

TABLE OF PROPERTY ACQUISITION

PARCEL NO.	PROPERTY OWNER	ROW LAYOUT NO.	BEGINNING STATION	ENDING STATION	TAKE	REMAINDER	RIGHT			RECORDING DATA					REMARKS
					AREA±	AREA±	TYPE	T / P	AREA ±	TITLE TAKEN	DATE	TOWN / CITY	BOOK	PAGE	
1	RHTL PARTNERS, LLC	1	13+85.86 RT	16+44.3 RT			DISCONNECT & CONNECT	T							WATER & SEWER WHERE APPLICABLE
			13+85.86 RT	16+44.3 RT			UTILITY	T							DISCONNECT & RECONNECT ELEC. &
															COMMUNICATION LINES WHERE APPLICABLE
			15+03.1 RT	15+33.1 RT			DRIVE	T	95 SF						34' PAVED
			15+41.0 RT				INSTALL	T							TEMPORARY TRAFFIC SIGNAL
			15+42.4 RT	16+01 RT			ACCESS	T	801 SF						30', PAVED, TEMP. ACCESS TO DETOUR;
															INCL. TEMP. SIGNAGE AND TRAFFIC BARRIER
			15+42.4 RT	15+81.9 RT			DRIVE	T	304 SF						39.5' PAVED
			15+46.0 RT	16+64.7 RT			DETOUR	T	2397 SF						ONE WAY TRAFFIC, INCL. TEMP. TRAFFIC BARRIERS, TEMP.
															BRIDGE, TEMP. SIDEWALK, & EC
			15+77.58 RT	16+23.53 RT			SLOPE	P	148 SF						
			15+84.4 RT	16+53.0 RT			INSTALL	T							TEMP. 10" DUCTILE IRON WATER MAIN LINE
			16+23.47 RT	16+54.44 RT			CHANNEL	P	236 SF						INCL. STONE FILL & TEMP. EC
			16+33.0 RT	16+68.0 RT			INSTALL	T							PDF
2	MENARD, RICHARD D. & CARMEN A.;	1	15+07.6 LT	16+40.90 LT			DISCONNECT & CONNECT	T							WATER & SEWER WHERE APPLICABLE
	DONOVAN, SEAN M.		15+07.6 LT	16+40.90 LT			UTILITY	T							DISCONNECT & RECONNECT ELEC. & COMMUNICATION
															LINES WHERE APPLICABLE
			15+08.0 LT												DRIVE 34.5', PAVED
			15+23.8 LT	15+48.3 LT			INSTALL	T							PDF
			15+30.77 LT	16+40.31 LT			UTILITY	P	1956 SF						AERIAL
			15+41.30 LT	16+15.84 LT			SLOPE	P	308 SF						INCL. EC
			15+48.3 LT	16+36.2 LT			CONSTRUCTION	T	446 SF						INCL. PDF & EC
			15+92.0 LT	15+95.7 LT			INSTALL	T							TEMP. GUY WIRE & ANCHOR
			16+15.73 LT	16+40.90 LT			CHANNEL	P	563 SF						INCL. STONE FILL & TEMP. EC
3	STATE OF VERMONT LESSOR	1	16+44.34 RT	16+63.44 RT			CHANNEL	P	190 SF						INCL. STONE FILL & TEMP. EC
	WASHINGTON COUNTY RAILROAD		16+53.0 RT	17+90.0 RT			INSTALL	T							TEMP 10" DUCTILE IRON WATER MAIN LINE
	COMPANY, LESSEE		17+07.91 RT	18+25.00 RT			CHANNEL	P	1975 SF						INCL. STONE FILL
			17+23.68 RT	18+57.2 RT			DETOUR	T	2794 SF						ONE WAY TRAFFIC, INCL. TEMP. TRAFFIC BARRIERS, TEMP.
															BRIDGE, TEMP. SIDEWALK, EC & PDF
			17+50.0 RT	18+62.0 RT			CONSTRUCTION	T	565 SF						INCL. PDF & TEMP. EC
4	GREEN MOUNTAIN POWER														
	CORPORATION	1	13+85.86 RT	18+62.0 RT											UTILITY
5	TELEPHONE OPERATING COMPANY	1	13+85.86 RT	18+62.0 RT											UTILITY
	OF VERMONT LLC														
															UTILITY
6	CHARTER COMMUNICATIONS	1	13+85.86 RT	18+62.0 RT											
7	SOVERNET FIBER CORPORATION	1	13+85.86 RT	18+62.0 RT											UTILITY
NOTE:	TOWN OF ST. JOHNSBURY	1	13+85.86 RT	18+62.0 RT											FIRE ALARM CABLE

TABLE OF REVISIONS

REVISION NO.	ROW SET SHEET #	DESCRIPTION	DATE

APPROVED: RYAN CLOUTIER DATE: 07-28-2015
CHIEF, PLANS & TITLES

PROJECT NAME: **ST. JOHNSBURY**
PROJECT NUMBER: **BRO 1447(30)**

FILE NAME: **z12j164rowdetailsheet**
PROJECT LEADER: **MIKE CHENETTE**
DESIGNED BY: **H. PETROVS**
R.O.W. DETAIL SHEET #1

PLOT DATE: 2/18/2016
DRAWN BY: **L. BUXTON**
CHECKED BY: **M. CHENETTE**
SHEET **58** OF **76**

BRIDGE RAILING, GALVANIZED STEEL TUBING/CONCRETE COMBINATION
STA. 16+21 TO 17+34, LT
STA. 16+30 TO 17+42, RT

VERTICAL GRANITE CURB
STA. 15+30 TO 16+27, LT
STA. 17+18 TO 18+25, LT

PORTLAND CEMENT CONCRETE SIDEWALK, 5 INCH
STA. 15+26 TO 16+27, LT
STA. 17+16 TO 18+25, LT

STEEL BEAM GUARDRAIL, GALVANIZED
STA. 15+65.5 TO 16+03.0, LT
STA. 15+80.3 TO 16+12.0, RT
STA. 17+52.0 TO 17+89.5, LT
STA. 17+60.0 TO 18+75.0, RT (CONNECT TO EXISTING)

ANCHOR FOR STEEL BEAM RAIL
STA. 15+65.5, LT
STA. 15+80.3, RT
STA. 17+89.5, LT

REMOVAL AND DISPOSAL OF GUARDRAIL
STA. 15+71 TO 16+01, LT
STA. 17+32 TO 17+62, LT
STA. 17+40 TO 18+25, RT

SIDEWALK - SPECIAL PROVISION (HIGH PERFORMANCE CONCRETE, LIGHTWEIGHT)
STA. 16+27 TO 17+16, LT

CONSTRUCT DRIVE
STA. 14+98, RT (34' PAVED)
STA. 15+08, LT (34.5' PAVED)
STA. 15+66, RT (39.5' PAVED

GUARDRAIL APPROACH SECTION, CONC COMB BRIDGE RAILING TL-3
STA. 16+03 TO 16+21, LT
STA. 15+94 TO 16+12, RT
STA. 17+34 TO 17+52, LT
STA. 17+42 TO 17+60, RT

PLAN REFERENCES
- U041-4(2) (1972) - ROUTE 5 HIGHWAY PROJECT
- FR 15G (1929) - FORMER RT 5 (MAIN ST.) REALIGNMENT HIGHWAY PROJECT
- PLAN FOR ST JOHNSBURY (1989) - PUMP STATION - BY DUSSAULT SURVEYING, MAY 1989
- ROW & TRACK MAP FOR THE ST JOHNSBURY & LAKE CHAMPLAIN R.R. CO. VAL SHEET V/50/1
- ROW & TRACK MAP FOR THE BOSTON & MAINE R.R. VAL SHEET V43/61

VT STATE PLANE GRID

CURVE 1 DATA
PC = STA 11+51.42
Δ = 20°55' 01"
D = 5°59' 58"
R = 955.00'
T = 176.28'
L = 348.64'
E = 16.13'

CURVE 2 DATA
Δ = 45°57' 00"
D = 24°22' 52"
R = 235.00'
T = 99.63'
L = 188.47'
E = 20.25'

END ROW PROJECT
ST. JOHNSBURY BRO 1447(30)
STA. 18+62.0 23.61' RT

BEGIN ROW PROJECT
ST. JOHNSBURY BRO 1447(30)
STA. 13+85.86 24.75' RT

REPORT OF DOING & ORDER ALTERING TOWN HWY #371, DATED 6/24/2013

2
MENARD, RICHARD D. & CARMEN A. ; DONOVAN, SEAN M.

N/F SPICER

1
RHTL PARTNERS, LLC

3
STATE OF VERMONT and WASHINGTON COUNTY RAILROAD COMPANY

TOWN OF ST. JOHNSBURY

STATE OF VERMONT

LAMOILLE VALLEY RAIL TRAIL

SLEEPERS RIVER FLOW

BEGIN APPROACH STA. 14+50.00

BEGIN PROJECT STA. 15+50.00

END APPROACH STA. 18+75.00

END PROJECT STA. 19+93.58

BEGIN BRIDGE STA. 16+26.49 F.G. EL. 559.40 ℄ BRG. ABUT. 1 STA. 16+27.00 = F.G. EL. 559.43

END BRIDGE STA. 17+38.51 F.G. EL. 566.02

℄ BRG. ABUT. 2 STA. 17+38.00 = F.G. EL. 565.99

RAILROAD BRIDGE NO. 539

MAINLINE STATION 16+75.00 =CHANNEL STATION 51+00.00 Δ = 75° 0' 0" RT

N 696154.27 E 1766183.72 15+05.05 24.75' LT
N 696030.08 E 1766177.33 13+85.86 24.75' RT
N 696359.82 E 1766301.36 17+36.88 24.75' LT
N 696335.23 E 1766344.32 17+36.88 24.75' RT
N 696533.73 E 1766322.12 19+37.31 24.75' LT
N 696547.52 E 1766369.66 19+37.31 24.75' RT

EXISTING R.O.W. L = 357.65' R = 979.68'
EXISTING R.O.W. L = 228.35' R = 930.18'
EXISTING R.O.W. R = 273.86'
EXISTING R.O.W. R = 224.36'
EXISTING R.O.W. L = 179.93'
EXISTING R.O.W.
EXISTING RAILROAD R.O.W.
EXISTING RAILROAD R.O.W.

TOWN HWY EASEMENT 49.50'
T.H. #371
SOUTH MAIN STREET
MAILBOX CLUSTER
TOWN OF ST. JOHNSBURY PUMP STATION EASEMENT AREA
FORMER SITE OF GAS TANK
TEMP. SIDEWALK
TEMPORARY WATER MAIN
DETOUR(T)
CONST(T)
ACCESS(T)
INSTALL(T)
D & C (T)
UE(T)
UE(P)
CONST(T)
SR(P)
DRIVE(T)
CH(P)
WILLOW
GARDEN
PORCH
GRAVEL DRIVE
PAVED DRIVE
PAVED PARKING LOT
BUILDING
STONE FILL, TYPE III
CPEP (ES) INVERT = 561.50
18" X 20' CPEP (SL)
STA. 17+61.00, 11.0' LT. PRECAST DI GRATE E.G. = 567.00 INVERT OUT = 562.00
I. PIPE (DISTURBED)
I. PIPE
EXISTING R.O.W.
NEWPORT & RICHFORD R.R. CO., ET AL. TO WASHINGTON COUNTY R.R. CO., FREIGHT RAILROAD OPERATION EASEMENT
BK. 276/PG. 265
BK. 276/PG. 270 NEWPORT & RICHFORD RAILROAD CO., ET AL. TO STATE OF VERMONT
TEMPORARY DETOUR (TYP) REMOVED BY OTHERS

LINES SHOWN ON THIS PLAN AS EXISTING PROPERTY LINES (P/L) ARE BELIEVED TO BE ACCURATE BUT SHOULD NOT BE RELIED UPON FOR PURPOSES UNRELATED TO THE TOWN OF ST JOHNSBURY ACQUISITION OF LAND AND RIGHTS FOR THIS PROJECT.

LAYOUT
0 20 40
SCALE: 1" = 20'-0"

Stantec

FOR R.O.W. USE ONLY

PROJECT NAME: ST JOHNSBURY
PROJECT NUMBER: BRO 1447(30)

FILE NAME: z12j164bdr_ROW.dgn
PROJECT LEADER: M. CHENETTE
DESIGNED BY: H. PETROVS
R.O.W. LAYOUT SHEET 1 OF 1
PLOT DATE: 2/18/2016
DRAWN BY: L. BUXTON
CHECKED BY: M. CHENETTE
SHEET 59 OF 76

FED. ROAD DIST. NO.	STATE	PROJ. NO.	FISCAL YEAR	SHEET NO.	TOTAL SHEETS
9	VT.	15-G	1929	1	97

INDEX OF SHEETS

SHEET NO. 1 TITLE PAGE
" " 2 TYPICAL CROSS-SECTION OF IMPROVEMENT } ONE COURSE CEMENT CONCRETE PAVEMENT - TYPE B
" " 3 DETAILS OF CONSTRUCTION
4-28 PLAN AND PROFILE SHEETS
29 STANDARD STRUCTURE SHEET - S-20 (PIPE CULVERTS)
30 " " " - S-21 (BOX ")
31 " " " - S-23 (GUARD RAIL, ETC)
32 " CULVERT SHEET - S.C.-1 (BOX CULVERTS - 5'X5' AND OVER)
BRIDGE STA. 84+02.7 - STA. 85+32.7 { 33 " BRIDGE SHEET - S.T.B-20 - 35 FEET; 34 " " " - S.T.B-20 - 50 FEET; 35 DETAILS OF BALUSTRADE RAIL & SIDEWALK; 36 " " " " " "; 37-38-39-40 SUBSTRUCTURE SHEETS; 41 SUBSTRUCTURE SHEET - S.B.-2; 42 & 42A " " - S.B.-2A & S.B.-3 (SKEW); 43 & 44 APPROACH SLAB DETAILS
BRIDGE STA 308+64 { 46 LAYOUT; 47 STANDARD BRIDGE SHEET - S.L.B.-20 - 14 FOOT SPAN - C.R.; 48 ABUTMENT EXTENSION - S.L.A.G. - H=10 FEET
49-97 CROSS SECTIONS

STATE OF VERMONT
STATE HIGHWAY DEPARTMENT

PLAN AND PROFILE OF PROPOSED STATE HIGHWAY

FLOOD RELIEF PROJECT

TOWNS OF ST. JOHNSBURY · WATERFORD · BARNET

ST. JOHNSBURY · WELLS RIVER ROAD

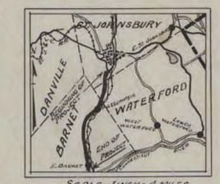

SCALE: 1 INCH = 4 MILES

FROM THE OVERPASS IN ST. JOHNSBURY VILLAGE
SOUTHERLY 6.723 MILES TO EAST BARNET VILLAGE.

LENGTH OF PROJECT INCLUDING BRIDGES OVER 20 FOOT SPAN = 35,499.5 FEET = 6.723 MILES
LENGTH OF PROJECT EXCLUDING BRIDGES OVER 20 FOOT SPAN = 35,322.5 FEET = 6.689 MILES

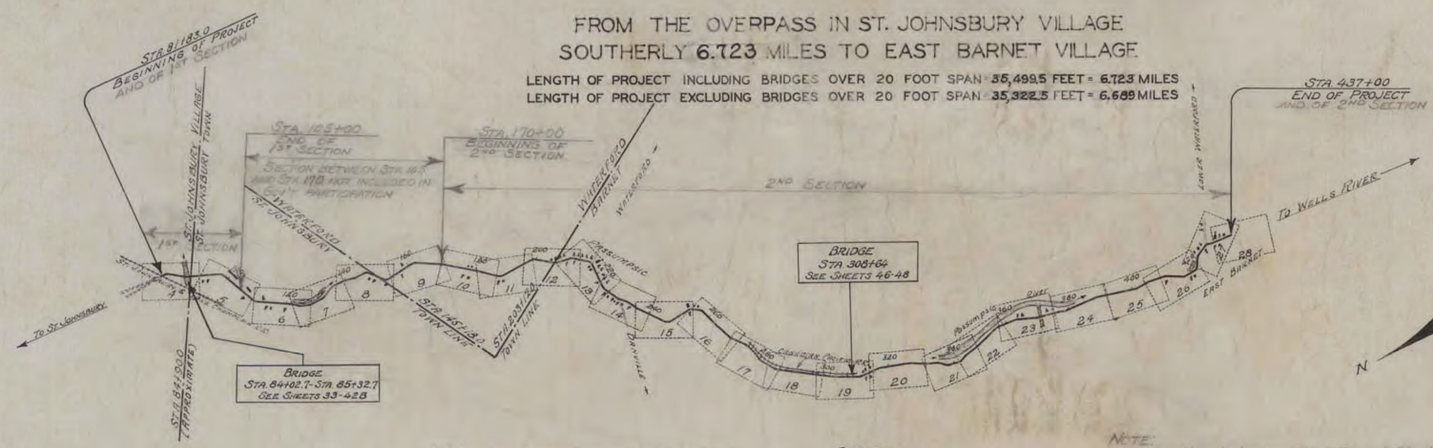

St. Johnsbury
BRO-1447(30)
Sheet 60 of 76
For Reference Only

CONVENTIONAL SIGNS

COUNTY LINE
TOWN LINE
FENCE LINE
STONE WALL
UNFENCED PROPERTY
GUARD RAIL
TRAVELED WAY
RAILROAD
RETAINING WALL
CENTER LINE (30 — PC. 30+85 +)
SURVEY LINE
CULVERT
DROP INLET
TROLLEY POLE
POWER POLE
TELEPHONE POLE
TREES
HEDGE

GROUND ELEVATION ..... DATUM 1929 LINE
GRADE ELEVATION ..... DATUM 1929 LINE

CURVE DATA

DEFLECTION ANGLE	Δ
DEGREE OF CURVE	D.
RADIUS OF CURVE	R.
TANGENT DISTANCE	T.
LENGTH OF CURVE	L.
EXTERNAL DISTANCE	E.
POINT OF INTERSECTION	P. I.
POINT OF CURVE	P. C.
POINT OF TANGENT	P. T.
POINT ON TANGENT	P.O.T.

Note: The General Layout of this Project contemplates the use of the Gravel Material obtained as excavation from Sheets 67A to be used from the beginning of the Project to approximately Sheet 16. This makes it possible to eliminate some base over this section as a paid item of Sub-base of Gravel and obtain an equivalent construction from Common Excavation.
Over the rest of the project the grade is kept 2" on 3' higher than the old road in order that acceptable Excavation or Borrow may be used instead of Sub-base of Gravel.

SCALES

LAYOUT	1" = 2000'
PLAN	1" = 50'
PROFILE	Hor 1" = 50' Vert 1" = 10'
CROSS SECTIONS	1" = 5'

NOTE: Section between Sta 105 and Sta 170 not included in Govt participation.

This Project to be constructed in accordance with Standard Specifications, on file with the U.S. Bureau of Public Roads, as approved July 7, 1926. These plans subject to such revisions as may be required by the Bureau of Public Roads or the Chief Engineer.

Attention of the Contractor is called to the following items that are modified from the General Specification requirements:
1. Drop Inlet Grates
2. Stone Fill
3. Corrug. Galv. Metal Pipes with Paved Inverts.

APPROVED: APRIL 20, 1929
H. E. Laurent
CHIEF ENGINEER

SUBMITTED BY ORDER OF THE STATE HIGHWAY BOARD
APRIL 20, 1929
A. F. Bailey
COMMISSIONER OF HIGHWAYS

RECOMMENDED [redacted]
DISTRICT ENGINEER BUREAU OF PUBLIC ROADS

RECOMMENDED FOR APPROVAL [redacted]
CHIEF ENGINEER BUREAU OF PUBLIC ROADS

APPROVED [redacted]
DIRECTOR - BUREAU OF PUBLIC ROADS

SERIES F.R. NO. 15-G FILED
SHEET 1 OF 97

IMPERIAL TRACING CLOTH EUGENE DIETZGEN CO., INC., N. Y.

CABLE GUARD RAIL REQUIRED

Stations	Lin. Ft. Left	Lin. Ft. Right
81+83-84+03	320	320
85+25-85+57	32	-
85+25-85+97	-	72
85+69-91+77	608	-

DROP INLETS REQUIRED (STANDARD)

Station	Conc. A	Steel	Grates	Vit. Tile Size	Vit. Tile Leng.
84+30 Rt.	1.4 cu yds	90#	1	12"	8Ft.
87+25 Rt.	1.4 " "	99#	1	"	"

DROP INLETS WITH MODIFIED GRATES REQUIRED

Station	Conc. A	Steel	Grates
90+30 Rt.	1.4 cy.	99#	1
92+20 Rt.	1.4 "	99#	1
92+90 Rt.	1.4 "	99#	1

CONC. RETAINING WALL REQUIRED

Stations	Leng.	Conc. Class B	Steel
85+90-86+45 Lt.	65 Ft.	59 cu yds.	114#

CONCRETE CURB & GUTTER REQUIRED

Stations	Side	Width	Leng.	Curb Height	Conc. A	Steel
90+25-94+00	Rt.	2.0 ft.	375 Ft.	Bin ches	25 C.Y.	338#
81+95-84+03	Rt.	2.0	205 Ft.	8 "	13.6 " "	185#
85+90-86+45	Lt.	2.0	55 Ft.	8 "	3.7 " "	50#

VIT. CLAY PIPE REQUIRED

Stations	Leng. Lin. Ft.	Size
87+25 Rt. to River	120	15"
87+25 Rt. to 90+30 Rt.	305	15"
90+30 Rt. to 94+00 Rt.	370	12"

APPROXIMATE TOWN & VILLAGE LINE ACCORDING TO CHARTER (H 242 - OF 1917 ---- Page 12 - Lines 225-243)

REV CURVE #2
Δ 21°06'
D 6°
R 955.0
T 177.9
L 351.7
E 16.6

Existing Catch Basins to be removed, and the tile sewer pipe sealed up in a manner satisfactory to the Engineer. The existing system of tile is not to be removed as it now serves as both surface and sanitary sewer and the new system to be built is to be a surface system only.

BRIDGE: STR. 84+02.7 - 85+32.7
Length over all = 130 Ft. See Sheets 32-42, 52A, 52B for Const. Details.

DROP INLET GRATES
Item 78 - MODIFIED

Section view of frame and grate to be used at Drop Inlets constructed in Curb and Gutter, STR. 90+30, 92+90, 93+45, 99+00. The same type of frame is to be used at STR. 87+50 Left and Right, excepting that two grates are to be used. Furnishing and installing of frame to be included in unit bid price for Drop Inlet Grates.

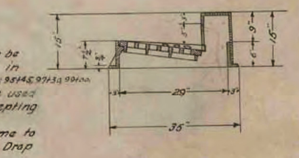

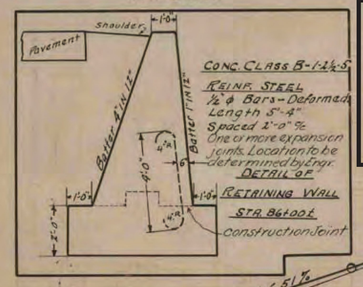

St. Johnsbury
BRO-1447(30)
Sheet 61 of 76
For Reference Only

B.M. #13 Point spot on dry bridge abutment, 32 ft. left of STA. 81+00. Elev. 577.08
B.M. #14 Spike in root of twin poplar 19 ft. right of STA 86+06. Elev. 553.33
B.M. #15 Spike in root of 24" maple, 24.5 ft. right of STA. 91+14. Elev. 569.16

SERIES FR 15-6
SHEET 4 OF 97

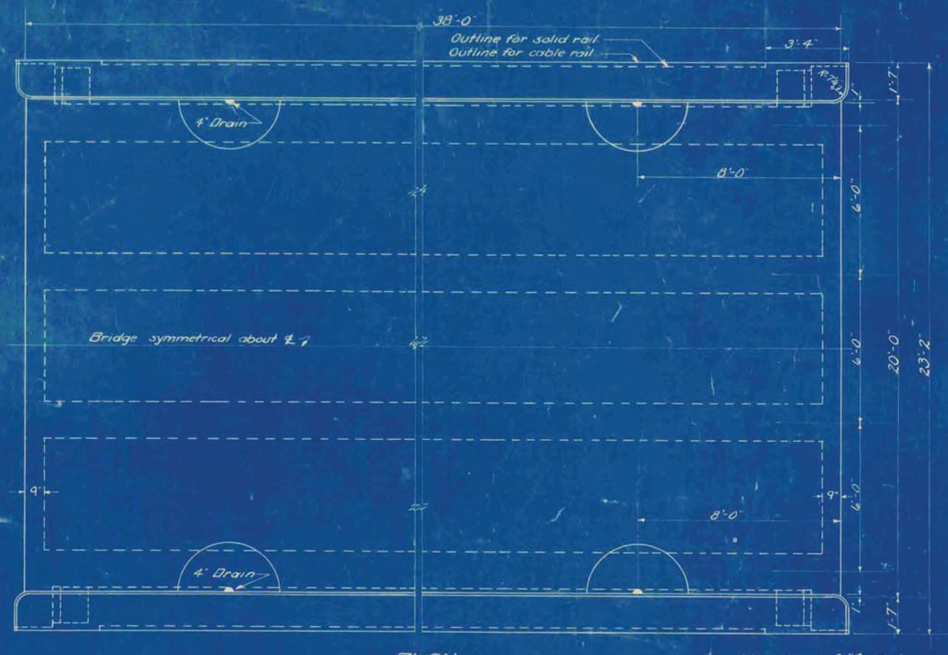

PLAN
Scale ⅛"=1'-0"

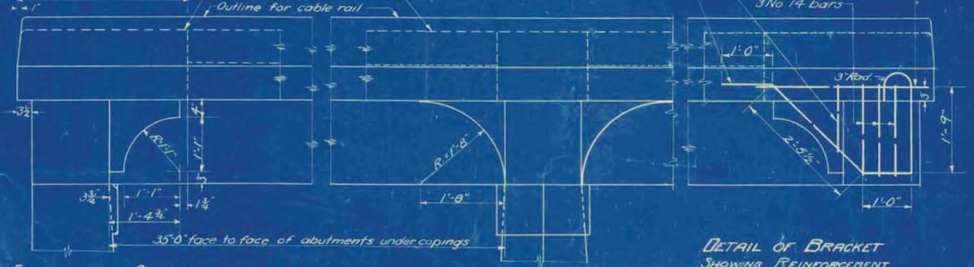

SIDE ELEVATION AT ABUTUTMENT

SIDE ELEVATION FOR MULTIPLE SPANS



DETAIL OF BRACKET SHOWING REINFORCEMENT

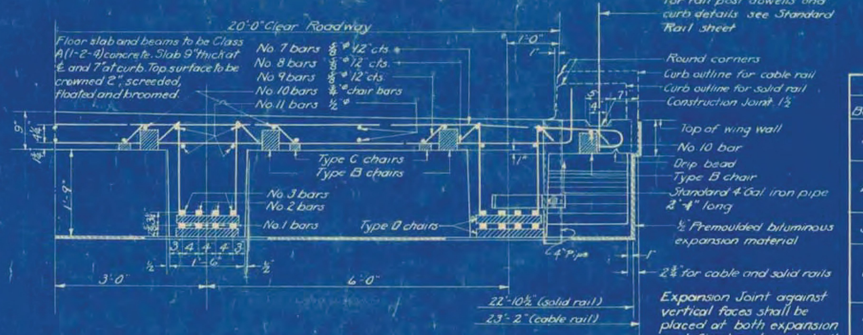

HALF SECTION THROUGH ROADWAY
Scale ⅜"=1'-0"

Expansion Joint against vertical faces shall be placed at both expansion and fixed ends and shall be left exposed.

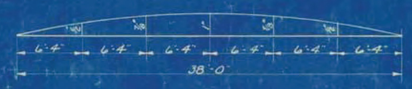

CAMBER DIAGRAM
Slab, curb and rail shall be cambered as shown

STEEL SCHEDULE

Bar	Size	Length	Detail
1	1¼" ø	40'-0"	36'-6"
2	1¼" ø	41'-3"	31'-10" / 36'-6"
3	1¼" ø	41'-3"	29'-10" / 36'-6"
6	½" ø	6'-6"	
7	⅝" ø	24'-0"	22'-0"
8	⅝" ø	23'-0"	20'-6"
9	⅝" ø	22'-6"	21'-4"
10	⅝" ø	19'-6"	19'-6"
11	⅝" ø	19'-6"	19'-6"
12	⅝" ø	22'-6"	22'-6"
13	⅛" ø	4'-0"	4'-0"
16	½" ø	2'-6"	2'-6"

Bar	Size	Length	A	B
14	⅝" ø	5'-0"	1'-0"	1'-9"
15	⅝" ø	3'-6"	1'-0"	1'-0"
17	½" ø	See detail below		

The correctness of this steel schedule is not guaranteed and no claim will be allowed on account of any inaccuracy therein.

All steel to be deformed bars. Reinforcing steel shall conform to the Standard Specifications for Billet Steel Concrete Reinforcement Bars, Structural or Intermediate Grade, of the American Society for Testing Materials, Serial Designation A15-14.

All bar detail dimensions refer to ℄ of steel.

All work and materials shall conform to the Standard Road and Bridge Specifications of the Vermont State Highway Department, 1926.

For typical details see sheet S.B. 2. Use details S202 S203, S204, S206, S207.

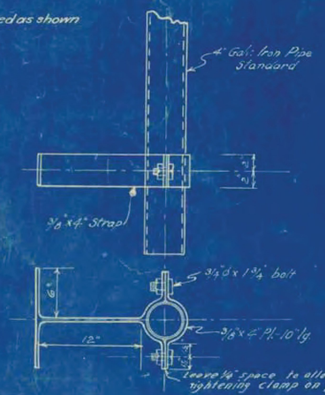

Clamp and pipe to receive two coats of red lead and oil and two coats of approved white guard rail paint.

DRAIN PIPE DETAIL
(See Sheet SB-2)
Scale 1½"=1'-0"

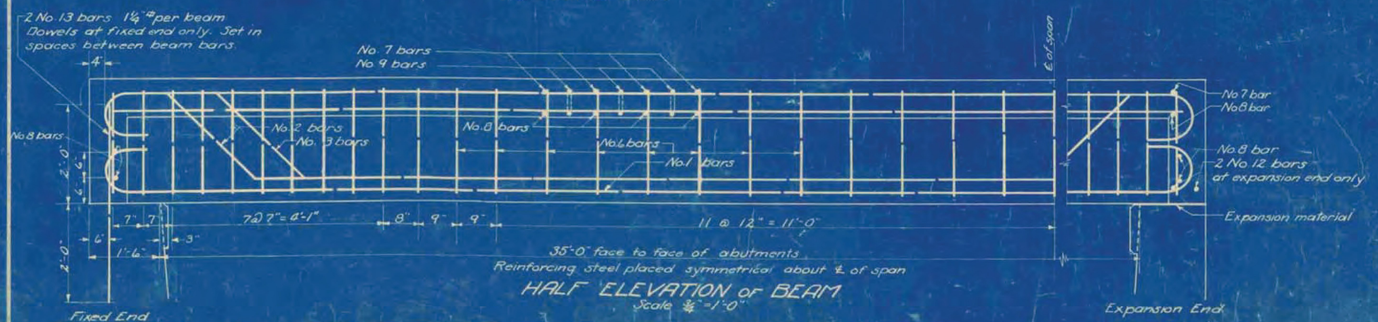

HALF ELEVATION of BEAM
Scale ⅜"=1'-0"

TEE BEAM BRIDGE
35'-0" CLEAR SPAN
20' ROADWAY
2-15 TON TRUCKS
OR 100# PER SQ. FT.
CORRECT:
A. D. Bishop
BRIDGE ENGINEER

Corrected to-Feb. 27, 1929

ESTIMATED QUANTITIES	
Class A (1-2-4) concrete	39 Cu. Yds.
Reinforcing Steel (including expansion device)	12,260 Lbs

Surveyed by
Designed by
Drawn by A.F.T.
Traced by A.F.T.
Checked by M.P. Woodruff 5/1/28
Series 1928 No. 35 Filed
Sheet of Sheets

St. Johnsbury
BRO-1447(30)
Sheet 62 of 76
For Reference Only

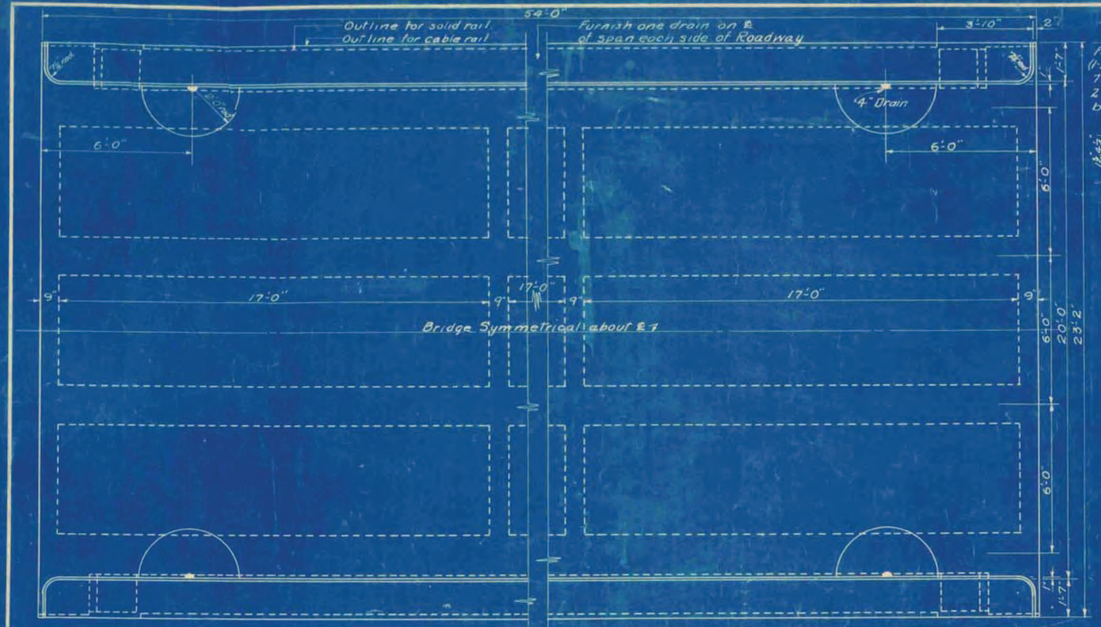

PLAN
Scale: 3/16" = 1'-0"

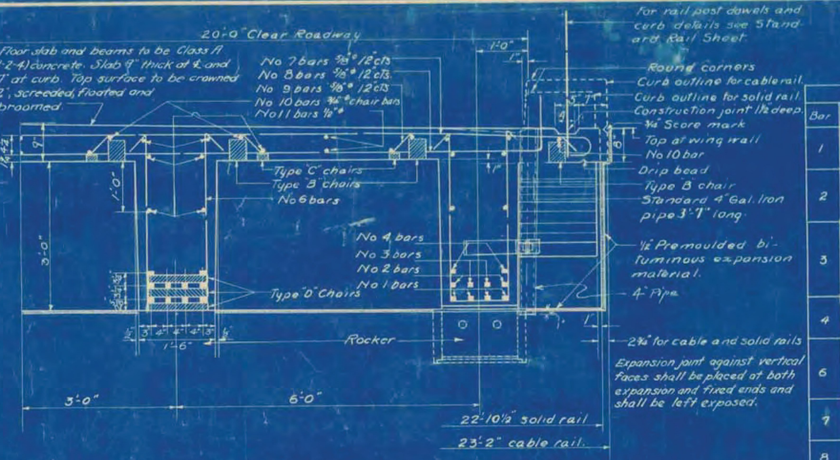

HALF SECTION THROUGH ROADWAY
Scale: 3/16" = 1'-0"

For rail post dowels and curb details see Standard Rail Sheet.
Round corners
Curb outline for cable rail
Curb outline for solid rail
Construction joint 1½ deep
¾" Score mark
Top of wing rail
No 10 bar
Drip bead
Type B chair
Standard 4" Gal. Iron pipe 3'-1" long.
½" Premoulded bituminous expansion material.
4" Pipe.
2½" for cable and solid rails
Expansion joint against vertical faces shall be placed at both expansion and fixed ends and shall be left exposed.

STEEL SCHEDULE			
Bar	Size	Lgth	Detail
1	1¼" sq	56'-0"	
2	1⅛" sq	58'-3"	
3	1⅛" sq	51'-6"	
4	1⅛" sq	47'-3"	
6	½" ℄	8'-10"	
7	5/8" ℄	24'-0"	
8	5/8" ℄	23'-0"	
9	5/8" ℄	22'-6"	

Bar	Size	Lgth
10	5/8" ℄	27'-6"
11	5/8" ℄	27'-6"
12	5/8" ℄	22'-6"
13	½" ℄	5'-3"
14	3/8" ℄	13'-0"
18	3/8" ℄	3'-6"

Bar	Size	Lgth	A	B
15	3/8" ℄	7'-0"	1'-0"	3'-0"
16	3/8" ℄	4'-6"	1'-0"	1'-6"
17	See detail below			

Notes:
The correctness of this steel schedule is not guaranteed and no claim will be allowed for any inaccuracy therein.
All steel to be deformed bars. Reinforcing steel shall conform to the Standard Specifications for Billet Steel Concrete Reinforcement Bars, Intermediate or Structural Grade, of the American Society for Testing Materials, Serial Designation A15-14
All bar detail dimensions refer to ℄ of steel.
All work and materials shall conform to the Standard Road and Bridge Specifications of the State of Vermont, 1926.
For typical details see sheet SB-2. Use details

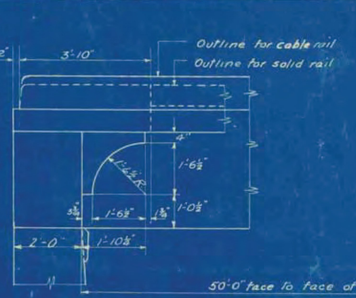

SIDE ELEVATION AT ABUTMENTS

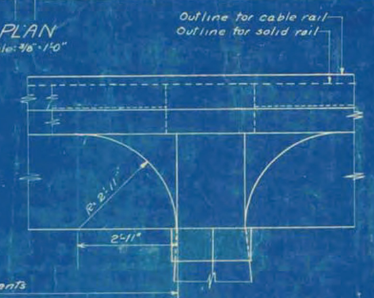

SIDE ELEVATION
for MULTIPLE SPANS

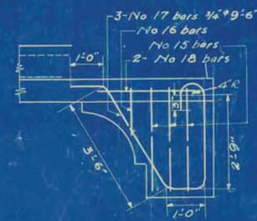

BRACKET DETAIL
SHOWING REINFORCEMENT STEEL

Clamp and pipe to receive two coats of approved red lead and oil and two coats of approved white guard rail paint.

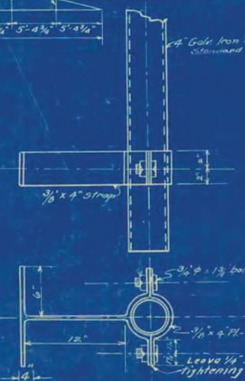

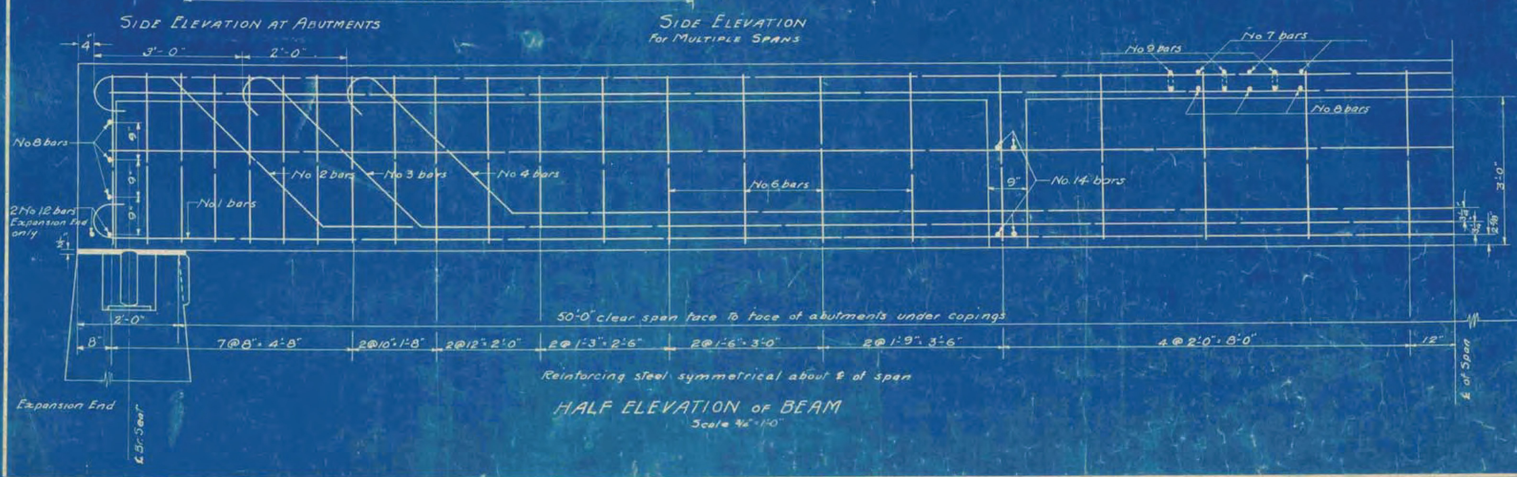

HALF ELEVATION OF BEAM
Scale ¾" = 1'-0"

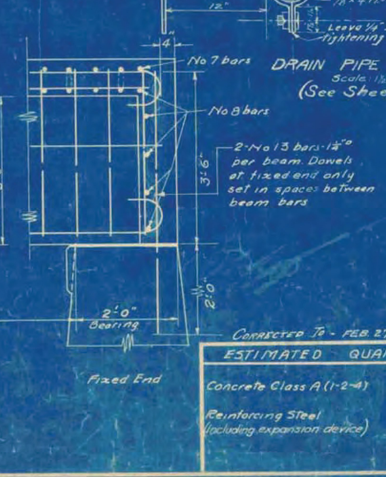

DRAIN PIPE DETAIL
Scale: 1½" = 1'-0"
(See Sheet SB-2)

Fixed End

CAMBER DIAGRAM
Slab, curb and rail shall be cambered as shown.

54'-0"

ESTIMATED QUANTITIES	
Concrete Class A (1-2-4)	70 Cu. Yds.
Reinforcing Steel (including expansion device)	20230 Lbs.

CORRECTED TO - FEB. 27, 1929

St. Johnsbury
BRO-1447(30)
Sheet 63 of 76
For Reference Only

TEE BEAM BRIDGE
50'-0" CLEAR SPAN
20' ROADWAY
2-15 TON TRUCKS
OR 100# PER SQ. FT.

CORRECT
A. D. Bishop
BRIDGE ENGINEER

Surveyed by	
Designed by	
Drawn by D.W.P.	9/1/28
Traced by D.W.P.	9/1/28
Checked by	
Series 1782 No. 50	Filed
Sheet of	Sheets

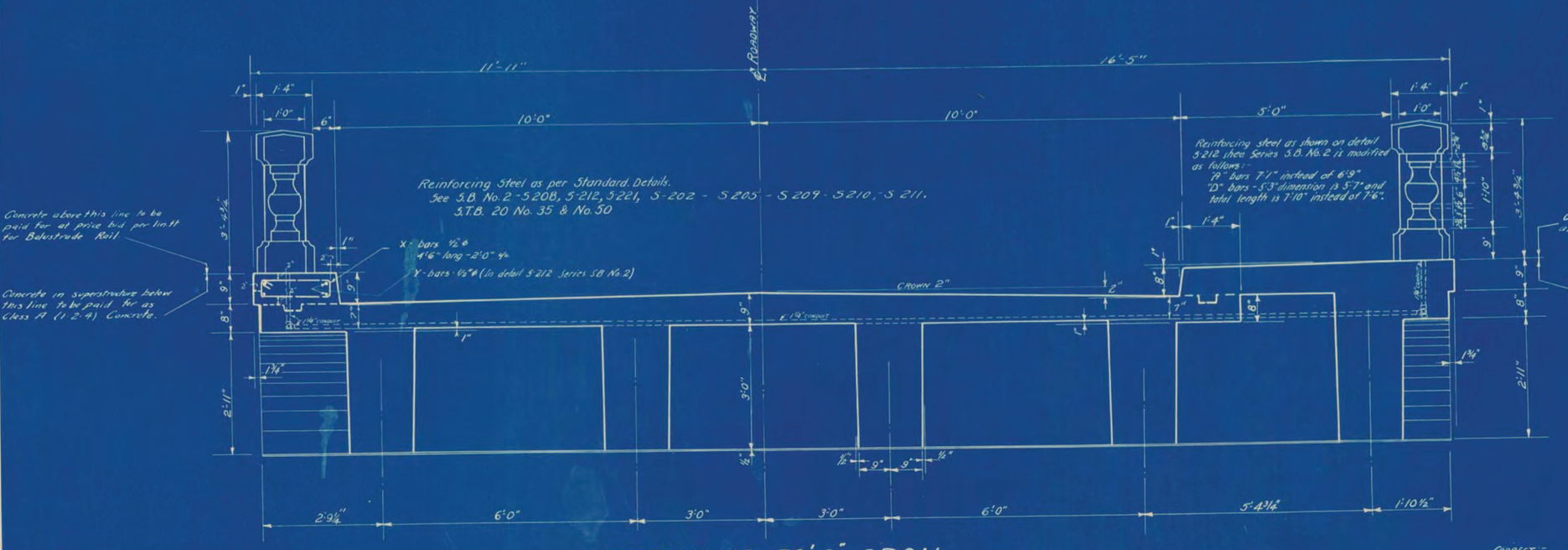

SECTION OF 50'-0" SPAN

35'-0" Span similar except for size of beams.

SUPERSTRUCTURE DETAILS

GAS PLANT BRIDGE

ST. JOHNSBURY, VT.

St. Johnsbury
BRO-1447(30)
Sheet 64 of 76
For Reference Only

CORRECT:-

BRIDGE ENGINEER

Quantities for 3 Spans	
Concrete - Class "A" (1:2:4)	202 C.Y.
Reinforcing Steel	58,000 lbs
Balustrade Rail	260 Lin. Ft.
Lighting System	1 Lump Sum

Surveyed by		
Designed by	STANDARD	
Drawn by	M.W.D.	4-20-29
Traced by	A.G.	4-20-29
Checked by	H.W.M.	
Series F.R.P. No. 156	Filed	
Sheet 35 of 97 Sheets		

Beams and floor of spans 1 & 3 to have a permanent camber not less than ½" and not more than ¾".
Beams and floor of span 2 to have a permanent camber not less than ¾" and not over 1¼".
Top of curb, sidewalk and railing shall be built to true grade.

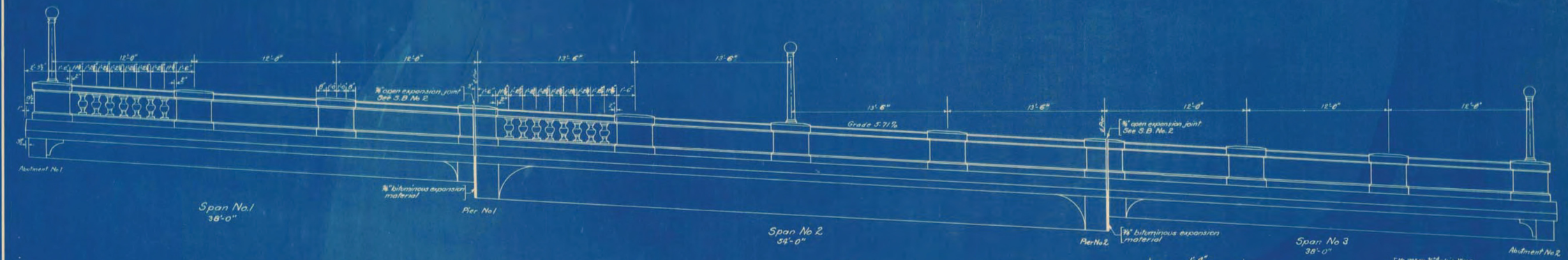

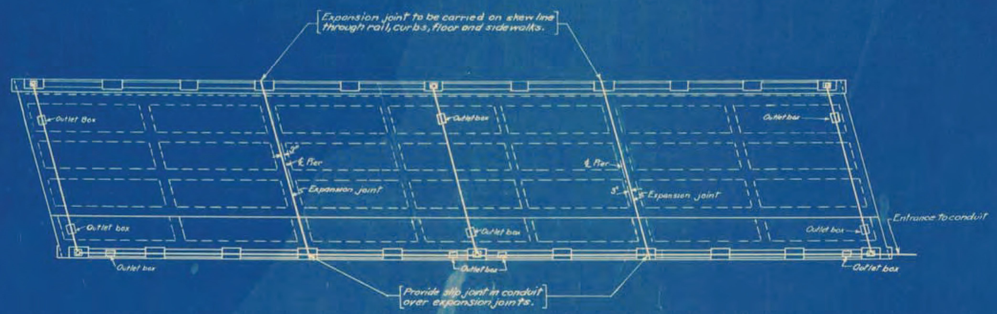

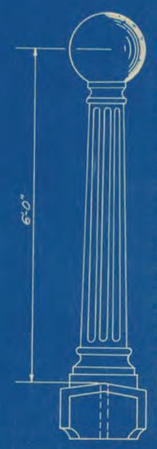

One light required (110 Volts - 100 Watts)
Globe 16" x 18"
Size of base at post 11" square.
Diameter of fluted shaft - 5" at top - 8" at bottom.
Base, shaft and capitol to be separate.
Base and capitol to be best grade of tough gray foundry cast iron.
Shafts to be Cody of No. 22 U.S. gauge bearing steel, locked seamed, die fluted and pressed firmly together, no solder or rivets used.
6 complete standards required.
Company furnishing light standards shall provide anchor bolt plans.
Anchor bolts for light standards shall be placed in post forms before concrete is poured.
Lump sum bid for lamp posts shall cover the complete cost of labor and materials and for the installation of the following lighting system.
6 complete standards, conduits, wiring and all incidentals necessary for the complete lighting of the bridge, but not to include wiring from the inlet of the bridge to the pole. All work and materials entered into the lighting system installation for the bridge shall be standard work and materials required for this class of work and shall be performed in such a manner as to conform to the code of the National Board of Fire Underwriters.
Lamp standards to receive 1 field coat of approved red lead and oil, one field coat of Standard white guard rail paint, tinted to give any color satisfactory to the Engineer.
Standard conduit pipe for electric wiring.
Conduit to be correctly placed in position before concrete is poured.
Size of all conduit pipe to be 1½" ø unless otherwise approved by the Engineer.

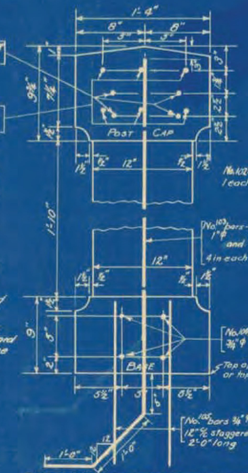

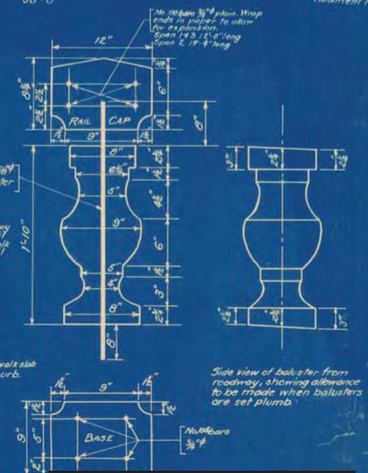

St. Johnsbury
BRO-1447(30)
Sheet 65 of 76
For Reference Only

SUPERSTRUCTURE DETAILS
GAS PLANT BRIDGE
ST. JOHNSBURY

Surveyed by
Designed by
Drawn by Clifford
Traced by Clifford
Checked by Bishop
Series No. Filed
Sheet 36 of 97 Sheets

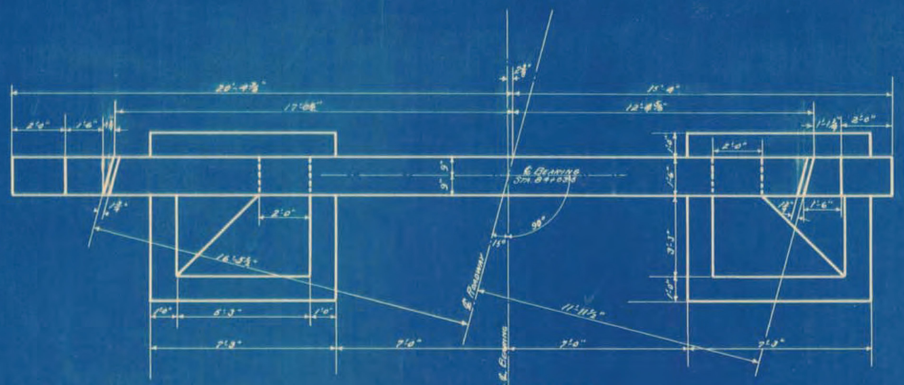

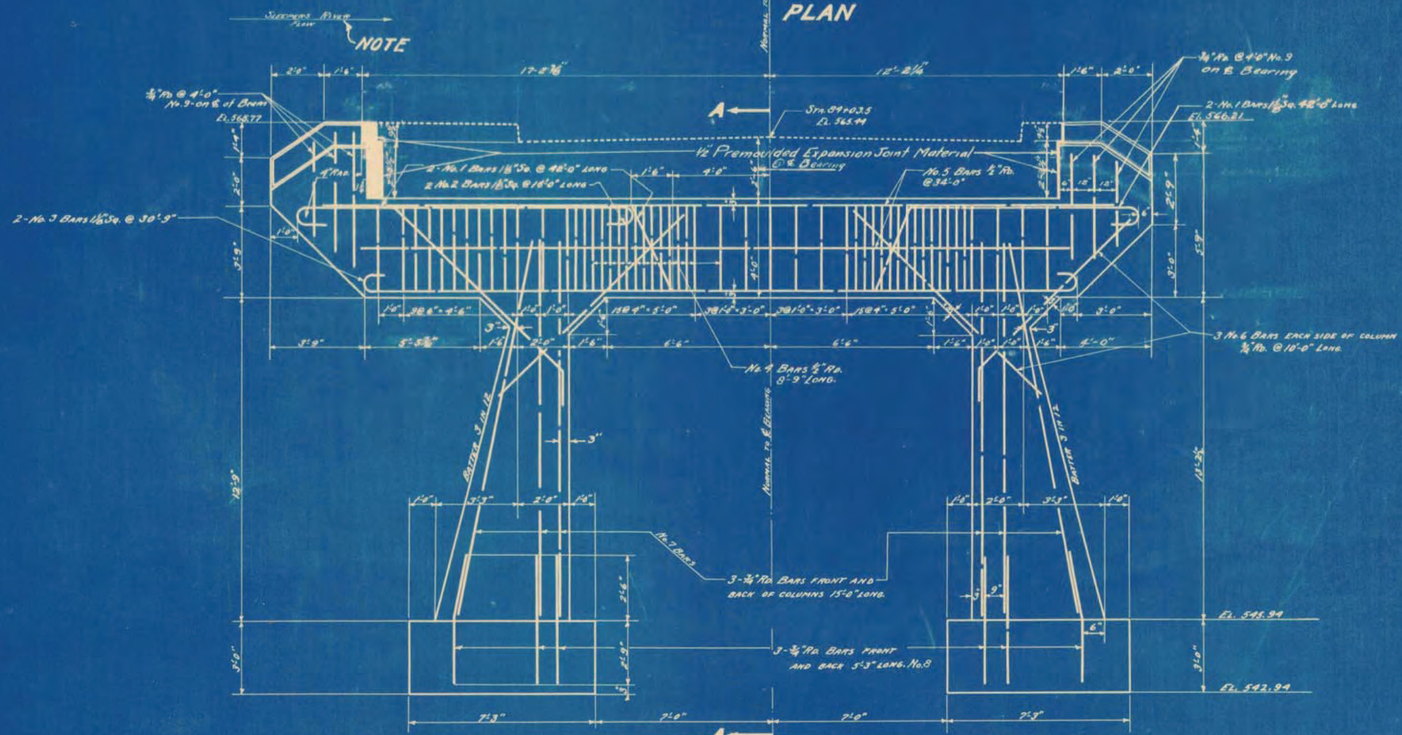

ELEVATION

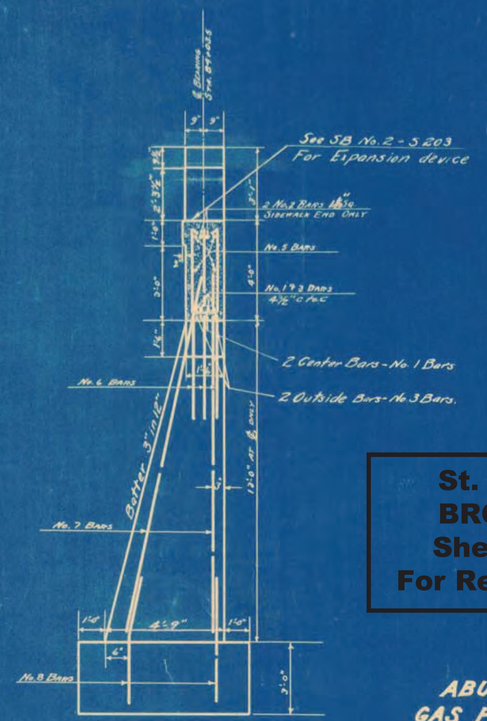

SECTION A-A

St. Johnsbury
BRO-1447(30)
Sheet 66 of 76
For Reference Only

ABUTMENT NO. 1
GAS PLANT BRIDGE
ST. JOHNSBURY

ESTIMATED QUANTITIES	
Structure Excavation	70 Cu. Yds.
Concrete Class C (1:2:4)	31.5 Cu. Yds.
Reinforcing Steel	1730 Lbs.

Surveyed by
Designed by M.W.D.
Drawn by M.W.D. & W.G.B.
Traced by W.G.B.
Checked by H.W.M.
Series F.R.P. No. 15 G Filed
Sheet 37 97 Sheets

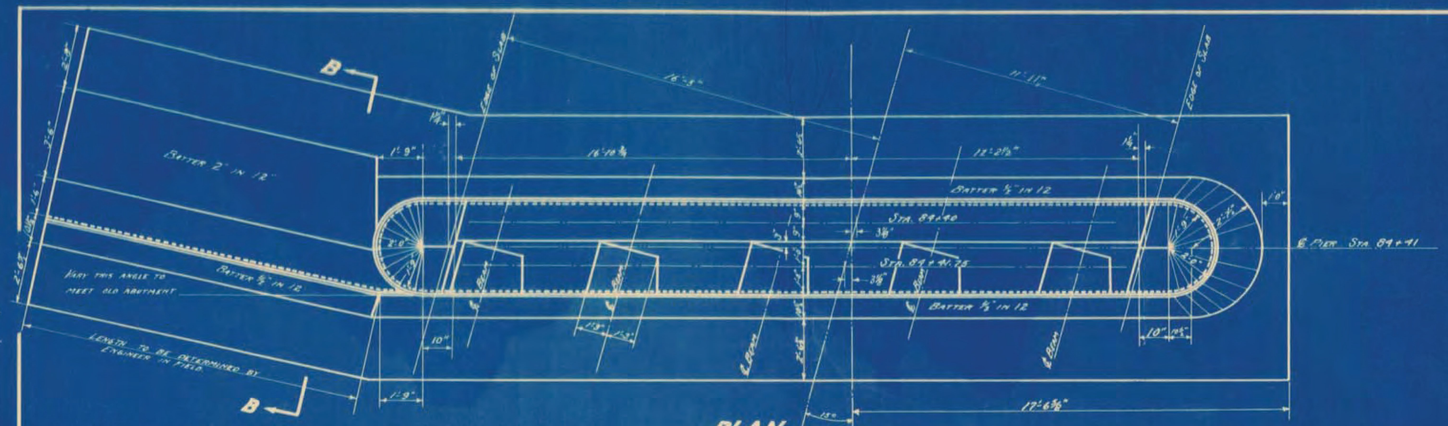

NOTE

Flow
Sleepers River

If Stationing is changed in field the Engineer will revise elevations to conform with grade.

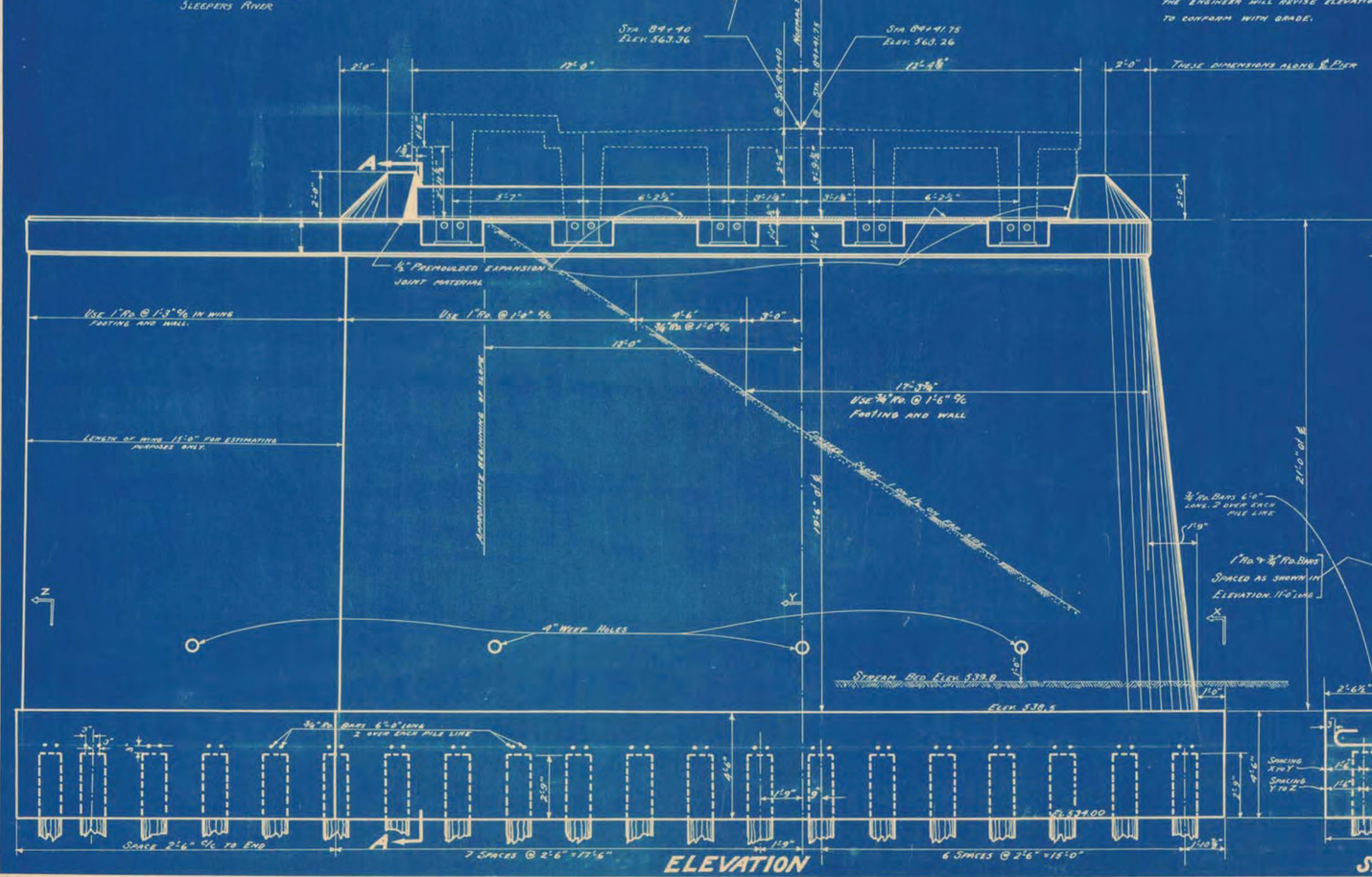

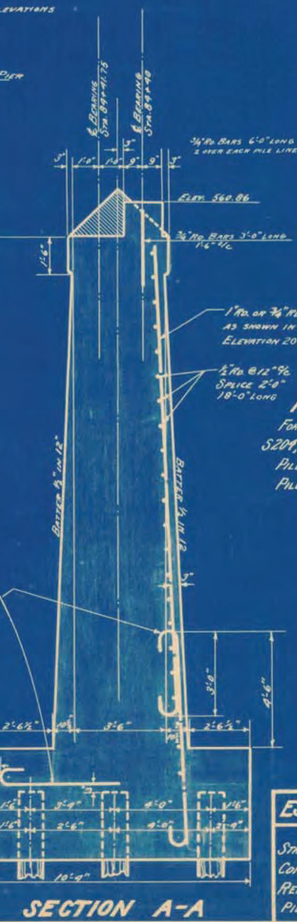

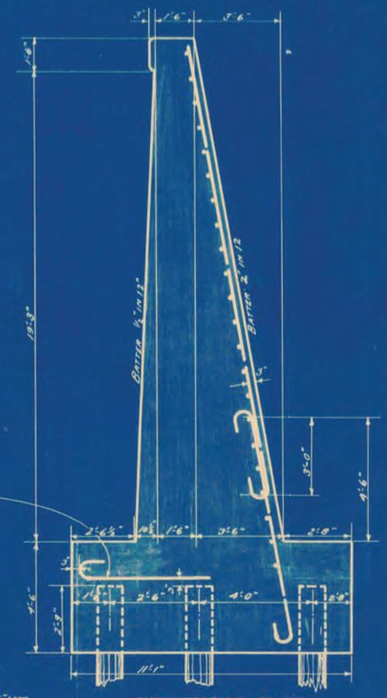

NOTES-

For General Notes and Typical Details see Sheet S.B. No. 2-Details S204, S220, S221.

Piles to be driven to 20 ton capacity.

Piles 35'-0" long for estimating purposes only.

St. Johnsbury
BRO-1447(30)
Sheet 67 of 76
For Reference Only

PIER NO. 1

GAS PLANT BRIDGE
ST. JOHNSBURY

ESTIMATED QUANTITIES	
Structure Excavation	150 Cu. Yds.
Concrete Class C (1:2:4)	253 Cu. Yds.
Reinforcing Steel	4214 Lbs.
Piles (60 @ 35')	2100 Lin. Ft.

Surveyed by
Designed by M.W.D.
Drawn by M.W.D.
Traced by W.G.B.
Checked by
Series No. Filed
Sheet 38 of 97 Sheets

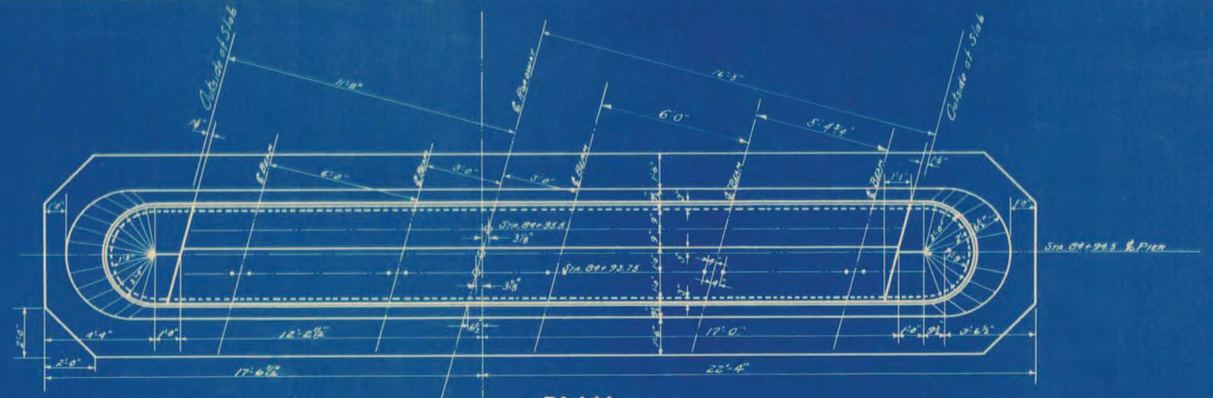

PLAN

NOTES:

S.B. No. 2 - S 204, S 220, S 221, S 211, S 206.

S.B. No. 2A - S 223.

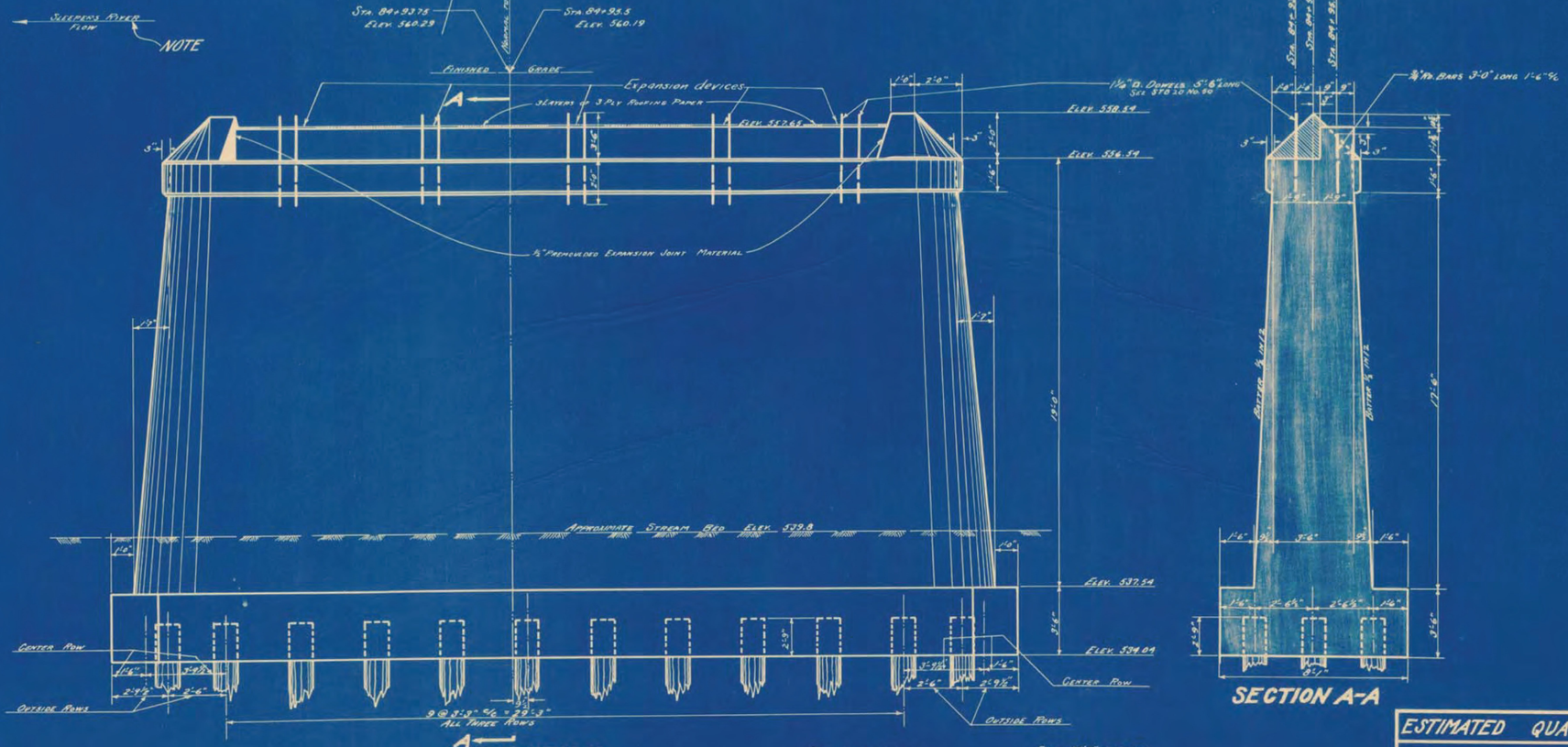

ELEVATION

SECTION A-A

St. Johnsbury
BRO-1447(30)
Sheet 68 of 76
For Reference Only

PIER NO. 2
GAS PLANT BRIDGE
ST. JOHNSBURY

ESTIMATED QUANTITIES	
Structure Excavation	90 Cu. Yds.
Concrete Class B (1-2½-5)	146 Cu. Yds.
Reinforcing Steel	90 Lbs.
Timber Piling	1260 Lin. Ft.

Surveyed by
Designed by M.W.D.
Drawn by M.W.D.
Traced by W.G.B.
Checked by H.W.M.
Series FRP 156 Filed
Sheet 39 of 97 Sheets

Notes:

SB. No. 2 - S204, S220, S221.

SB. No. 2A - S223.

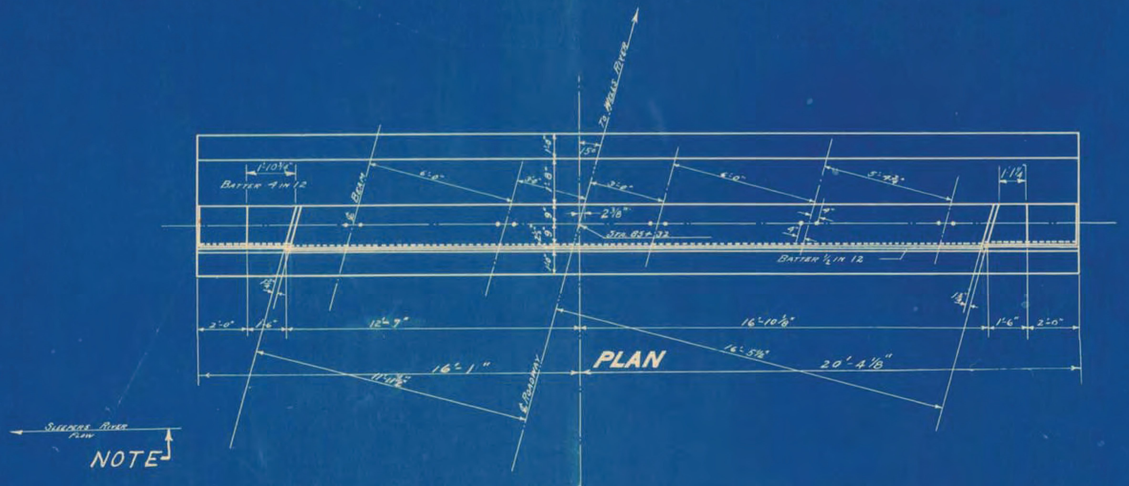

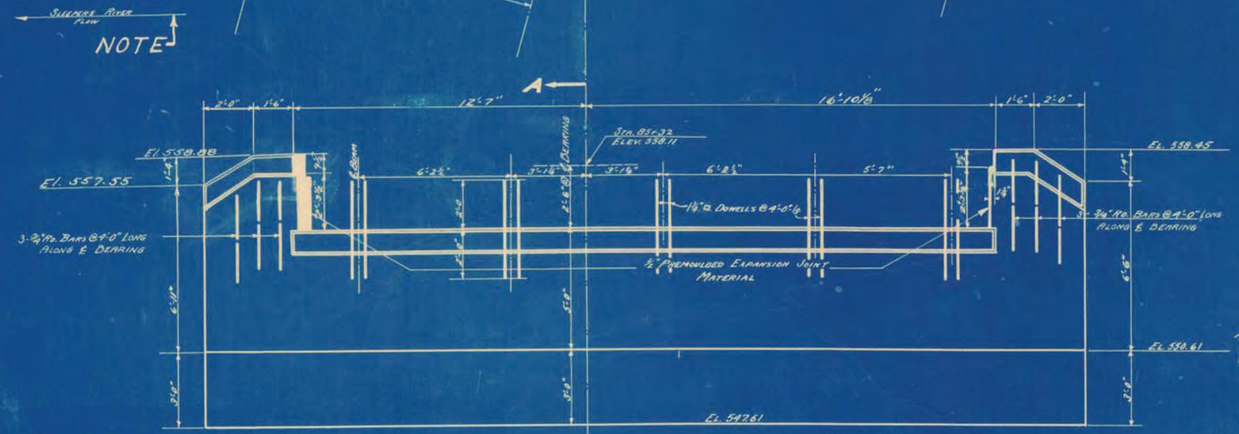

IF SUITABLE FOUNDATION IS NOT REACHED AT ELEV. 547.61 FOOTINGS SHALL BE LOWERED AS DIRECTED BY THE ENGINEER.

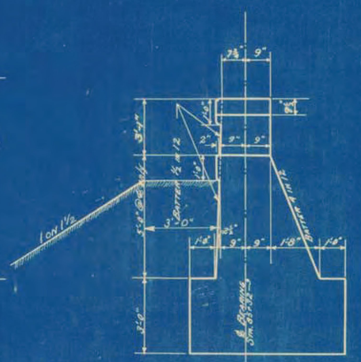

SECTION A-A

St. Johnsbury
BRO-1447(30)
Sheet 69 of 76
For Reference Only

ABUTMENT NO. 2
GAS PLANT BRIDGE
ST. JOHNSBURY

ESTIMATED QUANTITIES		
Structure Excavation	50	Cu. Yds.
Concrete Class C (1:2:4)	39	Cu. Yds.
Reinforcing Steel	36	Lbs.

Surveyed by
Designed by M.M.D.
Drawn by M.M.D.
Traced by H.G.B.
Checked by H.W.M
Series F.R.P. No. 156 Filed
Sheet 40 of 97 Sheets

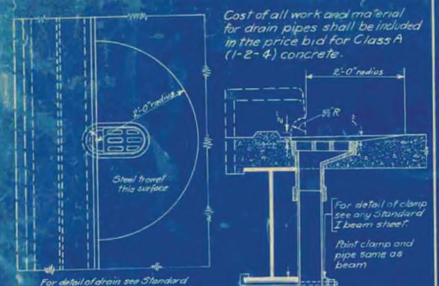

DRAIN DETAIL FOR I-BEAM BRIDGES

STANDARD DETAIL-S201

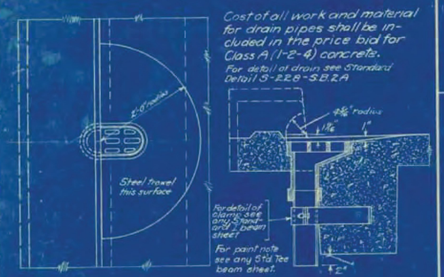

DRAIN DETAIL FOR TEE BEAM BRIDGES

STANDARD DETAIL-S 202

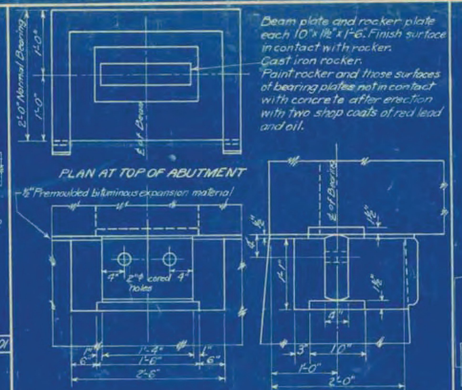

ROCKER EXPANSION DEVICE AND POCKET FOR TEE BEAM SPANS OF 45' AND OVER

STANDARD DETAIL-S 205

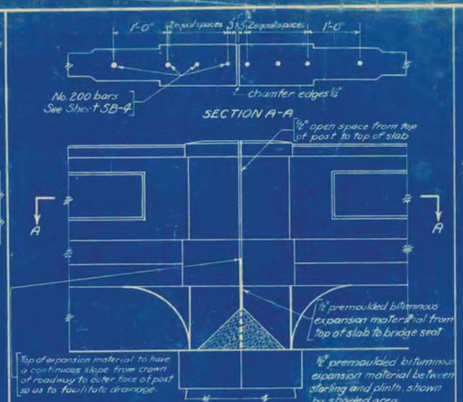

EXPANSION POST AT PIER FOR SOLID RAILS AS SHOWN ON SHEET SB-4

Condition shown is for one span expanding on pier. If two spans expand on pier increase ℄ dimensions ½".

STANDARD DETAIL-S210

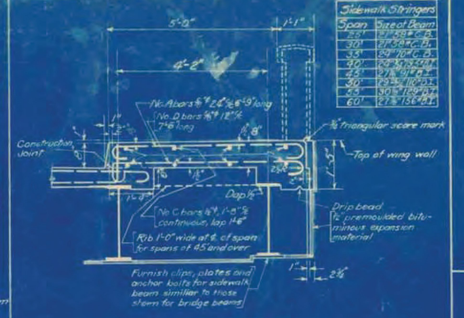

SIDEWALK DETAIL FOR STANDARD I BEAM BRIDGES

Quantities to be Added per Sidewalk to Roadway Quantities				
Span	Conc. Class A	Plain Steel	Struc. Steel	
25	4.2	428	1600	
30	5.0	508	1825	
35	5.7	587	2015	
40	6.5	667	3580	
45	7.4	759	4910	
50	8.1	832	5890	
55	8.9	913	7540	
60	9.7	993	9900	

STANDARD DETAIL-S 213

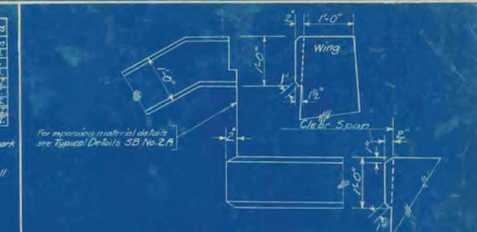

TYPICAL COPINGS

STANDARD DETAIL-S220

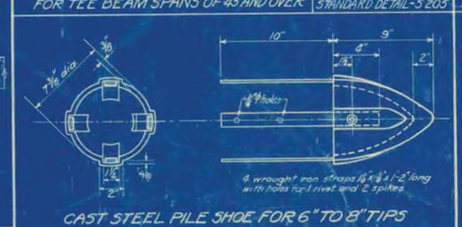

CAST STEEL PILE SHOE FOR 6" TO 8" TIPS

STANDARD DETAIL-S 206

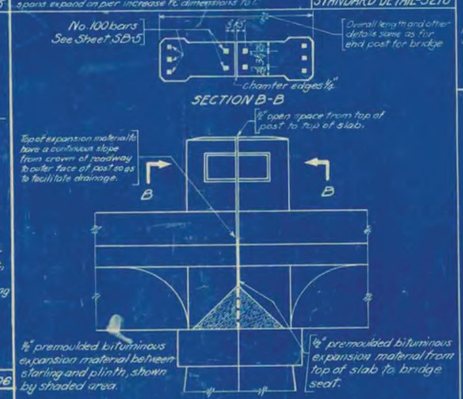

EXPANSION POST AT PIER FOR CABLE RAILS AS SHOWN ON SHEET SB-5

Condition shown is for one span expanding on pier. If two spans expand on pier increase ℄ dimensions ½".

STANDARD DETAIL-S211

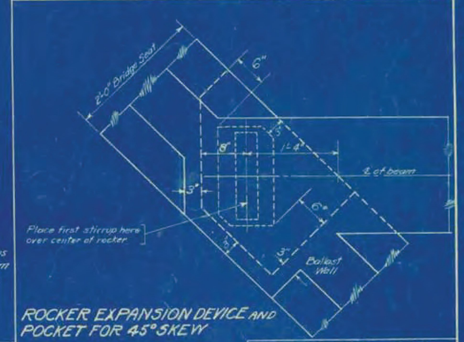

ROCKER EXPANSION DEVICE AND POCKET FOR 45° SKEW

STANDARD DETAIL-S 214

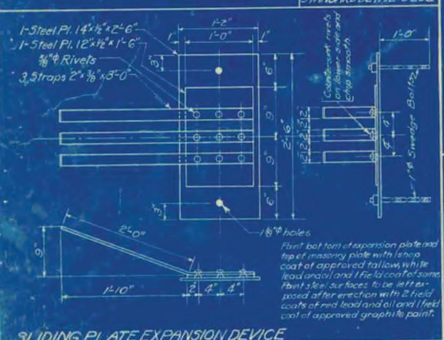

SLIDING PLATE EXPANSION DEVICE FOR 35° & 40' SPAN TEE BEAMS

STANDARD DETAIL-S203



DETAILS-SCORE MARKS & CONSTRUCTION JOINTS FOR PIERS & ABUTMENTS

Unless otherwise directed by the Engineer, score pieces shall be equally spaced vertically at about 1'-9" for abutments up to 20' in height and 2'-6" for abutments above 20' in height, shall stop at underside of copings and shall be carried around ends of walls or piers where they may be exposed to view. Score marks shall line horizontally and shall be at same levels in all piers and abutments on the job. Construction joint may be made at any score mark.

Note: This detail is identical with S.B.-sheet SB-1

STANDARD DETAIL-S204

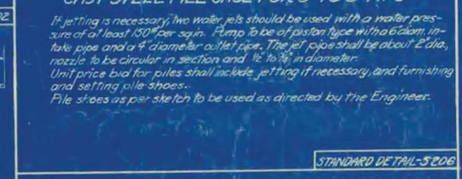

PIER NOSE ANGLE

STANDARD DETAIL-S207

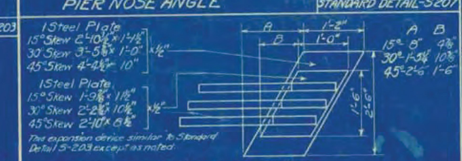

SLIDING PLATE EXPANSION DEVICE FOR 35° & 40° SKEW SPAN TEE BEAMS

STANDARD DETAILS 209

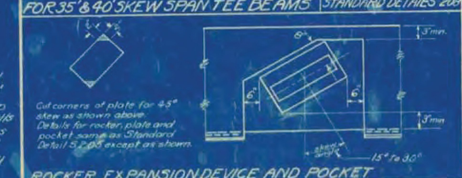

ROCKER EXPANSION DEVICE AND POCKET FOR TEE & I BEAM SKEW SPANS OF 45° AND OVER

STANDARD DETAIL-S 208

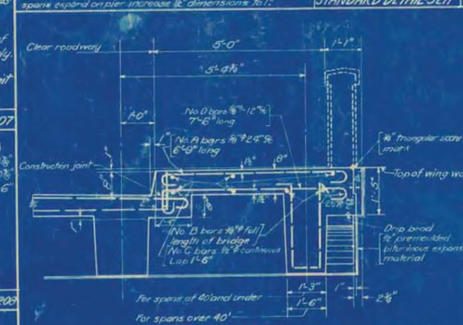

SIDEWALK DETAIL FOR STANDARD TEE BEAM BRIDGES



DETAILS FOR 45° I BEAM BRIDGE

STANDARD DETAIL-S215

Span	Reinforcing steel in beam. Bending details same as for I beam bridge beams		# Stirrups W	Ht	Spacing from end of beam No. spaces @					Dowel 25.3# ℄ 12½" radius 1'-6" long	Estimated quantities for one sidewalk and one beam	
	Mark	Det. Mark			1 @ 6"	2 @ 9"	3 @ 12"	4 @ 15"	5 @ 30"	No. Req'd.	Concrete C.Y.	Steel #
25	2	No. 1	11"	6'-4"	6'-6"	4	2	2	2	1	23	2.8	6.3	384
	1	No. 2												
30	2	No. 1	11"	7'-1"	7'-0"	4	2	2	2	2	25	3.3	7.8	1265
	1	No. 2												
35	3	No. 1	11"	7'-9"	7'-0"	4	2	2	2	3	27	3.8	9.0	1704
	1	No. 2												
40	3	No. 1	11"	8'-4"	7'-6"	4	2	2	2	4	29	4.3	10.7	2122
	2	No. 2												
45	4	No. 1	1'-8"	9'-1"	8'-3"	5	3	3	2	4	35	4.9	13.5	2660
	2	No. 2												
	1	No. 3												
50	4	No. 1												
	2	No. 2	1'-8"	9'-10"	9'-0"	5	3	3	2	5	37	5.4	17.8	3291
	1	No. 3												
55	4	No. 1												
	4	No. 3	1'-8"	10'-6"	10'-3"	5	4	4	2	5	41	5.9	24.3	3949

No. number of A bars required as there are D bars.
Estimated quantities to be added to quantities already given on Standard Bridge sheets.
Sidewalk beam reinforcement placed similar to Standard Bridge beam reinforcement.

SIDEWALK BEAM REINFORCEMENT FOR STANDARD TEE BEAM BRIDGES

STANDARD DETAIL-S212

GENERAL NOTES

The following notes shall govern the structures and details to which they apply.

All work and materials shall conform to the Standard Road and Bridge Specifications of the Vermont Highway Department, 1929.

Any suitable structure excavation used by the contractor for any purpose other than for backfill or approach fill shall be replaced by an equivalent quantity of borrow by the contractor as this expense unless same is ordered wasted by the Engineer.

Piles shall be provided where foundation cannot be obtained within a reasonable depth. They shall be spaced not closer than 2'-6" ℄ except as noted on plans or as directed by the Engineer. Where jetting is necessary, use Standard Detail S 206.

Foundations on ledge should preferably be sloped toward the back of the footing about 1" per foot and footings shown on plans for other conditions may be revised at the direction of the Engineer.

All concrete for piers and gravity abutments shall be class B (1-2½-5) concrete unless otherwise noted or directed.

All concrete for reinforced abutments shall be class C (1-2-4) concrete unless otherwise noted or directed.

All concrete for Tee, I Beam and Slab bridges, curbs and rails shall be class A (1-2-4) concrete and shall be paid for at the unit price for class A concrete.

All reinforcing steel for bridges and abutments shall be deformed bars, except as noted, and shall conform to the Standard Specifications for Billet Steel Concrete Reinforcement Bars, Structural or Intermediate Grade, of the American Society for Testing Materials, Serial Designation A15-14.

4" weep holes shall be provided in main abutment and wings spaced not further apart than 10'-0" ℄ symmetrically about the ℄ of abutment, pitched 1" per foot upward from front to back. The lower end of the weep hole shall be 2'-6" above footing. The cost of work and materials for weep holes shall be included in the unit price bid for concrete.

The premoulded bituminous expansion material between superstructure and substructure at expansion and fixed end, shall be included and paid for in price bid for class A (1-2-4) concrete.

All work and materials for expansion device to be included in and paid for at the unit price bid for reinforcing steel for Tee beam bridges.

Concrete chairs for supporting reinforcing steel shall be made to the dimensions shown on the Standard Chair sheet.

Structural steel for I beam bridges shall be painted as specified under Item 36 A-B, Pamphlet I of the Specifications unless otherwise directed.

All exposed edges shall be chamfered. The face dimension of chamfer to be 1".

Where pipes, existing or required, pass through abutments, they shall be of the materials and in the locations as directed by the Engineer. The cost of all pipes and materials for such work shall be included in and paid for under the unit bid for abutment concrete. Where pipes are to be carried through abutments, they shall be supported as and where directed by the Engineer and the cost of all work and materials shall be paid for under the unit price bid for superstructure reinforcing steel.

In case lighting is required for superstructure, special details will be furnished. All materials for such lighting shall be paid for under a separate lump sum bid, unless otherwise provided for.

STANDARD DETAIL - S221

TYPICAL DETAILS
TEE AND I BEAM BRIDGES AND ABUTMENTS
STATE OF VERMONT
DEPARTMENT OF HIGHWAYS

CORRECT: A.D. Bishop
BRIDGE ENGINEER

Corrected to March 1, 1929

Surveyed by
Designed by
Drawn by M.L.W.F. B.M.T.F. O.K.
Traced by C.D.L. and
Checked by
Series S.B. No. 2

St Johnsbury
BRO-1447(30)
Sheet 70 of 76
For Reference Only

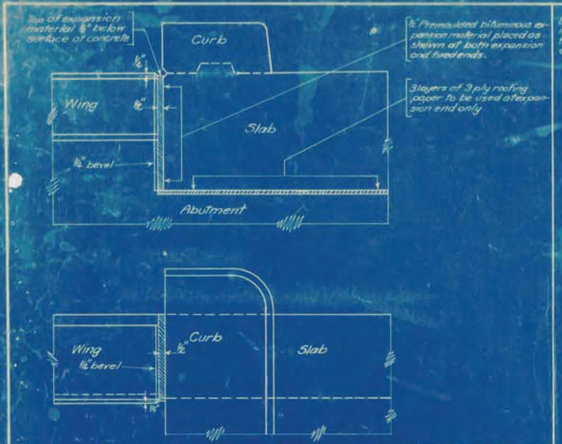

DETAIL OF EXPANSION MATERIAL FOR SLAB BRIDGES — STANDARD DETAIL-S222

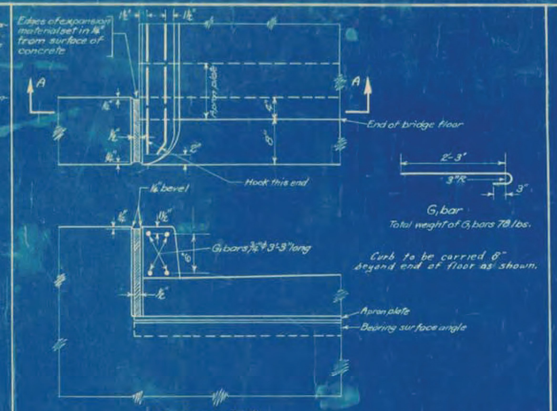

SECTION A-A

DETAIL OF CURB AND EXPANSION MATERIAL FOR STEEL BRIDGES UP TO 150' SPAN — STANDARD DETAIL-S225

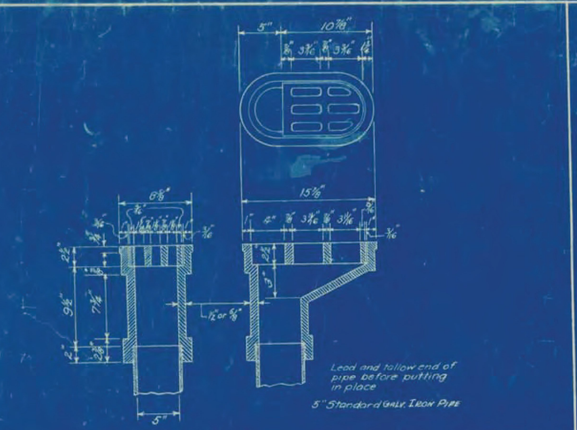

DETAIL OF DRAIN PIPE — STANDARD DETAIL-S226

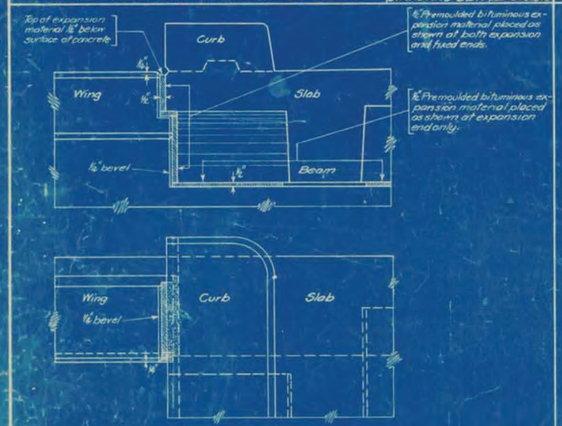

DETAIL OF EXPANSION MATERIAL FOR TEE BEAM BRIDGES — STANDARD DETAIL-S223

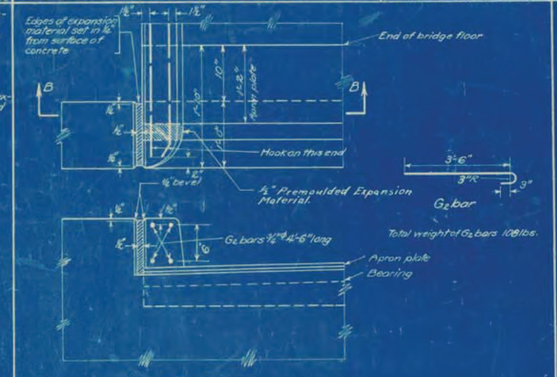

DETAIL OF CURB AND EXPANSION MATERIAL FOR STEEL BRIDGES OVER 150' SPAN — STANDARD DETAIL-S226

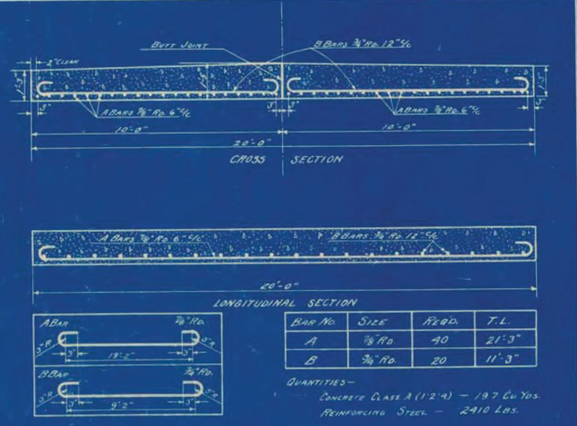

DETAIL OF APPROACH SLAB — STANDARD DETAIL-S229

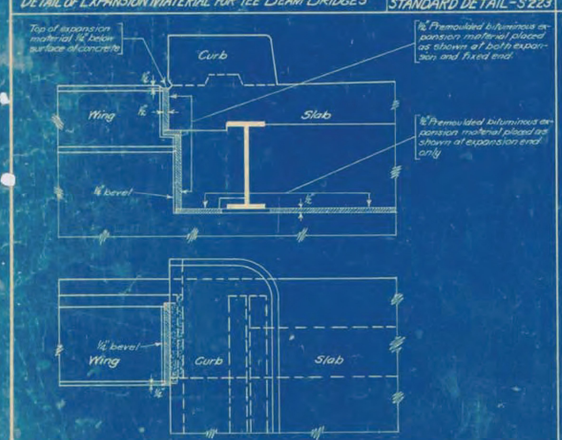

DETAIL OF EXPANSION MATERIAL FOR I BEAM BRIDGES — STANDARD DETAIL-S224

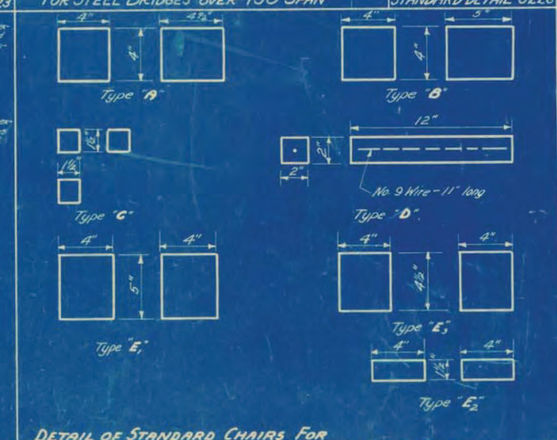

DETAIL OF STANDARD CHAIRS FOR TEE BEAM, I BEAM AND STEEL BRIDGES — STANDARD DETAIL-S227

St. Johnsbury
BRO-1447(30)
Sheet 71 of 76
For Reference Only

TYPICAL DETAILS
STATE OF VERMONT
DEPARTMENT OF HIGHWAYS

Corrected to March 1, 1929

CORRECT: A. E. Bishop
BRIDGE ENGINEER

Surveyed by
Designed by
Drawn by C.A.L. and
Traced by C.A.L. and
Checked by M.W.B.
Series SB No. 2A

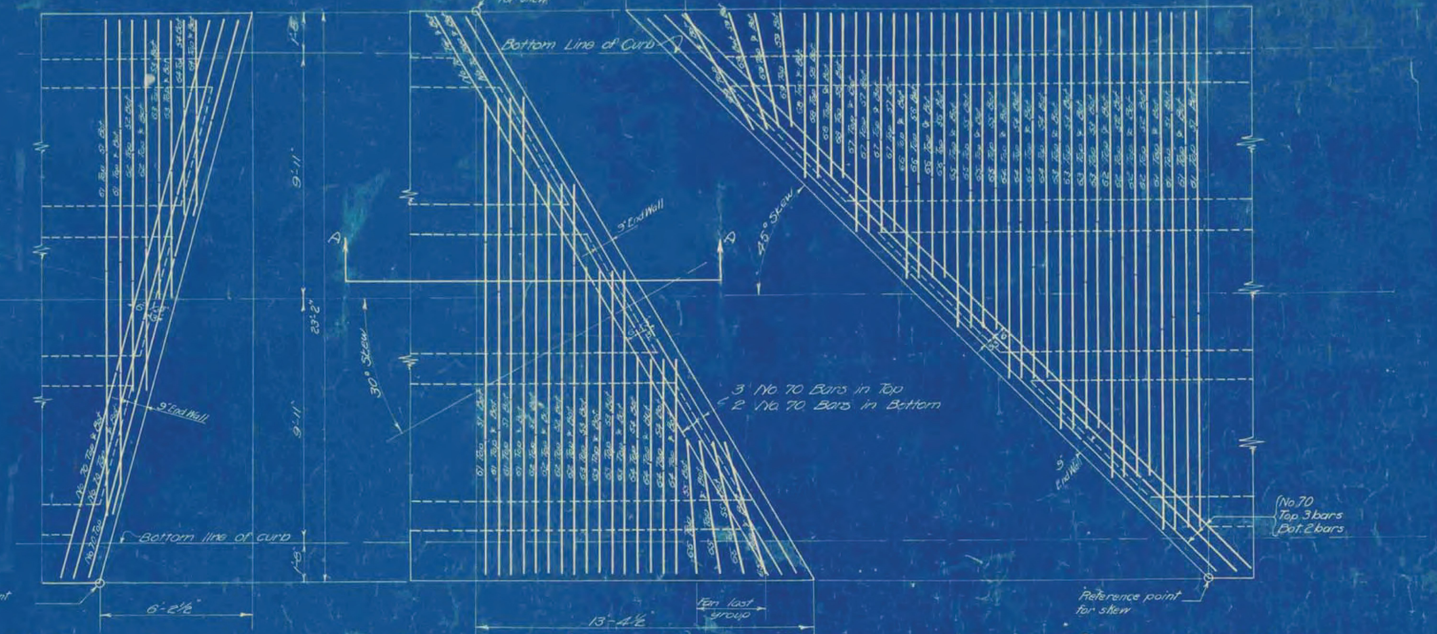

PLAN OF 15° SKEW ANGLE BRIDGE

PLAN OF 30° SKEW ANGLE BRIDGE

PLAN OF 45° SKEW ANGLE BRIDGE

Scale ⅜"-1'-0"

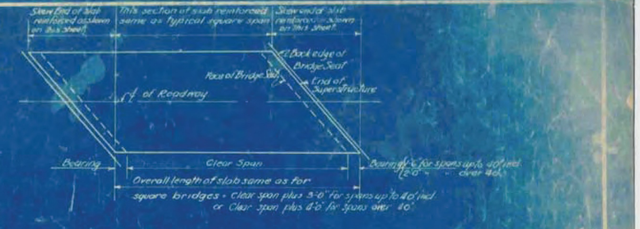

KEY PLAN

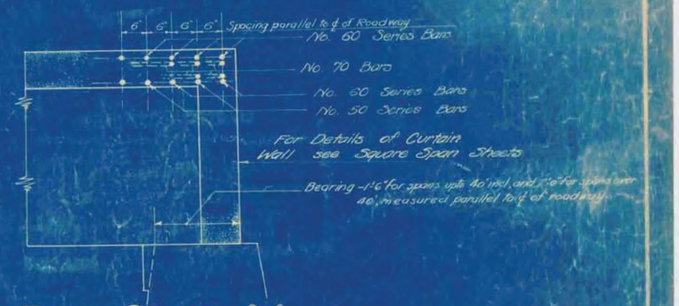

TYPICAL SECTION A-A

Scale ¾"-1'-0"

STEEL SCHEDULE ~ 15° SKEW
FOR 2 SKEW ENDS

Bar No.	Size	Total Length	L	
51	⅜ ø	21'-3"	20'-0"	
52	d6	16'-3"	15'-0"	
53	d6	12'-6"	11'-3"	
54	d6	9'-3"	8'-0"	
61	d6	20'-0"	Straight	
62	d6	15'-0"	"	
63	d6	11'-3"	"	
64	d6	8'-0"	"	
70	d6	23'-0"	"	

For concrete quantities of 15° skew bridges use the same quantities as for square bridges of corresponding span.

For steel quantities of skew bridges add 270 lbs. reinforcing steel to the square bridge quantities.

STEEL SCHEDULE ~ 30° SKEW
FOR 2 SKEW ENDS

Bar No.	Size	Total Length	L	
51	⅜ ø	20'-6"	19'-3"	
52	d6	17'-0"	15'-9"	
53	d6	13'-6"	12'-3"	
54	d6	10'-0"	8'-9"	
55	d6	6'-6"	5'-3"	
61	d6	19'-3"	Straight	
62	d6	13'-9"	"	
63	d6	12'-3"	"	
64	d6	8'-9"	"	
65	d6	5'-3"	"	
70	d6	26'-0"	"	

For concrete quantities of 30° skew bridges from 20' to 42' span, add nothing to the quantities of square bridges of corresponding span; for skew spans from 45° to 55° add ½ cu yd.

For steel quantities of skew bridges add 380 lbs. reinforcing steel to the square bridge quantities.

Note: Bars Nos. 10 and 11 are not shown in plan on this sheet but the weights are included in the quantities.

They should be furnished the same length and in the same numbers as for square bridges of the same span.

Reinforcement and concrete section of concrete beams for skew spans same as for square spans.

Cut off of steel I beams for skew I beam bridges shall be made at skew angle, or one flange at each end bevelled or burned off at skew angle.

STEEL SCHEDULE ~ 45° SKEW.
FOR 2 SKEW ENDS

Bar No.	Size	Total Length	L	
51	⅜ ø	22'-3"	21'-0"	
52	d6	20'-0"	18'-9"	
53	d6	18'-0"	16'-9"	
54	d6	15'-0"	14'-9"	
55	d6	14'-0"	12'-9"	
56	d6	12'-0"	10'-9"	
57	d6	10'-0"	8'-9"	
58	d6	8'-0"	6'-9"	
59	d6	6'-0"	4'-9"	
61	d6	21'-0"	Straight	
62	d6	18'-9"	"	
63	d6	16'-9"	"	
64	d6	14'-9"	"	
65	d6	12'-9"	"	
66	d6	10'-9"	"	
67	d6	8'-9"	"	
68	d6	6'-9"	"	
69	d6	4'-9"	"	
70	d6	32'-0"	"	

For concrete quantities of 45° skew bridges from 20' to 40' span, add ½ cu yd to the quantities of square bridges of corresponding span; for skew spans from 45° to 55° add 1 cu yd.

For steel quantities of skew bridges add 720 lbs. reinforcing steel to the square bridge quantities.

General Notes

The Correctness of the steel Schedule is not guaranteed and no claim will be allowed for any inaccuracy therein.

All Steel to be deformed Bars. Reinforcing Steel shall conform to the Standard Specifications for Billet Steel Concrete Reinforcement Bars, Intermediate or Structural Grade of the American Society for Testing Materials Serial Designation A-15-14.

All Bar Detail Dimensions refer to ℄ of Steel.

All work and materials shall conform to the Standard Road and Bridge Specifications of the Vermont Department of Highways, 1926.

For details of bridge section between skew ends see Standard Tee and I beam sheets and typical detail sheet 382 as referenced thereon.

Slab thickness and crown for skew bridge ends shall be the same as for typical square span bridges with which they are used.

St. Johnsbury
BRO-1447(30)
Sheet 72 of 76
For Reference Only

SKEW ENDS
FOR TEE AND I BEAM BRIDGES
STATE OF VERMONT
DEPARTMENT OF HIGHWAYS

CORRECT: A D Bisbee
BRIDGE ENGINEER

Surveyed by
Designed by
Drawn by A.G.E. 4-24-28
Traced by A.G.E. 4-26-28
Checked by M C Woodruff 5/15/28
Series 38 No. 3 Files
Sheet of Sheets

1929

ALL STEEL TO BE DEFORMED BARS (EXCEPT AS NOTED) REINFORCING STEEL TO CONFORM TO STANDARD SPECIFICATIONS FOR BILLET STEEL CONCRETE REINFORCEMENT BARS OF THE AMERICAN SOCIETY FOR TESTING MATERIALS, SERIAL DESIGNATION A15-14, STRUCTURAL OR INTERMEDIATE GRADE

APPROACH SPANS

S1 BAR ¾" ROUND TOTAL LENGTH 10'-10" 40 BARS REQUIRED

S2 BAR ½" ROUND 19'-6" 12 BARS REQUIRED

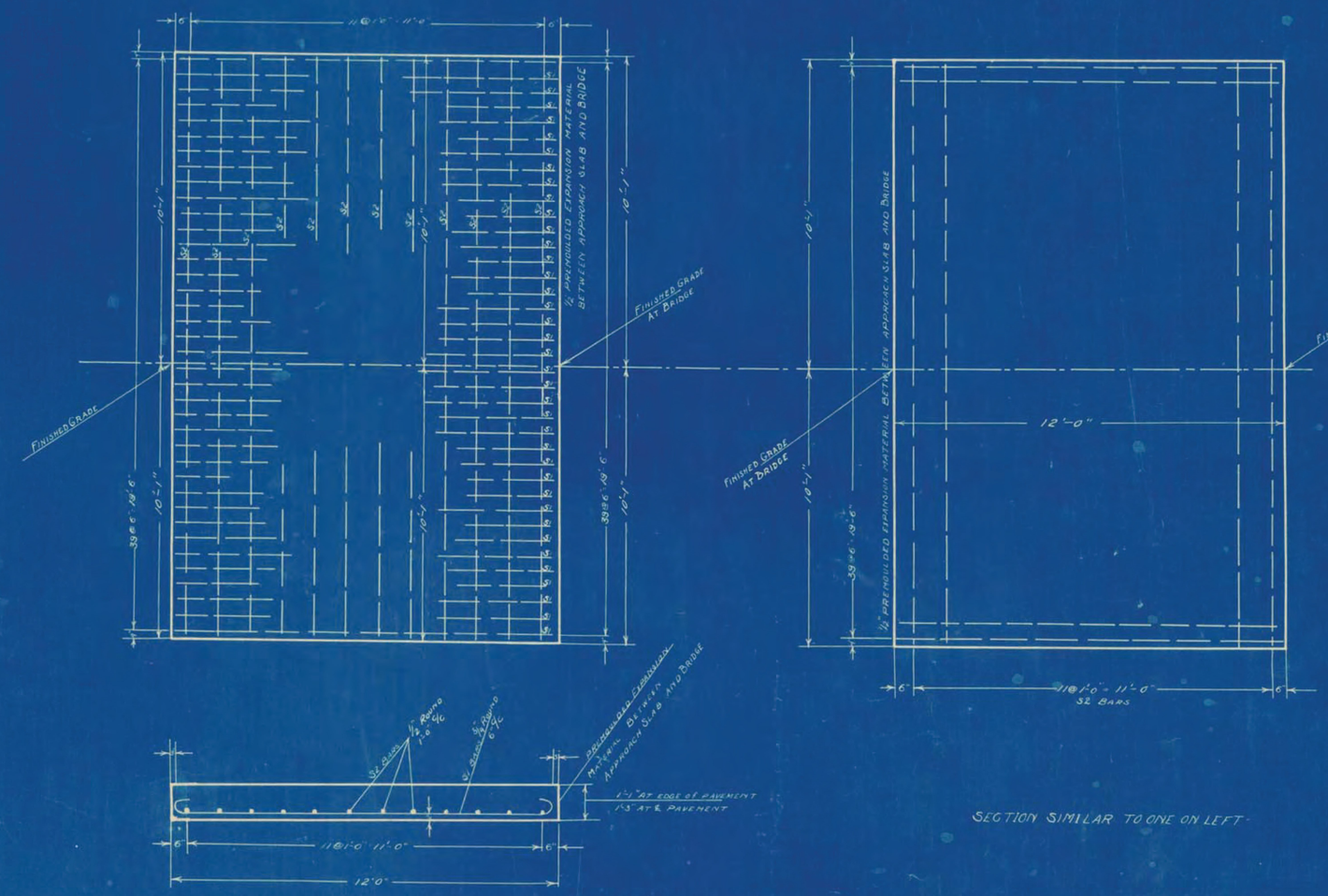

CONCRETE IN APPROACH SLABS TO BE PAID FOR UNDER UNIT BID PRICE FOR CONCRETE PAVEMENT TYPE B
REINFORCING STEEL IN APPROACH SLAB TO BE PAID FOR UNDER UNIT BID PRICE FOR REINFORCING STEEL ITEM 35

SECTION SIMILAR TO ONE ON LEFT

St. Johnsbury
BRO-1447(30)
Sheet 73 of 76
For Reference Only

APPROACH SLAB DETAILS
FOR BRIDGES ~~AT STATIONS~~
~~259+79 to 261+56~~
AND
~~314+89.7 to 316+95.5~~
ON F.A.P. 104A

APPROXIMATE ESTIMATED QUANTITIES

	BRIDGE 259+79 to 261+56	BRIDGE 314+89.7 to 316+95.5	TOTALS
ONE COURSE CEMENT CONCRETE PAVEMENT TYPE 'B'	21 CU.YDS.	21 CU.YDS.	42 CU.YDS.
REINFORCING STEEL	1950#	1950#	3900#

Surveyed by
Designed by
Drawn by
Traced by
Checked by
Series F No. 104A Filed
Sheet 42 of 98 Sheets

42-B

PLAN

DATE 1955 SCALE 1"=20'

SURVEYED Hand PLOTTED Hand NOTE BOOK No. 1 Models 1-A & 1-B

QUANTITIES CHECKED. STRUCTURE FRONT PROFILE

RT. OF WAY CHECKED.

N

P.C. 82+46.9 = 82+42.4
Δ = 40° 55'

(Revised)
P.I. 83+06.5
82+95.0

Edge of proposed pavement

House

House
C.E. Edwards

BORING NO. 2

St. Johnsbury Village
St. Johnsbury Town

Boring No. 1

Office
Twin State Gas & Electric Co.

Gas Tank

Flr. Gr. Elev. 464.54

S 45°-12'W

Steel Retaining Walls

S 40°-16'W

Plank sidewalk

32.46'

39.66'

8" Elm

8" Poplar

Board Walk

Cut Stone Wing

B.M. #3 (Orig. Survey)
Paint Spot
Elev. 577.08

S 0°-33'E

Revised Survey

Original Survey

Board Walk

St. J. & L.C.R.R.

P.C. 82+01.6

Orig. Survey P.I. 80+95.0

Face of G.D. Abut.

Revised Survey

Original Survey

Walk

Stone Wing

P.T. 84+00.2

Trainor House

Stone Wing

SLEEPER'S RIVER

Flow

F. Perrigo House

B.M. #4 (Orig. Survey)
Twin Poplar
Elev. 563.23

L.C. Stanhope House

(Revised)
Δ = 45°41'
D = 23°
R = 249.1'
T = 104.9
L = 198.6
E = 21.4'

BRIDGE STA. 84+70
SHEETS TO BE USED.
SHEET SERIES STR 20 NO. 35 SHEET
" " STR 20 NO. 50 SHEET
DETAILS OF FLOOR AND BALUSTRADE RAIL (2 SHEETS)
SUBSTRUCTURE DETAILS (4 SHEETS)
SHEET SERIES 58 110.2 TYPICAL DETAILS
" " 58 110.2A " "

ESTIMATED SUMMARY OF QUANTITIES

ITEM		
15	STRUCTURE EXCAVATION	360 CU YDS
" 36A	CONCRETE CLASS A (1-2-4)	202 " "
" 36B	" " B (1-2½-3½)	109 " "
" 36C	" " C (1-2-4)	324 " "
" 35	REINFORCING STEEL	64070 LBS
" 56	TIMBER PILING	3360 LIN. FT
"	BALUSTRADE RAIL	250 " "
"	LIGHTING SYSTEM	LUMP SUM
"	MAINTAINING TRAFFIC AND REMOVING SUPERSTRUCTURE PRESENT BRIDGE	LUMP SUM

THE MATERIAL IN THE SUPERSTRUCTURE OF THE PRESENT BRIDGE IS TO BECOME THE PROPERTY OF THE CONTRACTOR.

Sign

St. Johnsbury
BRO-1447(30)
Sheet 74 of 76
For Reference Only

B.M. #3 Paint Spot on cut stone wing left Sta 81+00 Elev. 577.08
B.M. #4 Twin Poplar Light Sta 86+20 Elev. 563.23

DETAIL OF SPECIAL CURVE

Sta. 82+25
7.5% V.C.
Elev. 578.50

Sta. 83+50
10.0% V.C.
Elev. 568.50

Sta. 86+25
Special Curve
Elev. 552.80

-0.55%

-8.00%

+1.15%

ELEV. BOTTOM FOOTING 542.94

ABUT. NO. 1

PIER NO. 1

PIER NO. 2

ABUT. NO. 2

BENT NO. 1

BENT NO. 2

BENT NO. 3

ELEV. BOTTOM FOOTING = 547.61

BOTTOM FOOTINGS Elev. 554

Water Level 570.0±

GROUND ELEV. 542

ELEV. 538 SILT

SAND

ELEV. 526 CLAY

ELEV. 525 FINE SAND

ELEV. 521 CLAYEY SAND

ELEV. 517

FINE SAND

BORING NO. 1

GROUND ELEV. 547

SOIL & ROCK 532

FINE TO COARSE SAND 530 to 525

FINE SAND

BORING NO. 2

Correct
W. D. Bishop
Bridge Engineer

ST JOHNSBURY

FRP 15-C

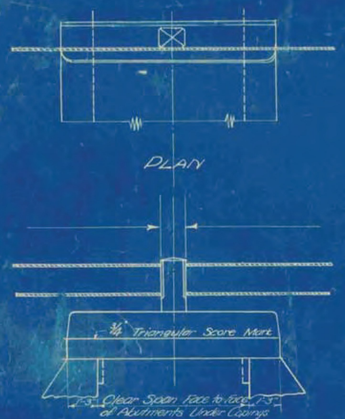

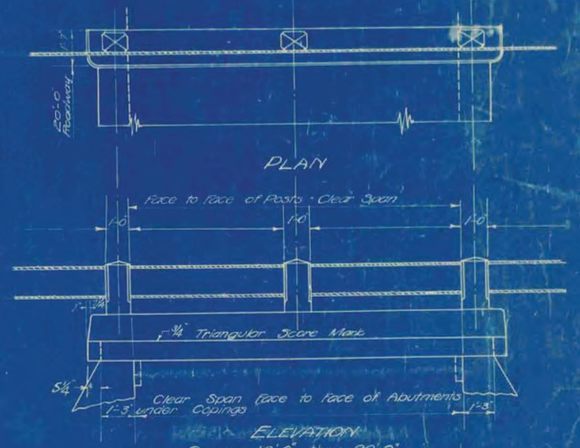

STEEL SCHEDULE

Clear Span	No. 408 Bars				No. 410 Bars				No. 403 Bars Extra Over Skew Spans	No. Head Bars Extra Over Square Spans	No. 404 Bars	No. 414 Bars ⅜" ø		No. 412 Bars ½" ø			Quantities for Square Bridges		Quantities for Skew Bridges	
	No.	Size	Length	Weight	No.	Size	Length	Weight	No.	No.	No.	No.	Length	No.	Curve	Length	No. Hook Bolts	No. Anch. Bolts	Cont. Rdwy. Steel, lbs	Conc. Abut. Wall Cu. Yds.	Cont. Rdwy. Steel, lbs	Conc. Abut. Wall Cu. Yds.
4'-0"	2	5'-8"	7'-8"	16	7	½"	22'-9"	6			25	2'-0"	12			5'-0"	6	4	55	830	5.3	830
5'-0"	2	6'-8"	8'-8"	18	8	½"	22'-9"	6			"	"	"			5'-0"	6	4	61	840	5.1	840
6'-0"	2	7'-8"	9'-8"	20	9	½"	22'-9"	6			"	"	"			5'-0"	8	4	70	980	5.9	980
7'-0"	10	6'-8"	10'-8"	22	10	½"	22'-9"	6			"	"	"			5'-0"	8	4	85	1110	6.4	1110
8'-0"	11	5'-8"	11'-8"	25	11	½"	22'-9"	6			"	"	"			5'-0"	8	4	102	1180	10.0	1180
9'-0"	10	6'-8"	12'-8"	27	12	½"	22'-9"	6			"	"	"			5'-0"	10	4	108	1360	10.9	1360
10'-0"	11	5'-8"	13'-8"	29	13	½"	22'-9"	6			"	"	"			5'-0"	10	4	128	1500	11.7	1570
11'-0"	12	6'-8"	14'-8"	31	14	½"	22'-9"	6			"	"	"			5'-0"	10	4	148	1600	14.7	1600
12'-0"	13	6'-8"	15'-8"	33	15	½"	22'-9"	6			"	"	"			5'-0"	12	4	162	1900	15.7	1900
13'-0"	14	5'-8"	16'-8"	35	16	½"	22'-9"	6			"	"	"			5'-0"	12	4	185	2000	18.	2000
14'-0"	14	6'-8"	17'-8"	37	17	½"	22'-9"	6			"	"	"			5'-0"	12	4	191	2200	19.1	2200
15'-0"	15	6'-8"	18'-8"	40	18	½"	22'-9"	6			"	"	"			5'-0"	14	4	221	2430	21.3	2430
16'-0"	16	6'-8"	19'-8"	42	19	½"	22'-9"	6			"	"	"			5'-0"	14	4	246	3110	24.5	3110
17'-0"	17	6'-8"	20'-8"	44	20	½"	22'-9"	6			"	"	"			5'-0"	14	4	274	3240	27.6	3240
18'-0"	17	7'-8"	21'-8"	46	21	½"	22'-9"	6			"	"	"			5'-0"	16	4	288	3530	28.6	3530
19'-0"	18	7'-8"	22'-8"	48	22	½"	22'-9"	6			"	"	"			5'-0"	16	4	316	3710	31.4	3720
20'-0"	19	7'-8"	23'-8"	51	23	½"	22'-9"	6			"	"	"			5'-0"	16	4	345	4110	34.4	4110

Check Spans to be Used

T = Slab thickness at Curb

QUANTITY ADDITIONS FOR SKEW SPANS
(To be added to quantities for square bridges)

SKEW	CONCRETE	STEEL
15°	None	144 lbs
30°	None	165 lbs
45°	None	200 lbs

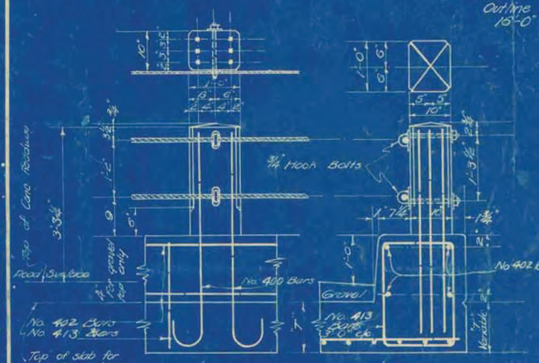

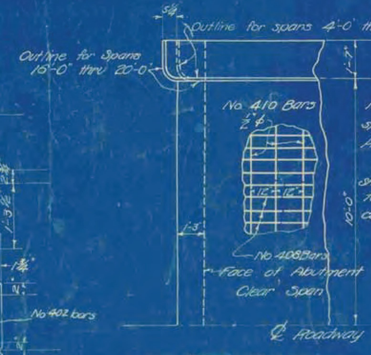

No. 404 Bars in skew spans shall be spaced 12" Ctrs. @ Rt. ∠s to ℄ of Roadway.

No. 410 Bars in skew spans shall be spaced @ Rt. ∠s to ℄ Roadway and cut to fit in field.

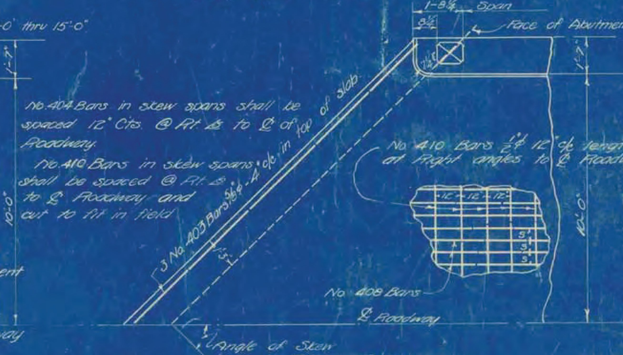

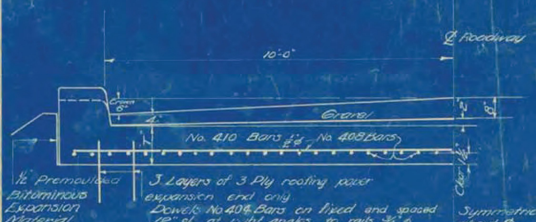

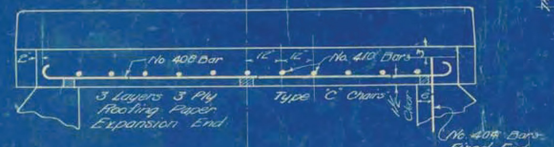

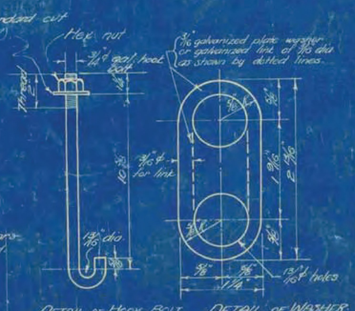

General Notes

The Correctness of this Steel Schedule is not guaranteed and no Claim will be allowed for any Inaccuracy therein.

All Steel to be deformed Bars. Reinforcing Steel shall conform to the Standard Specifications for Billet Steel Concrete Reinforcement Bars Intermediate or Structural Grade of the American Society for Testing Materials, Serial A-15-14.

All Bar Details Dimensions refer to ℄ of Steel.

All work and material shall conform to the Standard Road and Bridge Specifications for the State of Vermont 1926.

Slab to be Class A(1-2-4)

Concrete

Top surface to be screeded, floated and troweled when concrete wearing surface is used.

All concrete in Bridge shall be paid for as 1:2:4 Concrete.

Cable, including hardware, to be paid for under the unit price per foot of cable rail.

St. Johnsbury
BRO-1447(30)
Sheet 75 of 76
For Reference Only

STANDARD SLAB BRIDGES SPANS 4' TO 20'

20' ROADWAY, CABLE RAIL
DESIGNED FOR 2-15 TON TRUCKS
OR 100# PER SQ. FT.

CORRECT: P. D. Nichols
BRIDGE ENGINEER

Surveyed by
Designed by A.D.B.
Drawn by A.G.E. 4-26-28
Traced by A.G.E. 4-27-28
Checked by M. Ellsworth 5/5/28
Series 1920 No. CR Filed
Sheet of Sheets

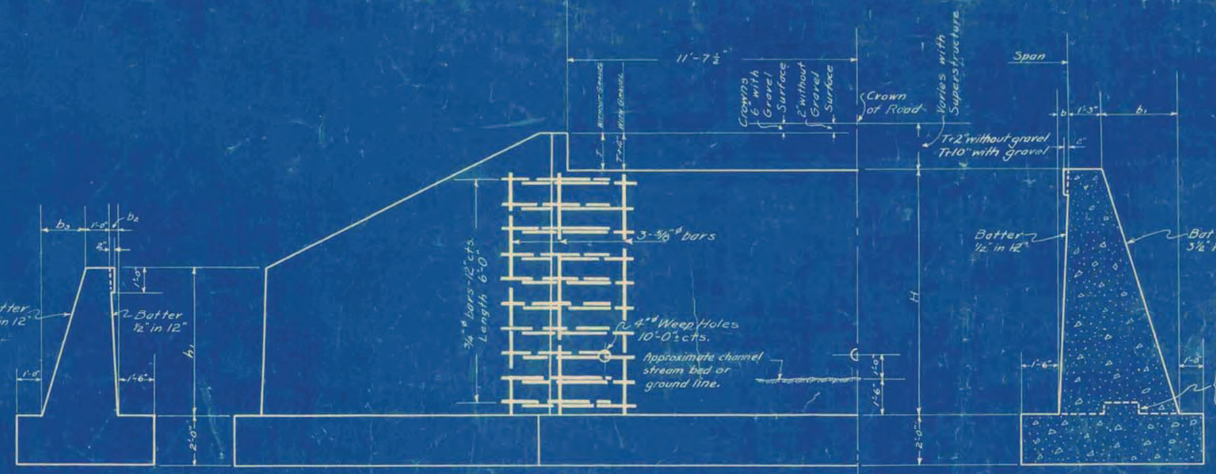

END VIEW WING — HALF ELEVATION — CROSS SECTION OF ABUTMENT

Dimensions and Quantities

Angle of Wings	H	b	b_1	With Gravel Surface: h_1	b_2	b_3	L	Concrete Cu. Yds.	Steel Lbs.	Without Gravel Surface: h_1	b_2	b_3	L	Concrete Cu. Yds.	Steel Lbs.
30°	4'-0"	2"	1'-2"	3'-0"	1⅜"	0'-10⅜"	5'-6"	21.0	166	2'-9"	1⅜"	0'-9½"	5'-0"	20.4	166
	6'-0"	3"	1'-9"	3'-0"	1⅝"	0'-10⅜"	8'-0"	33.1	251	2'-9"	1⅝"	0'-9⅜"	7'-6"	32.0	251
	8'-0"	4"	2'-4"	3'-9"	1¾"	0'-11⅝"	11'-0"	49.0	335	3'-0"	1¾"	0'-10⅜"	10'-0"	47.5	335
	10'-0"	5"	2'-11"	3'-9"	2"	1'-1"	13'-6"	68.8	420	3'-6"	1¾"	1'-0"	12'-6"	65.7	420
	12'-0"	6"	3'-6"	4'-3"	2⅛"	1'-3"	15'-0"	92.0	505	4'-0"	2"	1'-2"	14'-0"	90.0	505
	14'-0"	7"	4'-1"	4'-9"	2⅜"	1'-4⅝"	18'-0"	119.4	590	4'-6"	2⅛"	1'-4"	17'-0"	116.5	590
	16'-0"	8"	4'-8"	5'-0"	2½"	1'-5⅜"	20'-6"	153.1	675	4'-9"	2⅜"	1'-4⅝"	19'-6"	151.2	675
45°	4'-0"	2"	1'-2"	3'-3"	1⅜"	0'-11⅛"	6'-6"	22.4	166	3'-0"	1⅝"	0'-10⅜"	6'-0"	21.2	166
	6'-0"	3"	1'-9"	3'-9"	2"	1'-1"	9'-0"	35.3	251	3'-6"	1¾"	1'-0"	8'-6"	33.0	251
	8'-0"	4"	2'-4"	4'-6"	2⅛"	1'-4"	12'-6"	51.0	335	4'-3"	2⅛"	1'-3"	11'-6"	49.2	335
	10'-0"	5"	2'-11"	5'-3"	2⅜"	1'-6⅝"	15'-6"	72.0	420	5'-0"	2⅜"	1'-5⅜"	14'-6"	70.0	420
	12'-0"	6"	3'-6"	5'-9"	3"	1'-8"	18'-0"	97.3	505	5'-6"	2¾"	1'-7"	17'-0"	93.3	505
	14'-0"	7"	4'-1"	6'-6"	3⅛"	1'-11"	21'-0"	126.3	590	6'-3"	3⅛"	1'-10"	20'-0"	123.8	590
	16'-0"	8"	4'-8"	7'-3"	3⅜"	2'-1"	24'-0"	162.9	675	7'-0"	3⅝"	2'-0⅝"	23'-0"	160.0	675
60°	4'-0"	2"	1'-2"	3'-9"	2"	1'-1"	7'-0"	23.9	166	3'-6"	1¾"	1'-0"	6'-6"	22.8	166
	6'-0"	3"	1'-9"	4'-6"	2⅛"	1'-4"	10'-6"	36.8	251	4'-3"	2⅛"	1'-3"	10'-0"	36.6	251
	8'-0"	4"	2'-4"	5'-3"	2⅜"	1'-6⅝"	14'-0"	57.0	335	5'-0"	2⅜"	1'-5⅜"	13'-0"	54.1	335
	10'-0"	5"	2'-11"	6'-6"	3⅛"	1'-11"	17'-0"	80.0	420	6'-3"	3⅛"	1'-10"	16'-0"	78.0	420
	12'-0"	6"	3'-6"	7'-6"	3⅝"	2'-2"	20'-6"	109.3	505	7'-3"	3⅝"	2'-1"	19'-6"	105.7	505
	14'-0"	7"	4'-1"	8'-3"	4⅛"	2'-5"	24'-0"	143.3	590	8'-0"	4"	2'-4"	23'-0"	141.3	590
	16'-0"	8"	4'-8"	9'-3"	4⅝"	2'-8½"	27'-0"	183.9	675	9'-0"	4½"	2'-7½"	26'-0"	182.0	675

General Notes

Class "B" (1:2½:5) Concrete shall be used thruout in abutment, unless otherwise specified.
All exposed edges shall be chamfered, face dimension of chamfer shall be 1".
Expansion materials are shown on superstructure sheet.
All work and materials shall conform to the Standard Road and Bridge Specifications of the Vermont Highway Dept. (1926).
Exact length, angle and height of wings to be determined by the Engineer.
Footings may be stepped when necessary with the approval of the Engineer.
The lengths, heights, and batters of wings, and quantities are given for 30°, 45°, and 60° degree wings retaining a fill standing on 1½:1 slope.
All reinforcing steel shall be deformed bars of structural or intermediate grade, and shall conform to the Standard Specifications for Billet-Steel Concrete Reinforcement Bars of the American Society For Testing Materials, Serial Designation, A-15-14.
Reference:
For general arrangement and typical details see sheet 30.

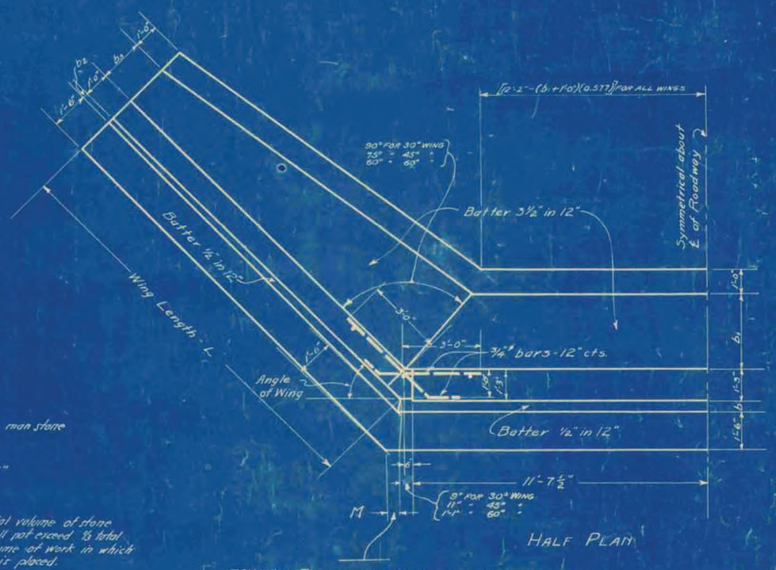

M (in inches) = $[(L+\frac{1}{2}K)+18]$ 0.268 FOR 30° ANGLE OF WING
$[(L+\frac{1}{2}K)+19]$ 0.417 FOR 45° " "
$[(L+\frac{1}{2}K)+18]$ 0.577 FOR 60° " "
(H AND K IN FEET) WITH GRAVEL K = T+0.33
WITHOUT GRAVEL K = T
Where T is expressed in feet

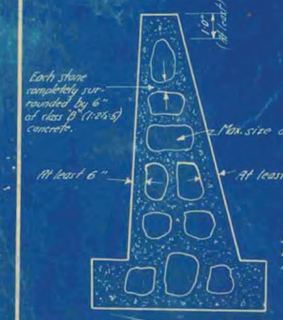

CROSS SECTION OF ABUTMENT
SHOWING TYPICAL CYCLOPEAN CONSTRUCTION
(To be used only when called for by contract and plans.)

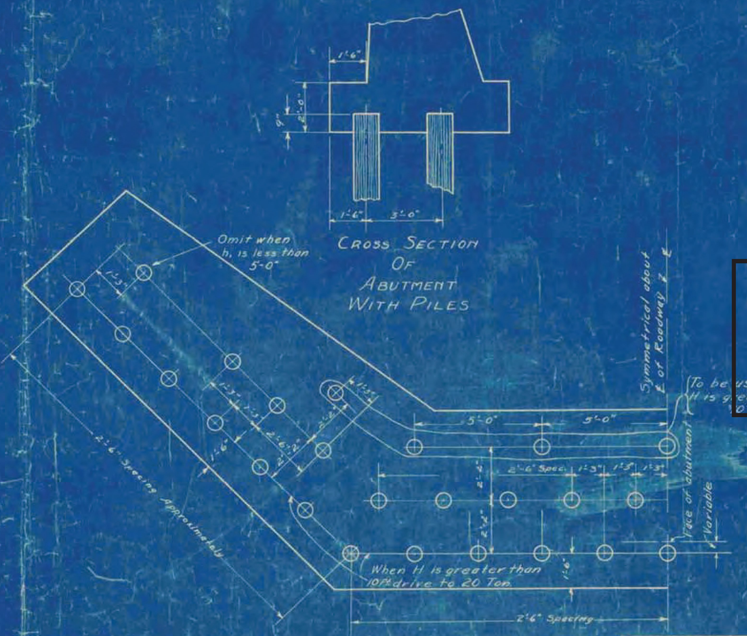

CROSS SECTION OF ABUTMENT WITH PILES

Pile-spacing when piles are Required Engineer to vary spacing when necessary.

STANDARD GRAVITY ABUTMENTS FOR SLAB BRIDGES

S.L.A.G.- Square

Correct: A. D. Bishop — Bridge Engineer

Surveyed by
Designed by
Drawn by
Traced by E. Guy Norton 4-23-28
Checked by M. K. Wordruff 5/7/28.
Series S.L.A.G. No. Square Filed
Sheet of Sheets

St. Johnsbury
BRO-1447(30)
Sheet 76 of 76
For Reference only

CONCRETE GENERAL NOTES

1. ALL EXPOSED EDGES OF CONCRETE SHALL BE CHAMFERED 1" x 1"
2. REINFORCING STEEL SIZE AND SPACING SHOWN IN THE PLANS IS BASED ON 60 KSI STEEL, UNLESS NOTED OTHERWISE. WITH THE ENGINEER'S PERMISSION, BAR SIZE AND SPACING MAY BE MODIFIED ACCORDING TO THE LATEST AASHTO LRFD BRIDGE DESIGN SPECIFICATION AND STRUCTURES DESIGN MANUAL WHEN USING HIGHER STRENGTH STEEL.

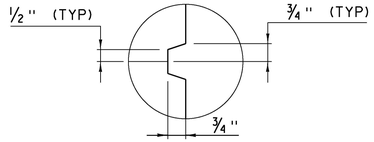

SCORE MARK DETAIL
(NOT TO SCALE)

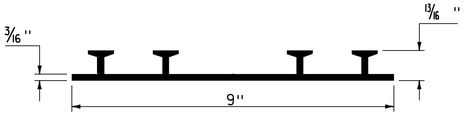

P.V.C. WATERSTOP FOR CONSTRUCTION JOINTS
(NOT TO SCALE)

PAYMENT FOR THE P.V.C. WATERSTOP SHALL BE INCIDENTAL TO THE UNIT BID PRICE FOR THE ADJACENT CONCRETE.

OTHER CONFIGURATIONS OF WATERSTOP MAY BE USED UPON APPROVAL OF THE ENGINEER.

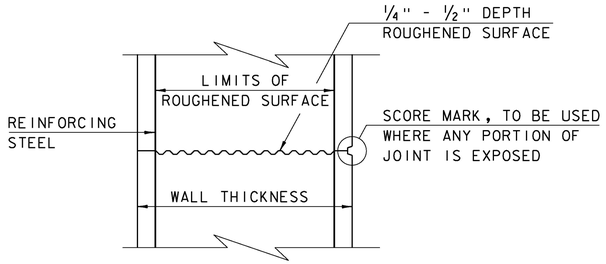

TYPICAL HORIZONTAL CONSTRUCTION JOINT
(NOT TO SCALE)

1. THE SURFACE OF THE CONCRETE CONSTRUCTION JOINTS SHALL BE CLEANED AND FREE OF LAITANCE.
2. IMMEDIATELY BEFORE NEW CONCRETE IS PLACED, ALL CONSTRUCTION JOINTS SHALL BE WETTED AND STANDING WATER REMOVED.

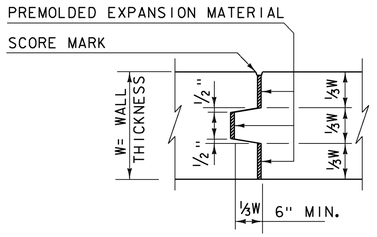

TYPICAL CONCRETE EXPANSION JOINT
(NOT TO SCALE)

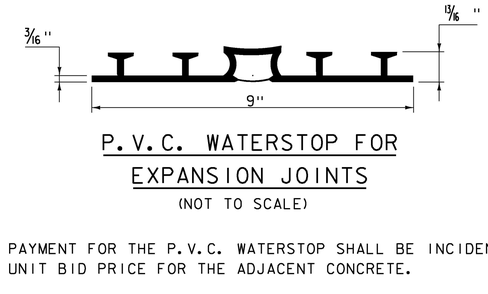

P.V.C. WATERSTOP FOR EXPANSION JOINTS
(NOT TO SCALE)

PAYMENT FOR THE P.V.C. WATERSTOP SHALL BE INCIDENTAL TO THE UNIT BID PRICE FOR THE ADJACENT CONCRETE.

OTHER CONFIGURATIONS OF WATERSTOP MAY BE USED UPON APPROVAL OF THE ENGINEER.

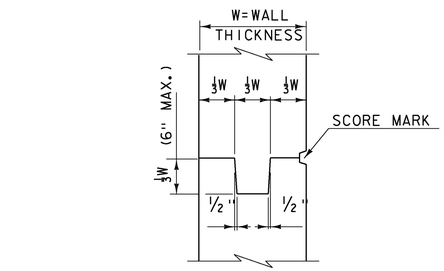

TYPICAL CONCRETE CONSTRUCTION JOINT
(NOT TO SCALE)

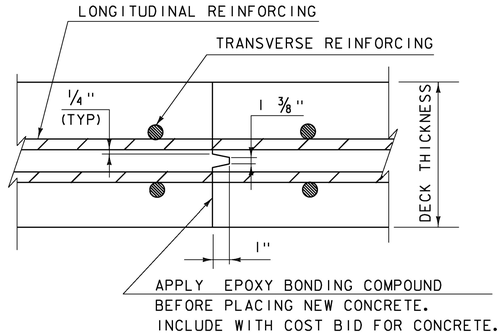

TRANSVERSE BRIDGE SLAB CONSTRUCTION JOINT DETAILS
(NOT TO SCALE)

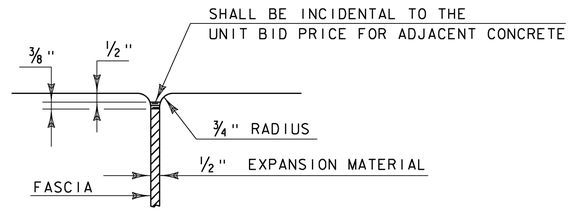

JOINT BETWEEN FASCIA AND WINGWALL
(NOT TO SCALE)

REVISIONS	
MAY 7, 2010	APPROVED FOR USE BY VAOT STRUCTURES SECTION
FEBRUARY 9, 2012	REBAR SUBSTITUTION ALLOWANCE ADDED TO CONCRETE GENERAL NOTES.

CONCRETE DETAILS AND NOTES

VERMONT AGENCY OF TRANSPORTATION
STRUCTURES - SECTION

STRUCTURES DETAIL
SD-501.00

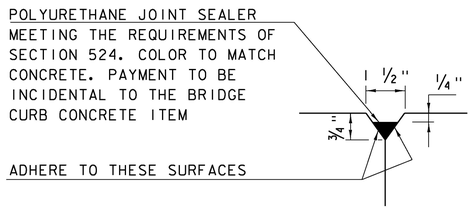

DETAIL "B"
(NOT TO SCALE)

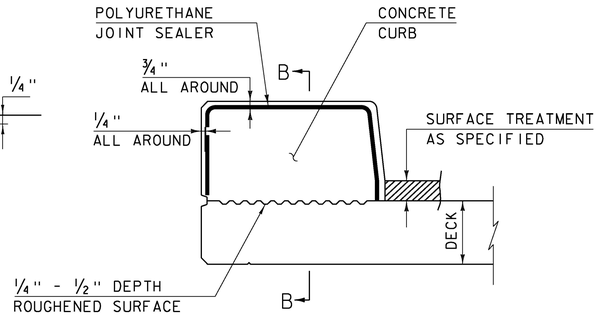

CONCRETE CURB JOINT SECTION
(NOT TO SCALE)

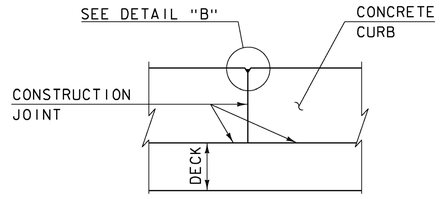

SECTION B - B
(NOT TO SCALE)

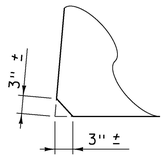

ACUTE ANGLE CLIP DETAIL
(NOT TO SCALE)

1. SEE TYPICAL HORIZONTAL CONSTRUCTION JOINT DETAIL FOR ADDITIONAL INFORMATION

CONCRETE CURB JOINT NOTES

1. CONCRETE CURBS MAY BE PLACED IN ONE CONTINUOUS OPERATION IF AN APPROVED SHRINKAGE REDUCING ADMIXTURE LISTED IN THE SPECIAL PROVISIONS IS USED WITH THE CONCRETE MIX DESIGN. PAYMENT FOR THE SHRINKAGE REDUCING ADMIXTURE WILL BE INCIDENTAL TO THE BRIDGE CURB CONCRETE ITEM.

2. IF THE CONTRACTOR CHOOSES NOT TO USE AN APPROVED SHRINKAGE REDUCING ADMIXTURE, THE CURBS SHALL BE CONSTRUCTED WITH CONSTRUCTION JOINTS SPACED AT A MAXIMUM OF 15'-0" CENTER TO CENTER AND 2'-0" MINIMUM FROM THE CENTER OF NEAREST BRIDGE RAILING POST.

3. ON MULTI-SPAN CONTINUOUS SUPERSTRUCTURES, REGARDLESS OF WHETHER APPROVED SHRINKAGE REDUCING ADMIXTURE IS USED, CURB JOINTS SHALL BE LOCATED OVER THE CENTERLINE OF PIERS AND 7'-0" EACH SIDE OF THE CENTERLINE OF EACH PIER.

4. WHEN CURB JOINTS ARE USED THE CURBS SHALL BE PLACED IN ALTERNATE SECTIONS WITH A MINIMUM OF 48 HOUR DELAY BETWEEN ADJACENT PLACEMENTS.

5. LONGITUDINAL REINFORCING SHALL BE CONTINUOUS THROUGH CURB CONSTRUCTION JOINTS. CURB STIRRUP BARS SHALL BE TURNED AS NECESSARY TO MAINTAIN COVER IN THE FLARED CURB ENDS.

6. THE JOINT SPACING AND DETAILS SHOWN SHALL APPLY TO SIDEWALKS WHEN SHOWN IN THE PLANS.

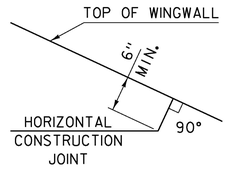

HORIZONTAL WINGWALL CONSTRUCTION JOINT
(NOT TO SCALE)

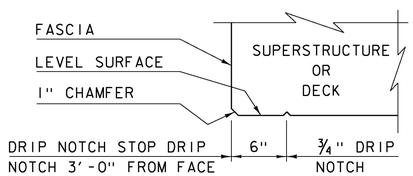

DRIP NOTCH DETAIL
(NOT TO SCALE)

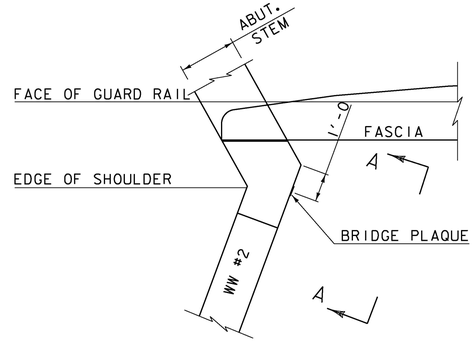

PLAN

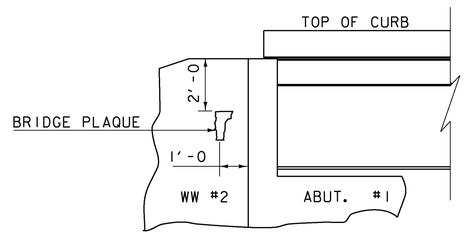

VIEW "A - A"

BRIDGE PLAQUE
(NOT TO SCALE)

THE BRIDGE PLAQUE WILL BE SUPPLIED BY THE AGENCY OF TRANSPORTATION AND SHALL BE INSTALLED BY THE CONTRACTOR AT ABUTMENT #1 ON THE RIGHT SIDE AS SHOWN OR AS DIRECTED BY THE ENGINEER.

PAYMENT FOR INSTALLATION OF THE BRIDGE PLAQUE SHALL BE INCIDENTAL TO THE ADJACENT CONCRETE.

REVISIONS	
MAY 7, 2010	APPROVED FOR USE BY VAOT STRUCTURES SECTION
JUNE 4, 2010	MODIFIED AND ADDED TWO DETAILS
OCTOBER 10, 2012	MODIFIED HORZ. JOINT WINGWALL ADD 6" MIN. DIMENSION

CONCRETE DETAILS AND NOTES

VERMONT AGENCY OF TRANSPORTATION
STRUCTURES - SECTION

STRUCTURES DETAIL
SD-502.00

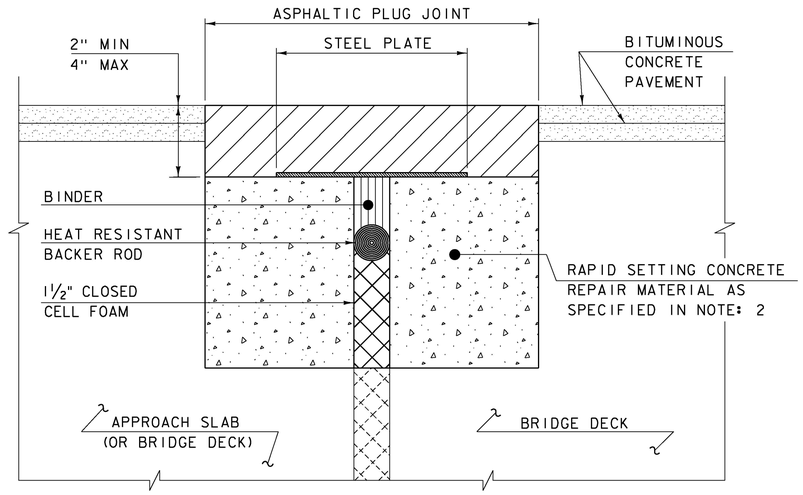

ASPHALTIC PLUG JOINT DETAIL - REHAB

NOTES:

1. THE CONTRACTOR SHALL REMOVE ALL ASPHALTIC PLUG JOINT MATERIAL AND DETERIORATED CONCRETE AS DIRECTED BY THE ENGINEER. REMOVAL OF THE FIRST 4 INCHES OF MATERIAL SHALL BE INCLUDED IN THE BID PRICE FOR ITEM 516.10 BRIDGE EXPANSION JOINT, ASPHALTIC PLUG. ANY REMOVAL OF MATERIAL GREATER THAN 4 INCHES SHALL BE INCLUDED IN THE BID PRICE OF ITEM 580.20 RAPID SETTING CONCRETE REPAIR MATERIAL WITH COARSE AGGREGATE.

2. THE CONTRACTOR SHALL REPLACE REMOVED MATERIAL THAT IS LESS THAN 4" FROM FINISHED GRADE WITH ASPHALTIC PLUG JOINT MATERIAL MEETING THE REQUIREMENTS OF SUBSECTION 707.15. ALL REMOVED MATERIAL THAT IS GREATER THAN 4 INCHES FROM FINISHED GRADE SHALL BE REPLACED WITH RAPID SETTING CONCRETE REPAIR MATERIAL WITH COARSE AGGREGATE MEETING THE REQUIREMENTS OF SUBSECTION 780.04.

3. REINFORCING STEEL NOT SHOWN FOR CLARITY.

4. PLACE 1/4" THICK BY 8" WIDE SECTIONS OF STEEL PLATE OVER THE CENTER OF THE MOVEMENT GAP. SECURE THE PLATES FROM MOVING BY INSERTING LOCATING PINS THROUGH THE PRE-STAMPED HOLES INTO BACKER ROD AND COVER WITH HOT BINDER. THE STEEL PLATES MAY BE OMITTED WHERE THE ENGINEER DETERMINES THAT THE APPROACH SLAB OR BRIDGE DECK WILL PROVIDE INADEQUATE SUPPORT AND WHERE VERTICAL MOVEMENT OF THE PLATES MIGHT OCCUR.

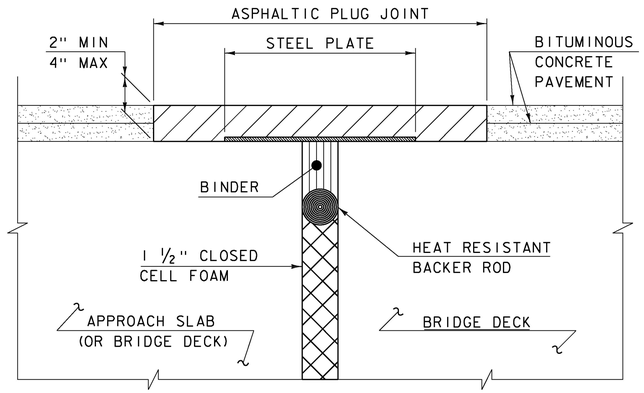

ASPHALTIC PLUG JOINT DETAIL "A" - NEW

NOTE:
PLACE 1/4" THICK BY 8" WIDE SECTIONS OF STEEL PLATE OVER THE CENTER OF THE MOVEMENT GAP. SECURE THE PLATES FROM MOVING BY INSERTING LOCATING PINS THROUGH THE PRE-STAMPED HOLES INTO BACKER ROD AND COVER WITH HOT BINDER.

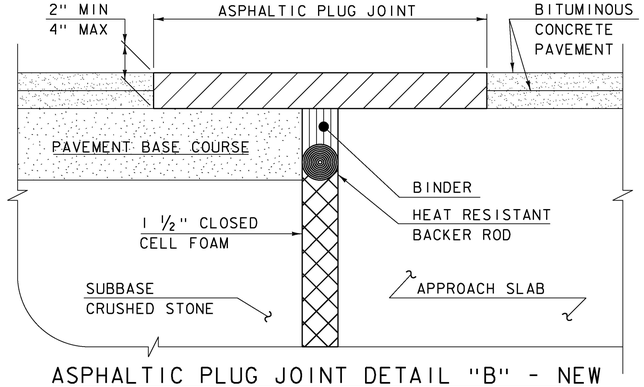

ASPHALTIC PLUG JOINT DETAIL "B" - NEW

ASPHALTIC PLUG JOINT NOTES

INSTALLATION:

1. LOCATE THE JOINT CENTRALLY OVER THE DECK OVERLAY EXPANSION GAP OR FIXED JOINT, MARKED OUT TO THE MANUFACTURER'S RECOMMENDED WIDTH.
2. REMOVE THE BITUMINOUS CONCRETE PAVEMENT FULL DEPTH AS SHOWN ON THE PLANS. THE PAVEMENT SHALL BE DRY AND SAW CUT TO THE LIMITS REQUIRED TO PLACE THE JOINT. A PNEUMATIC HAMMER AND CHISEL MAY BE USED ADJACENT TO THE CURB ONLY WHEN SAW CUTTING IS NOT POSSIBLE.
3. BLAST CLEAN THE JOINT AREA OF DEBRIS, ASPHALT AND SHEET MEMBRANE. THOROUGHLY DRY THE JOINT AREA WITH COMPRESSED AIR PRIOR TO APPLYING BINDER MATERIAL.
4. PLACE PROPERLY SIZED HEAT RESISTANT BACKER ROD IN THE MOVEMENT GAP ALLOWING FOR 1" +/- OF BINDER ABOVE THE ROD.
5. HEAT AND PLACE THE BINDER MATERIAL AS RECOMMENDED BY THE MANUFACTURER.
6. IMMEDIATELY AFTER TOP COATING, CAST AN ANTI-SKID MATERIAL OVER THE JOINT TO REDUCE THE RISK OF TRACKING.

WEATHER LIMITATIONS

APPLY BINDER MATERIAL ONLY WHEN THE FOLLOWING CONDITIONS PREVAIL OR AS RECOMMENDED BY THE MANUFACTURER:

1. THE AMBIENT AIR TEMPERATURE IS AT LEAST 10 DEG C (50 DEG F) AND RISING.
2. THE ROAD SURFACE IS DRY.
3. WEATHER CONDITIONS OR OTHER CONDITIONS ARE FAVORABLE AND ARE EXPECTED TO REMAIN SO FOR THE PERFORMANCE OF SATISFACTORY WORK.

DETAILS ON THIS SHEET ARE NOT TO SCALE.

REVISIONS	
MAY 7, 2010	APPROVED FOR USE BY VAOT STRUCTURES SECTION
AUGUST 29, 2011	ADD DETAIL "B" AND REV. NOTES

BRIDGE JOINT
ASPHALTIC PLUG

VERMONT AGENCY OF TRANSPORTATION
STRUCTURES - DIVISION

STRUCTURES DETAIL
SD-516.10

STRUCTURAL STEEL GENERAL NOTES:

1. ALL FIELD CONNECTIONS SHALL BE MADE WITH 7/8" DIAMETER HIGH-STRENGTH BOLTS IN 15/16" DIAMETER HOLES, PER SUBSECTION 506.19, UNLESS OTHERWISE SPECIFIED.
2. ALL HOLES IN THE WEBS OF THE FASCIA GIRDERS THAT ARE NOT OTHERWISE FILLED, SHALL BE FILLED WITH EITHER BUTTON HEAD OR HEX HEAD BOLTS. THESE BOLTS SHALL BE TIGHTENED IN ACCORDANCE WITH SUBSECTION 506.19.
3. ALL WELDING SHALL CONFORM TO THE PROVISIONS OF SUBSECTION 506.10.
4. ANY CONNECTIONS THAT ARE NOT DETAILED ON THE PLANS SHALL BE DETAILED BY THE FABRICATOR AND SUBMITTED TO THE STRUCTURES ENGINEER FOR APPROVAL.
5. STRUCTURAL STEEL MEMBERS DESIGNATED "CVN" IN THE PLANS SHALL BE CHARPY V-NOTCH TESTED IN ACCORDANCE WITH SUBSECTION 714.01 OF THE STANDARD SPECIFICATIONS.
6. ENDS OF GIRDERS ARE TO BE VERTICAL IN THEIR FINAL POSITION.
7. AFTER SUPERSTRUCTURE STEEL HAS BEEN ERECTED, ELEVATIONS ALONG THE TOP OF THE GIRDERS SHALL BE TAKEN AS DIRECTED BY THE RESIDENT ENGINEER FOR USE IN DETERMINING FINISHED GRADES.

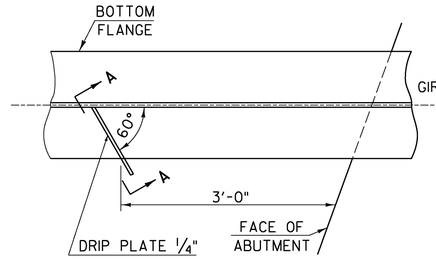

PLAN DRIP PLATE

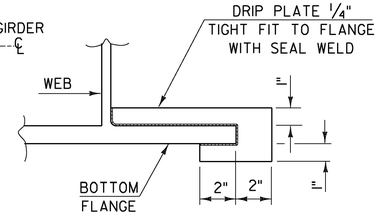

SECTION A - A

NOTE: DRIP PLATES SHALL BE PLACED ON OUTSIDE EDGE OF FASCIA GIRDERS ON THE HIGH SIDE OF ALL PIERS AND ABUTMENTS OR AS INDICATED ON PROJECT PLANS.

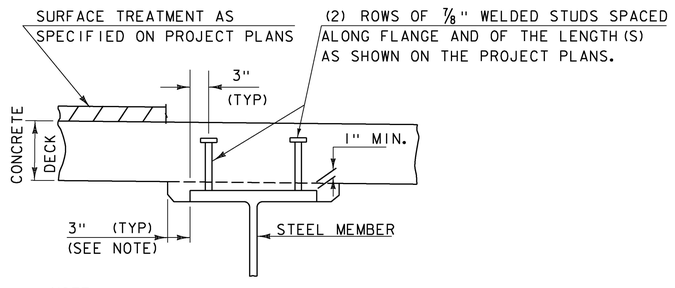

NOTE:
THE 3" HORIZONTAL SECTION MAY BE ELIMINATED FOR FORMING SYSTEMS DESIGNED FOR THE CONSTRUCTION OF VERTICAL HAUNCHES. ANY VOIDS RESULTING FROM FORMING SYSTEM ELEMENTS SHALL BE FILLED WITH JOINT SEALER, POLYURETHANE MEETING THE REQUIREMENTS OF SECTION 524. THE COST OF THE JOINT SEALER, POLYURETHANE SHALL BE INCIDENTAL TO THE ADJACENT CONCRETE.

HAUNCH AND SHEAR CONNECTOR DETAIL

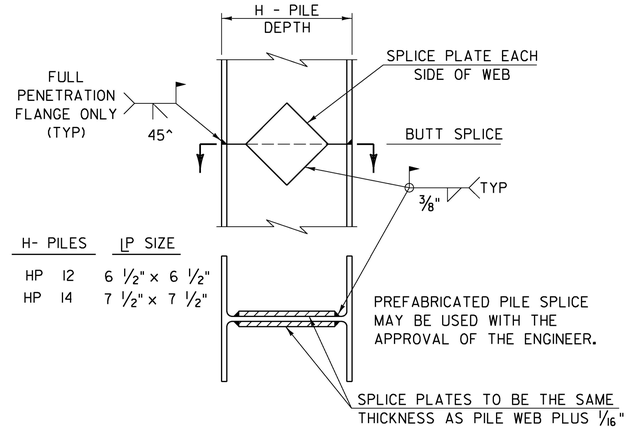

DETAIL OF PILE SPLICE

DETAILS ON THIS SHEET ARE "NOT TO SCALE" UNLESS NOTED OTHERWISE.

REVISIONS	
MAY 7, 2010	APPROVED FOR USE BY VAOT STRUCTURES SECTION
JUNE 4, 2010	MODIFIED NOTES

STRUCTURAL STEEL DETAILS & NOTES

VERMONT AGENCY OF TRANSPORTATION
STRUCTURES - SECTION

STRUCTURES DETAIL
SD-601.00

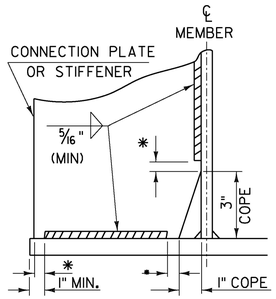

WELD TERMINATION AND COPING DETAILS FOR STEEL MEMBERS

*NO WELD FOR 3/8" MIN. 7/8" MAX. (EXCEPT MUST MAINTAIN 1" MINIMUM FROM EDGE OF FLANGE)

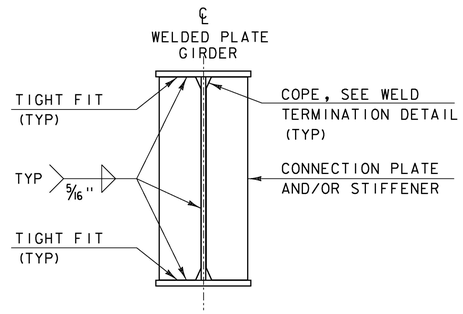

INTERMEDIATE CONNECTION PLATES AND/OR STIFFENERS FOR WELDED PLATE GIRDERS

INTERMEDIATE DETAIL IS ONLY USED WHEN PLATE DOES NOT OCCUR AT AN ABUTMENT OR PIER.

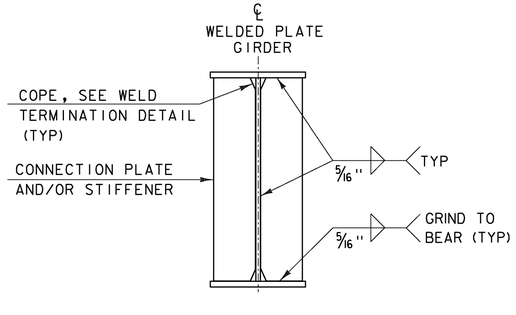

ABUTMENT BEARING STIFFENERS AND/OR CONNECTION PLATES FOR WELDED PLATE GIRDERS

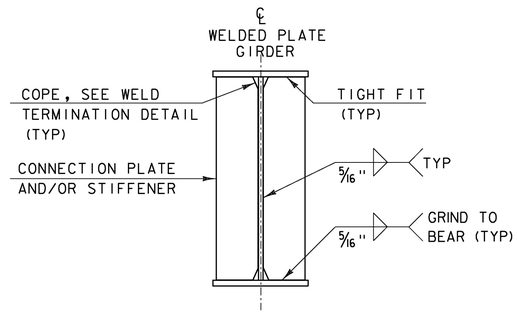

PIER BEARING STIFFENERS AND/OR CONNECTION PLATES FOR WELDED PLATE GIRDERS

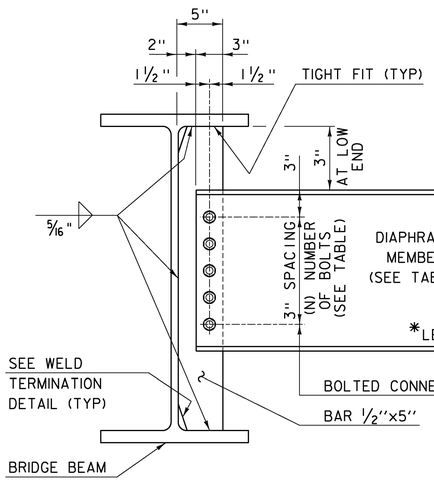

DEPTH		DIAPHRAGM MEMBER	(N) BOLTS
ROLLED BEAM	24" 30"	C15x33.9	4
	31" 36"	MC18x42.7	5
	37" 42"	W21x44	6
PLATE GIRDER WEB	31" 36"	W27x84	7
	37" 42"	W33x118	9
	43" 48"	W36x135	10

INTERMEDIATE DIAPHRAGMS FOR 24" TO 48" BRIDGE BEAMS

*IF CLEARANCE CANNOT BE MET, DIAPHRAGM MAY BE SLOPED.

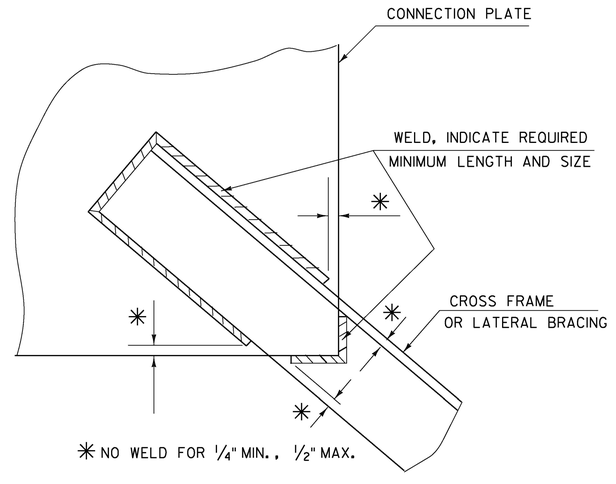

WELD LOCATION DETAIL AT CROSS FRAMES AND LATERAL BRACING

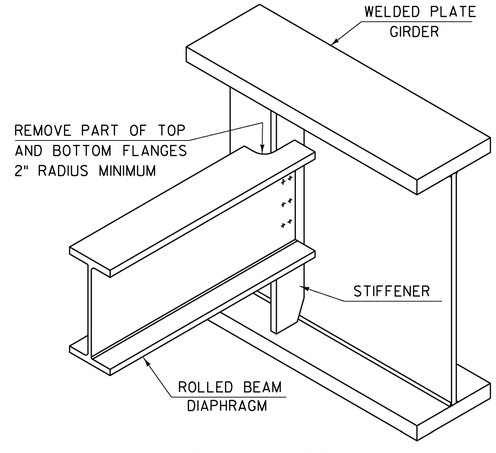

SEE CONTRACT DRAWINGS FOR SIZES OF MEMBERS AND CONNECTION DETAILS

ROLLED BEAM USED AS DIAPHRAGM

DETAILS ON THIS SHEET ARE "NOT TO SCALE" UNLESS NOTED OTHERWISE.

REVISIONS	
MAY 7, 2010	APPROVED FOR USE BY VAOT STRUCTURES SECTION
MAY 2, 2011	ADD INTERMEDIATE DIAPHRAGMS DETAIL & ADD NOT TO SCALE NOTE

STRUCTURAL STEEL PLATE GIRDER DETAILS AND NOTES

VERMONT AGENCY OF TRANSPORTATION
STRUCTURES - SECTION

STRUCTURES DETAIL
SD-602.00