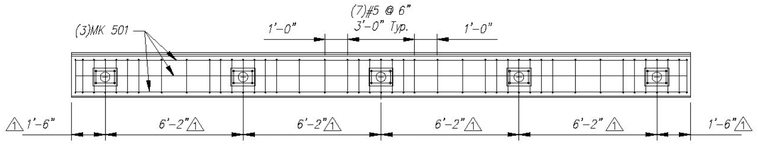

PLAN VIEW
HEADWALL REINFORCING DETAIL

Scale: 1/4" = 1'-0"

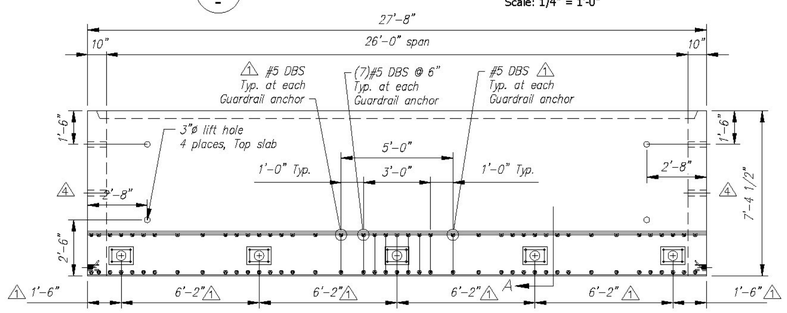

PLAN VIEW

Scale: 1/4" = 1'-0"

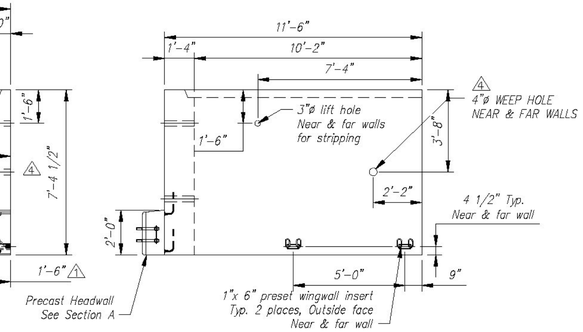

R. SIDE ELEVATION

Scale: 1/4" = 1'-0"

C3 - BILL OF MATERIALS / EMBEDS				
CSI ID#	DESCRIPTION	QTY	UM	COMMENTS
4 DTJ	CERTI-VEX PENSEAL 244-40%	1.30	GA	
EM-0005A	1" X 6 " PRESET WING INSERTS	4	EA	
EM-00033	3" FOAM CORE PVC	7	FT	
JS-00002	1"X1"CLOSED NEOP GASKET	49	FT	AROUND BELL
5 DTJ	DBSAE #5 Z-BAR GR 60 VTAOT LEVEL II	86	EA	DOWEL BAR SPLICER
DTJ	REBAR #4 Z-BAR GR 60 VTAOT LEVEL II	784	LB	
DTJ	REBAR #5 Z-BAR GR 60 VTAOT LEVEL II	57	LB	
DTJ	REBAR #7 Z-BAR GR 60 VTAOT LEVEL II	2539	LB	
MX-FA5000SC30	MIX DESIGN - FLY ASH 5000 SELF CONSOLIDATING	14.72	CY	
C3 HEADWALL - BILL OF MATERIALS / EMBEDS				
DTJ	GUARDRAIL ANCHOR	5	EA	SUPPLIED BY OTHERS
5 DTJ	DI #5 X 28" Z-BAR GR 60 VTAOT LEVEL II	86	EA	DOWEL IN
6 DTJ	REBAR #5 Z-BAR GR 60 VTAOT LEVEL II	228	LB	
MX-FA5000SC30	MIX DESIGN - FLY ASH 5000 SELF CONSOLIDATING	1.78	CY	

C3 Culvert Rebar Schedule			
MK		QTY	LENGTH
401	#4	18	10 '- 6 "
402	#4	9	27 '- 0 "
403	#4	104	7 '- 1.5 "
501	#5	2	27 '- 4 "
701	#7	36	18 '- 0 "
702	#7	22	27 '- 0 "

C3 HW Rebar Schedule			
MK		QTY	LENGTH
501	#5	3	27 '- 4 "
6 502	#5	43	3 '- 2 "

QUANTITY = 1
WEIGHT = 33.41 TONS

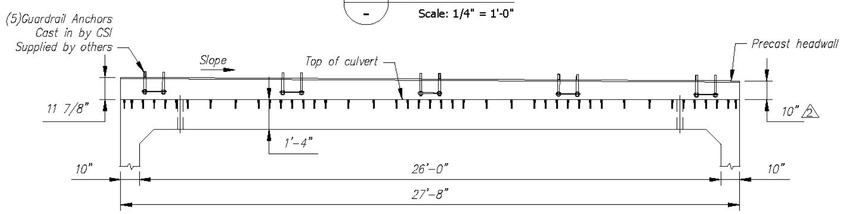

PARTIAL ELEVATION

Scale: 1/4" = 1'-0"

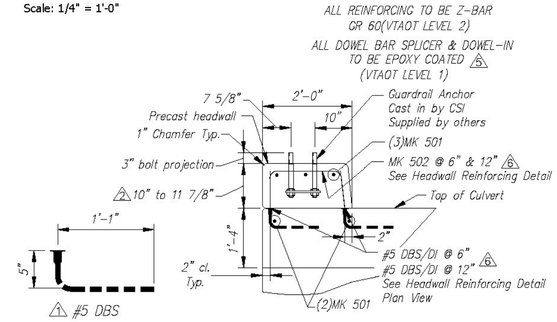

SECTION A

Scale: N.T.S.

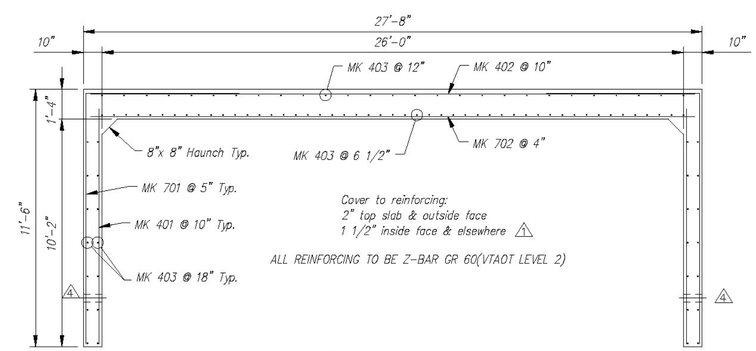

REINFORCING DETAIL

Scale: N.T.S.

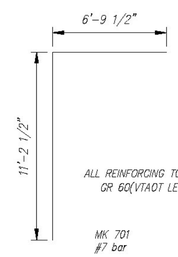

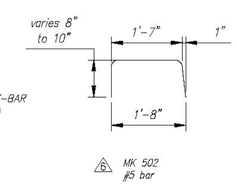

BENDING SCHEDULE

Scale: N.T.S.

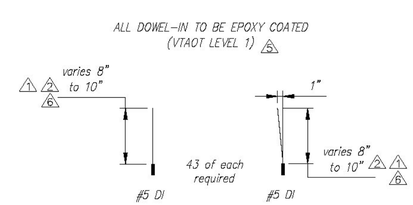

HEADWALL BENDING SCHEDULE

Scale: N.T.S.

Rev.	Date	DESCRIPTION	By
10			
9			
8			
7	21JUL2015	SHORTENED DI & ADDED REBAR TO HW TO EASE MFG	RY
6	08JUL2015	ALL DBS/DI WERE Z-BAR, NOW EPOXY COATED	RY
5	17JUN2015	REVISED PER CUSTOMER REVIEW	BSS
4	10JUN2015	ADJUSTED WATER REPELLENT	RY
3	28MAY2015	10" DIM WAS 9 1/2", HDWALL BEND SCHED – 8" WAS 7 1/2"	RY
2	14MAY2015	REVISED PER CUSTOMER REVIEW, REVISED GUARDRAIL ANCHOR SPACING, MOVED WINGWALL ANCHOR, ADDED NOTE	RY
1			RY

REVISIONS

Contractor is to verify that all information shown on drawings has been thoroughly checked and complied with. The contract documents are adequate to meet the field conditions. Some dimensions and details may differ slightly from contract drawings to accommodate the manufacturing or design process. Approval of this drawing indicates that any deviation from the contract documents has been reviewed and found to be acceptable. Production will not commence until receipt of signed, approved shop drawings.

This drawing contains information proprietary to CONCRETE SYSTEMS, INC. This drawing is disclosed with the understanding that it will be retained in confidence and its use limited solely to the purpose for which it is disclosed. It is understood that no reproduction of this drawing is authorized without permission from CONCRETE SYSTEMS, INC. and that it will be returned to CONCRETE SYSTEMS, INC. upon request.

owing documents and/or sources:

E PROJECT, TOWN OF RICHFORD

TED 2011

Concrete Systems Inc.
9 Commercial St., Hudson, NH,03051
Phone 603-889-4163
Fax 603-889-2417

STATE AGENCY
VTrans

Drawn By R. YEAGER	Date 16APR2015	G.W. TATRO CONSTRUCTION, INC. VT/AOT BRIDGE REPLACEMENT– ROAD IMPROVEMENT RICHFORD, VT.	
Reviewed By	Date	C Drawing No. SHOP DRAWING C3 C22312-C3	REV 6
Approved By C VICK	Date 7/21/15	Quantity: 1 Project No: BRF030229	SHEET 3 OF 14

Vermont Agency of Transportation
RECEIVED
Richford Precast Frame Complete Updated Submittal_Approved 7.23.15.pdf
CK'D BY CLB OK'D BY HIS
July 22, 2015
RESUBMIT NO Approved
BY C. CARLSON DATE 07/23/15