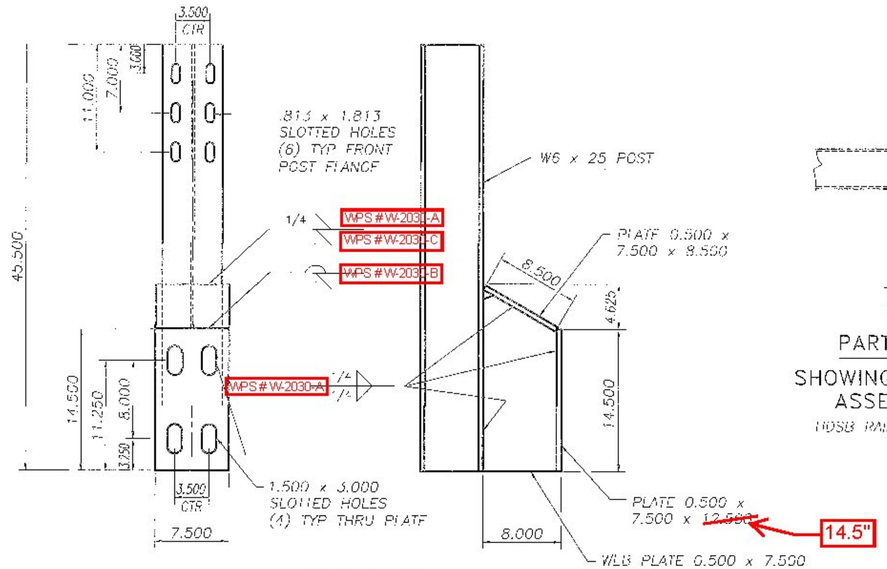


POST DETAIL

TYPICAL ALL FASCIA POSTS

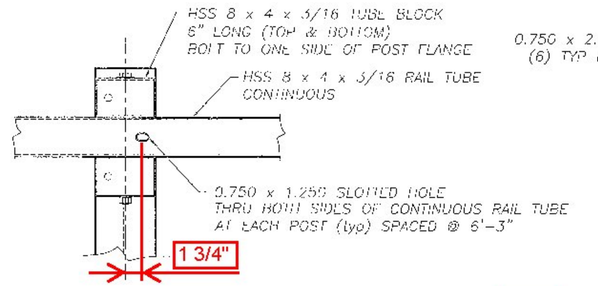


PARTIAL ELEVATION

SHOWING RAIL AND BLOCK ASSEMBLY TO POST

HDSB RAIL NOT SHOWN FOR CLARITY

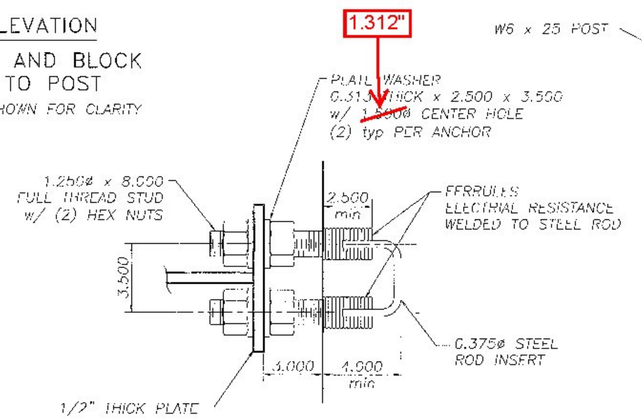


TYPE B ANCHOR ASSEMBLY

(1) PER POST

(BY OTHERS)

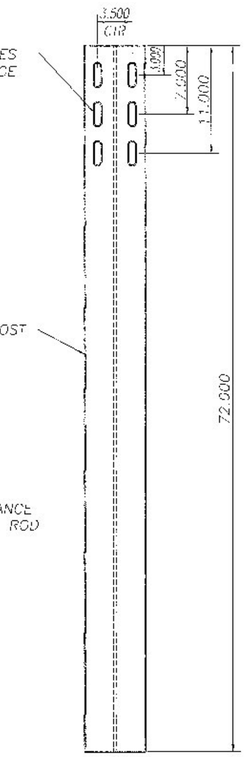


POST ELEVATION

DRIVEN POST #1

## NOTES

1. ALL WORK AND MATERIALS SHALL CONFORM TO SECTION 525
2. TYPE B ANCHOR INSERTS OF A DIFFERENT TYPE MAY BE PROVIDED, IF APPROVED BY THE ENGINEER
3. PRIOR TO GALVANIZING THE ASSEMBLED POST, GRIND ALL EDGES TO A MINIMUM 1/16" RADIUS
4. ALL POSTS SHALL BE SET NORMAL TO GRADE
5. SPLICES FOR THE STEEL BEAM GUARDRAIL SHALL LAP IN THE DIRECTION OF TRAFFIC
6. A RAILING JOINT SPLICE SHALL BE PROVIDED IN ANY RAIL BAY SPANNING THE END OF AN INTEGRAL ABUTMENT BRIDGE AND AT ALL SUPERSTRUCTURE EXPANSION JOINTS
7. SEE VAOT STANDARD DRAWING C-1 FOR DETAILS OF DELINEATORS. A DELINEATOR SHALL BE INSTALLED AT 30 FT SPACING OR THE NEAREST POST. WHITE IS TO BE INSTALLED ON THE DRIVERS RIGHT. FOR ONE WAY BRIDGES, YELLOW IS TO BE INSTALLED ON THE DRIVERS LEFT. DELINEATORS PROVIDED BY OTHERS.
8. FOR RADII LESS THAN 950 FEET, HSS 8 X 4 TUBES SHALL BE SHOP BENT TO FIT THE APPLICABLE CURVE
9. THE MINIMUM DISTANCE FROM THE LAST POST TO THE END OF SLAB IS 1'-6"
10. FERRULES SHALL BE 12L14 COLD DRAWN CARBON STEEL
11. HOLES IN THE RAIL FOR RAIL TUBE ATTACHMENT MAY BE FIELD DRILLED. FIELD DRILLED HOLES SHALL BE COATED WITH AN APPROVED ZINC RICH PAINT PRIOR TO INSTALLATION
12. THIS RAILING MEETS THE REQUIREMENTS FOR A TL-2 SERVICE LEVEL.
13. ALL METAL PARTS SHALL BE HOT DIPPED GALVANIZED.

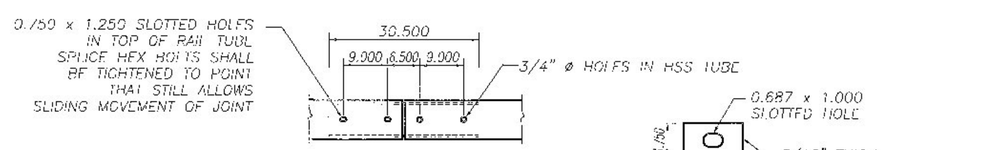


PARTIAL PLAN VIEW

AT SPLICE JOINT

RECTANGULAR WASHER

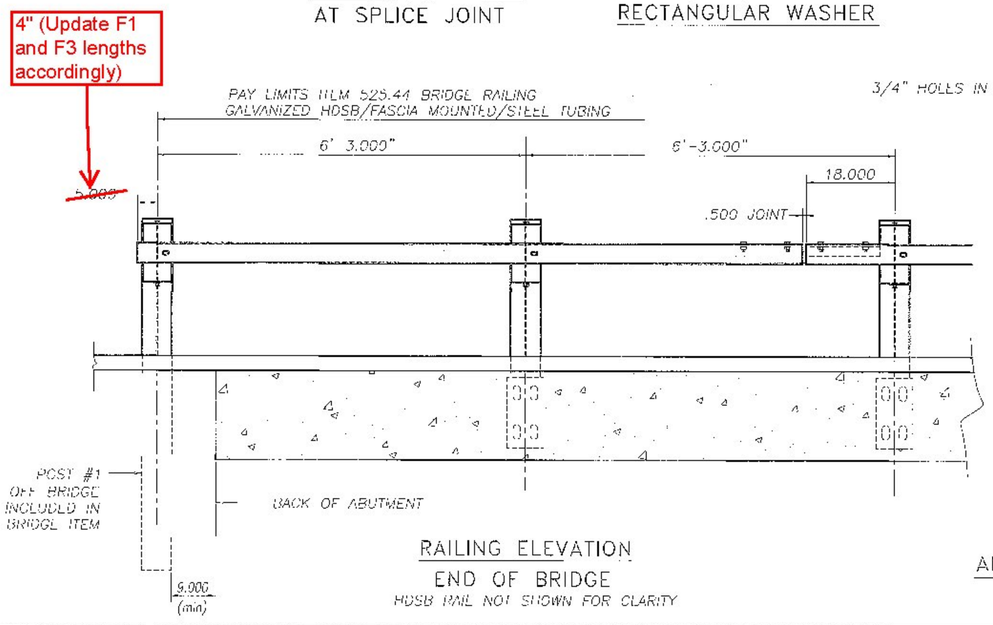


RAILING ELEVATION

END OF BRIDGE

HDSB RAIL NOT SHOWN FOR CLARITY

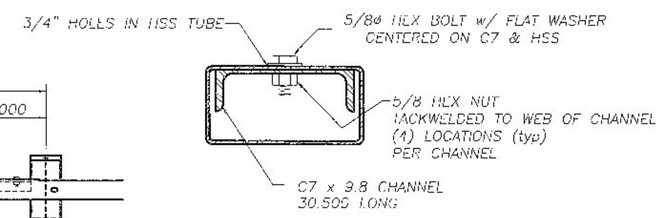


SECTION THRU 8x4 RAIL

AT SPLICE JOINT

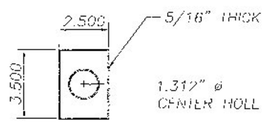


ANCHOR PLATE WASHER

(BY OTHERS)

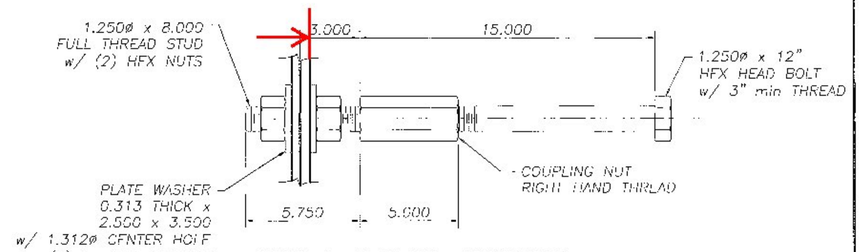


TYPE A ANCHOR ASSEMBLY

(2) PER POST

(BY OTHERS)

Vermont Agency of Transportation

RECEIVED

CK'D BY RK/JC OK'D BY RY

February 20, 2015

RESUBMIT No Approved AsNoted

BY RY DATE 03/09/2015

HIGHWAY SAFETY CORP

GLASTONBURY, CT

860-633-9445

ITEM 525.44 BRIDGE RAILING

GALVANIZED FASCIA MOUNTED HDSB STEEL TUBE

BRIDGE NO. 14 SOUTH ROAD BRF 0281(25)

FAIRFIELD VERMONT

AISC CERTIFIED FABRICATOR

AISC JOB NO. 2030

GENERAL CONTRACTOR

SUB CONTRACTOR LAFAYETTE

SHEET NO. 2 of 2

| DRAWN | CHECKED | DATE | SCALE | SIZE |
|---|---|---|---|---|
| PAR | | 02-17-15 | NTS | D |