SPLICE BAR - EXPANSION

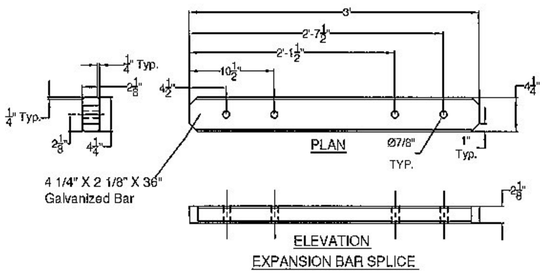

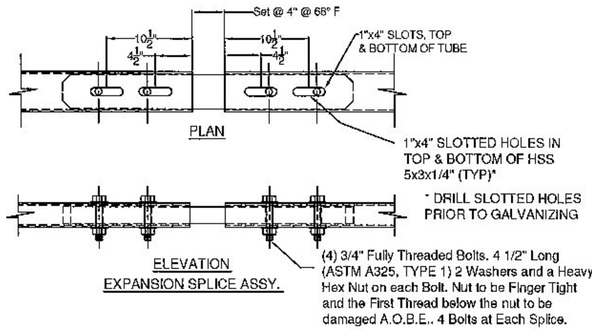

(ITEM # 9)

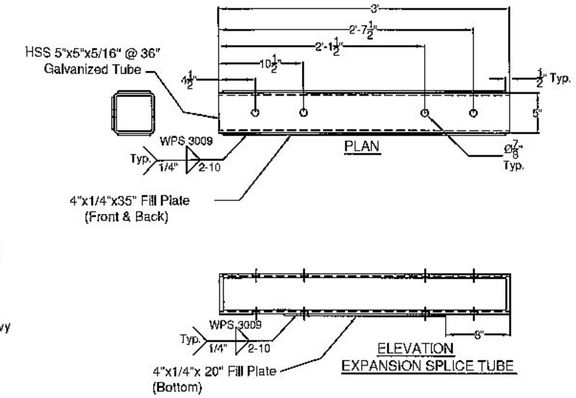

SPLICE TUBE - EXPANSION

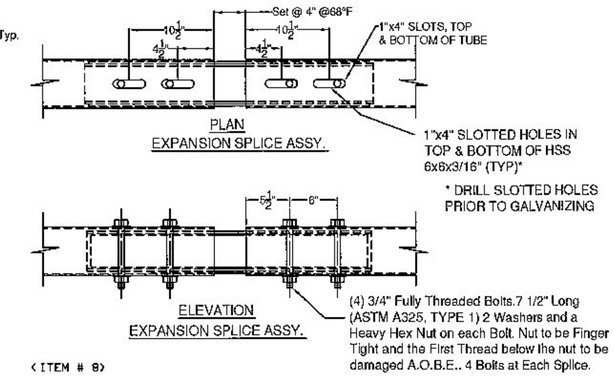

(ITEM # 8)

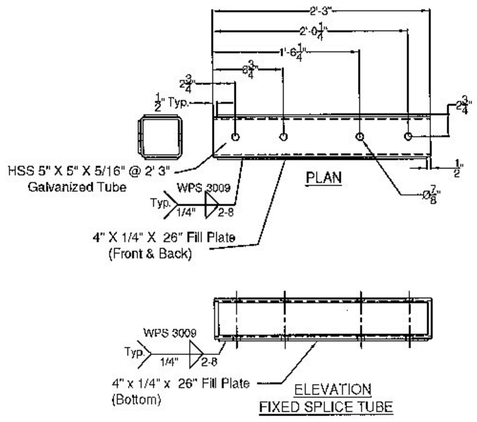

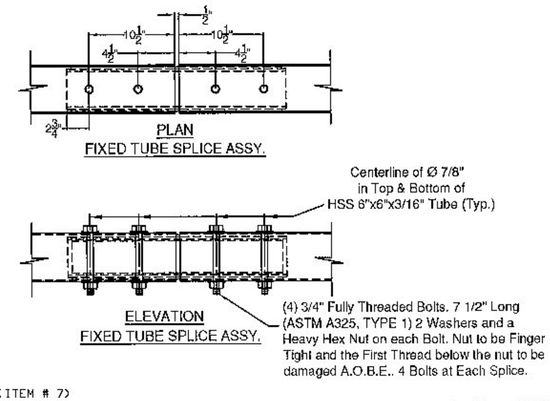

(ITEM # 7)

SPLICE TUBE - FIXED

Vermont Agency of Transportation

RECEIVED

ON: January 22, 2015

and Checked for

CONFORMANCE

BY: T. A. Sumner DATE: 01/28/15

ITEM #: 621.725

SHEET 5 OF 5

STRUCTURAL STEEL TO COMPLY W/ ASTM A6

TOLERANCE UNLESS OTHERWISE NOTED:
FRACTIONS = ± 1/16"
ANGLES = ± 1/2°
DIAMETERS = ± 1/32"

GUARD RAIL TO BRIDGE RAIL TRANSITION DETAILS SHEET

TOWN HIGHWAY 65 (PALMER ROAD), CLASS 3 LOCAL ROAD - BRIDGE # 35
PROJECT: BRO 1444(57), TOWN OF RANDOLPH, COUNTY OF ORANGE, VT.

REV	NO.	DATE	DESCRIPTION	BY	REV	NO.	DATE	DESCRIPTION	BY

ELDERLEE, INC.
OAKS CORNERS, NEW YORK 14518
E-Mail: dlong@elderlee.com / epeek@elderlee.com
Tel: 315-789-6670 Fax: 315-789-6615

AISC CERTIFIED FABRICATOR

DRAWN	E.P.	12/12/14
CHECKED	D.L.	12/15/14
APPROVED	.	.
SCALE	SCHEMATIC	
DRAWING NO.	F.R.L.-RANDOLPH-T	