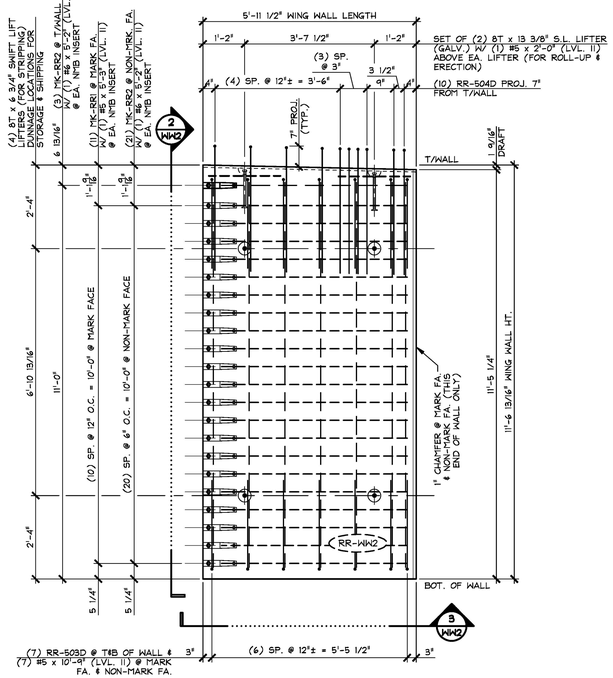

1 WW2 PLAN VIEW IN FORM

1/2" = 1'-0"

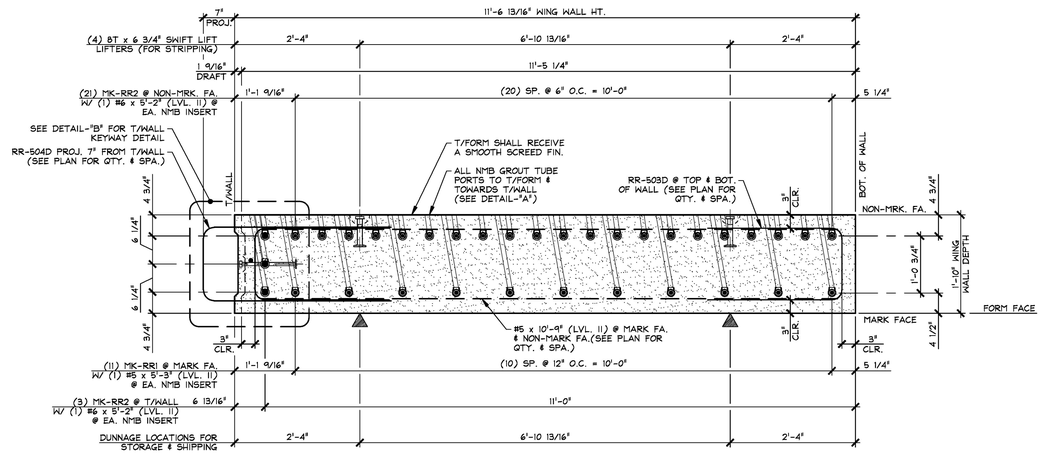

2 WW2 SIDE ELEVATION IN FORM

3/4" = 1'-0"

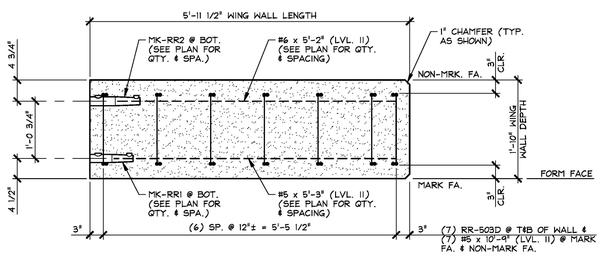

3 WW2 BOTTOM ELEVATION

3/4" = 1'-0"

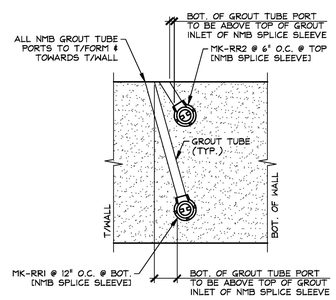

DETAIL - "A"

N.T.S.

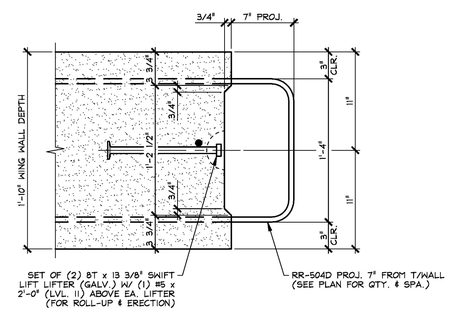

DETAIL - "B"

1 1/2" = 1'-0"

SHOP NOTE:
f'c = 5,000 PSI
f'ci = 3,500 PSI
MIX #4465MSCC

MARK: RR-WW2	QTY.: 1	WT.: 9.43 T	VOL.: 4.65 cy

MATERIAL LIST / WING WALL

ITEM	MARK	DESCRIPTION	QTY.
1	RR-503D	#5 BENT BAR (LEVEL II, DUAL COATED)	14
2	RR-504D	#5 BENT BAR (LEVEL II, DUAL COATED)	10
3		#5 x 5'-3" (LEVEL II, DUAL COATED)	11
4		#5 x 10'-9" (LEVEL II, DUAL COATED)	14
5		#5 x 2'-0" (LEVEL II, DUAL COATED)	2
6			
7		#6 x 5'-2" (LEVEL II, DUAL COATED)	24
8			
9			
10			
11	MK-RR1	NMB SPLICE SLEEVE 5U-X(PG) (EPOXY COATED)	11
12	MK-RR2	NMB SPLICE SLEEVE 6U-X(PG) (EPOXY COATED)	24
13		8T x 13 3/8" SWIFT LIFT LIFTER (GALV.)	2
14		8T x 6 3/4" SWIFT LIFT LIFTER (GALV.)	4
15			

APPROVAL STAMP:

J.P. CARRARA & SONS INC.
Precast & Prestress Manufacturer
2464 CASE STR., MIDDLEBURY, VERMONT 05753 Phone:(802)388-6361 Fax:(802)388-9010

CCS CONSTRUCTORS, INC.
CONTRACTOR
MORRISVILLE, VERMONT

STATE OF VERMONT AGENCY OF TRANSPORTATION
COUNTY OF ADDISON

DATE: OCT. 15, 2015
SCALE: NOTED

TOWN OF NEW HAVEN
T.H. 2 (RIVER ROAD) (CLASS 2 - MAJOR COLLECTOR)
BRIDGE NO.: 10 PROJECT NO.: BRF 0183 (1)

CHKD: A.S. DFTM: B.L.
JOB NO: 23475-015

PRECAST WING WALL DETAILS

DWG. NO: WW2

F:\VT-Bridges\23475-15 River Road\23475-WW2.dwg, 11/17/2015 9:26:47 AM