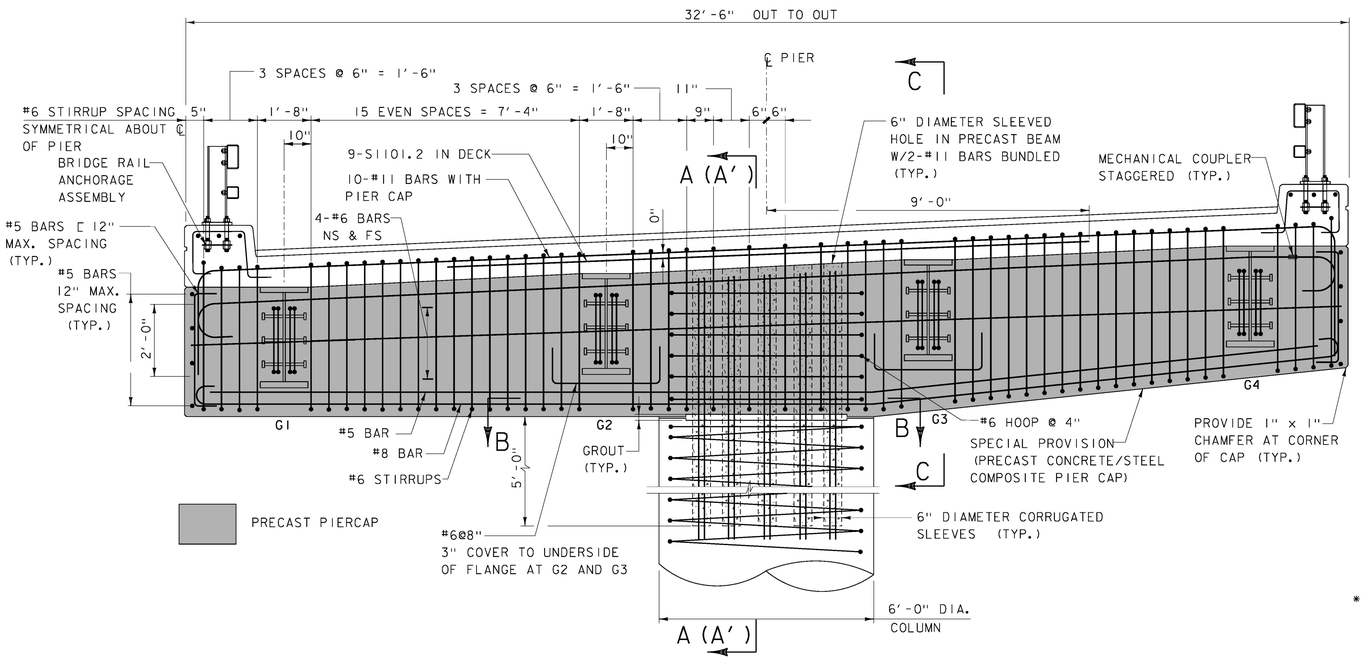

ELEVATION PIER CAP REINFORCEMENT

SCALE: 1/2" = 1'-0"

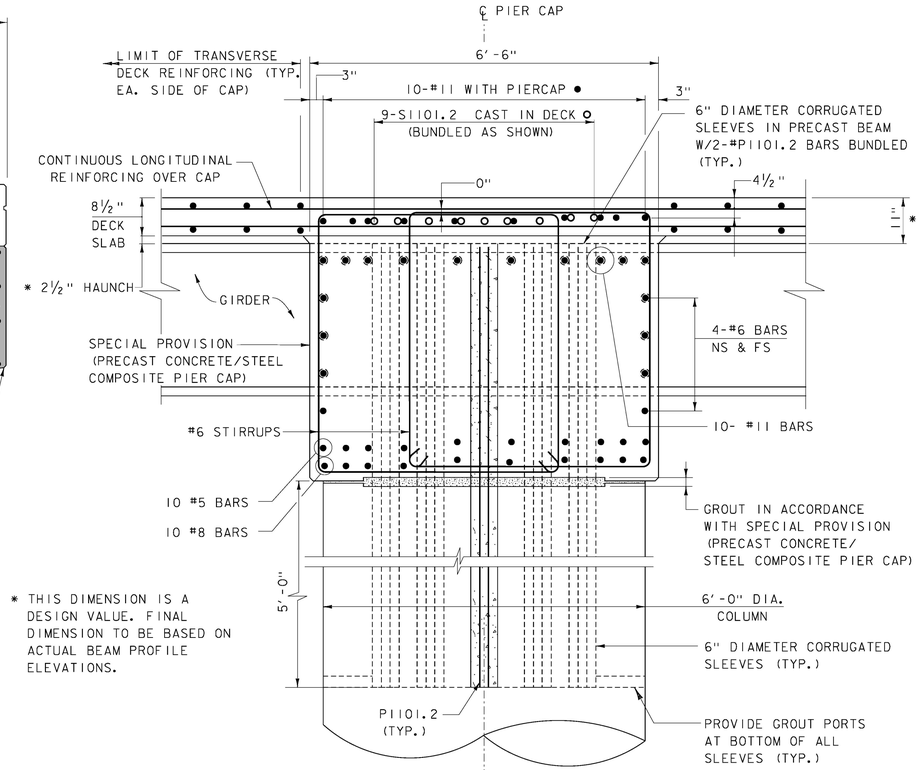

SECTION A-A

SCALE: 3/4" = 1'-0"

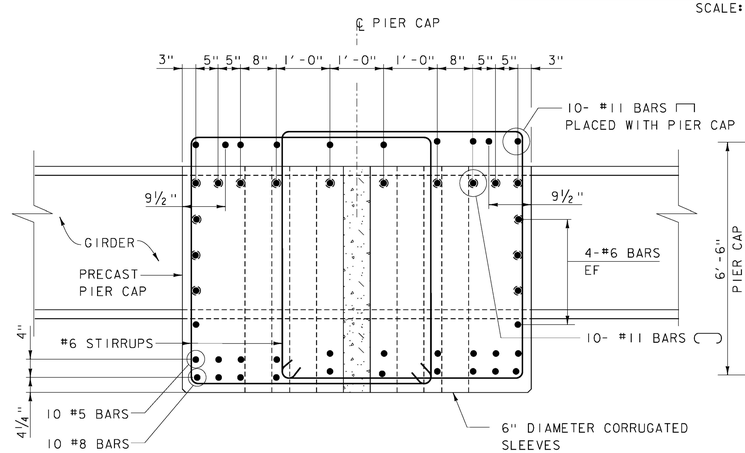

SECTION A'-A'
(PRECAST PIERCAP SHOWN ONLY)

SCALE: 3/4" = 1'-0"

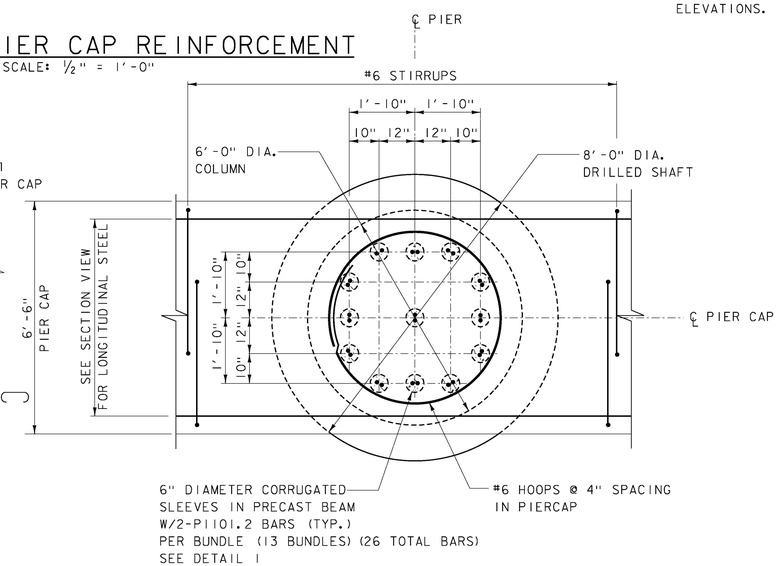

PLAN SECTION B-B

SCALE: 1/2" = 1'-0"

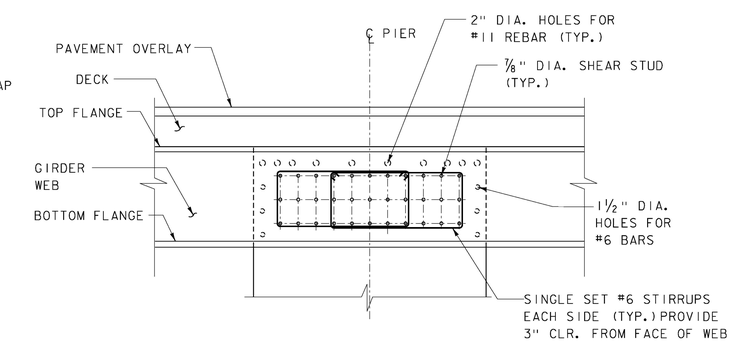

SECTION C-C

SCALE: 1/2" = 1'-0"

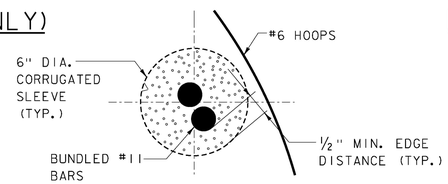

DETAIL 1

SCALE: 3" = 1'-0"

NOTE:

NF = NEAR FACE
FF = FAR FACE
EF = EACH FACE
3" CLEAR, UNLESS OTHERWISE SPECIFIED ON THE PLANS.

PARSONS BRINCKERHOFF
650 ELM STREET
MANCHESTER, NH 03101

PROJECT NAME: NEW HAVEN	
PROJECT NUMBER: BRF 0183 (1)	
FILE NAME: z10j070sup2.dgn	PLOT DATE: 23-JUNE-2015
PROJECT LEADER: G.K.DONINGTON	DRAWN BY: W GERHOLD
DESIGNED BY: J. KIM	CHECKED BY: B.BINNEY
PIER CAP DETAILS (2)	SHEET 41 OF 67