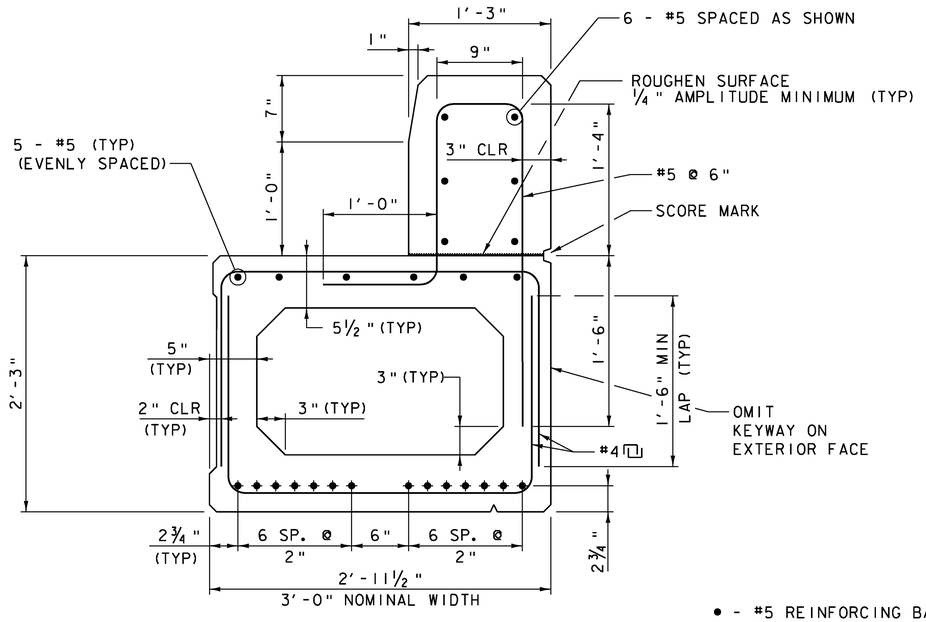

● - #5 REINFORCING BAR
✦ - 0.6" DIA. STRAND

PRESTRESSED CONCRETE BOX BEAM
BI-36
EXTERIOR
SCALE 1 1/2" = 1'-0"

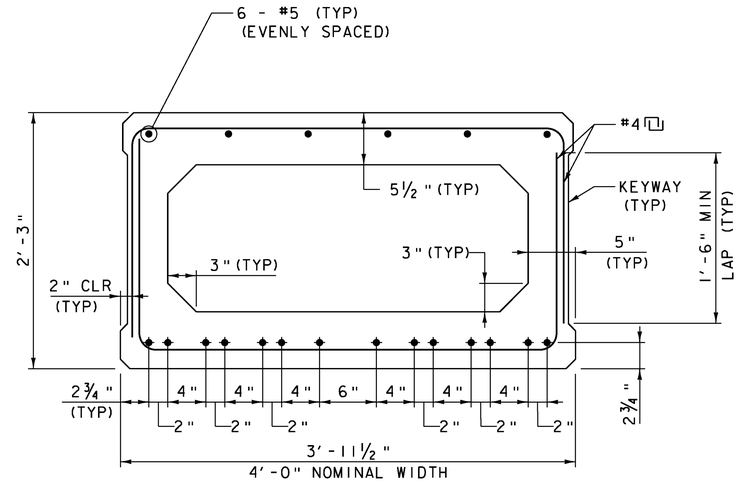

PRESTRESSED CONCRETE BOX BEAM
BI-48
INTERIOR
SCALE 1 1/2" = 1'-0"

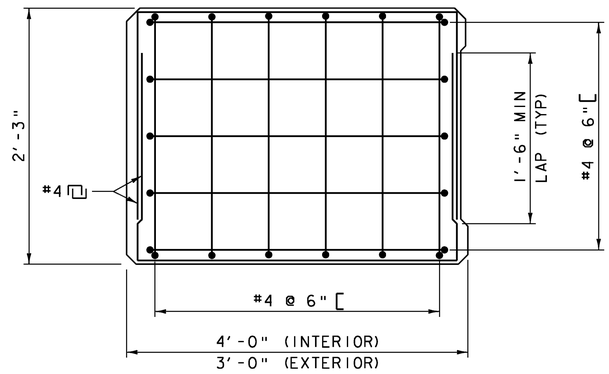

END BLOCK REINFORCING
(INTERIOR & EXTERIOR)
SCALE 1 1/2" = 1'-0"

NOTE:

NF = NEAR FACE
FF = FAR FACE
EF = EACH FACE
▲ = CUT TO FIT IN FIELD
3" CLEAR, UNLESS OTHERWISE SPECIFIED ON THE PLANS.
2'-2" BAR LAP UNLESS OTHERWISE SPECIFIED ON THE PLANS.

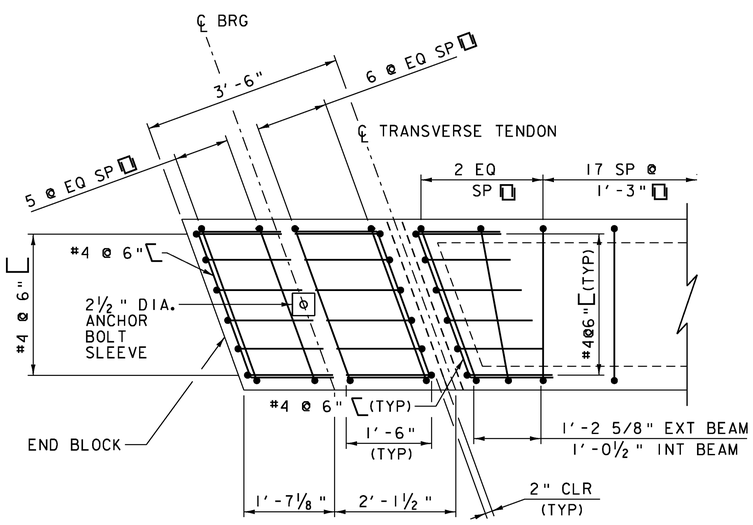

NOTE: EXTERIOR BEAM SHOWN, INTERIOR SIMILAR

END DIAPHRAGM REINFORCING
SCALE 3/4" = 1'-0"

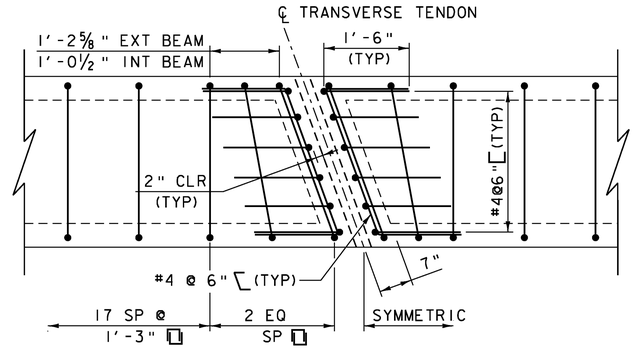

NOTE: EXTERIOR BEAM SHOWN, INTERIOR SIMILAR

INTERMEDIATE DIAPHRAGM REINFORCING
SCALE 3/4" = 1'-0"

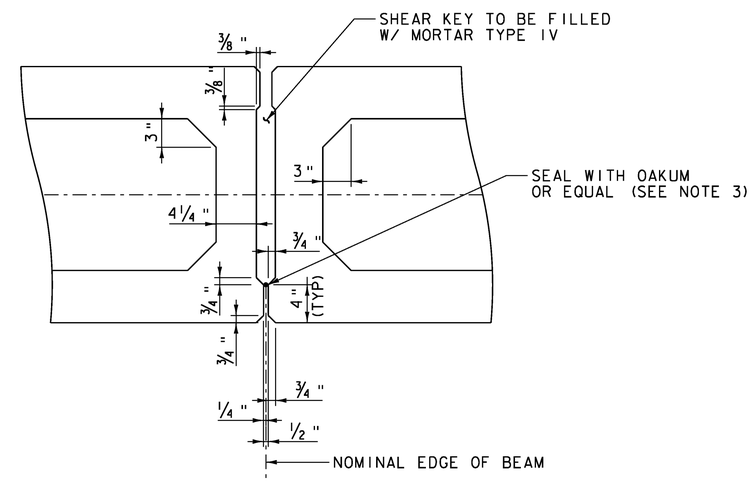

SHEAR KEY DETAIL
FOR BOX BEAM
SCALE 1 1/2" = 1'-0"

NOTES:

1. VOID DRAINS ARE REQUIRED FOR ALL BOX BEAMS. VOID DRAINS SHALL BE COMPRISED OF 3/4" NON-FERROUS DRAIN MATERIAL. THE CONTRACTOR SHALL CLEAN THE VOID DRAINS AFTER ERECTION.
2. ALL REINFORCING STEEL SHALL MEET THE REQUIREMENTS OF SECTION 507, LEVEL II.
3. INSTALL OAKUM AFTER UNITS HAVE BEEN PLACED.

Vanasse Hangen Brustlin, Inc.

PROJECT NAME: GUILFORD	
PROJECT NUMBER: BRO 1442(36)	
FILE NAME: z10J064sup2.dgn	PLOT DATE: 10/2/2013
PROJECT LEADER: S.E. BURBANK	DRAWN BY: J.L. LEMIEUX
DESIGNED BY: G. H. NEAL	CHECKED BY: A. F. PREZIOSO
BOX BEAM DETAILS (1 OF 2)	SHEET 21 OF 42