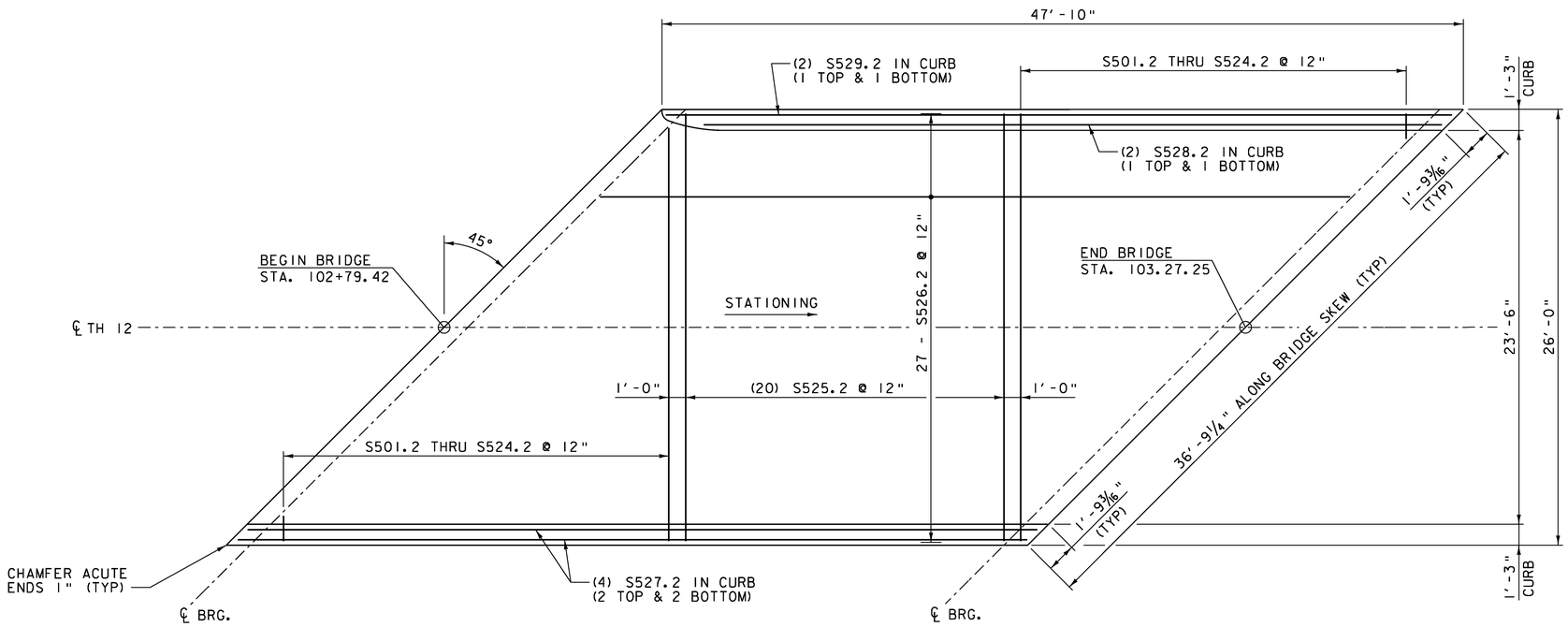

OVERLAY REINFORCING PLAN

SCALE 1/4" = 1'-0"

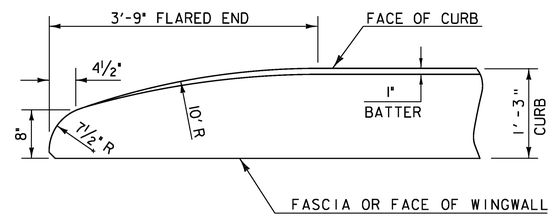

FLARED END DETAIL FOR 1'-3" CURB

CURB REINFORCING STIRRUP BARS SHALL BE TURNED AS REQUIRED TO FIT FLARED ENDS.

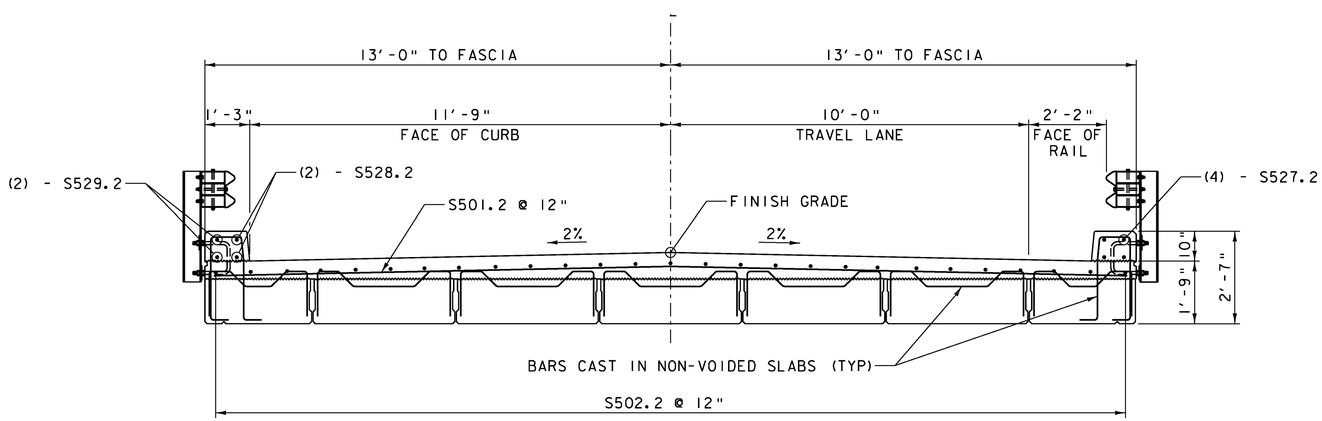

TYPICAL OVERLAY REINFORCEMENT

SCALE 1/2" = 1'-0"

NOTE:

NF = NEAR FACE
FF = FAR FACE
EF = EACH FACE
▲ = CUT TO FIT IN FIELD
3" CLEAR, UNLESS OTHERWISE SPECIFIED ON THE PLANS.
2'-2" BAR LAP UNLESS SPECIFIED ON THE PLANS.

Vanasse Hangen Brustlin, Inc.

PROJECT NAME: BRATTLEBORO	
PROJECT NUMBER: BRO 1442(35)	
FILE NAME: z10J062deck.dgn	PLOT DATE: 10/14/2013
PROJECT LEADER: S.E. BURBANK	DRAWN BY: J.L. LEMIEUX
DESIGNED BY: B.M. KLINEFELTER	CHECKED BY: S.E. BURBANK
OVERLAY REINFORCING DETAILS	SHEET 38 OF 68

VHB 57428