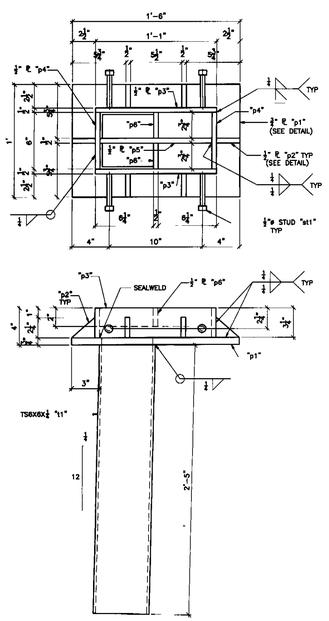

4 REQ'D. SCUPPER MARK "SC1"

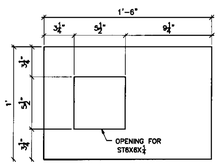

DETAIL ¾" PL "p1"

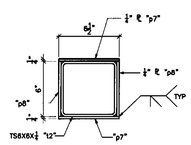

DETAIL ½" PL "p2"

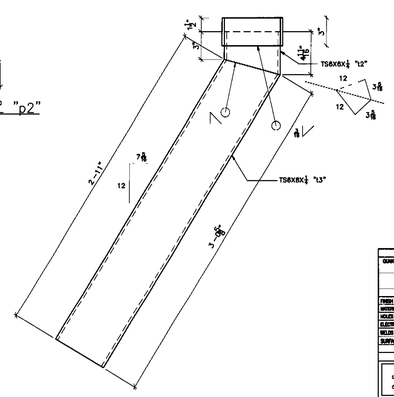

4 REQ'D. DRAIN PIPE MARK "DP1"

BILL OF MATERIAL

SHIP	SHIP MARK	NO. PCS	PIECE MARK	DESCRIPTION	LENGTH	REMARKS	MAT'L
4	SC1			SCUPPER			
		4	t1	TS 6X6X½	2'-5	ASM A500 GR.B	
		4	p1	PL 2X12	1'-6		
		24	p2	PL 1X2½	0'-2⅝		
		8	p3	PL 1X3	1'-1		
		8	p4	PL 1X3½	0'-6		
		4	p5	PL 1X2	1'-0		
		8	p6	PL 1X2	0'-2⅝		
		16	st1	¾"ø CONC. STUD	0'-4		
4	DP1			DRAIN PIPE			
		4	t2	TS 6X6X½	0'-6⅛	ASM A500 GR.B	
		4	t3	TS 6X6X½	3'-0⅞	ASM A500 GR.B	
		8	p7	PL 1X3	0'-8		
		8	p8	PL 1X3	0'-8		

BRACING BOLTS W/NUAIL				BRACKETS		FINISH
GUAGE	SIZE	LENGTH	TYPE	PLAT	BEV	BLK. ASSYD WELD

FINISH	HOT DIPPED GALVANIZED				
MATERIAL	AASHTO M270 GR. 36				
HOLES	AS NOTED				
ELECTRODES	PER A.W.S.				
WELDS	AS NOTED				
SURFACE PREP	SSPC-SP6				
		NO	DATE	DESCRIPTION REVISIONS	BY

ARC
ADVANCED RESOURCES & CONSTRUCTION, INC.

ADVANCED RESOURCES & CONST ENTERPRISES, INCORPORATED
P.O. BOX 120 SANFORD, NC. 27517
PHONE: (207) 356-3646 - FAX: (207) 356-4284

DRAWN	JRC	SCUPPER DETAILS	CONTRACT NO.
DATE	3/3/99	WIDGET CREEK & NORTHWEST BLVD. OVER I-95 SEDGEFIELD COUNTY, S.C.	DRAW. CODE (X)
CHECKED	MTD	PROJECT NO. 9-I-95-WIDGET(1) & 9-I-95-NORTHWEST(1) S.P.S. 33001	
DATE	3/8/99	T BUCK CONSTRUCTION, INC	DWG. NO. 2

ARC AND DOB-113