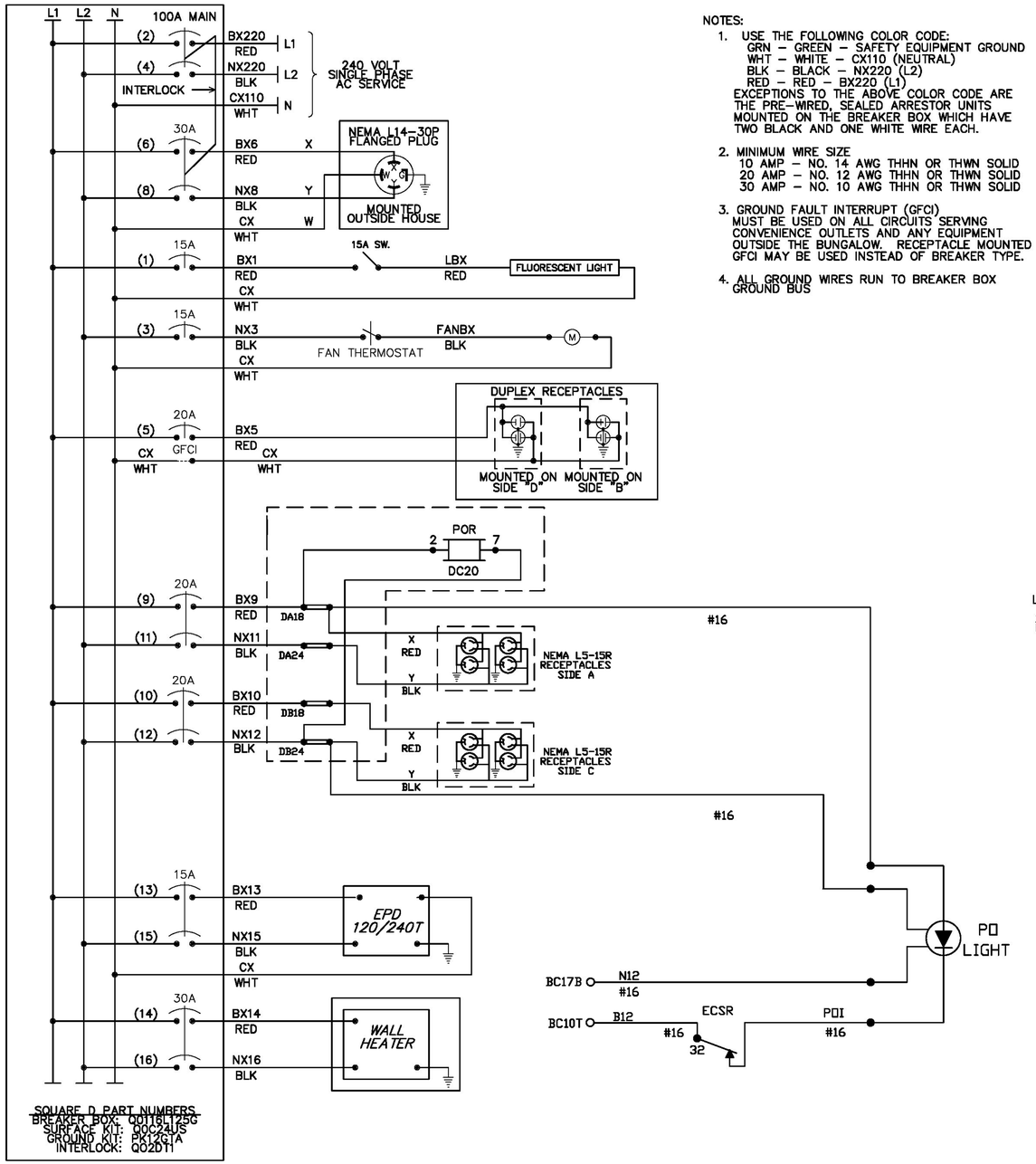

NOTES:

1. USE THE FOLLOWING COLOR CODE:
   GRN – GREEN – SAFETY EQUIPMENT GROUND
   WHT – WHITE – CX110 (NEUTRAL)
   BLK – BLACK – NX220 (L2)
   RED – RED – BX220 (L1)
   EXCEPTIONS TO THE ABOVE COLOR CODE ARE THE PRE-WIRED, SEALED ARRESTOR UNITS MOUNTED ON THE BREAKER BOX WHICH HAVE TWO BLACK AND ONE WHITE WIRE EACH.
2. MINIMUM WIRE SIZE
   10 AMP – NO. 14 AWG THHN OR THWN SOLID
   20 AMP – NO. 12 AWG THHN OR THWN SOLID
   30 AMP – NO. 10 AWG THHN OR THWN SOLID
3. GROUND FAULT INTERRUPT (GFCI) MUST BE USED ON ALL CIRCUITS SERVING CONVENIENCE OUTLETS AND ANY EQUIPMENT OUTSIDE THE BUNGALOW. RECEPTACLE MOUNTED GFCI MAY BE USED INSTEAD OF BREAKER TYPE.
4. ALL GROUND WIRES RUN TO BREAKER BOX GROUND BUS

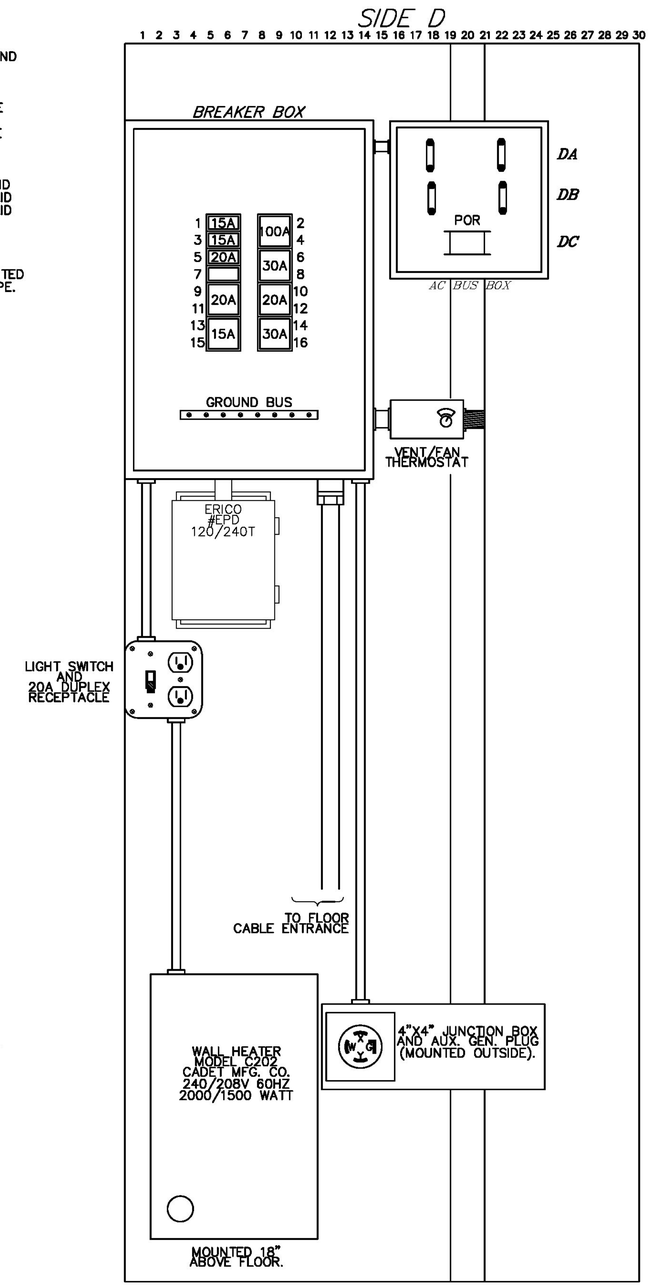

Revisions:	Drawn By:	App'd. By:	Date:

Designed By: SLW	Date: 4/16	
Drawn By: SLW	Date: 4/16	
Checked By: SLW	Date: 4/16	

UNAUTHORIZED ALTERATION OR ADDITION TO THIS DOCUMENT IS A VIOLATION OF SECTION 7209 SUBDIVISION 2 OF THE NEW YORK STATE EDUCATION LAW

SARATOGA RAILROAD ENGINEERING PC
25 Cobble Hill Drive
Wilton, NY 12831
(518) 424-6794
Slwertans@earthlink.net
www.saratogarailroad.com

VERMONT RAILWAY

VERMONT RAILWAY
ONE RAILWAY LANE
BURLINGTON, VT
05401

GRADE CROSSING WARNING SIGNALS
POWER CIRCUITS PLAN

EAST ARLINGTON RD., ARLINGTON, VT.

SCALE: NONE | DATE: APRIL 2016

Drawing No. P-1

SHEET 8 OF 10