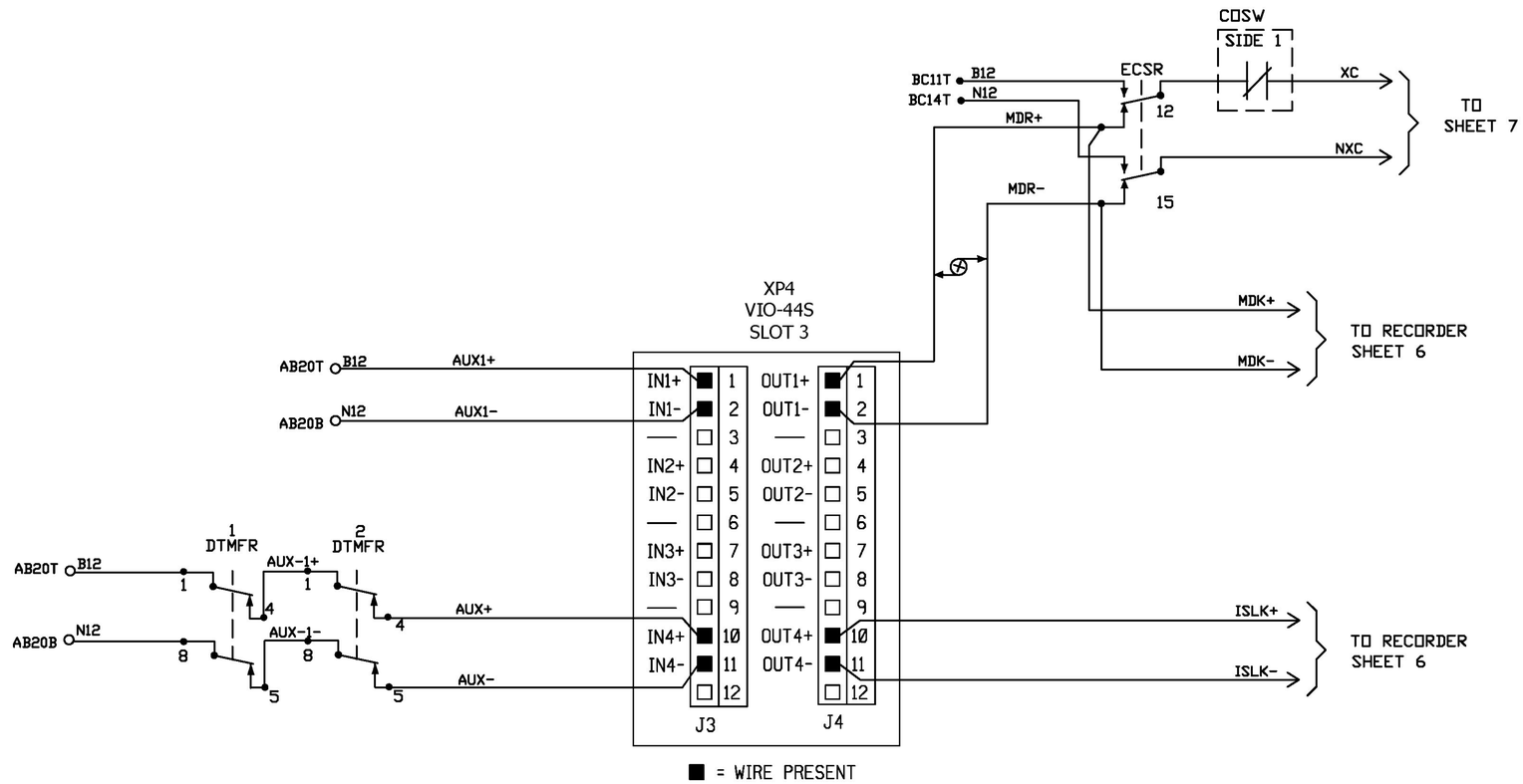

NOTE:

ALL WIRE THIS SHEET IS #16 AWG. FLEX UNLESS OTHERWISE NOTED.

- DENOTES TWISTED PAIR

Revisions:	Drawn By:	App'd. By:	Date:

Designed By: SLW	Date: 4/16	
Drawn By: SLW	Date: 4/16	
Checked By: SLW	Date: 4/16	

UNAUTHORIZED ALTERATION OR ADDITION TO THIS DOCUMENT IS A VIOLATION OF SECTION 7209 SUBDIVISION 2 OF THE NEW YORK STATE EDUCATION LAW

SARATOGA RAILROAD ENGINEERING PC
25 Cobble Hill Drive
Wilton, NY 12831
(518) 424-6794
Slwertans@earthlink.net
www.saratogarailroad.com

VERMONT RAILWAY

VERMONT RAILWAY
ONE RAILWAY LANE
BURLINGTON, VT
05401

GRADE CROSSING WARNING SIGNALS
XP4 VIO SETUP PLAN

EAST ARLINGTON RD., ARLINGTON, VT.

SCALE: NONE | DATE: APRIL 2016

Drawing No. X-3

SHEET 4 OF 10