NOTES

1. DRILL A 2" HOLE ON TOP ARM CORD FOR WIRING, IN THE CENTER OF JURY MAST
2. DRILL A 1/4" WEEP HOLE ON THE BOTTOM ARM CORD AT CENTER OF JURY MAST
3. CUT GRATING AROUND JURY MAST

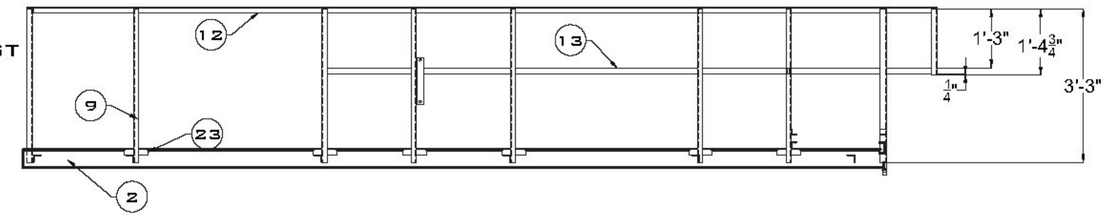

SECTION B

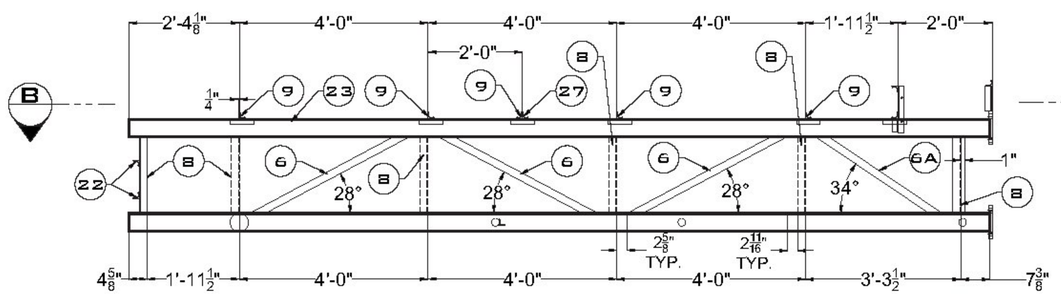

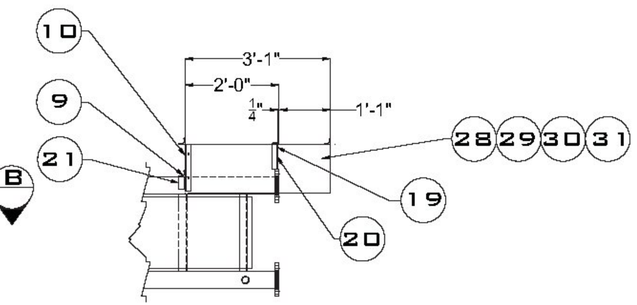

SECTION A

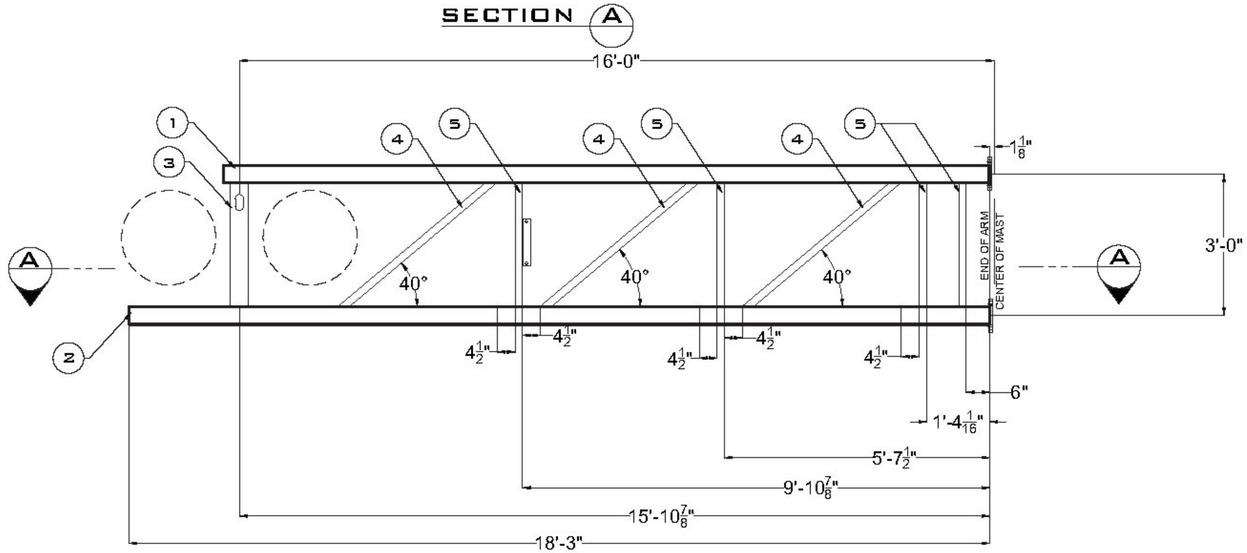

FRONT VIEW

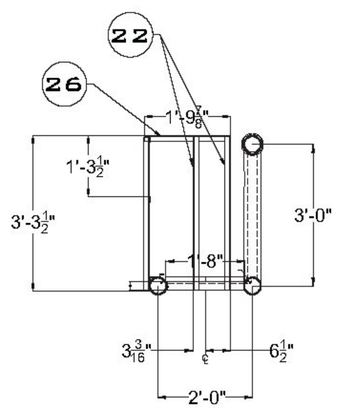

LEFT SIDE VIEW

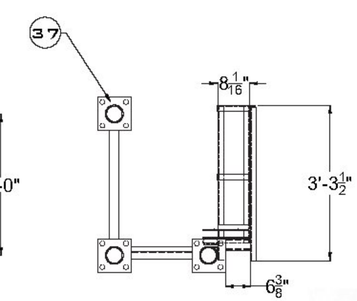

RIGHT SIDE VIEW

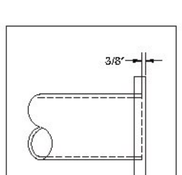

DETAIL OF TOP FLANGE MOUNTING

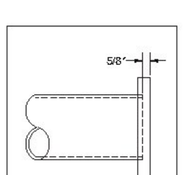

DETAIL OF BOTTOM FLANGE MOUNTING

STATE OF VERMONT
LOKMAN NG
No. 115137
STRUCTURAL
LICENSED
PROFESSIONAL ENGINEER
05/05/2016

REV.	DESCRIPTION	REVISED BY	DATE:	ENG'R	DATE:
H					
G					
F					
E					
D					
C					
B					
A					

REVISIONS — APPROVALS

JOB # PRODUCTION ORDER

THE DRAWING IS PROPRIETARY PROPERTY OF PROGRESS RAIL SERVICES

UNLESS OTHERWISE SPECIFIED DIMENSIONS ARE IN INCHES
TOLERANCES
DECIMAL .0625"+ .0625"– FRACTIONS ± 1/16" – 1/16"
DO NOT SCALE THIS DRAWING

PROGRESS RAIL SERVICES
A Caterpillar Company

Louisville Signal Division

DRAWN BY: JEA	DATE: 04/28/16	SCALE:	NONE
CHECKED BY: XXX	DATE: 00/00/00	SHEET:	2 OF 2

CANT. 16' ARM CUSTOM

DRAWING #: 9454ST0102 REV.