NEW DESIGN

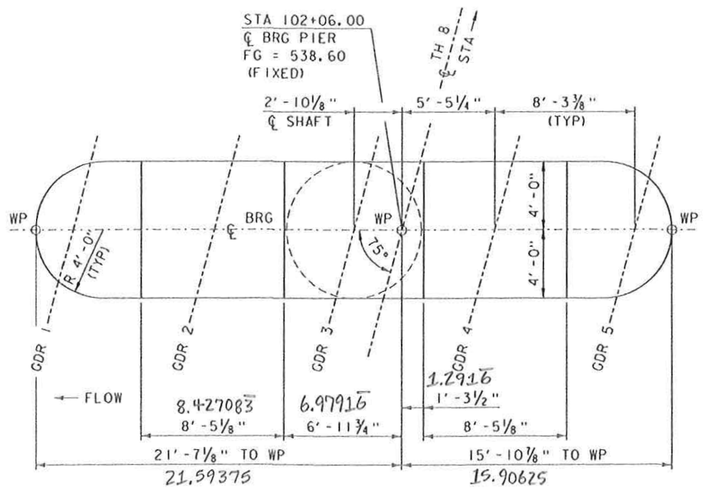

PIER PLAN

SCALE: ¼" = 1' - 0"

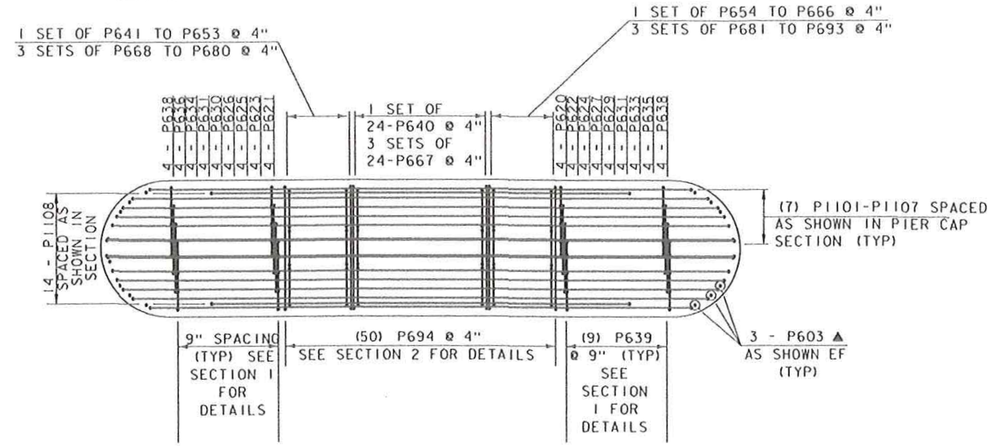

PIER CAP REINFORCING

SCALE: ¼" = 1' - 0"

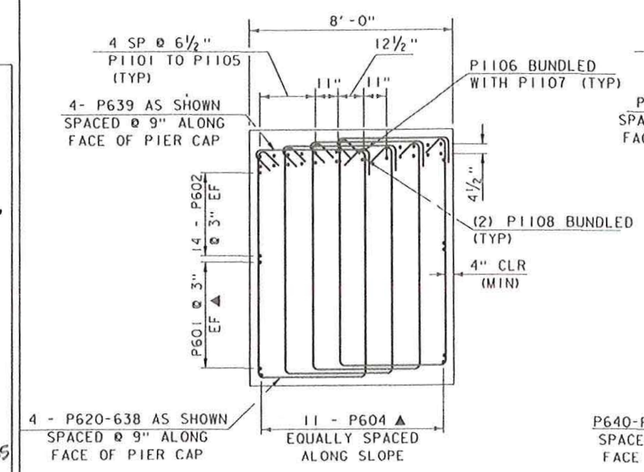

PIER CAP SECTION 1

SCALE: ⅜" = 1' - 0"

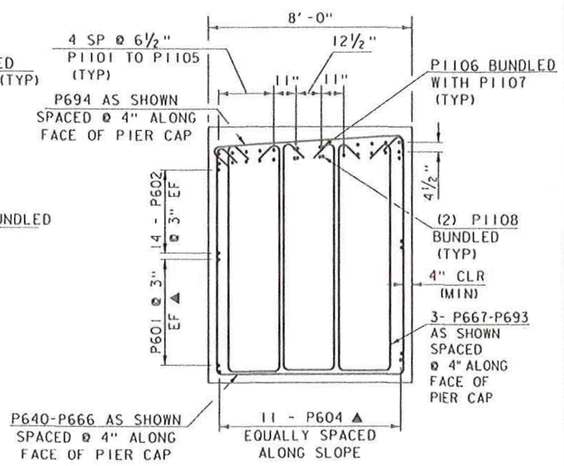

PIER CAP SECTION 2

SCALE: ⅜" = 1' - 0"

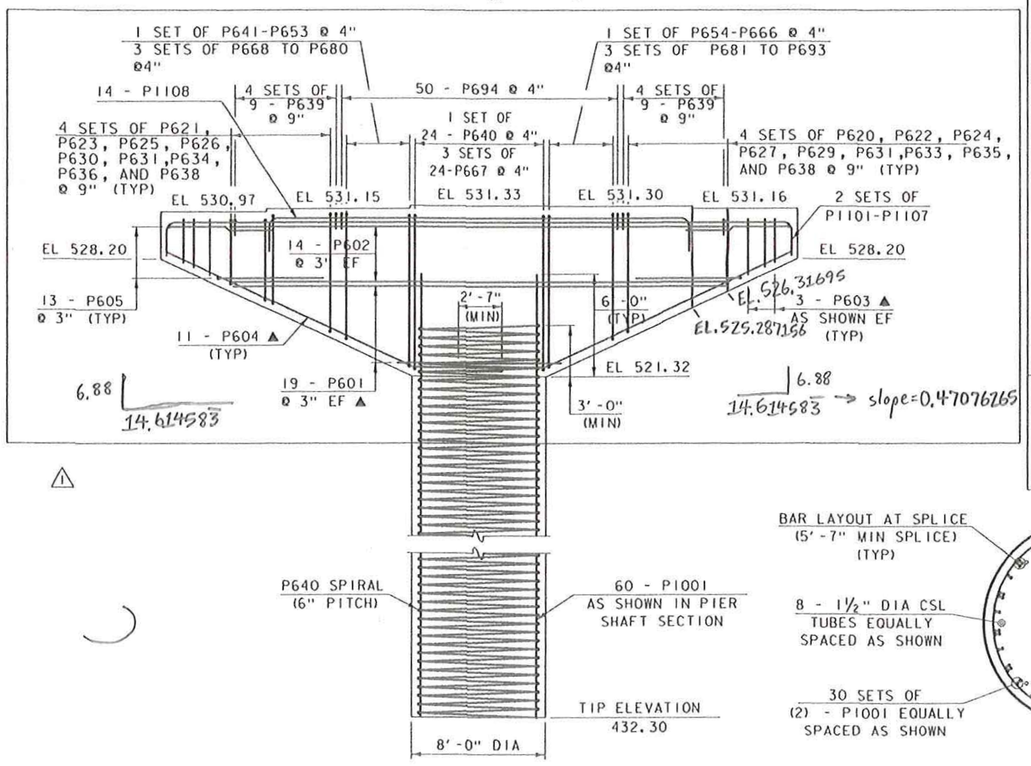

PIER ELEVATION

SCALE: ¼" = 1' - 0"

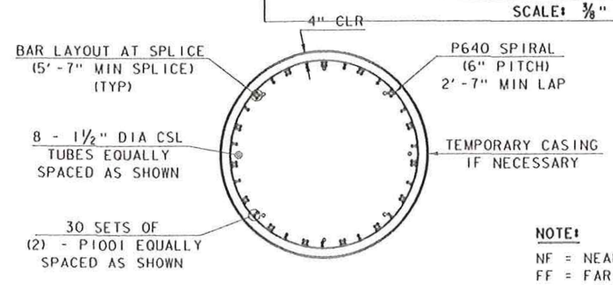

PIER SHAFT SECTION

SCALE: ⅜" = 1' - 0"

NOTE:

NF = NEAR FACE
FF = FAR FACE
EF = EACH FACE
▲ = CUT TO FIT IN FIELD
3" CLR. UNLESS OTHERWISE NOTED
2' - 2" BAR LAP UNLESS OTHERWISE NOTED

1 REVISION 1 5/22/2015

PROJECT NAME: RUTLAND CITY	
PROJECT NUMBER: BRF 3000 (16)	
FILE NAME: s94J092sub.dgn	PLOT DATE: 22-MAY-2015
PROJECT LEADER: C. CARLSON	DRAWN BY: G. ROY
DESIGNED BY: M. EVANS-MONGEON	CHECKED BY: M. EVANS-MONGEON
PIER DETAILS	SHEET 187A OF 245