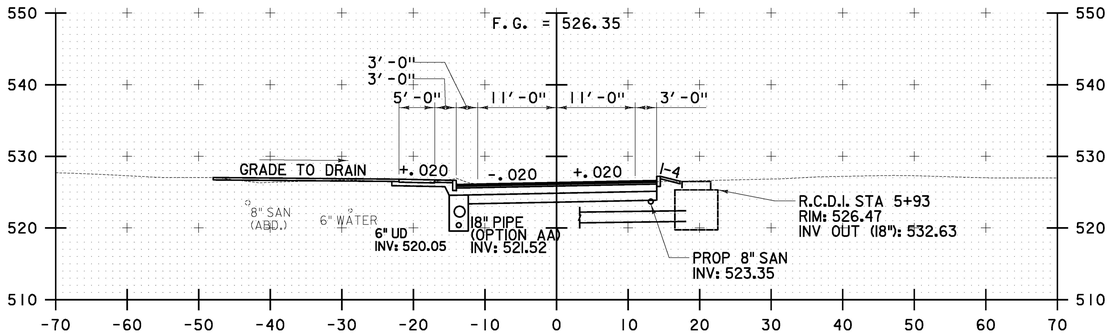

6+00

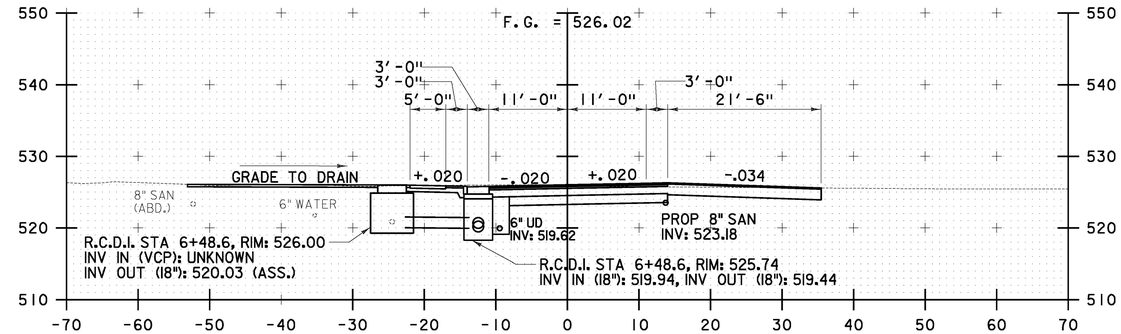

6+50

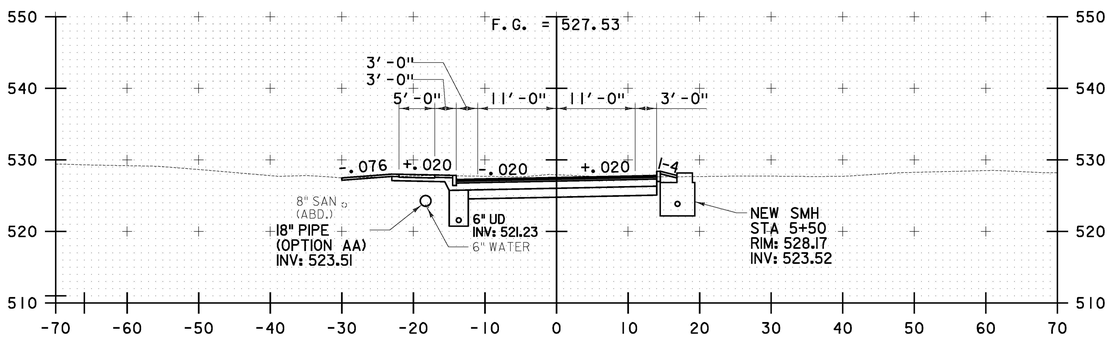

5+50

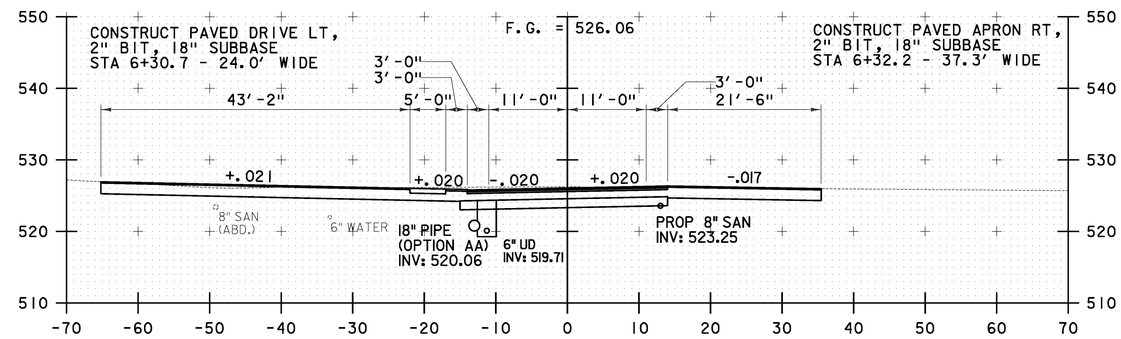

6+30

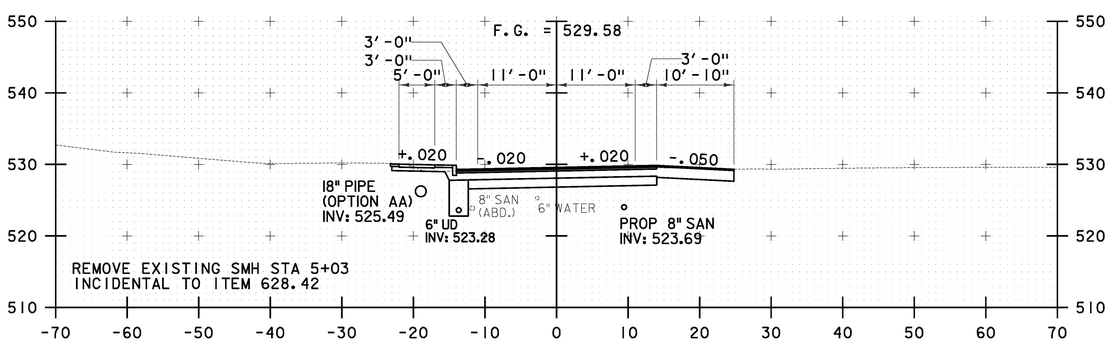

5+00

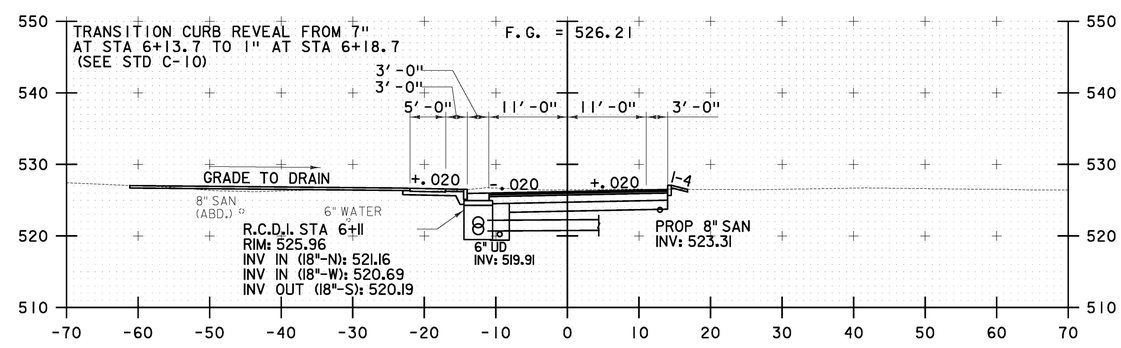

6+11

NOTE:

1. EXISTING UTILITIES INCLUDING WATER, SANITARY SEWER AND STORM SEWER PIPES ARE SHOWN IN THEIR APPROXIMATE LOCATIONS. THE CONTRACTOR IS RESPONSIBLE FOR CONFIRMING THE LOCATIONS OF ALL UTILITIES AT LEAST 48 HOURS PRIOR TO COMMENCING EXCAVATION OPERATIONS BY CONTACTING "DIG SAFE" AT (888) 344-7233.

10 0 10
SCALE IN FEET

CHA

STA. 5+00 TO STA. 6+50

TH 10 CROSS SECTIONS #2

PROJECT NAME: RUTLAND CITY
PROJECT NUMBER: BRF 3000 (19)

PROJECT LEADER: M.D.S.
DESIGNED BY: C.R.H.
DWG. NO.: THIOXS-2

PLOT DATE: 6/30/2014
DRAWN BY: C.R.H.
CHECKED BY: D.E.G.
SHEET 82 OF 245

FILE NAME = V:\Projects\ANY\K2\28615\CADD\MSTN\08_096\consultants\z08_096xs2.dgn
DATE/TIME = 6/30/2014
USER = 4916