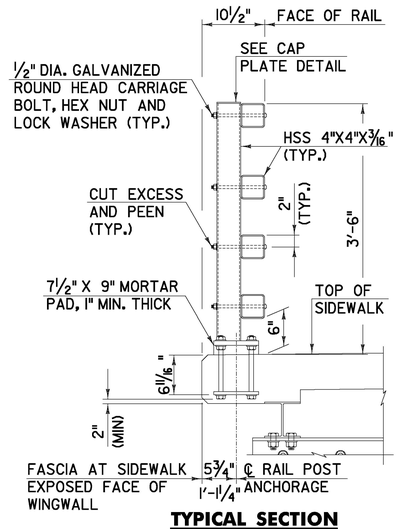

TYPICAL SECTION

(DECK SECTION SHOWN, WINGWALL SECTION SIMILAR)
SCALE 1" = 1'-0"

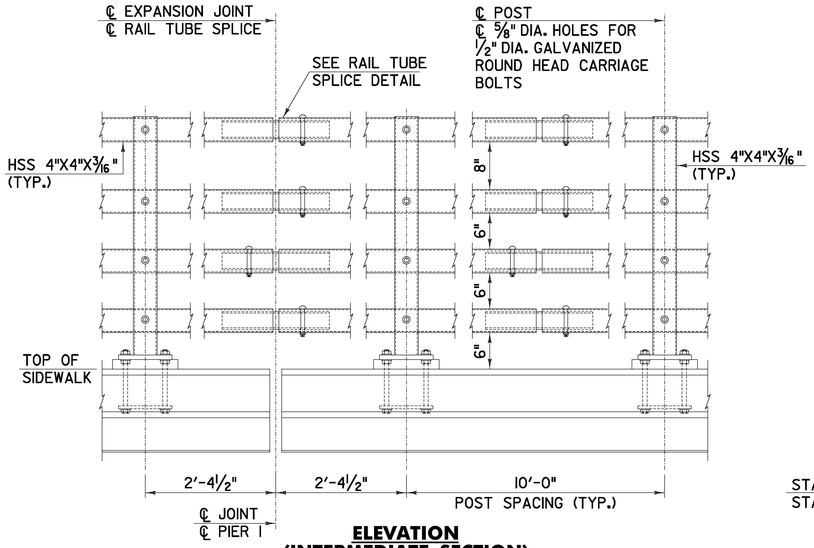

ELEVATION (INTERMEDIATE SECTION)

SCALE 1" = 1'-0"

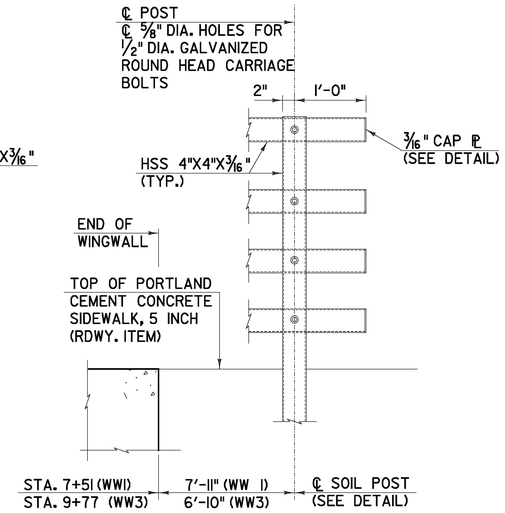

ELEVATION (END SECTION)

SCALE 1" = 1'-0"

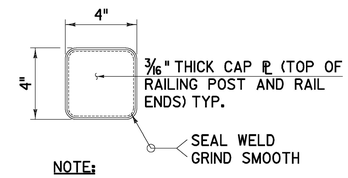

NOTE:

END CAPS FOR RAILINGS ARE TO BE USED ONLY WHERE THE RAIL TERMINATES AND AT THE TOPS OF ALL POSTS.

CAP PLATE DETAIL

(TYPICAL FOR TOP OF RAILING POSTS AND RAIL ENDS)
NOT TO SCALE

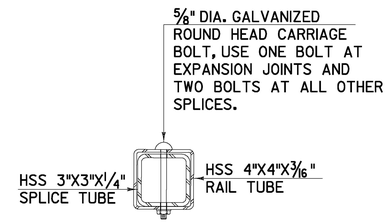

SECTION UU-UU

NOT TO SCALE

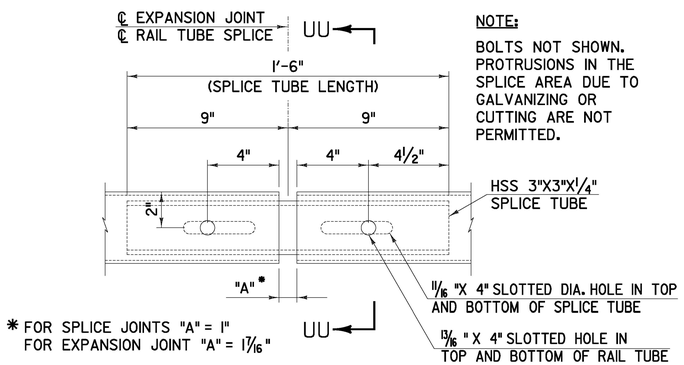

* FOR SPLICE JOINTS "A" = 1"
FOR EXPANSION JOINT "A" = 1 7/16"

NOTE:

BOLTS NOT SHOWN. PROTRUSIONS IN THE SPLICE AREA DUE TO GALVANIZING OR CUTTING ARE NOT PERMITTED.

RAIL TUBE SPLICE DETAIL

SCALE 3" = 1'-0"

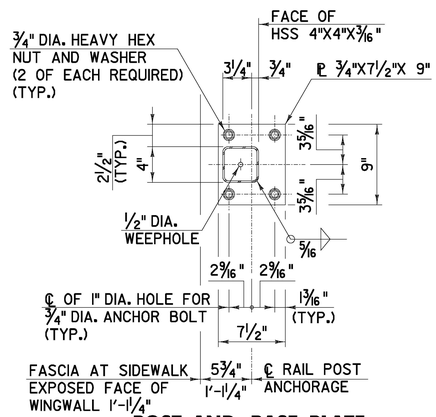

POST AND BASE PLATE

SCALE 1½" = 1'-0"

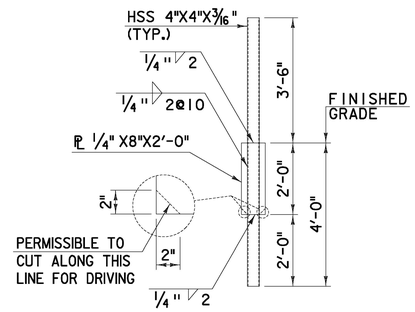

SOIL POST DETAIL

SCALE½" = 1'-0"

PEDESTRIAN RAILING NOTES:

1. ALL WORK AND MATERIALS SHALL CONFORM TO STANDARD SPECIFICATION SECTION 525.
2. ALL RAILING COMPONENTS, INCLUDING, BUT NOT LIMITED TO, TUBULAR STEEL RAILS, RAIL POSTS, NUTS AND WASHERS, CARRIAGE BOLTS, BASE PLATE ASSEMBLIES, ANCHOR BOLTS, ANCHOR PLATES, ANY NECESSARY SHIMS AND MORTAR PADS SHALL BE PAID FOR UNDER ITEM 900.640 SPECIAL PROVISION (BRIDGE RAILING, STEEL/PEDESTRIAN).
3. ALL EXPOSED CUT OR SHEARED EDGES SHALL BE ROUNDED TO A 1/16" RADIUS AND BE FREE OF BURRS. ALL RAILING COMPONENTS ARE TO BE GALVANIZED IN ACCORDANCE WITH STANDARD SPECIFICATION SUBSECTION 726.08.
4. RAIL POSTS SHALL BE SET NORMAL TO GRADE.
5. ANY BENDING OF RAIL SHALL BE BY SHOP PROCEDURE ONLY.
6. THE FABRICATOR SHALL SUBMIT FABRICATION DRAWINGS INCLUDING WELDING PROCEDURES TO THE STRUCTURES ENGINEER FOR APPROVAL. ALL WELDING SHALL CONFORM TO STANDARD SPECIFICATION SUBSECTION 506.10.
7. AFTER THE ANCHOR STUD NUTS HAVE BEEN PLACED AND TIGHTENED TO THE SATISFACTION OF THE RESIDENT ENGINEER, THE STUDS SHALL BE CUT OFF 1" ABOVE THE NUT AND THE THREADS DAMAGED.
8. RAIL SHALL SPAN A MINIMUM OF 3 POSTS, EXCEPT AT THE END SECTIONS WHERE THE RAIL MAY SPAN A MINIMUM OF 2 POSTS.

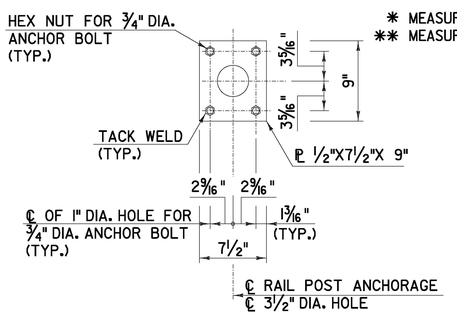

* MEASURED TO FACE OF RAIL POST FROM FACE OF TANGENT RAIL
** MEASURED ALONG FACE OF RAIL

RAILING POST ANCHOR PLATE

SCALE 1½" = 1'-0"

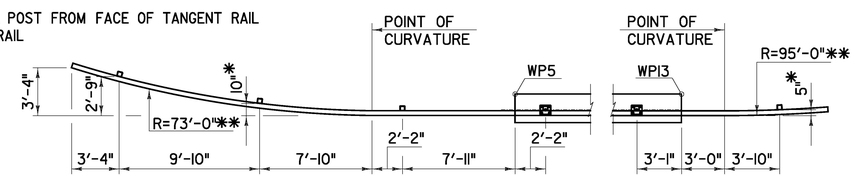

RAIL LAYOUT PLAN

SCALE 1" = 5'-0"

SCALE 3" = 1'-0
9 6 3 0

SCALE 1" = 5'-0
5 0 5

SCALE ½" = 1'-0
1 0 1 2

SCALE 1" = 1'-0
9 6 3 0 1 2

SCALE 1½" = 1'-0
9 6 3 0

CHA

PEDESTRIAN RAIL DETAILS	PROJECT NAME: RUTLAND CITY PROJECT NUMBER: BRF 3000 (19)	
	PROJECT LEADER: M.D.S. DESIGNED BY: D.M.D. DWG. NO.:	PLOT DATE: 6/30/2014 DRAWN BY: D.M.D. CHECKED BY: P.M.P. SHEET 78 OF 245

FILE NAME = V:\Projects\ANY\K2\20615\CADD\MSTN\08_096\consultants\x08_096pedrail.dgn
DATE/TIME = 6/30/2014
USER = 4916