FOUNDATION NOTES:

1. THE FACTORED AXIAL DESIGN LOADS PER PILE ARE 174 KIPS (ABUTMENTS 1 AND 2) AND 255 KIPS (PIER 1) AS PER AASHTO LRFD BRIDGE DESIGN SPECIFICATIONS STRENGTH 1 LOAD COMBINATION.
2. PILES SHALL BE INSTALLED TO ACHIEVE A NOMINAL AXIAL RESISTANCE OF 268 KIPS (ABUTMENTS 1 AND 2) AND 392 KIPS (PIER 1). THE NOMINAL AXIAL RESISTANCE IS BASED ON THE FACTORED AXIAL DESIGN LOADS PER PILE AND A RESISTANCE FACTOR OF 0.65.
3. ALL PILES FOR PIER 1 SHALL BE DRIVEN TO A MINIMUM EMBEDMENT OF 50 FEET BELOW BOTTOM OF FOOTING ELEVATION. ALL PILES FOR ABUTMENTS 1 & 2 SHALL BE DRIVEN TO A MINIMUM EMBEDMENT OF 40 FEET BELOW BOTTOM OF FOOTING ELEVATION. HEAVY DUTY PILE SHOES SHALL BE INSTALLED ON THE TIPS OF ALL PILES IN ACCORDANCE WITH STANDARD SPECIFICATION SUBSECTION 505.04(f).
4. THE FIRST PILE DRIVEN AT EACH SUBSTRUCTURE UNIT SHALL BE SUBJECT TO DYNAMIC LOAD TESTING. REMAINDER OF PILES SHALL BE CALIBRATED BY WAVE EQUATION ANALYSIS IN ACCORDANCE WITH STANDARD SPECIFICATION SUBSECTION 505.04(d)(3).

| ABUTMENT 1 | | |
|---|---|---|
| WP | NORTHING | EASTING |
| WP1 | 402115.90 | 1507169.11 |
| WP2 | 402108.79 | 1507179.40 |
| WP3 | 402128.13 | 1507192.75 |
| WP4 | 402148.36 | 1507206.72 |
| WP5 | 402155.46 | 1507196.44 |

| PIER 1 | | |
|---|---|---|
| WP | NORTHING | EASTING |
| WP6 | 402059.18 | 1507256.94 |
| WP7 | 402075.85 | 1507268.45 |
| WP8 | 402092.51 | 1507279.96 |

| ABUTMENT 2 | | |
|---|---|---|
| WP | NORTHING | EASTING |
| WP9 | 401987.46 | 1507355.07 |
| WP10 | 401992.86 | 1507347.25 |
| WP11 | 402012.20 | 1507360.61 |
| WP12 | 402032.42 | 1507374.58 |
| WP13 | 402027.02 | 1507382.40 |

EXCAVATION SUPPORT AND COFFERDAM NOTES:

1. THE CONTRACTOR IS NOTIFIED THAT EXCAVATION SUPPORT SYSTEM WILL BE REQUIRED IN THE NORTHEAST AND NORTHWEST QUADRANTS TO PROTECT THIO (RIPLEY ROAD) DURING CONSTRUCTION OF ABUTMENT 1 AND 2. ESTIMATED LIMITS OF REQUIRED EXCAVATION SUPPORT SYSTEM ARE SHOWN. IF CONTRACTOR CHOOSES TO INCREASE THE LIMITS, IT WILL BE AT NO ADDITIONAL COST TO THE STATE OF VERMONT.
2. THE CONTRACTOR SHALL SUBMIT WORKING DRAWINGS AND PROCEDURES FOR THE EXCAVATION SUPPORT SYSTEM IN ACCORDANCE WITH STANDARD SPECIFICATION SUBSECTIONS 105.03 AND 204.01B. THE SUBMITTAL SHALL INCLUDE, BUT NOT BE LIMITED TO, SELECTION OF AN APPROPRIATE SYSTEM FOR THE ANTICIPATED SUBSURFACE CONDITIONS, COMPLETE STRUCTURAL DESIGN CALCULATIONS, WORKING DRAWINGS AND ALL APPLICABLE PROCEDURES.
3. THE CONTRACTOR IS NOTIFIED THAT COFFERDAM WITH TREMIE SEAL WILL BE REQUIRED DURING CONSTRUCTION OF PIER 1. APPROXIMATE LIMITS OF REQUIRED COFFERDAM AND SCHEMATIC DETAILS OF THE TREMIE SEAL HAVE BEEN SHOWN FOR BIDDING PURPOSES. THE COFFERDAM IS REQUIRED TO BE STEEL SHEET PILING.
4. THE CONTRACTOR SHALL SUBMIT WORKING DRAWINGS AND A SCHEDULE OF OPERATIONS FOR THE COFFERDAM IN ACCORDANCE WITH STANDARD SPECIFICATION SUBSECTIONS 105.03 AND 208.07. THE SUBMITTAL SHALL INCLUDE, BUT NOT BE LIMITED TO, SELECTION OF AN APPROPRIATE SYSTEM FOR THE ANTICIPATED SUBSURFACE CONDITIONS, COMPLETE STRUCTURAL DESIGN CALCULATIONS, INCLUDING TREMIE SEAL DESIGN, WORKING DRAWINGS AND ALL APPLICABLE PROCEDURES.

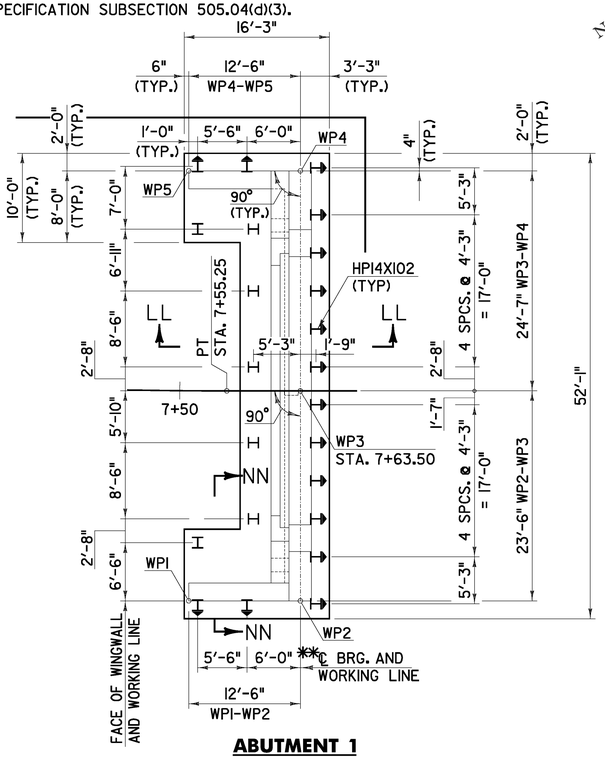


ABUTMENT 1

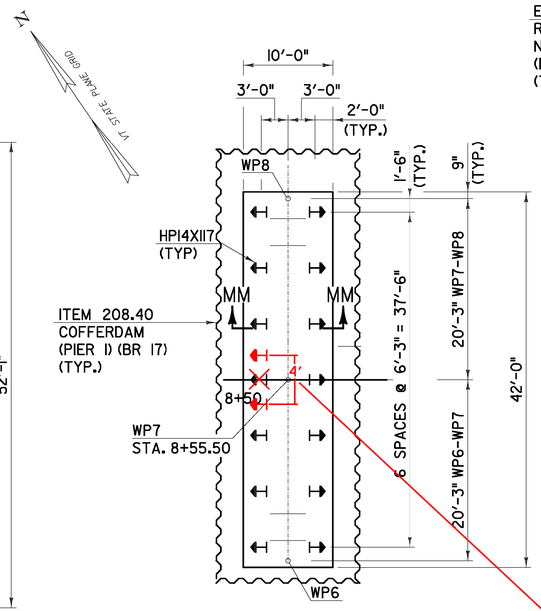


PIER 1

FOUNDATION PLAN
SCALE 1/8" = 1'-0
10 2 4 6 8

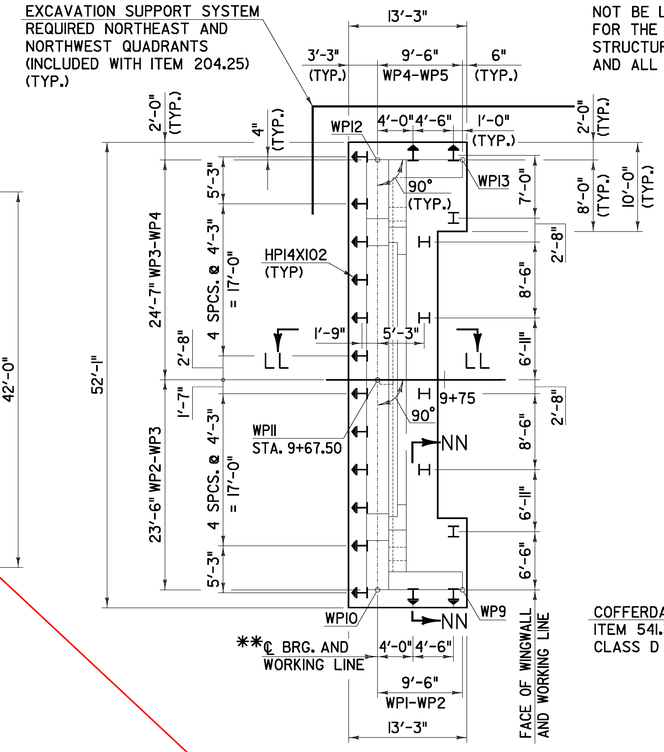


ABUTMENT 2

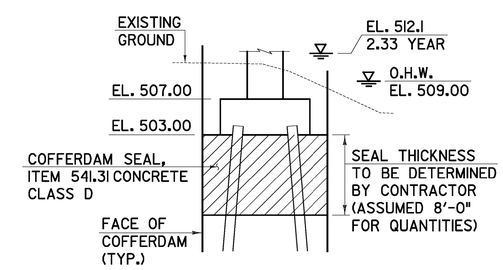


TREMIE SEAL DETAIL
NOT TO SCALE

COFFERDAM WHALE IN WAY OF CENTER PILE. PLACED ONE PILE ON EACH SIDE OF WHALER TO REPLACE MISSING PILE

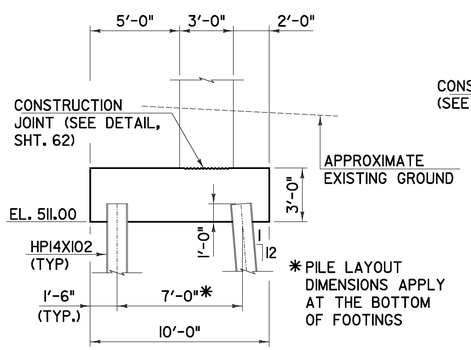


SECTION LL-LL
SCALE 1/4" = 1'-0
10 2 4 6 8

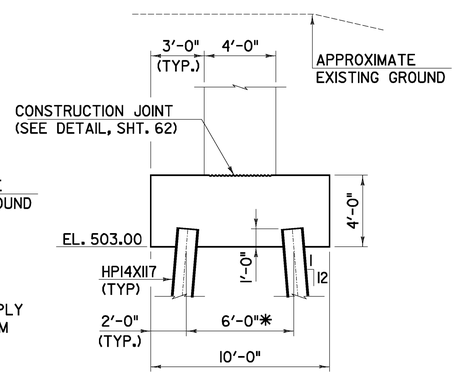


SECTION MM-MM
SCALE 1/4" = 1'-0
10 2 4 6 8

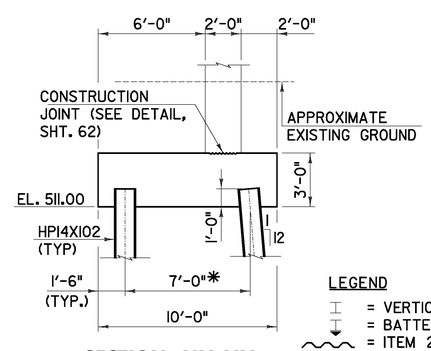


SECTION NN-NN
SCALE 1/4" = 1'-0
10 2 4 6 8

LEGEND

- = VERTICAL PILE
- = BATTERED PILE (1:12)
- = ITEM 208.40 COFFERDAM (PIER 1) (BR 17)
- = EXCAVATION SUPPORT SYSTEM (INCLUDED WITH ITEM 204.25)

**- SEE NOTE "A" SHT. 60.

CHA

| FOUNDATION PLAN | PROJECT NAME: RUTLAND CITY<br>PROJECT NUMBER: BRF 3000 (19) | |
|---|---|---|
| | PROJECT LEADER: M.D.S.<br>DESIGNED BY: D.M.D.<br>DWG. NO.: | PLOT DATE: 6/30/2014<br>DRAWN BY: D.M.D.<br>CHECKED BY: P.M.P.<br>SHEET 76 OF 245 |

FILE NAME = V:\Projects\VAN\K2\20615\CADD\MSTN\08_@96\consultants\x08_@96foundationplan.dgn
DATE/TIME = 6/30/2014
USER = 4916