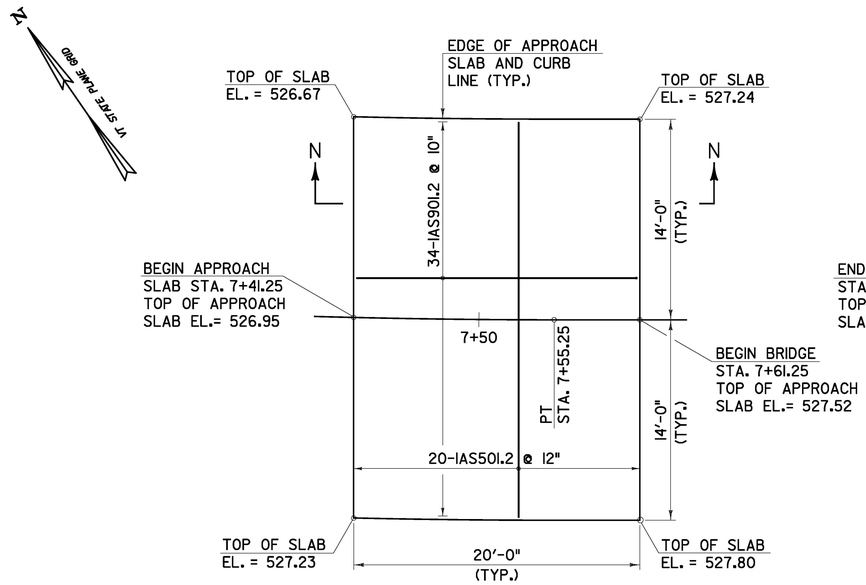

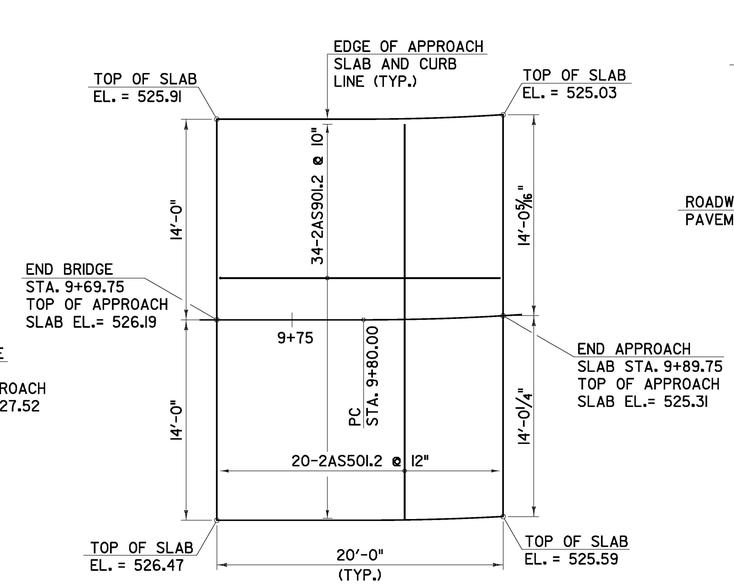

APPROACH SLAB PLAN

SCALE 1" = 5'-0"

5 0 5

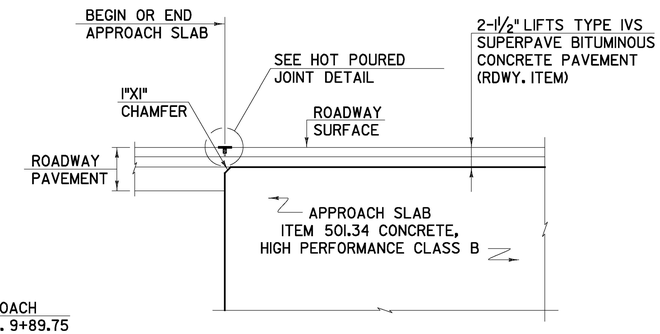

DETAIL FOR JOINT IN PAVEMENT AT END OF APPROACH SLAB

NOT TO SCALE

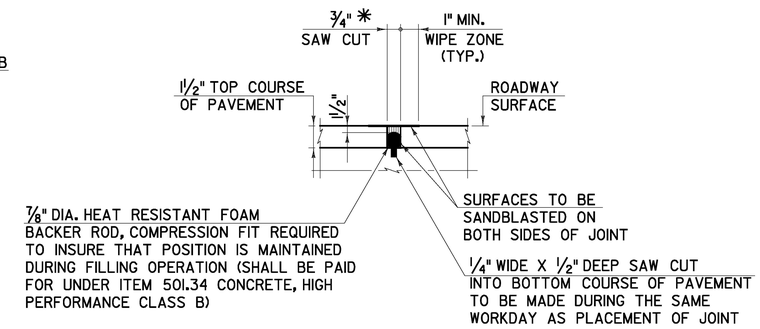

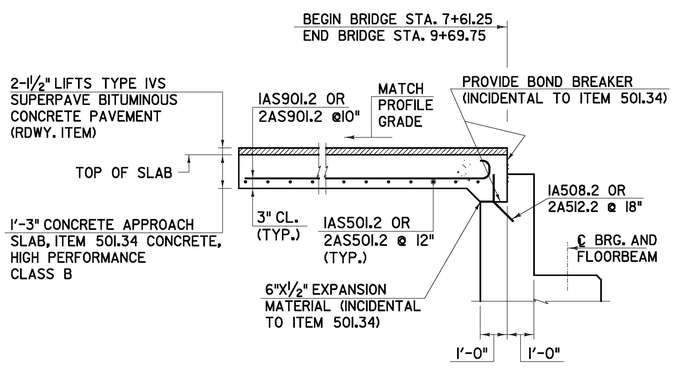

SECTION N-N

(ABUT. 1 SHOWN, ABUT. 2 SIMILAR)
SCALE 3/8" = 1'-0"

1 0 1 2 3 4

NOTES:

1. ALL APPROACH SLAB CONCRETE SHALL BE HIGH PERFORMANCE CLASS B AND SHALL BE PAID FOR UNDER ITEM 501.34 CONCRETE, HIGH PERFORMANCE CLASS B.
2. ALL APPROACH SLAB REINFORCING SHALL HAVE LEVEL II CORRISION PROTECTION AND SHALL BE PAID FOR UNDER ITEM 507.12 REINFORCING STEEL, LEVEL II.
3. APPROACH SLAB COVER SHALL BE 3" CL. UNLESS OTHERWISE SHOWN ON PLANS.

* JOINT IS TO BE LOCATED ACCURATELY BY STRING LINING, OR OTHER MEANS, PRIOR TO PAVING, SO THAT THE SAW CUTS WILL BE MADE DIRECTLY OVER THE END OF THE CONCRETE DECK. JOINT SHALL BE CUT DRY IN A SINGLE PASS AND BE SEALED WITHIN 24 HOURS OR PRIOR TO EXPOSURE TO TRAFFIC. JOINT SHALL BE CLEANED PRIOR TO APPLYING THE JOINT SEALER.

HOT POURED JOINT DETAIL

NOT TO SCALE

LEGEND

NF = NEAR FACE
FF = FAR FACE
EF = EACH FACE
▲ = CUT IN FIELD
EST = ESTIMATED QUANTITY

CHA

APPROACH SLAB DETAILS	PROJECT NAME: RUTLAND CITY PROJECT NUMBER: BRF 3000 (19)	
	PROJECT LEADER: M.D.S. DESIGNED BY: D.M.D. DWG. NO.:	PLOT DATE: 6/30/2014 DRAWN BY: D.M.D. CHECKED BY: P.M.P. SHEET 69 OF 245

FILE NAME = V:\Projects\ANY\K2\20515\CADD\MSTN\08_096\consultants\v08_096approachslab.dgn
DATE/TIME = 6/30/2014
USER = 4916