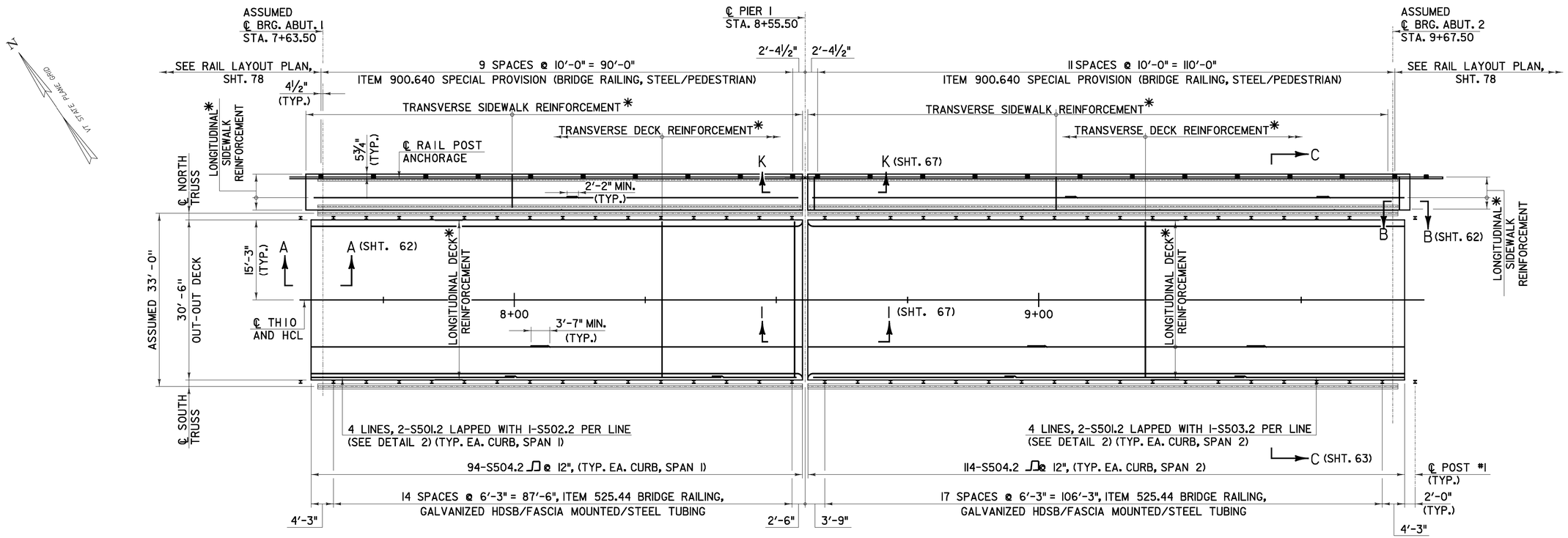

DECK REINFORCING PLAN

SCALE 1" = 10'-0"

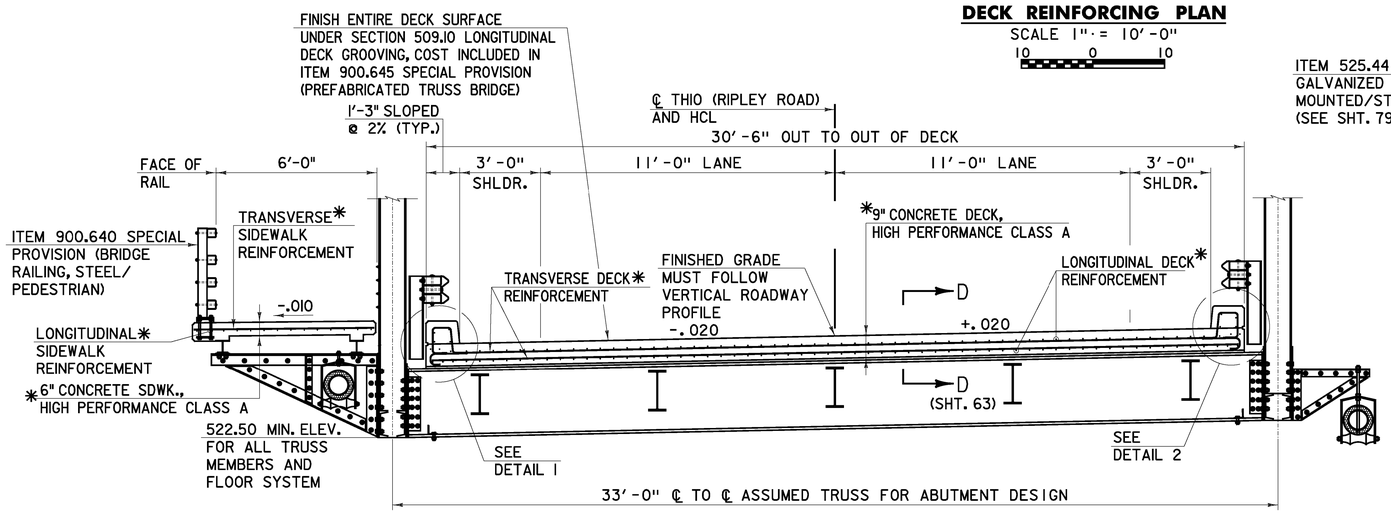

TYPICAL BRIDGE SECTION

SCALE ⅜" = 1'-0"

*-9" CONCRETE DECK AND 6" SIDEWALK THICKNESSES ASSUMED, REINFORCING TO BE DESIGNED BY CONTRACTOR. COST FOR CONCRETE AND REINFORCEMENT INCLUDED WITH ITEM 900.645 SPECIAL PROVISION (PREFABRICATED TRUSS BRIDGE). OTHER DECK SYSTEM MAY BE USED WITH PRIOR APPROVAL AS SPECIFIED IN ITEM 900.645 SPECIAL PROVISION (PREFABRICATED TRUSS BRIDGE).

SEE APPROVED TRUSS DRAWINGS FOR FINAL TRUSS CONFIGURATION AND DESIGN

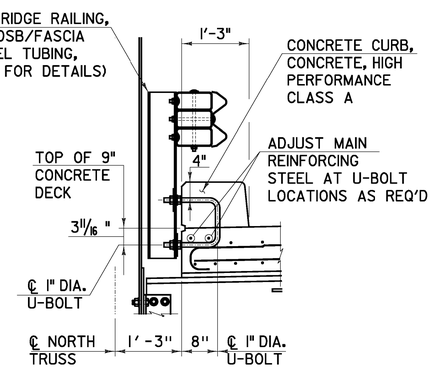

DETAIL 1

(N. FASCIA SHOWN, S. FASCIA SIMILAR)

SCALE ¾" = 1'-0"

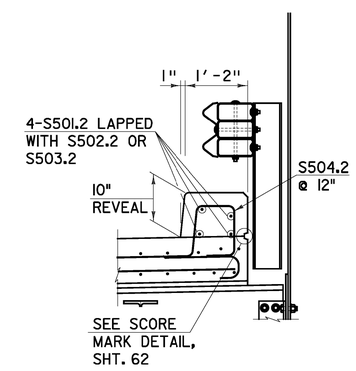

NOTE:
WORK DETAILS 1 AND 2 TOGETHER.

DETAIL 2

(S. FASCIA SHOWN, N. FASCIA SIMILAR)

SCALE ¾" = 1'-0"

LEGEND

NF = NEAR FACE
FF = FAR FACE
EF = EACH FACE
▲ = CUT IN FIELD
EST = ESTIMATED QUANTITY

CHA

DECK REINFORCING PLAN AND DETAILS	PROJECT NAME: RUTLAND CITY PROJECT NUMBER: BRF 3000 (19)	
	PROJECT LEADER: M.D.S. DESIGNED BY: D.M.D. DWG. NO.:	PLOT DATE: 6/30/2014 DRAWN BY: D.M.D. CHECKED BY: P.M.P. SHEET 61 OF 245

FILE NAME = V:\Projects\ANY\K2\20615\CADD\MSTN\08_@96\consultants\x08_@96deckplan.dgn
DATE/TIME = 6/30/2014
USER = 4916